# REPORT TO COUNCIL
# City of Sacramento

**915 I Street, Sacramento, CA 95814-2604**
**www. CityofSacramento.org**

**Consent**
**October 2, 2008**

**Honorable Mayor and**
**Members of the City Council**

**Title: Interstate 80 Bicycle/Pedestrian Bridge Project (PN: HC21/K15020000)**

**Location/Council District:** Interstate 80 at the West Canal. Location Map - Exhibit A of Resolution. (District 1)

**Recommendation:** Adopt a **Resolution**: 1) approving the preliminary design; 2) adopting the Mitigated Negative Declaration and approving the Mitigation Reporting Plan; 3) authorizing the City Manager to execute Supplemental Agreement No. 3 (2003-060) for an amount not to exceed $103,913 with URS Corporation; and 4) resetting the City Manager's approval authority.

**Contact:** Zuhair Amawi, Associate Civil Engineer, (916) 808-7620; Jon Blank, Supervising Engineer, (916) 808-7914

**Presenters:** None

**Department:** Transportation

**Division:** Engineering Services

**Organization No:** 15001131

**Description/Analysis**

**Issue:** The Interstate 80 Bicycle/Pedestrian Bridge is at 30% design. Adoption of the Mitigated Negative Declaration and Mitigation Reporting Plan, approval of the preliminary design, and Supplemental Agreement No. 3 with URS Corporation is necessary to move forward with final design of the project.

**Policy Considerations:** The action requested herein is consistent with the City's Strategic Plan to improve and diversify the transportation system, enhance and preserve the neighborhoods, and improve safety.

**Environmental Considerations:**

**California Environmental Quality Act (CEQA):**
A Mitigated Negative Declaration (MND) was prepared and circulated for public review. Four written comments were submitted, and are attached to this staff report. Three of the comment letters were technical in nature and do not comment on the adequacy of the environmental analysis.

The United States Fish and Wildlife Service and California State Department of Fish and Game (resource agencies) submitted a joint letter dated July 31, 2008. The letter provided background information regarding the Natomas Basin Habitat Conservation Plan (NBHCP) and discussed the mitigation identified in the MND for impacts to Swainson's Hawk habitat and the Giant Garter Snake.

Staff engaged in discussions with the resource agencies regarding the mitigation proposed and reached consensus on appropriate mitigation for impacts to Giant garter snake and Swainson's hawk habitat located outside of the NBHCP area. Additionally, based upon discussion with a Caltrans staff biologist, a revised mitigation measure for Sacramento Splittail has been provided. Updated mitigation measures are included in the Mitigation Reporting Program. Staff does not believe recirculation of the document will not be required due to any such changes.

In compliance with Section 15070(b)1 of the California Environmental Quality Act (CEQA) Guidelines, Environmental Planning Services (EPS) prepared the Mitigated Negative Declaration and Mitigation Monitoring Plan to mitigate potential environmental impacts. In accordance with Section 21081.6 of the California Public Resource Code, a Mitigation Monitoring Program must be developed for implementing mitigation measures as identified in the Initial Studies. Subject to potential modification of mitigation as a result of discussions with the resource agencies, EPS has determined that there is no substantial evidence that the project, with the adoption of the mitigation measures identified in the Initial Studies, will have a significant effect on the environment.

**Sustainability Considerations:** This Project is consistent with the City's Sustainability Master Plan. It conforms with the Air Quality Focus Area by improving and optimizing transportation infrastructure.

**Commission/Committee:** None

**Rationale for Recommendation:** The Interstate 80 Bicycle/Pedestrian Bridge is at 30% design. Adoption of the Mitigated Negative Declaration and approval of the Mitigation Reporting Plan, preliminary design, and Supplemental Agreement No. 3 will allow the City to move forward with the final design.

**Financial Considerations:** The estimated total project cost is $6.48 million. The current budget is $1,526,500 which consists of $181,238 in Transportation Development Act (TDA) matching funds, $964,262 in Federal Capital Grant Development Act funds and $381,000 in Congestion Mitigation and Air Quality (CMAQ) funds. As of August 25, 2008, the project has an unobligated balance of $243,976 which is sufficient to execute the supplemental in the amount not to exceed $103,913 with URS Corporation and complete the design.

To close the funding gap of $4,957,000 for right of way and construction, the City will receive additional funds from Federal CMAQ and TDA matching funds. These funds are to be appropriated to the project at a future date.

**Emerging Small Business Development (ESBD):** This project includes federal funds and requires conformance with project participation guidelines for DBE in lieu of City of Sacramento ESBE program requirements. As required by federal law, Caltrans has established a statewide overall DBE goal. Caltrans is tracking DBE participation on all Federal-aid Contracts. Currently, the City has no DBE Availability Advisory for this project and the Consultant is not required by law to comply with DBE project participation requirements.

Respectfully Submitted by: _____
Nicholas Theocharides
Engineering Services Manager

Approved by: _____
Jerry Way
Director of Transportation

Recommendation Approved:

_____
Ray Kerridge
City Manager

**Table of Contents:**


| | | |
|---|---|---|
| | Report | Pg 1 |
| **Attachments** | | |
| **1** | Background | Pg 5 |
| **2** | Resolution | Pg 8 |
| | Exhibit A - Location Map | Pg 10 |
| | Exhibit B - Preliminary Design Plan | Pg 11 |
| | Exhibit C - Comment Letters | Pg 15 |
| | Exhibit D - Mitigation Reporting Plan | Pg 27 |
| | Exhibit E - Mitigated Negative Declaration | Pg 38 |

**Attachment 1**

## Background

The project will construct a bicycle/pedestrian bridge crossing over Interstate 80 at the West Canal and a bike trail along the East Main Drain Canal.

On April 29, 2003, the City entered into a consultant services agreement with URS Corporation for the design of the project in the amount of $620,824. Design of the project was suspended due to negotiations with Caltrans over disputed Caltrans requirements of adding an auxiliary lane to Interstate 80 as a part of this project at the expense of the City. Caltrans is currently in the process of adding High occupancy Vehicle (HOV) and auxiliary lanes on Interstate 80 which will require adjustments to the design of the bicycle/pedestrian bridge.

Supplemental Agreement No. 1 extended the agreement with URS to May 23, 2010. Supplemental Agreement No. 2 in the amount of $59,998 provided for the completion of the environmental document. Supplemental Agreement No. 3 in the amount of $103,913 will compensate URS Corporation increased costs associated with design changes due to the suspension of the project. The project is at 30% design.

The City of Sacramento's Environmental Planning Services conducted or caused to be conducted an initial study on the Interstate 80 bicycle/pedestrian bridge Project to determine if the Project may have a significant effect on the environment. The initial study and Mitigated Negative Declaration was released on July 2, 2008 for a 30-day review period.

The adoption of the Mitigated Negative Declarations and the approval of the Mitigation Reporting Plan are required to comply with the California Environmental Quality Act and will allow staff to move forward with completion of the final design.

Four written comments were received. Three of the comment letters do not comment on the adequacy of the environmental analysis.

The United States Fish and Wildlife Service and California State Department of Fish and Game (resource agencies) submitted a joint letter. The letter provided background information regarding the Natomas Basin Habitat Conservation Plan (NBHCP) and discussed the mitigation identified in the MND for impacts to Swainson's Hawk habitat and the Giant Garter Snake.

Revisions to the mitigation measures V.B.5b, BIO-6, and Bio-8 addressing impacts to Swainson's hawk foraging and giant garter snake upland habitats and Sacramento splittail have been included to provide more effective protection of these special status species' habitat. These changes made were as follows:

**BIO-6: Compensate for the temporary and permanent loss of GGS habitat**

Approximately 1.08 acres of upland GGS habitat and 0.23 acres of aquatic habitat will be temporarily affected by construction activities. Approximately 0.66 acres of upland habitat will be permanently lost as a result of construction activities. The project will compensate for permanent loss of GGS habitat at ratio of 3:1. Temporary habitat loss will be mitigated by restoration for one (1) season of disturbance; restoration plus 1:1 replacement for two (2) seasons of disturbance; or 3:1 replacement (or restoration plus 2:1 replacement) for more than two seasons, and shall be approved by and occur at a location acceptable to the U.S Fish and Wildlife Service and California Department of Fish and Game.

Restoration of GGS habitat within the project area pursuant to "Guidelines for Restoration and/or Replacement of Giant Garter Snake Habitat" or other methods agreeable to the agencies identified in the Biological Opinion and agreeable to RD1000 will be undertaken.

**BIO-8 Remove Fish From the Isolated Cofferdam Area**

The City will ensure that a fish biologist is on site prior to dewatering to implement a fish rescue operation in the isolated area between the cofferdams that may harbor stranded fish. Exclusion and rescue protocols outlined by DFG will be implemented. Fish shall be removed from the isolated area with a dip net. At least one person of the fish rescue team will have a 4-year college degree in fisheries or biology, or related degree. The person must also have at least 2 years of professional experience in fisheries field surveys. All fish will be released downstream of the project area. If any listed fish such as steelhead are recovered, NMFS and DFG will be notified immediately and construction activities will cease until the agencies and the City have decided on appropriate actions.

**HCP Mitigation Measure V.B.5b: Measures to reduce take of Swainson's hawk**

Staff will implement the following measures to reduce nest disturbance taken from the NBHCP:

1. Prior to the commencement of development activities, a preconstruction survey for nesting Swainson's Hawks will be conducted within 0.5 mile of the project area. These surveys shall be conducted according to the Swainson's Hawk Technical Advisory Committee's (May 31, 2000) methodology or updated methodologies, as approved by the Service and CDFG, using experienced Swainson's Hawk surveyors.

2. If breeding Swainson's Hawk are identified, no new disturbances (e.g., heavy equipment operation associated with construction) will occur within 0.5 mile of an active nest between March 15 and September 15, or until a qualified biologist, with concurrence by DFG, has determined that young have fledged or that the nest is no longer occupied. If the active nest is located within 0.25 mile) of existing urban development, the new disturbance zone can be limited to 0.25 mile versus 0.5 mile. .
3. Prior to ground disturbance, compensation for the loss temporary loss of 1.58 acres and permanent loss of 0.66 acres of foraging will be undertaken at a ratio of 1:1, and shall be approved by and occur at a location acceptable to the U.S. Fish and Wildlife Service and California Department of Fish and Game.

   The above measures will apply to all of the project area. However, for the portion of this project outside of the HCP area, the City will consult directly with DFG for their concurrence with this approach and to determine whether additional permits (e.g., incidental take permit under Section 2081 of CESA) are required.

Staff engaged in discussions with the resource agencies regarding the mitigation proposed and reached consensus on appropriate mitigation for impacts to Giant garter snake and Swainson's Hawk habitat located outside of the NBHCP area. Updated mitigation measures are included in the Mitigation Monitoring Program. Staff does not believe recirculation of the document will be required due to any such changes

**Attachment 2**

# RESOLUTION NO.

Adopted by the Sacramento City Council

## INTERSTATE 80 BICYCLE/PEDESTRIAN BRIDGE PROJECT (K15020000)

**BACKGROUND**

A. The project will construct a bicycle/pedestrian bridge crossing over Interstate 80 at the West Canal and a bike trail along the East Main Drain Canal.

B Supplemental Agreement No. 3 will compensate URS Corporation for revising the design and increased costs due to the suspension of the project.

C. A Notice of Availability/Intent to Adopt the Mitigated Negative Declaration was released on July 2, 2008 for a 30-day review period. Comment letters were received. Based upon comments received from United States Fish and Wildlife Service and California Department of Fish and Game, a trustee agency, revisions to mitigation measures have been made to the mitigated negative declaration and initial study pursuant to CEQA Guidelines Section 15074.1. Revisions to the mitigation measures addressing impacts to Swainson's hawk foraging and giant garter snake (GGS) upland habitats and Sacramento Splittail have been included to provide more effective protection of these special status species' habitat. Compensation for temporary and permanent loss of GGS habitat and Habitat Conservation Plan (HCP) mitigation measures to reduce take of Swainson's Hawk have been provided in the mitigation reporting plans.

D. Additions were made to the initial study based upon comments received during the public review period. Revisions were made pursuant to CEQA Guidelines Section 15073.5(c)(1)(4), which consisted of more effective mitigation measures, and revisions that merely clarifiies the information contained in the mitigated negative declaration and initial study. Recirculation of the mitigated negative declaration is not required.

E. The Mitigated Negative Declarations reflect the lead agency independent judgment and analysis and that there is no substantial evidence that the project will have a significant effect on the environment.

**BASED ON THE FACTS SET FORTH IN THE BACKGROUND, THE CITY COUNCIL RESOLVES AS FOLLOWS:**

Section 1. The preliminary design plan for the project is approved.

Section 2. The Mitigated Negative Declaration is adopted, and the Mitigated Reporting Plans is approved for the Interstate 80 Bicycle/Pedestrian Bridge Project (K15020000).

Section 3. Based on its review of the MND and on the basis of the whole record, the City Council finds that the MND reflects the City Council's independent judgment and analysis and that there is no substantial evidence that the Project will have a significant effect on the environment.

Section 4. Upon approval of the Project, the City's Environmental Planning Services shall file or cause to be filed a Notice of Determination with the Sacramento County Clerk and, if the project requires a discretionary approval from any state agency, with the State Office of Planning and Research, pursuant to section 21152(a) of the Public Resources Code and section 15075 of the State EIR Guidelines adopted pursuant thereto.

Section 5. The City Manager is authorized to execute Supplemental Agreement No. 3 with URS Corporation in the amount not to exceed $103,913 for the Interstate 80 Bicycle Pedestrian Bridge Project (K15020000).

Section 6. The Budget Manager is authorized to appropriate $381,000 in additional federal right of way funds upon receipt of an Authorization to Proceed (E-76)

Section 7. The 2008/2009 CIP is amended by transferring $50,000 from the TDA Federal, State Match Program (K19000400) to the Interstate 80 Bicycle/Pedestrian Project.

Section 8. The City Manager's approval authority is reset.

**Table of Contents**:

Exhibit A: Map of Interstate 80 Bicycle/Pedestrian Bridge (K15020000)
Exhibit B: Preliminary Design Plan – 1 page
Exhibit C: Comment Letter
Exhibit D: Mitigation Reporting Plan
Exhibit E: Mitigated Negative Declaration

**Exhibit A**

Location map for:

# INTERSTATE 80 BICYCLE/PEDESTRIAN BRIDGE PROJECT (PN: K15020000)

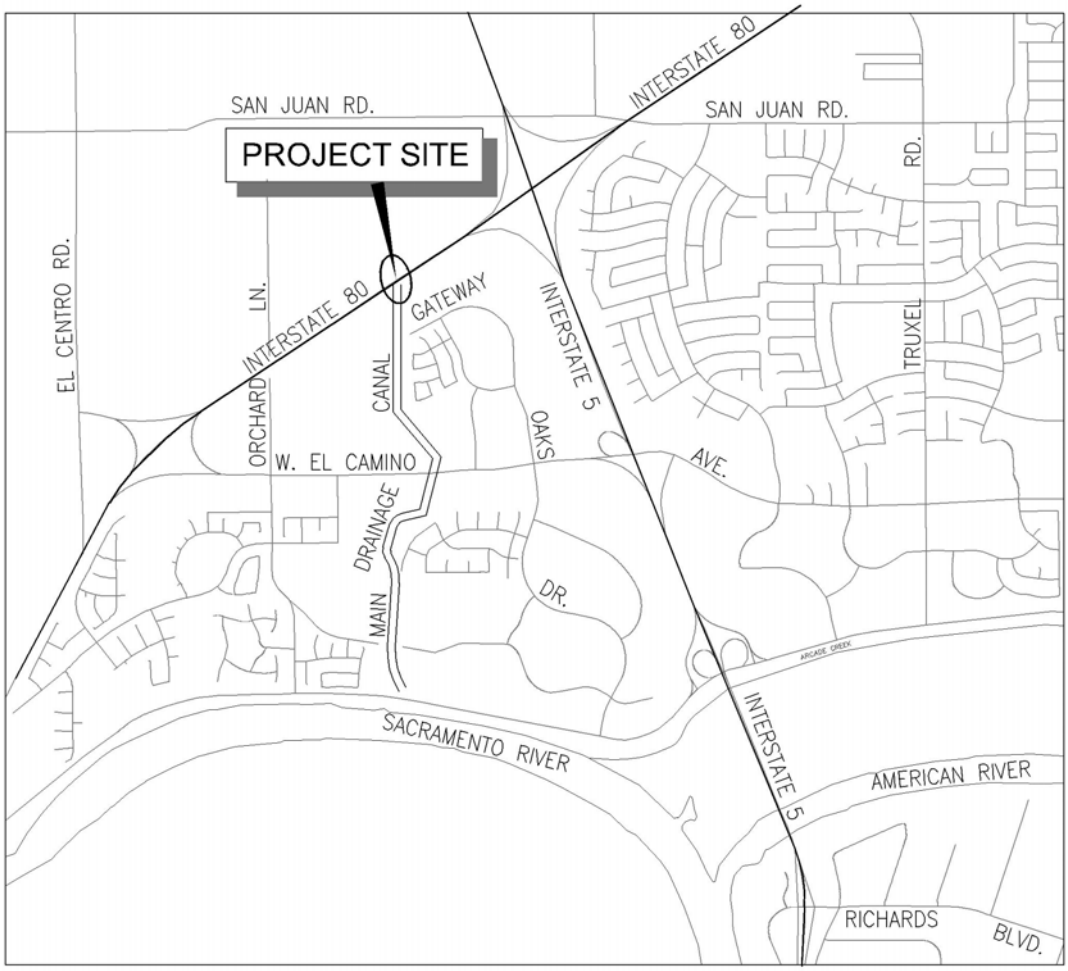


Map Contact: Boris Kiksman
Date: June 2008

0 2000 4000 6000 8000

**Exhibit B**

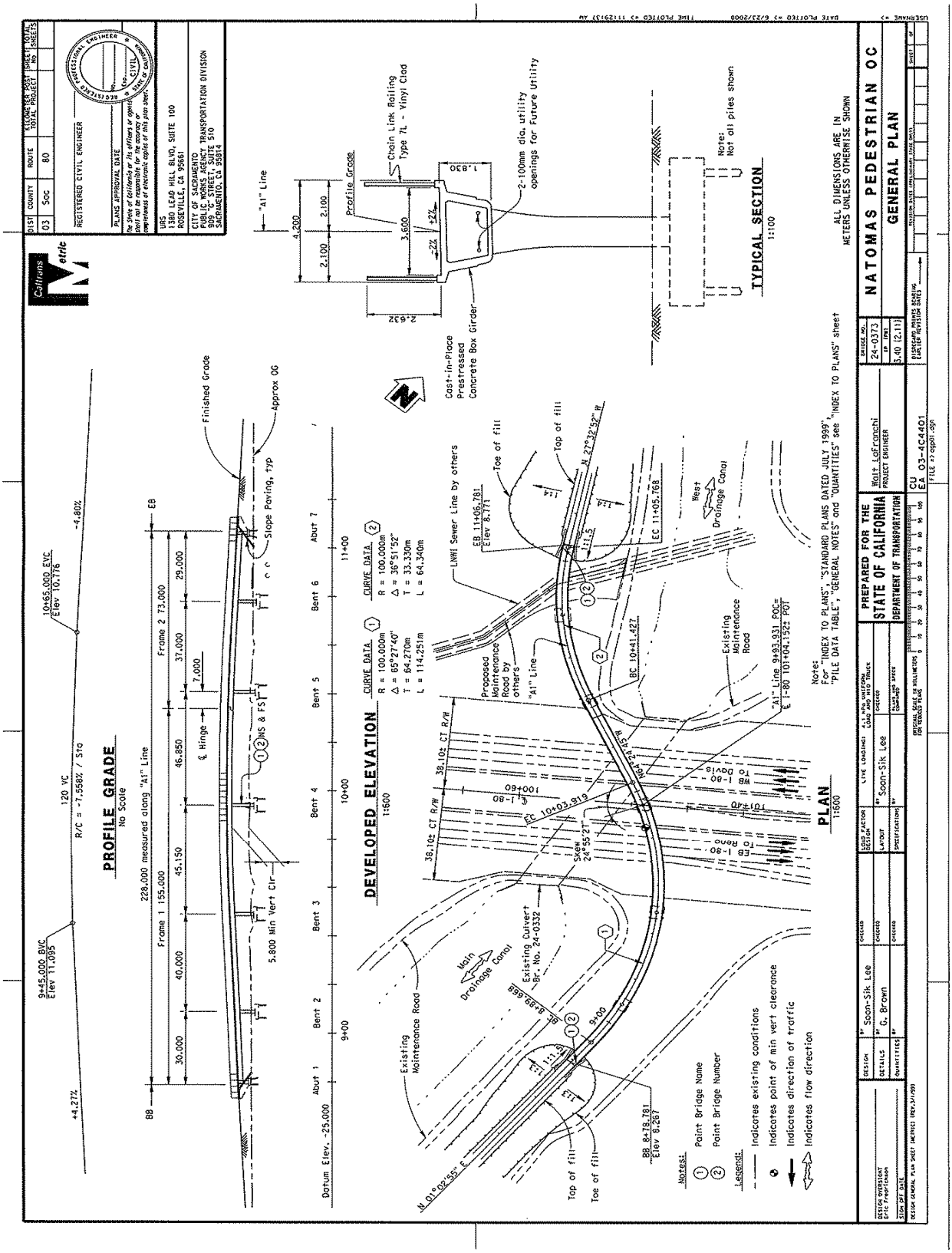
PROFILE GRADE
No Scale
DEVELOPED ELEVATION
1:600
PLAN
1:600
TYPICAL SECTION
1:100
NATOMAS PEDESTRIAN OC
GENERAL PLAN
STATE OF CALIFORNIA
DEPARTMENT OF TRANSPORTATION
Existing Maintenance Road
Main Drainage Canal
Existing Culvert Br. No. 24-0332
Proposed Maintenance Road by others
LNWI Sewer Line by others
Cast-in-Place Prestressed Concrete Box Girder
Chain Link Railing Type 7L - Vinyl Clad
2-100mm dia. utility openings for Future Utility
Note: Not all piles shown
ALL DIMENSIONS ARE IN METERS UNLESS OTHERWISE SHOWN
Notes:
① Point Bridge Name
② Point Bridge Number
Legend:
Indicates existing conditions
Indicates point of min vert clearance
Indicates direction of traffic
Indicates flow direction

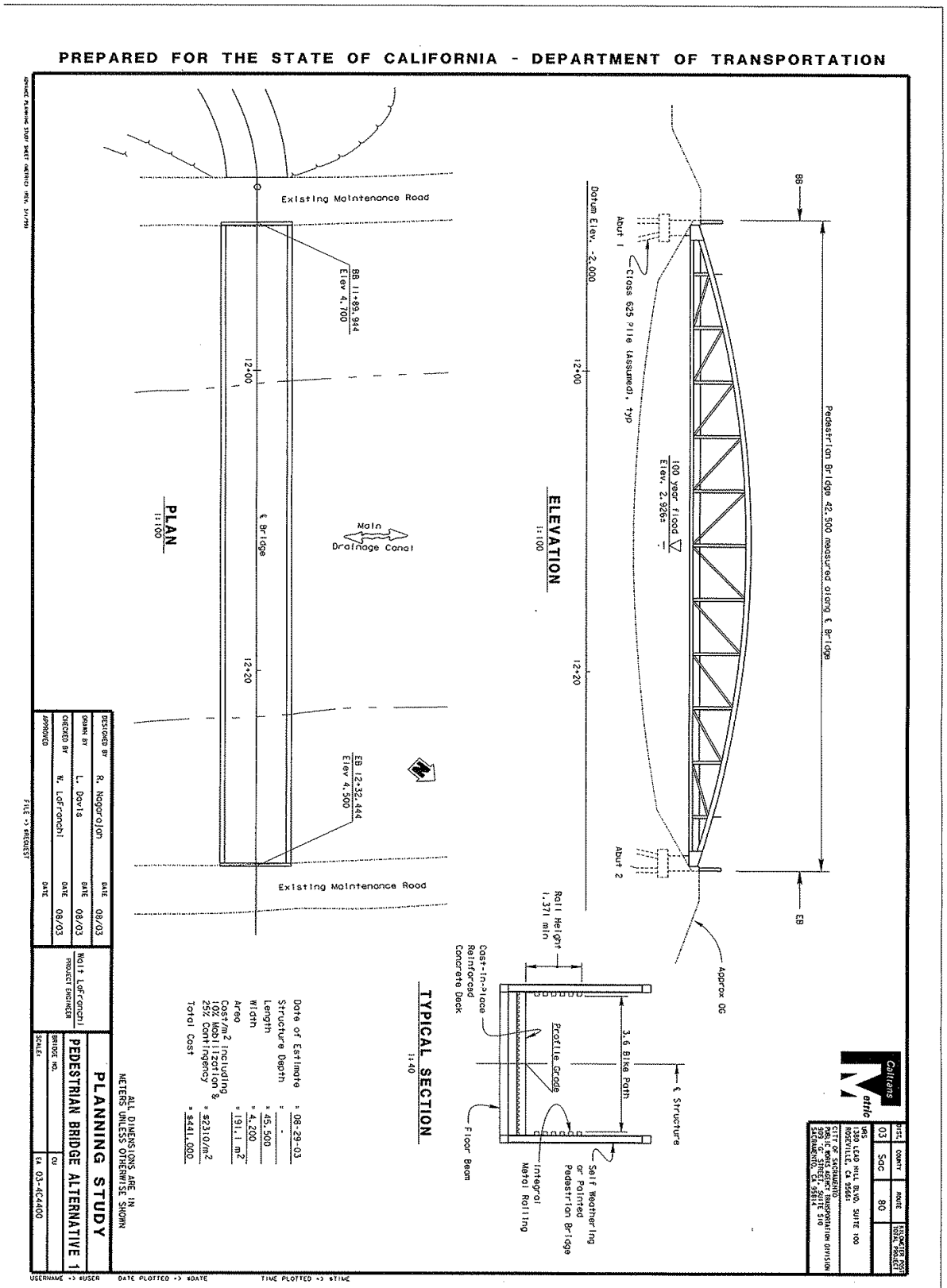
PREPARED FOR THE STATE OF CALIFORNIA - DEPARTMENT OF TRANSPORTATION
Pedestrian Bridge 42.500 measured along ℄ Bridge
BB
EB
Approx 06
Abut 1
Abut 2
Cross 625 Pile (assumed), typ
100 year flood
Elev. 2.926±
Datum Elev. -2.000
12+00
12+20
ELEVATION
1:100
Existing Maintenance Road
BB 11+89.944
Elev 4.700
EB 12+32.444
Elev 4.500
Main
Drainage Canal
℄ Bridge
PLAN
1:100
Rail Height
1.371 min
3.6 Bike Path
℄ Structure
Cast-in-place
Reinforced
Concrete Deck
Profile Grade
Floor Beam
Self Weathering
or Painted
Pedestrian Bridge
Integral
Metal Railing
TYPICAL SECTION
1:40
Date of Estimate = 08-29-03
Structure Depth = -
Length = 45.500
Width = 4.200
Area = 191.1 m²
Cost/m² including
10% Mobilization &
25% Contingency = $2310/m²
Total Cost = $441.000
ALL DIMENSIONS ARE IN
METERS UNLESS OTHERWISE SHOWN
DESIGNED BY R. Nagarajan DATE 08/03
DRAWN BY L. Davis DATE 08/03
CHECKED BY W. LoFranchi DATE 08/03
APPROVED DATE
Wolf LoFranchi
PROJECT ENGINEER
PLANNING STUDY
PEDESTRIAN BRIDGE ALTERNATIVE 1
BRIDGE NO.
SCALE:
CU
EA 03-4G4400
Caltrans
Mattie
DIST. 03
COUNTY Sac
ROUTE 80
PROJECT NO. TOTAL PROJECT
1985 TOWNSEND HILL BLVD. SUITE 100
FOLSOM, CA 95630
CITY OF SACRAMENTO
PUBLIC WORKS AGENCY TRANSPORTATION DIVISION
915 "I" STREET - SUITE 510
SACRAMENTO, CA 95814
USERNAME -> $USER
DATE PLOTTED -> $DATE
TIME PLOTTED -> $TIME
FILE -> $REQUEST

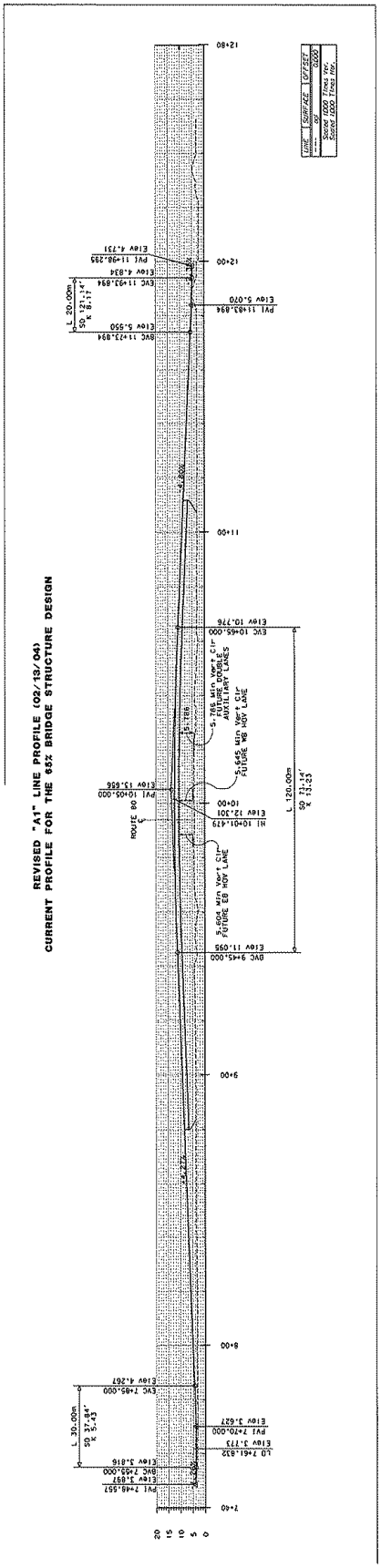
REVISED "A1" LINE PROFILE (02/13/04)
CURRENT PROFILE FOR THE 65% BRIDGE STRUCTURE DESIGN

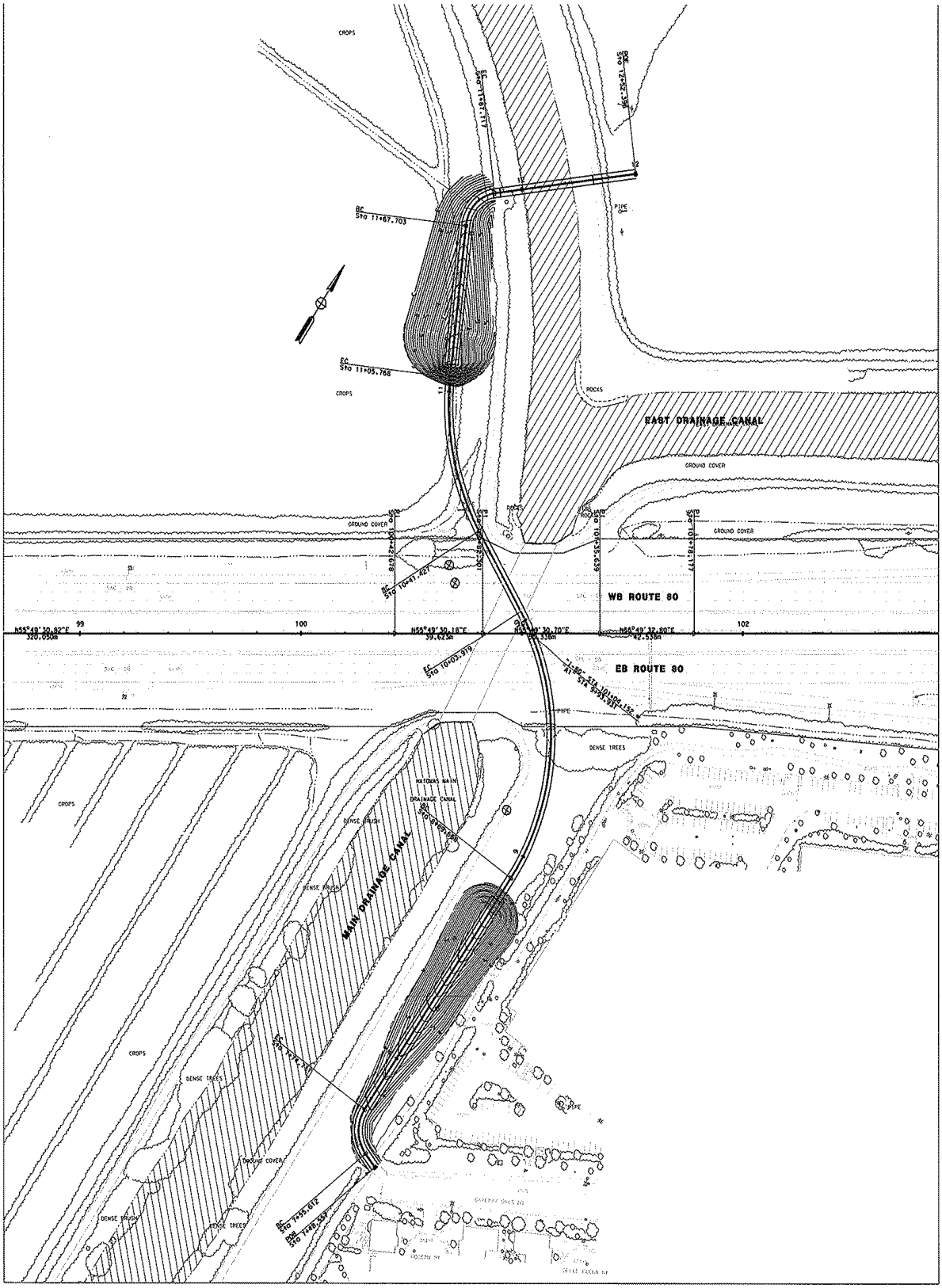
CROPS
EAST DRAINAGE CANAL
GROUND COVER
WB ROUTE 80
EB ROUTE 80
DENSE TREES
MAIN DRAINAGE CANAL
DENSE BRUSH

**Exhibit C**

SACRAMENTO AREA
SEWER DISTRICT
SERVING YOU 24/7

July 25, 2008
E225.000

Scott Johnson
Development Services Department
City of Sacramento, Planning Division
300 Richards Boulevard, 3rd Floor
Sacramento, CA 95811

**Subject:** **Notice of Availability/Intent to Approve a Draft Mitigated Negative Declaration for the Interstate 80 (I-80) Bicycle and Pedestrian Overcrossing Project (CIP # HC21)**

**Board of Directors**
Representing:

County of Sacramento
City of Citrus Heights
City of Elk Grove
City of Folsom
City of Rancho Cordova
City of Sacramento

Mary K. Snyder
*District Engineer*

Christoph Dobson
*Collection System Manager*

Wendell H. Kido
*District Manager*

Marcia Maurer
*Chief Financial Officer*

Dear Mr. Johnson:

Sacramento Area Sewer District (District, formerly CSD-1) has reviewed the Notice of Availability/Intent to Approve a Draft Mitigated Negative Declaration for the subject project.

It is noted that the City of Sacramento proposes to construct a pedestrian/bicycle overcrossing (POC) over Interstate 80, located within the northwestern area of the City of Sacramento, in Sacramento County, adjacent to the Natomas Main Drainage Canal where the Natomas West and Natomas East Drainage Canals merge.

The District does not have any specific concerns. We expect that if the project is subject to currently established policies, ordinances, fees, and to conditions of approval that we will propose after review of entitlement application documents, then mitigation measures within the EIR will adequately address the sewage aspects of the project and we anticipate a less than significant impact to the sewage facilities.

If you have any questions regarding these comments, please call Amandeep Singh at 876-6296 or myself at 876-6094.

Sincerely,

Salam Khan, P.E.
Sacramento Area Sewer District
Development Services

10545 Armstrong Avenue
Mather, California 95655
Tel 916.876.6000
Fax 916.876.6160
www.sacsewer.com

SK/CJ:clm

cc: File

Johnson072508.ltr

*Formerly County Sanitation District 1*

SRCSD

Wastewater Treatment

10545 Armstrong Avenue
Mather, CA 95655
Tele: [916] 876-6000
Fax: [916] 876-6160
Website: www.srcsd.com

**Board of Directors**
Representing:

County of Sacramento
County of Yolo
City of Citrus Heights
City of Elk Grove
City of Folsom
City of Rancho Cordova
City of Sacramento
City of West Sacramento

Mary K. Snyder
*District Engineer*
Stan R. Dean
*Plant Manager*
Wendell H. Kido
*District Manager*
Marcia Maurer
*Chief Financial Officer*

July 28, 2008

Scott Johnson
City of Sacramento
Development Services Department
300 Richards Blvd., 3rd Floor
Sacramento, CA 95811

Dear Mr. Johnson:

**Subject: Notice of Availability/Intent to Approve – Draft Mitigated Negative Declaration for the Interstate 80 (I-80) Bicycle and Pedestrian Overcrossing Project (CIP #HC21)**

Sacramento Regional County Sanitation District has reviewed the subject document and has the following comments:

The City of Sacramento (City) is proposing to construct a pedestrian/bicycle overcrossing (POC) over I-80 adjacent to the Natomas Main Drainage Canal where the Natomas West and Natomas East Drainage canals merge. The City also proposes to construct an at-grade level bridge (Canal Bridge) across the West Drainage Canal to link the north end of the POC with the existing trail. The project will also consist of all railings and fencing, grading, paving and slope section, supported by two cast-in-place concrete abutments and five cast-in-place concrete columns on driven piles.

**SRCSD Comments:**

**Page 1-2: Section 1.3, Project Description**
Please change "Regional Sanitation District" to "Sacramento Regional County Sanitation District."

**Pages 1-3, 1-4, 1-5: Section 1.3, Project Description**
SRCSD has the dual 60-inch Natomas Force Main and permanent easement within the project area. Per Figure 1.1.3, embankments, footings, and proposed construction staging areas are located over SRCSD's existing permanent easement and the Natomas Force Main.

It is stated that "The design of the POC footings has been developed in consideration of the LNWI sewer, which will cross the West Drainage Canal in the project vicinity," and that "Bridge embankments will be stabilized with 1:4 slopes. These embankments will be mechanically placed and compacted to be permanently stable." A loading study shall be required to prevent conflicts and assure the Natomas Force Main be protected in place. Based on the loading study, the footings and embankment may be required to be redesigned or modified. Close coordination efforts shall be required between

Mr. Scott Johnson
July 28, 2008
Page 2

SRCSD and the City throughout design and construction of the proposed project. SRCSD shall require review and approval for any proposed use that may have potential impacts to its facility.

**Page 2.1-8: Section 2.1.2.2, Affected Environment, Sewer System**
Please revise "Regional Plant" to "Sacramento Regional Wastewater Treatment Plant." The SRWTP treats on average 165 million gallons of waterwater per day (mgd), and is capable of treating up to 400 mgd during peak wet weather flow.

If you have any questions regarding this letter, please feel free to contact me at (916) 876-5608, or by e-mail at obonel@sacsewer.com. Attached for your reference are the as-builts for the Lower Northwest Interceptor – Natomas Force Main.

Sincerely,

Elizabeth Obon
Sacramento Regional County Sanitation District

EO:eo (eo)

Attachment: Lower Northwest Interceptor – Natomas Force Main Plan and Profile Sheet C18
Permanent Access Road Details – Sheet C40
Carrier in Casing Details – Sheet C41

cc: SRCSD Development Services
SASD Development Services
Sue Xiong (99-003)

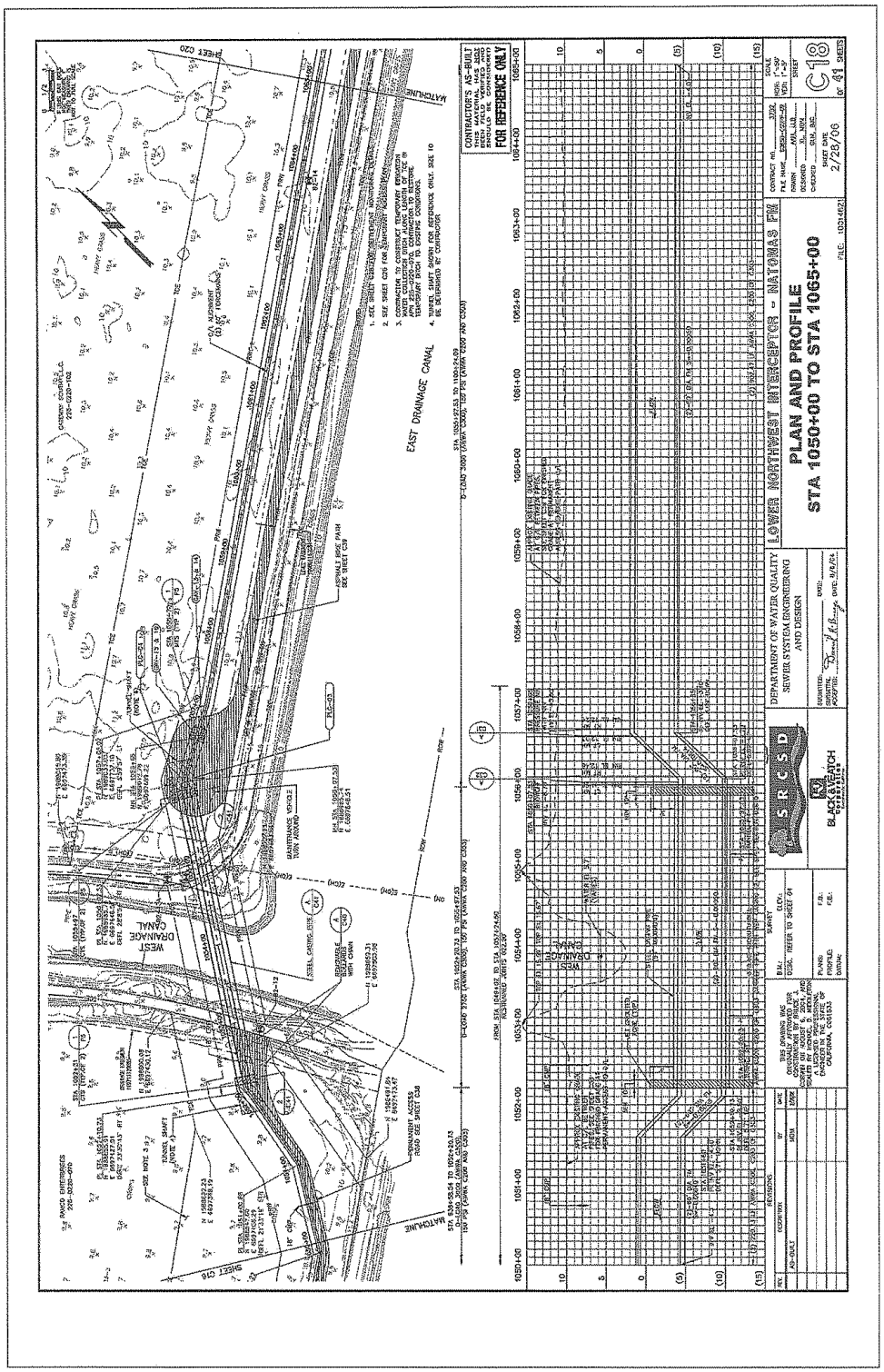
EAST DRAINAGE CANAL
WEST DRAINAGE CANAL
FOR REFERENCE ONLY
PLAN AND PROFILE
STA 1050+00 TO STA 1065+00
LOWER NORTHWEST INTERCEPTOR - NATOMAS FM
DEPARTMENT OF WATER QUALITY
SEWER SYSTEM ENGINEERING AND DESIGN
S R C S D
C10

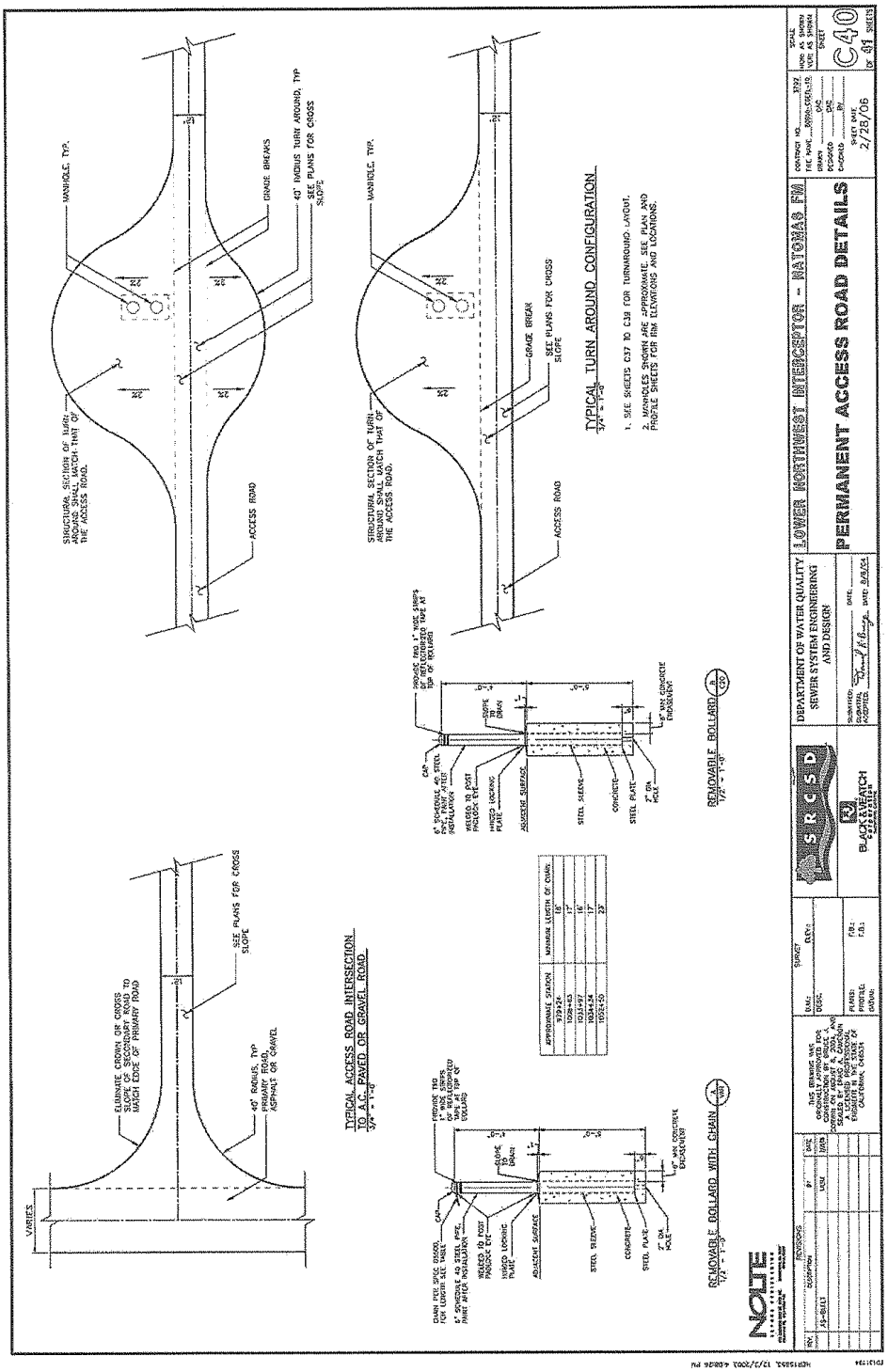
TYPICAL ACCESS ROAD INTERSECTION TO A.C. PAVED OR GRAVEL ROAD
TYPICAL TURN AROUND CONFIGURATION
REMOVABLE BOLLARD WITH CHAIN
REMOVABLE BOLLARD
LOWER NORTHWEST INTERCEPTOR - NATOMAS FM
PERMANENT ACCESS ROAD DETAILS
DEPARTMENT OF WATER QUALITY SEWER SYSTEM ENGINEERING AND DESIGN
C40

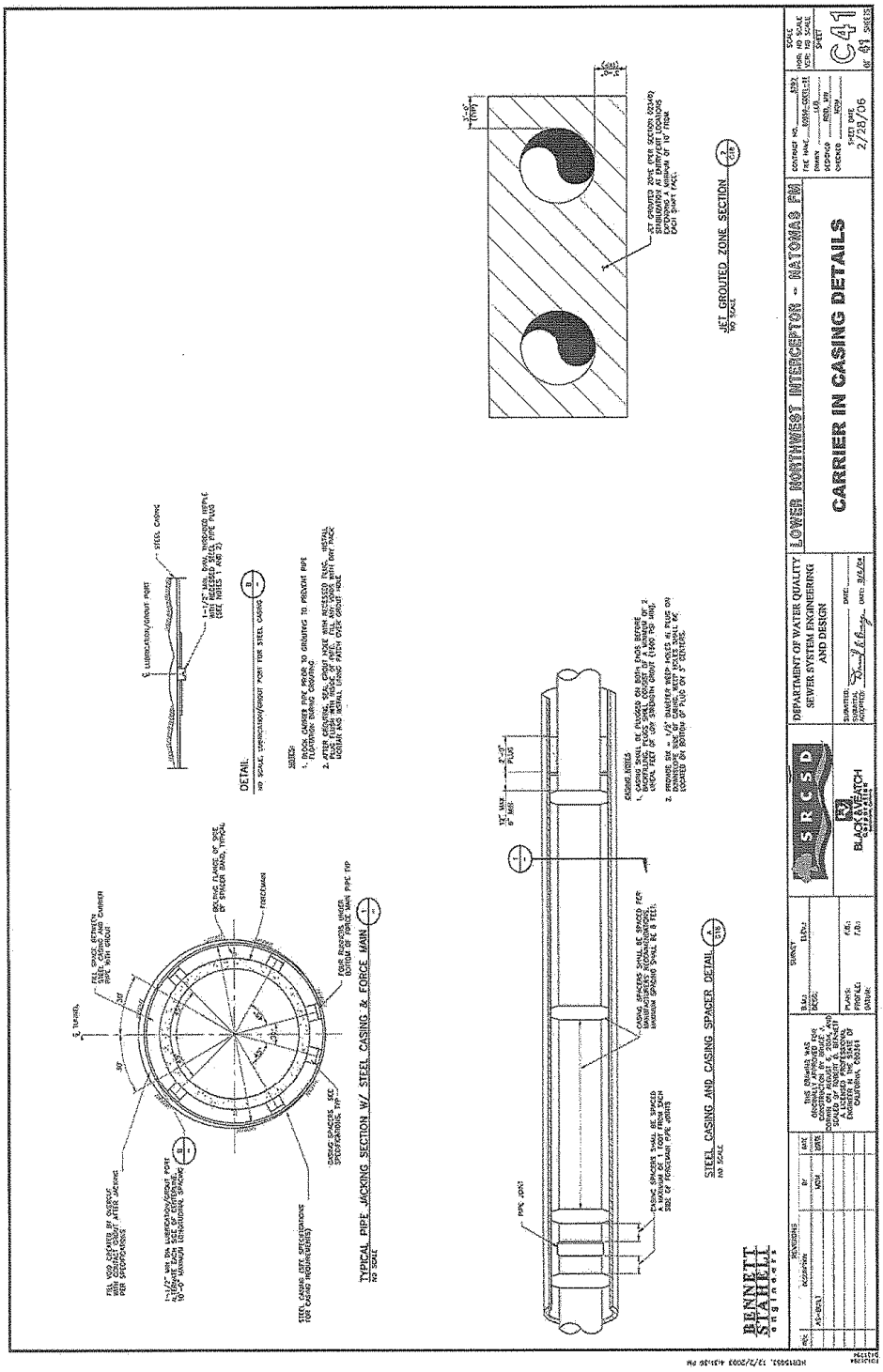
TYPICAL PIPE JACKING SECTION W/ STEEL CASING & FORCE MAIN
NO SCALE
DETAIL
NO SCALE
STEEL CASING AND CASING SPACER DETAIL
NO SCALE
JET GROUTED ZONE SECTION
NO SCALE
LOWER NORTHWEST INTERCEPTOR - NATOMAS PM
CARRIER IN CASING DETAILS
DEPARTMENT OF WATER QUALITY
SEWER SYSTEM ENGINEERING
AND DESIGN
S R C S D
BLACK & VEATCH
CORPORATION
BENNETT
STAHELI
engineers
C41

US Fish & Wildlife Service
Sacramento Fish and Wildlife Office
2800 Cottage Way, Room W-2605
Sacramento, CA 95825
(916) 414-6600
FAX (916) 414-6712

Department of Fish and Game
Sacramento Valley-Central
Sierra Region
1701 Nimbus Road, Suite A
Rancho Cordova, CA 95670
FAX (916) 358-2912

Service File # 81420-2008-TA-1688-1

JUL 31 2008

Mr. Scott Johnson, Associate Planner
City of Sacramento
Development Services Department
300 Richards Boulevard, 3rd Floor
Sacramento, California 95811

Subject: Comments on the Notice of Availability/Intent to Approve the Initial Study/Mitigated Negative Declaration for the Interstate 80 Bicycle and Pedestrian Overcrossing Project in Natomas, Sacramento County

Dear Mr. Johnson:

The U.S. Fish and Wildlife Service (Service) and California Department of Fish and Game (DFG) (hereafter collectively referred to as the Wildlife Agencies) have reviewed the Initial Study/Mitigated Negative Declaration (IS/MND) prepared by the City of Sacramento (City) for the Interstate 80 Bicycle and Pedestrian Overcrossing Project (proposed project) in Sacramento County, California. The proposed project is located where the Natomas Main Drainage Canal crosses under Interstate 80 (I-80) just west of the I-80/I-5 interchange in the Natomas area of the City of Sacramento. The City proposes to construct a pedestrian and bicycle crossing over I-80, a bridge across the West Drainage Canal to connect the overcrossing with an existing trail, and associated facilities.

The DFG is providing comments in response to the IS/MND as trustee for the State's fish and wildlife resources. As a trustee agency, the DFG has jurisdiction over the conservation, protection, and management of fish, wildlife, native plants, and habitat necessary for biologically sustainable populations of these resources. In that capacity, the DFG administers the California Endangered Species Act (CESA), the Native Plant Protection Act (NPPA), and other provisions of the California Fish and Game Code that afford protection to the State's fish and wildlife trust resources. The Service is providing comments in accordance with the Endangered Species Act of 1973, as amended (16 U.S.C. 1531 et seq.) (ESA).

The effects analysis and proposed conservation strategy in this IS/MND have not previously been reviewed and evaluated by the Wildlife Agencies to determine their consistency with Federal and

State ESA requirements. As outlined below, the Wildlife Agencies request that additional information be included to determine effects of the proposed project on the federally- and State-listed species and implementation of the Natomas Basin Habitat Conservation Plan (NBHCP).

**Effects of the Proposed Project on the NBHCP**

The proposed activities described in the IS/MND could result in adverse affects to federally- and State-listed species, including the federally and state-listed threatened, giant garter snake *(Thamnophis gigas;* GGS*),* and the state-threatened Swainson's hawk *(Buteo swainsoni;* SWH). The proposed project is likely to affect listed species in the Natomas Basin as a result of modification and disturbance of habitat that supports listed species beyond that anticipated, analyzed and covered for take under Incidental Take Permits (ITPs) issued to the City of Sacramento (City), Sutter County, and the Natomas Basin Conservancy (Conservancy) for the NBHCP. This would constitute a departure from the NBHCP's Operating Conservation Program. The NBHCP's ITPs cover the take of 22 plant and animal species, many of which are listed as endangered or threatened under the California Endangered Species Act and/or the Federal Endangered Species Act, including GGS and SWH.

The effectiveness of the NBHCP's Operating Conservation Program is explicitly premised upon the City's commitment to limit total development to 8,050 acres within the City's Permit Area, and Sutter County's commitment to limit total development to 7,467 acres within Sutter County's Permit Area. These commitments are outlined in Sections I.B.2.a and I.B.2.b of the NBHCP and Section 3.1.1 of the NBHCP's Implementation Agreement. The NBHCP's Implementation Agreement describes the mechanisms by which the NBHCP is implemented and establishes terms and conditions that support issuance of the ITPs by the Wildlife Agencies to allow the taking of the covered species within the NBHCP's permit areas by the City, Sutter County, and the Conservancy. Section 3.1.1(a) of the NBHCP's Implementation Agreement states that approval of any future development by the City or Sutter County within the Natomas Basin above that covered by the NBHCP shall trigger a reevaluation of the NBHCP and respective ITPs, a new effects analysis, potential amendments and/or revisions to the NBHCP and ITPs, a separate conservation strategy and issuance of ITPs to the City or Sutter County for that additional development and/or possible suspension or revocation of the City's or Sutter County's ITPs in the event such limitations are violated. On September 7, 2005, Judge Levi issued a decision in the Federal NBHCP litigation, which cautioned in footnote 13 of that decision that "the Service and those seeking an ITP in the future will face an uphill battle if they attempt to argue that additional development in the Basin beyond the 17,500 acres will not result in jeopardy" to GGS and SWH.

The ITPs issued to the Conservancy authorized the take of covered species associated with the restoration, enhancement, operation, and management of 7,758.5 acres of upland, managed marsh and rice preserves set aside as mitigation for the City's and Sutter County's development activities under the NBHCP. Approval of additional development in the Natomas Basin would likely make it more difficult for the Conservancy to fulfill its obligations under the NBHCP. Further, additional development could result in isolation of the Conservancy's preserve lands,

thus threatening the Conservancy's ability to implement the NBHCP's operating conservation strategy.

Approval of additional development in the Natomas Basin may: (1) result in additional direct, indirect and cumulative impacts to the NBHCP's 22 covered species; (2) biologically isolate the Conservancy's conservation lands; (3) decrease biological connectivity between and within the Natomas Basin's three major geographic areas; (4) decrease the available acreage and locations of potential Conservancy acquisitions; and (5) adversely affect implementation of the NBHCP and its operating conservation strategy. The IS/MND does not adequately address the impacts of the proposed project on the NBHCP's Operating Conservation Program. While the Wildlife Agencies recognize that the proposed project is not development in the traditional sense, it will result in the loss, modification, or fragmentation of listed species habitat which could affect the NBHCP's operating conservation strategy.

The following is a list of possible future projects that may represent reasonably foreseeable cumulative habitat modification in the basin. If they are deemed cumulative, the effects of the proposed project may be considerably greater in light of these potential land use changes, and result in increased conservation needs for the Covered Species in the basin.

Reasonably foreseeable future projects in the Natomas Basin include:

- Natomas Fish Screen Replacement
- Sacramento River Water Reliability Study
- Sacramento International Airport Master Plan
- Natomas Joint Vision
- Downtown to Natomas Rail Light Rail Transportation
- Sacramento Municipal Utility Substation Expansion Projects (numerous)
- Natomas Unified School District West Lakeside School
- Sacramento Area Flood Control Agency's Natomas Levee Improvement
- Greenbriar

In highlighting what we view may be probable and reasonably foreseeable future development in the Natomas Basin, the Wildlife Agencies recognize that additional development in the basin beyond that authorized under the existing Federal and State permits is proposed and all concerned parties should reasonably expect that to occur. Even though specific details regarding individual projects may not be available, the effects analysis needs to provide a more thorough assessment of reasonably foreseeable additional development in the basin and the cumulative impact of the proposed project in light of other reasonably foreseeable development on the long-term viability of the operating conservation strategy.

**Effects of the Proposed Project on the Swainson's Hawk**

The IS/MND states that 1.58 acres of SWH foraging habitat is expected to be lost temporarily and 0.6 acres of SWH foraging habitat will be lost permanently as a result of the proposed project, but does not provide measures to mitigate this potentially significant adverse impact to below a level

that is significant. The Wildlife Agencies believe that the loss of any SWH foraging habitat within the Natomas Basin would constitute a significant adverse impact, and recommend that the IS/MND be revised to include appropriate compensatory mitigation measures to reduce the impacts to less than significant.

The IS/MND describes the proposed project's potential to impact nesting SWH, and provides measures to reduce take of SWH, including "if construction or other related activities which may cause nest abandonment or forced fledging are proposed within the 0.25 mile zone, intensive monitoring...by a DFG approved raptor biologist will be required..." The DFG recommends that the IS/MND be revised to state that if any work is expected to occur within 0.25 miles of an active SWH nest, then the project proponent will consult with the DFG under Fish and Game Code (FGC) section 2081, and may need to obtain an Incidental Take Permit (ITP). Specific measures to minimize and fully mitigate the potential taking of SWH will be evaluated during development of a 2081 ITP.

**Effects of the Proposed Project on the Giant Garter Snake**

The IS/MND includes a description of the GGS habitat to be affected by the proposed project. The description is broken down into effects both within and outside of the City's NBHCP permit area, and states that habitat compensation fees may be required for temporary and permanent effects to GGS outside of the permit area. However, neither the mechanism, location, nor the amount of compensatory mitigation was described in this document. The Wildlife Agencies request that the City revise the IS/MND to consider and outline how compensatory mitigation will occur for the proposed project in light of the aforementioned effects to the listed species and on the efficacy of the NBHCP.

**Conclusion**

The IS/MND does not adequately address the impacts of the proposed project on the Natomas Basin Habitat Conservation Plan's operating conservation program. In particular, the IS/MND does not include a comprehensive and meaningful analysis of the proposed projects' effects on GGS, SWH, and other Covered Species, and conservation measures that may be necessary to off-set or minimize the effects of the proposed project. Therefore, the Wildlife Agencies cannot fully evaluate the effects analysis for the proposed project to determine its consistency with Federal and State ESA requirements or its effects on the efficacy of the NBHCP. The Wildlife Agencies requests this additional information be included in a recirculated draft CEQA document, and include a discussion of the proposed projects effects on the NBHCP and conservation measures to off-set or minimize those effects.

Pursuant to Public Resources Code Sections 21092 and 21092.2, the DFG requests written notification of proposed actions and pending decisions regarding this project. Written notifications should be directed to the DFG Sacramento Valley/Central Sierra Region, 1701 Nimbus Road, Suite A, Rancho Cordova, California 95670. The Service also requests being informed regarding any actions on the proposed project. Written notification can be submitted to the Service at the letterhead address.

Thank you for the opportunity to review this project. We remain committed to working with the City to ensure that the proposed I-80 Bicycle and Pedestrian Overcrossing project avoids and minimizes effects on listed species and remain consistent with the operating conservation program of the NBHCP. Please contact Jana Milliken, the Sacramento Valley Branch Chief of the Service, at (916) 414-6645, or Todd Gardner, Staff Environmental Scientist, at (209) 745-1968, or Kent Smith, Habitat Conservation Program Manager, at (916) 358-2382, of the DFG if you have any questions or concerns regarding this letter.

Sincerely,

Cay C. Goude
Assistant Field Supervisor
U.S. Fish and Wildlife Service

Kent A. Smith
Habitat Conservation Program Manager
California Department of Fish and Game

cc:

Lynn Cox, DOI Solicitor, Sacramento, CA
John Roberts, The Natomas Basin Conservancy, Sacramento, CA
Kent Smith, Jeff Drongesen and Todd Gardner, California Department of Fish and Game, Rancho Cordova, CA
Scot Mende and Rochelle Amhrein, City of Sacramento, CA
Julie Car, County of Sacramento, CA
John Roberts, The Natomas Basin Conservancy, Sacramento, CA

**July 31, 2008 - Caltrans response to the I-80 Bike/Ped Crossing 03-4C4400 CEQA-IS**

Thank you so much for the opportunity to review your Draft Environmental Document

Since Caltrans was unable to review the document before it went out to the public, we are sending our comments at this time. We received the document on July 2, 2008.

1) We have a few questions about the signed (Final)MND dated June 24, 2008 that is included in this draft. Was this recorded with the State Clearinghouse as a final document prior to the 30-day public review, or is this MND for another document?

2) On page 2 of Appendix D, change Larry Craig to Larry Chiea.

3) Any reference to FHWA should be changed to California Department of Transportation(Caltrans) since we will be the NEPA lead agency under the NEPA Delegation program.

4) Please change the title for Lupe Jimenez from District Director to Branch Chief.

   From the Architectural Historian the comments are: Since this is a CEQA-only document, they need to remove all reference to 36 CFR Part 800 and replace with the appropriate CEQA language [i.e., 15064.5, 15126.4(b)]. The entire Regulatory Setting, Environmental Consequences, and Mitigation sections reflect Section 106 language, which is a federal law and should only be included in NEPA documents.

   Similarly, replace "historic property" (a Section 106 term) with "historical resource" (a CEQA and California Register term)

   Page 2.1-17 refers to "Widell pers. comm." -- Ms. Widell provided this nformation in a letter dated September 16, 1994, not through personal communication.

5)

6) No comments or changes from Visual Quality, Cultural, Hazardous Waste, Air Quality or Noise Quality.

**Exhibit D**

## Interstate 80 Bicycle/Pedestrian Overcrossing Project (HC21)
## Mitigation Reporting Program

In January 1989, Assembly Bill 3180 went into effect requiring the City to monitor all mitigation measures applicable to this project and included in the Mitigated Negative Declaration. For this project, mitigation reporting will be preformed by the City of Sacramento Department of Transportation in accordance with the monitoring and reporting program developed by the City to implement AB 3180.

This Mitigation Reporting Program is being prepared by the Development Services Department, Environmental Planning Services, 300 Richards Boulevard, 3rd Floor, Sacramento, CA 95811, pursuant to the California Environmental Quality Guidelines, Section 21081.

The City of Sacramento Department of Transportation will submit its completed Reporting Program to Environmental Planning Services for inclusion in the annual report to the City Council.

**Project Number:** HC21

**Project Name:** Interstate 80 (I-80) Bicycle/Pedestrian Overcrossing (POC) Project

**Project Location:** The project site is located within the northwestern area of the City of Sacramento, in Sacramento County, in the North Natomas and South Natomas Community Plan areas. The site is located where the Natomas Main Drainage Canal crosses I-80 at Post Mile (PM) 2.10, approximately 1/3 mile west of Interstate 5 (I-5).

**Project Description:** The City of Sacramento proposes to construct a pedestrian/bicycle overcrossing (POC) over Interstate 80 adjacent to the Natomas Main Drainage Canal where the Natomas West and Natomas East Drainage canals merge. The City also proposes to construct an at-grade level bridge (Canal Bridge) across the West Drainage Canal to link the north end of the POC with the existing trail. The project will also consist of all railings and fencing, grading, paving and slope protection, signage, and lighting associated with the POC. The POC will consist of a cast-in-place box girder section, supported by two cast-in-place concrete abutments and five cast-in-place concrete columns on driven piles. The Canal Bridge will include a pre-manufactured steel truss “flat slab” structure this unit will consist of weathering steel, concrete deck, and smooth steel handrails; it will be designed to be removable as needed by the Reclamation District 1000 for maintenance of the Canal. Concrete will also line the canal bottom under the bridge and 10 feet beyond in both directions.

# MITIGATION REPORTING PROGRAM CHECKLIST FOR THE INTERSTATE 80 BICYCLE PEDESTRIAN OVERCROSSING PROJECT MITIGATED NEGATIVE DECLARATION (HC21)

| Mitigation Measure | Reporting Milestone | Reporting / Responsible Party | VERIFICATION OF COMPLIANCE | |
|---|---|---|---|---|
| | | | Initials | Date |
| LAND USE<br><br>**LU-1: Locate Construction Staging Areas away from Residential Areas**<br>Prior to final approval of any project site improvement plans and the commencement of construction activities, the City will locate construction staging areas as far as feasibly possible from existing residential areas. Construction staging areas will be identified in project site improvement plans.<br><br>**LU-2: Limit Construction Traffic**<br>During construction activities, the City will limit the amount of daily construction equipment traffic by staging most construction equipment and vehicles on the project site at the end of each workday rather than removing them.<br><br>**LU-3: Provide Advance Notice of Construction Activities**<br>Prior to construction activities, the City will provide advanced public noticing of construction activities. Noticing will consist of the following items:<br>• Property owners within 500 feet of the proposed project will be noticed.<br>• Notices will identify time frames for construction activities and when roads may be partially closed, if required.<br>• Construction informational signage will be placed along affected roadways one week in advance, warning travelers of construction along roadways | Prior to and during construction –<br><br>Note shall be written on all construction documents for implementation during construction | City of Sacramento Department of Transportation<br><br>And<br><br>Contractor | | |
| **PALEONTOLOGY**<br><br>**PAL-1: During construction activities, if sensitive paleontological resources are encountered, work will be stopped immediately and recording and salvage activities will be instituted**<br>If, during construction activities, sensitive paleontological resources are encountered, work will be stopped immediately and recording and salvage activities will be undertaken by a qualified paleontologist. The paleontologist may oversee the recoding, preservation, and/or salvage of such resources, if necessary, according to professional standards and specifications set forth by the | During Construction – Note shall be written on all construction documents for implementation | City of Sacramento Department of Transportation<br><br>And | | |

| | | | | |
|---|---|---|---|---|
| Society of Vertebrate Paleontology. Implementation of this measure will reduce impacts below the level of significance. | during construction. | Contractor | | |
| **HAZARDOUS WASTE/MATERIALS**<br><br>**HAZ-1: Comply with Standard Specifications for Public Works Construction and the SWPPP**<br>The project's required compliances with the Standard Specifications for Public Works Construction and the SWPPP, mentioned above, would reduce impacts relating to the exposure of people to existing sources of potential health hazards to a less-than-significant level.<br><br>**HAZ-2: Conduct site investigation for Aerially Deposited Lead**<br>This is a potentially significant impact because workers who will engage in construction activities (e.g., excavation) may be exposed to contaminated soils. A site investigation will be undertaken to determine the presence and concentration of ADL in soil along selected portions of the POC project near the freeway, and to determine appropriate mitigation, if necessary. | During construction – Note shall be written on all construction documents for implementation during construction. | City of Sacramento Department of Transportation | | |
| **AIR QUALITY**<br><br>**AIR-1: Reduce NOX emissions from off-road diesel-powered equipment**<br>The City of Sacramento will provide a plan for approval by the lead agency and SMAQMD demonstrating that the heavy-duty (> 50 hp) off-road vehicles to be used for the construction project, including owned, leased, and subcontractor vehicles, will achieve a project-wide fleet-average 20% NOx reduction and 45% particulate reduction compared to the most recent CARB fleet average at time of construction. Acceptable options for reducing emissions will include the use of late-model engines, lowemission diesel products, alternative fuels, engine retrofit technology capable of reducing NOX emissions by 40% (i.e., diesel oxidation catalyst), after-treatment products, and/or other options as they become available.<br><br>**AIR-2: Submit an off-road construction equipment inventory to the SMAQMD**<br>The City of Sacramento will submit to the lead agency and the SMAQMD a comprehensive inventory of all off-road construction equipment, equal to or greater than 50 hp, that will be used an aggregate of 40 or more hours during any portion of the construction project. The inventory will include the horsepower rating, engine production year, and projected hours of use or fuel throughput for each piece of equipment.<br><br>The inventory will be updated and submitted monthly throughout the duration of the project, except that an inventory will not be required for any 30-day period in which no construction activity occurs. At least 48 hours prior to the use of subject heavy-duty off-road equipment, the project representative will provide SMAQMD with the anticipated construction timeline, including start | Prior to and during construction –<br><br>Note shall be written on all construction documents for implementation during construction.<br><br>Prior to and during construction –<br><br>Note shall be written on all construction documents for implementation during construction | City of Sacramento Department of Transportation<br><br>And<br><br>Contractor<br><br>City of Sacramento Department of Transportation<br><br>And<br><br>Contractor | | |

| | | | | |
|---|---|---|---|---|
| date, and name and phone number of the project manager and onsite foreman.<br><br>**AIR-3: Control visible emissions from off-road diesel-powered equipment**<br><br>The city of Sacramento will ensure that emissions from all off-road diesel-powered equipment used on the project site do not exceed 40% opacity for more than 3 minutes in any 1 hour. Any equipment found to exceed 40% opacity (or Ringelmann 2.0) will be repaired immediately, and the SMAQMD will be notified within 48 hours of identification of noncompliant equipment. A visual survey of all in-operation equipment will be made at least weekly, and a monthly summary of the visual survey results will be submitted throughout the duration of the project, except that the monthly summary will not be required for any 30-day period in which no construction activity occurs. The monthly summary will include the quantity and type of vehicles surveyed, as well as the dates of each survey. The SMAQMD and/or other officials may conduct periodic site inspections to determine compliance. Nothing in this section supersedes other SMAQMD or state rules or regulations.<br><br>**AIR-4: Phase construction activities**<br><br>Construction activities will be phased such that construction of project stages (as indicated above) does not occur concurrently.<br><br>**AIR-5: Control fugitive dust emissions**<br><br>The project applicant will ensure that daily ground disturbance does not exceed 15 acres per day. When daily ground disturbance exceeds 5 acres per day, the required control measures indicated in Table 2.2.5-4 will be implemented. | Prior to and during construction –<br><br>Note shall be written on all construction documents for implementation during construction<br><br>Prior to and during construction – Note shall be written on all construction documents for implementation during construction. | City of Sacramento Department of Transportation<br><br>And<br><br>Contractor<br><br>City of Sacramento Department of Transportation<br><br>And<br><br>Contractor | | |
| **NOISE**<br><br>**NO-1: Limit hours for construction activities**<br><br>Construction activities will be limited to the hours established within the City's noise ordinance.<br><br>**NO-2: Equip engines with silencers**<br><br>Pursuant to the City's noise ordinance, all internal combustion engines in use on the project must be equipped with original manufacturers' silencers or their after-market equivalents, in good working order (City of Sacramento Code 66.203). | During construction – Note shall be written on all construction documents for implementation during construction. | City of Sacramento Department of Transportation<br><br>And<br><br>Contractor | | |
| **BIOLOGICAL RESOURCES**<br><br>*Project Specific Mitigation Measures* | | | | |

| | | | | |
|---|---|---|---|---|
| **BIO-1: Install construction barrier fencing to protect sensitive biological resources located adjacent to the construction zone**<br><br>The City or its contractor will install orange construction barrier fencing to identify environmentally sensitive areas. The construction specifications will require that a qualified biologist identify sensitive biological habitat on site and areas to avoid during construction. Sensitive communities within the area that would generally be required for construction, including staging and access, will be fenced off to avoid disturbance. Sensitive resources that occur in and adjacent to the construction area include cottonwood-willow riparian forest and any trees that support nests of sensitive bird species. Before construction, the construction contractor will work with the project engineer and a resource specialist to identify the locations for the barrier fencing and will place stakes around the sensitive resource sites to indicate these locations. The protected area will be designated as an environmentally sensitive area and will be clearly identified on the construction specifications. The fencing will be installed before construction activities are initiated and will be maintained throughout the construction period. The following paragraph will be included in the construction specifications:<br><br>The Contractor's attention is directed to the areas designated as "environmentally sensitive areas." These areas are protected, and no entry by the Contractor for any purpose will be allowed unless specifically authorized in writing by the City. The Contractor will take measures to ensure that Contractor's forces do not enter or disturb these areas, including giving written notice to employees and subcontractors.<br><br>Temporary fences around the environmentally sensitive areas will be installed as the first order of work. They will be furnished, constructed, maintained, and removed as shown on the plans, as specified in the special provisions, and as directed by the project engineer. The fencing will be commercial-quality woven polypropylene, orange in color, and at least 4 feet high (Tensor Polygrid or equivalent). The fencing will be tightly strung on posts with maximum 10-foot spacing. | Prior to and during construction –<br><br>Note shall be written on all construction documents for implementation during construction | City of Sacramento Department of Transportation<br><br>And<br><br>Contractor | | |
| **BIO-2: Implement City Bicycle Masterplan (BMP) measures to reduce impacts on Waters of the U.S.**<br><br>The following mitigation measures are recommended under Measure 6.4-2 in the BMP Draft EIR<br><br>(Analytical Environmental Services 2003) to reduce impacts on waters of the U.S. associated with the proposed project to a less-than-significant level.<br><br>a) A formal delineation of "Waters of the U.S." occurring within Proposed Project areas should be prepared by a qualified biologist and submitted to the USACE for verification. The appropriate Department of the Army permit should be obtained from the USACE prior to the discharge of any fill material within "Waters of the U.S." The Proposed Project should comply with any required compensatory mitigation for loss of "Waters of the U.S."<br>b) Water Quality Certification should be obtained from the Regional Water Quality Control Board prior to development of the Proposed Project areas.<br>c) Prior to any modification of intermittent drainages, formal notification of streambed alteration should be provided to the CDFG and a Streambed Alteration Agreement should be obtained, | Prior to and during construction –<br><br>Note shall be written on all construction documents for implementation during construction | City of Sacramento Department of Transportation<br><br>And<br><br>Contractor | | |

| | | | | |
|---|---|---|---|---|
| if required. | | | | |
| **BIO-3: Obtain and comply with State, Federal, and Local Permits**<br>Before any construction activities are initiated and bridge specifications have been finalized, the City will obtain the following permits:<br>• CWA Section 404 nationwide permit (Nationwide Permit 14: Linear Transportation Projects) from the USACE;<br>• CWA Section 401 water quality certification from the Central Valley RWQCB (all Section 404 permits require a Section 401 water quality certification from RWQCB);<br>• CWA Section 402/NPDES permit from State Water Resources Control Board (requiring preparation of a SWPPP);<br>• Section 1602 Streambed Alteration Agreement from DFG; and<br>• Biological Opinion from USFWS.<br>Copies of these permits will be provided to the contractor with the construction specifications. The City will be responsible for ensuring compliance with the conditions set forth in these permits. | Prior to and during construction –<br><br>Note shall be written on all construction documents for implementation during construction | City of Sacramento Department of Transportation<br><br>And<br><br>Contractor | | |
| **BIO-4: Implement City Bicycle Masterplan measures to reduce impacts to sensitive species**<br>According to Measure 6.4-1 (Impacts to Special-Status Species) in the Draft EIR (Analytical Environmental Services 2003), all project-related activity in the Natomas Basin will comply with the conservation measures for special-status species covered by the NBHCP. The following measures are recommended to reduce the impacts to special-status species associated with the proposed project to a less-than-significant level.<br>• Prior to implementation of the specific amendments to the Bikeway Master Plan, a biological resources assessment shall be conducted for the project-specific area to determine the potential for and the presence of special-status species and nesting birds.<br>• If special-status species are determined to be present within and adjacent to bikeway alignments, measures shall be added to avoid direct and indirect impacts to these species. These measures could include, but would not be limited, to the following: the redesign of the bikeway alignment to avoid sensitive areas and timing construction activity to avoid disturbance during nesting and breeding periods. Measures to minimize direct and indirect impacts could include the fencing off of sensitive areas during construction activity, worker awareness training, posting signs in sensitive areas, and installing permanent structures to discourage off-trail riding through sensitive areas.<br>• Survey protocol and mitigation measures for federally and state threatened and endangered species shall follow guidelines developed by USFWS and CDFG for individual species.<br>• If nesting birds are determined to be within or immediately adjacent to specific bikeway alignments, construction activity shall be delayed until nestlings have fledged. | Prior to and during construction –<br><br>Note shall be written on all construction documents for implementation during construction | City of Sacramento Department of Transportation<br><br>And<br><br>Contractor | | |
| **BIO-5: Construct outside of the nesting season or conduct preconstruction surveys for** | | | | |

| | | | | |
|---|---|---|---|---|
| **nests and implement appropriate restrictions**<br><br>To ensure that unauthorized take of white-tailed kites, migratory birds, and other non–special-status raptors does not occur during project construction as a result of direct nest removal or indirect disturbance (e.g., dust, noise, vibration), the City shall implement the following measures:<br><br>a) When feasible, all tree removal will occur between September 15 and February 1 to avoid the breeding season of legally protected bird species that could use the area and to discourage birds from nesting near an upcoming construction area. This period may be modified if authorized by DFG.<br>b) If avoidance during the nesting season is not feasible (i.e., if construction activities must take place between March 15 and September 15), then before grading may begin, all trees within 350 feet of any grading or earthmoving activity will be surveyed for active nests by a qualified biologist. If active nests are found within 350 feet of potential construction activity, a fence will be erected around the nest at a distance of up to 350 feet, depending on the species, from the edge of the canopy to prevent disturbance from construction and intrusions on the nest area. The appropriate buffer width will be determined by the City in consultation with DFG.<br>c) No construction vehicles will be permitted within restricted areas unless directly related to the management or protection of the legally protected species.<br>d) If a nest is abandoned despite efforts to minimize disturbance, and if the nestlings are still alive, the City will contact DFG and, subject to DFG approval, fund the recovery and hacking (controlled release of captive, reared young) of the nestlings.<br>e) If the nest of a legally protected species is located in a tree designated for removal, the removal will be deferred until after September 15 or until the adults and young of the year are no longer dependent on the nest site, as determined by a qualified biologist. | Prior to and during construction –<br><br>Note shall be written on all construction documents for implementation during construction | City of Sacramento Department of Transportation<br><br>And<br><br>Contractor | | |
| **BIO-6: Compensate for the temporary and permanent loss of GGS habitat**<br><br>Approximately 1.08 acres of upland GGS habitat and 0.23 acres of aquatic habitat will be temporarily affected by construction activities. Approximately 0.66 acres of upland habitat will be permanently lost as a result of construction activities. Prior to commencement of ground disturbing activities, the project will compensate for permanent loss of GGS habitat at ratio of 3:1. Temporary habitat loss will be mitigated by restoration for one (1) season of disturbance; restoration plus 1:1 replacement for two (2) seasons of disturbance; or 3:1 replacement (or restoration plus 2:1 replacement) for more than two seasons, and shall be approved by and occur at a location acceptable to the U.S. Fish and Wildlife Service and California Department of Fish and Game.<br><br>Restoration of GGS habitat within the project area pursuant to "Guidelines for Restoration and/or Replacement of Giant Garter Snake Habitat" or other methods agreeable to the agencies identified in the Biological Opinion and agreeable to RD1000 will be undertaken. | Prior to and during construction –<br><br>Note shall be written on all construction documents for implementation during construction | City of Sacramento Department of Transportation<br><br>And<br><br>Contractor | | |
| **BIO-7: Avoid the introduction or spread of noxious weeds in the project area** | Prior to and during construction – | City of Sacramento | | |

| | | | | |
|---|---|---|---|---|
| To avoid the introduction or spread of noxious weeds into previously uninfested areas the City will implement the following measures:<br>• Treat small, isolated infestations with approved eradication methods at an appropriate time to prevent and/or destroy viable plant parts or seeds.<br>• Wash all equipment before entering the project area. Equipment washing will be done off site at a paved facility (located away from sensitive biological resource areas).<br>• Revegetate and restore disturbed areas immediately after construction is complete. The revegetation portion of the SWPPP will contain specifications for using certified weed-free native and nonnative mixes. The SWPPP will also specify that all disturbed areas will be weeded (if necessary) and reseeded in the following years if determined to be necessary. | Note shall be written on all construction documents for implementation during construction | Department of Transportation<br><br>And<br><br>Contractor | | |
| **BIO-8 Remove Fish From the Isolated Cofferdam Area**<br>The City will ensure that a fish biologist is on site prior to dewatering to implement a fish rescue operation in the isolated area between the cofferdams that may harbor stranded fish. Exclusion and rescue protocols outlined by DFG will be implemented. Fish shall be removed from the isolated area with a dip net. At least one person of the fish rescue team will have a 4-year college degree in fisheries or biology, or related degree. The person must also have at least 2 years of professional experience in fisheries field surveys. All fish will be released downstream of the project area. If any listed fish such as steelhead are recovered, NMFS and DFG will be notified immediately and construction activities will cease until the agencies and the City have decided on appropriate actions. | Prior to and during construction –<br><br>Note shall be written on all construction documents for implementation during construction | City of Sacramento Department of Transportation<br><br>And<br><br>Contractor | | |
| ***HCP Mitigation Measures***<br>The following conservation measures from the NBHCP are designed to avoid, minimize, or mitigate take of the Covered Species that are applicable to this project.<br>**HCP Mitigation Measure V.A.1: Preconstruction surveys**<br>Not less than 30 days or more than 6 months prior to commencement of construction activities on specific Authorized Development sites in the NBHCP area, a preconstruction survey of the site shall be conducted to determine the status and presence of, and likely impacts to, all Covered Species on the sites. However, preconstruction surveys for an individual species maybe completed up to one year in advance if the sole period for reliable detection of that species is between May 1 and December 31. The applicant seeking to develop land will be responsible for contracting with qualified biological consultants to carry out the preconstruction surveys, and as necessary, implementing specific take minimization and other conservation measures set forth in the NBHCP and provided by the wildlife agencies. The results of the preconstruction surveys along with recommended take minimization measures shall be documented in a report and shall be submitted to the Land Use Agency, USFWS, CDFG, and the NBC. Based upon the survey results, the Land Use Permittees will identify applicable take avoidance and other site-specific conservation measures, consistent with NBHCP, required to be carried out on the sites. The approved preconstruction survey documents and list of conservation measures will be submitted | Prior to and during construction –<br><br>Note shall be written on all construction documents for implementation during construction | City of Sacramento Department of Transportation<br><br>And<br><br>Contractor | | |

| | | | | |
|---|---|---|---|---|
| by the developer of the authorized development project to the applicable land use agency to demonstrate compliance with the NBHCP. | | | | |
| **HCP Mitigation Measure V.A.3: General measures to minimize take**<br>• Tree Preservation: Valley oaks and other large trees should be preserved whenever possible. Preserve and restore stands of riparian trees used by Swainson's hawks and other animals for nesting.<br>• Native Plants: Improve the wildlife habitat value of landscaped parks, buffers, and developed areas by planting trees and shrubs which are native to the Natomas Basin and therefore are used by native animals.<br>• Protect Raptor Nests: Avoid the raptor nesting season when scheduling construction near nests. Specific avoidance criteria are set forth in the species-specific measures later in this chapter.<br>• Protected Plant/Animal Species, also referred to as "Special-Status Species": Search for protected plant species during flowering season prior to construction and protected animal species during the appropriate season. | Prior to and during construction –<br><br>Note shall be written on all construction documents for implementation during construction | City of Sacramento Department of Transportation<br><br>And<br><br>Contractor | | |
| **HCP Mitigation Measure V.A.5j: Measures to reduce take of northwestern pond turtle**<br>Take of the northwestern pond turtle as a result of habitat destruction during construction activities, including the removal of irrigation ditches and drains, and during ditch and drain maintenance, will be minimized by the dewatering requirement described [in Section 2.3.5.2 below for Giant Garter Snake] (HCP Mitigation Measure V.A.5a).<br><br>**HCP Mitigation Measure V.A.5g: Measures to reduce take of loggerhead shrike**<br>1. Prior to approval of Urban Development Permit, the City shall require a preconstruction survey for nesting shrikes.<br>2. If surveys identify an active loggerhead shrike nest that will be impacted by Authorized Development, the developer shall install brightly colored construction fencing that establishes a boundary of 100 feet from the active nest. No disturbance associated with Authorized Development shall occur within the 100-foot fenced area during the nesting season of March 1 through July 31. A qualified biologist, with concurrence from DFG must determine young have fledged or that the nest is no longer occupied prior to disturbance of the nest site. | Prior to and during construction –<br><br>Note shall be written on all construction documents for implementation during construction | City of Sacramento Department of Transportation<br><br>And<br><br>Contractor | | |
| **HCP Mitigation Measure V.A.5a: Measures to reduce take of giant garter snake**<br>The following mitigation measures taken from the NBHCP will be implemented to avoid and minimize possible effects on GGS and its habitat (City of Sacramento et al. 2003)<br>• All construction activities within the Natomas Basin involving disturbance of giant garter snake habitat will be conducted between May 1 and September 30, which is the active period | Prior to and during construction – Note shall be written on all construction documents for | City of Sacramento Department of Transportation<br><br>And | | |

| | | | | |
|---|---|---|---|---|
| for giant garter snakes. Conducting construction activities during this period lessens direct impacts on the snake because they are active and can avoid danger. If construction activities are necessary in giant garter snake habitat between October 1 and April 30, the USFWS Sacramento Office shall be contacted to determine whether additional measures are necessary to minimize and avoid take. Measures recommended by USFWS will be implemented.<br>• Preconstruction surveys for giant garter snake, as well as other NBHCP Covered Species, must be completed for all development projects by a qualified biologist approved by USFWS. If any giant garter snake habitat is found within a specific site, the following additional measures shall be implemented to minimize disturbance of habitat and harassment of GGS, unless such project is specifically exempted by USFWS.<br>• Between April 15 and September 30, any dewatered habitat must remain dry, with no puddled water, for at least 15 consecutive days before workers excavate or fill the dewatered habitat. Make sure dewatered habitat does not continue to support GGS prey (e.g., fish, tadpoles, aquatic insects), which could detain or attract snakes into the area. If a site cannot be completely dewatered, netting and salvage of prey items may be necessary. This measure removes aquatic habitat and allows GGS to leave on its own.<br>• A qualified biologist will conduct a preconstruction survey for GGS, no more than 24 hours prior to the start of construction activities (site preparation and grading). If construction activities stop on the project site for a period of two or more weeks, a new GGS survey will be completed no more than 24 hours prior to the restart of construction activities.<br>• Confine clearing to the minimal area necessary to facilitate construction activities. To ensure that construction equipment and personnel do not affect upland and aquatic habitat for giant garter snake outside of the construction corridor, orange barrier fencing will be erected to clearly define the habitat to be avoided.<br>• Construction personnel will participate in a USFWS-approved worker environmental awareness program. A USFWS-approved biologist will inform all construction personnel about the life history of giant garter snakes; how to identify species and their habitats, and what to do if a GGS is encountered during construction activities; and the terms and conditions of the biological opinion. Proof of this instruction will be submitted to the USFWS Sacramento Office.<br>• If a live GGS is encountered during construction activities, immediately notify USFWS and the project's biological monitor. The biological monitor or his assignee shall do the following:<br>1. Stop construction activity in the vicinity of the snake. Monitor the snake and allow the snake to leave on its own. The monitor shall remain the area for the remainder of the work day to make sure the snake is not harmed or if it leaves the site, does not return. Escape routes for giant garter snake should be determined in advance of construction and snakes should always be allowed to leave on their own. If a GGS does not leave on its own within one working day, further consultation with USFWS is required.<br>• Upon locating dead, injured or sick threatened or endangered wildlife species, the project proponent must notify within one working day the Service's Division of Law Enforcement | implementation during construction<br><br>Prior to construction | Contractor | | |

| | | | | |
|---|---|---|---|---|
| (2800 Cottage Way, Sacramento, CA 95825) or the Sacramento Fish and Wildlife Office (2800 Cottage Way, Room W- 2605, Sacramento, CA 95825, telephone 916/414-6600). Written notification to both offices must be made within three calendar days and must include the date, time, and location of the finding of a specimen and any other pertinent information.<br>• Fill of construction debris may be used by GGS as an over-wintering site. Therefore, upon completion of construction activities, any temporary fill and construction debris shall be removed from the site. If this material is situated near undisturbed GGS habitat and it is to be removed between October 1 and April 30, is shall be inspected by a qualified biologist to assure that GGS are not using it as hibernacula.<br>• No plastic, monofilament, jute, or similar erosion control matting that could entangle snakes will be placed on a project site when working within 200 feet of snake aquatic habitat. Possible substitutions include coconut coir matting, tactified hydroseeding compounds, or other material approved by USFWS. | | | | |
| **HCP Mitigation Measure V.B.5b: Measures to reduce take of Swainson's hawk**<br>To ensure that possible impacts on nesting Swainson's hawks are less than significant, and that unauthorized take of Swainson's hawk does not occur, the City shall implement the following measures to reduce nest disturbance taken from the NBHCP:<br>1. Prior to the commencement of development activities at any development site within the NBHCP area, a preconstruction survey for nesting Swainson's hawks shall be conducted in suitable habitat within 0.5 mile of the project area. The surveys will be used to determine if any Swainson's hawk nest trees will be removed onsite, or if active nests occur on or within 0.5 mile of the site. These surveys shall be conducted according to the Swainson's Hawk Technical Advisory Committee's (May 31, 2000) methodology or updated methodologies, as approved by the Service and CDFG, using experienced Swainson's hawk surveyors.<br>2. If breeding Swainson's hawk (i.e., exhibiting nest building or nesting behavior) are identified, no project related disturbances (e.g., heavy equipment operation associated with construction) will occur within 0.5 mile of an active nest between March 15 and September 15, or until a qualified biologist, with concurrence by DFG, has determined that young have fledged or that the nest is no longer occupied. If the active nest is located within 0.25 mile) of existing urban development, the new disturbance zone can be limited to 0.25 mile versus 0.5 mile.<br>3.. Prior to commencement of ground disturbing activities, compensation for the temporary loss of 1.58 acres, and permanent loss of 0.66 acres of foraging habitat will be undertaken at a ratio of 1:1, and shall be approved by and occur at a location acceptable to the U.S. Fish and Wildlife Service and California Department of Fish and Game.<br>The above measures will apply to all of the project area. However, for the portion of this project outside of the HCP area, the City shall also consult directly with DFG for their concurrence with this approach and to determine whether additional permits (e.g., incidental take permit under Section 2081 of CESA) are required. | Prior to and during construction –<br><br>Note shall be written on all construction documents for implementation during construction | City of Sacramento Department of Transportation<br><br>And<br><br>Contractor | | |