Meeting Date: **1/7/2014**

Report Type: Review

Report ID: 2014-00010

City of SACRAMENTO **11**

City Council Report
915 I Street, 1st Floor
www.CityofSacramento.org

Title: (Agreement/Contract for Review and Information) Contract: McClatchy Park Renovation (L19136500)

Location: 3500 5th Avenue, District 5

Issue: Pursuant to the City's Park and Recreation Safety Implementation Plan, $2.3 million in capital improvements and operational enhancements are planned at McClatchy Park to improve the park for users. City Code requires City Council action to approve the award of a construction contract exceeding $100,000.

Recommendation: Review report recommending 1) a Motion approving the construction plans and specifications for McClatchy Park Renovation (L19136500) project; 2) awarding the contract to Goodland Landscape Construction, Inc. for an amount not to exceed $2,359,800; 3) authorizing the City Manager or City Manager's designee to execute the contract with Goodland Landscape Construction, Inc. for an amount not to exceed $2,359,800; and 4) continue to January 14, 2014 for approval.

Contact: Dennis Day, Associate Landscape Architect, (916) 808-7633; C. Gary Hyden, Supervising Landscape Architect, (916) 808-1949, Department of Parks and Recreation

Presenter: None

Department: Parks & Recreation Department

Division: Park Development Services

Dept ID: 19001121

Attachments:

1-Description/Analysis

2-Background

3-Location Map

4-Master Plan

5-Contract (McClatchy Park Renovation)

City Attorney Review

Approved as to Form
Sheryl Patterson
12/19/2013 1:33:04 PM

City Treasurer Review

Reviewed for Impact on Cash and Debt
Russell Fehr
12/13/2013 10:07:20 AM

Approvals/Acknowledgements

Department Director or Designee: Jim Combs - 12/17/2013 5:27:35 PM

Back to Report Table of Contents

Description/Analysis

Issue Detail: McClatchy Park is a 15.2 acre community park located at 3500 5th Avenue in Council District 5. Planned improvements will cover 3.84 acres and include automatic irrigation system upgrades, drainage, low maintenance and water saving landscaping, butterfly garden and shade trees, and a children's theme playground.

The playground design was based on the history of this 125 year old park (1889 to 2014) which began as an amusement park, and includes an entry archway which recalls the original "Oak Park" entrance. The playground recalls the original wooden roller coaster 'Scenic Railway', the miniature railway, streetcars, a small zoo of climbable concrete animals, and a water spray area which looks like a merry-go-round. The park renovation will also include additional concrete walkways, a concrete skate park, two tennis courts, one full-sized and one half-sized basketball courts, a drop shot court, and a large picnic pavilion with picnic tables and grill, individual picnic tables, drinking fountain, play area fencing, post and cable fencing, security cameras, solar pathway lighting, and a perimeter jogging path with fitness stations.

The formal bid process for this project has been completed and Goodland Landscape Construction, Inc. has been selected as the lowest responsible and responsive bidder. Staff is recommending the City Council award a contract to Goodland Landscape Construction, Inc. for an amount not to exceed $2,359,800.

A summary of the project background, a location map, master plan and improvement plan are included as attachments to this report.

Policy Considerations:

Providing parks and recreation facilities is consistent with the City's strategic plan to enhance livability in Sacramento's neighborhoods by expanding park, recreation, and trail facilities throughout the City. This is also part of the Park Development Process for park planning as stated in the *2005-2010 Parks and Recreation Master Plan*.

Sacramento City Code Chapter 3.60 identifies the general guidelines for completing contracts for public projects and procedures for bidding and issuing contracts over $1,000,000

Economic Impacts:

This park construction project, which totals $2,359,800, is expected to create 14.9 total jobs (9 direct jobs and 5.9 additional jobs through indirect and induced activities). Furthermore, it will create $1,865,173 in total economic output ($1,207,194 of direct output and another $657,979 of output through indirect and induced activities).

Environmental Considerations:

California Environmental Quality Act (CEQA):

On March 24, 2009, City Council approved the McClatchy Park Master Plan Update, the Mitigated Negative Declaration, and Mitigation Monitoring Plan. The current request is to construct Phase 2 of the McClatchy Park Master Plan Update. Phase 2 project components were evaluated within the Mitigated Negative Declaration for Project.

Therefore, the proposed Phase 2 Master Plan will not result in impacts over and above what was previously evaluated.

Sustainability:

The McClatchy Park renovation project has been reviewed for consistency with the goals, policies, and targets of the City's Sustainability Master Plan (SMP), the Parks and Recreation Sustainability Plan, and the 2030 General Plan. The project will advance the goals, policies, and targets of these plans by improving the health of residents through access to a diverse mix of wellness and recreation activities. The park improvements are also consistent with sustainable design through the use of water efficient irrigation, recycled materials, solar powered lights and security cameras, drought-tolerant plantings to minimize water use, and use of local vendors.

Committee/Commission Action:

On January 8, 2009, the McClatchy Park Master Plan was reviewed and supported by the Parks and Recreation Commission.

Rationale for Recommendation:

The formal bidding process for the McClatchy Park Renovation project was posted in accordance with City Code 3.60 and Administrative Policy Instruction #48. The project was posted and the bids were opened on October 23, 2013. Staff received four bids and the results are listed below:

CONTRACTOR	**Base Bid**	**Additive Alternates 1-3**	**Total Bid**	**SBE %**
GOODLAND LANDSCAPE CONSTRUCTION	$2,240,000	$119,800	$2,359,800	83.7
OLYMPIC LAND CONSTRUCTION	$2,485,450	$124,741	$2,610,191	70.6
SIERRA VALLEY CONSTRUCTION	$2,551,256	$115,373	$2,666,629	57.9
TRICON CONSTRUCTION	$2,742,940	$126,125	$2,869,065	13.6

The Engineer's Estimate for the base bid of this project was $2,226,715. SBE % is based on the base bid only.

Pursuant to City Code Section 3.60.020, it was determined that Goodland Landscape Construction, Inc. had the lowest, responsible base bid.

Financial Considerations:

There are sufficient funds in L19136500 to award the contract. Funding consists of $170,000 from Park Development Impact Fee (PIF) (Fund 3204), and $2,790,000 from Proposition 84 state grant (Fund 3704) which totals $2,960,000. The remaining project

funding covers potential construction change orders, design, project management, inspection services, building permit fees, contract management, labor compliance, special inspections, and material testing. Although development of parks creates an ongoing cost for park maintenance and utilities based on the size and design of the park, the annual maintenance cost for renovation of this existing park has already been covered in the Department of Parks and Recreation's operating budget for maintenance, water, and utility costs. Furthermore, the integration of automatic sprinklers and low maintenance/drought-resistant landscaping improvements as described in the Sustainability Section, will reduce ongoing maintenance and utilities expenses at this park site

Emerging Small Business Development (ESBD):

The selection of the contractor for this project followed City-established guidelines for inclusion of ESBD firms. At an SBE/EBE percentage total of 87.3%, Goodland Landscape Construction, Inc. and their subcontractors are above the City's required 20% ESBD rate.

Back to Report Table of Contents

Background:

McClatchy Park is a 15.2 acre community park located at 3500 5th Avenue in Fruitridge/Broadway Community Plan Area (PA5) Council District 5.

On April 10, 2008, the City Council adopted the *Parks and Recreation Safety Implementation Plan* (*PSIP*). As part of the *PSIP*, the City Council approved action plans for nine City parks to implement capital improvements and operational enhancements to make these parks positive, clean, vibrant, and safe environments for park users.

McClatchy Park was one of the nine selected park sites. Immediate improvements were recommended and were completed as Tier I improvements, including tree trimming, automatic parking lot gates, security fencing and park rule signage. To help ensure that these parks are an asset to their neighborhood, Tier II or longer-term planning projects were recommended. The master plan update was developed through extensive community meetings, and would be implemented as funding becomes available.

On March 24, 2009, the City Council approved the Master Plan Update as well as a Mitigated Negative Declaration with the Mitigation Reporting Plan.

In August 2012, the City Parks and Recreation Department received the executed agreement from the California Department of Parks and Recreation completing the award of $2,790,000 for McClatchy Park from the 2006 Parks Bond Act Statewide Park Development and Community Revitalization program (Proposition 84).

McClatchy Park has a rich and interesting history and will celebrate its 125 year anniversary in 2014. McClatchy Park was originally developed in 1889 by a streetcar company as an 8-acre picnic and entertainment amusement park among a mature oak grove and was called "Oak Park." Oak Park was the southern end of the streetcar line from Sacramento. It was created to increase ridership on the streetcars and attract people from Sacramento to purchase property in the newly developing Oak Park area, the same way that was done across America at the time in places like Coney Island, New York, and Santa Monica Pier in Los Angeles.

By 1895, a ballpark, a small zoo and a carousel were added to the list of amusements at Oak Park. In 1900, the amusement park was illuminated by lights provide with power from a newly built hydroelectric power plant on the upper American River, the Folsom Powerhouse. In 1903, the park owner, Electric Power and Light Company, erected the defining feature at the

northern entrance to the park on 35th St and 5th Ave., the Oak Park entrance arch. At that time a roller skating rink, a miniature railway ride, a cave of winds, and a three story wooden roller coaster called the "Scenic Railway" were added to the park. In 1911, the Oak Park neighborhood became part of the City of Sacramento.

In 1913, the park was renamed Joyland, and a swimming pool and perimeter fence were added to the amusement park. On June 21, 1920, tragedy struck the park and a fire destroyed most of the rides and buildings, including the wooden roller coaster. Joyland was partially reconstructed but it never came back to its full glory. This was due in large part to the introduction of the automobile and the development of newer attractions in the city, including William Land Park. In 1927, Joyland finally closed its gates for good. The various animals that were kept at the small park zoo were transferred to the newly developed William Land Park, as were all other animals kept at local parks, such as McKinley Park. Mr. and Mrs. Valentine McClatchy bought the 17 acre Joyland, and gifted the grounds to the City of Sacramento for a public park. This was done with the condition that the park would be named James McClatchy Park in honor of their father, the founder of the Sacramento Bee newspaper.

The McClatchy Park renovation project will cover 3.84 acres and include a children's theme playground based on the history of the 125-year-old park which began as an amusement park, and will include an entry archway which recalls the original "Oak Park" entrance. The playground will include playground equipment reminiscent of the original wooden roller coaster 'Scenic Railway,' a miniature railway, a streetcar with enhanced pavement to look like a trolley track, a small zoo of climbable life-size concrete animals, and a water spray area which looks like a carousel. The park renovation will also include additional concrete walkways, a concrete skate park, two tennis courts, one full-sized and one half-sized basketball courts, a drop shot court, a large picnic pavilion with picnic tables and group grill, individual picnic tables, drinking fountains, a low playground fence, three security cameras, solar pathway lighting, and a perimeter jogging path with fitness stations. Other improvements will include irrigation system upgrades, drainage improvements, low maintenance and water saving landscaping and shade trees, a butterfly garden with interpretive signs, and an interpretive sign on the history of McClatchy Park.

The existing amenities at McClatchy Park include small picnic areas, baseball/soccer fields, unlit softball field, swimming and wading pools, off-street parking lot, an amphitheater, and newly renovated restrooms. In 2012, the McClatchy Farmers' Market was added, as well as a 9-hole disc golf course constructed as a volunteer community project.

Back to Report Table of Contents

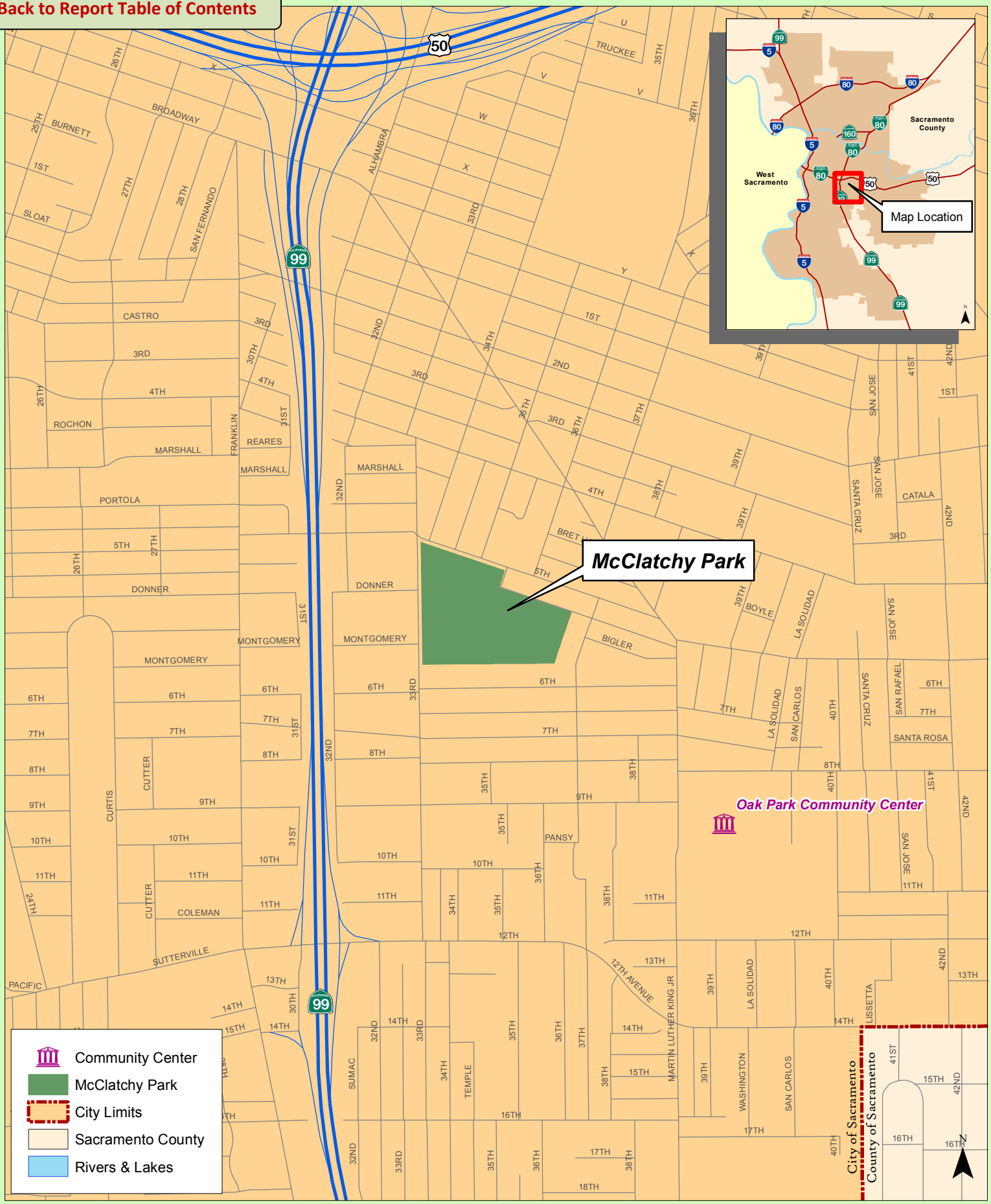

City of Sacramento
Department of Parks and Recreation
McClatchy Park

O:\GIS_Projects\Parks\Projects\PPDD\park_mcclatchy.mxd/pdf | November 29, 2007 jch

McCLATCHY COMMUNITY PARK

Back to Report Table of Contents

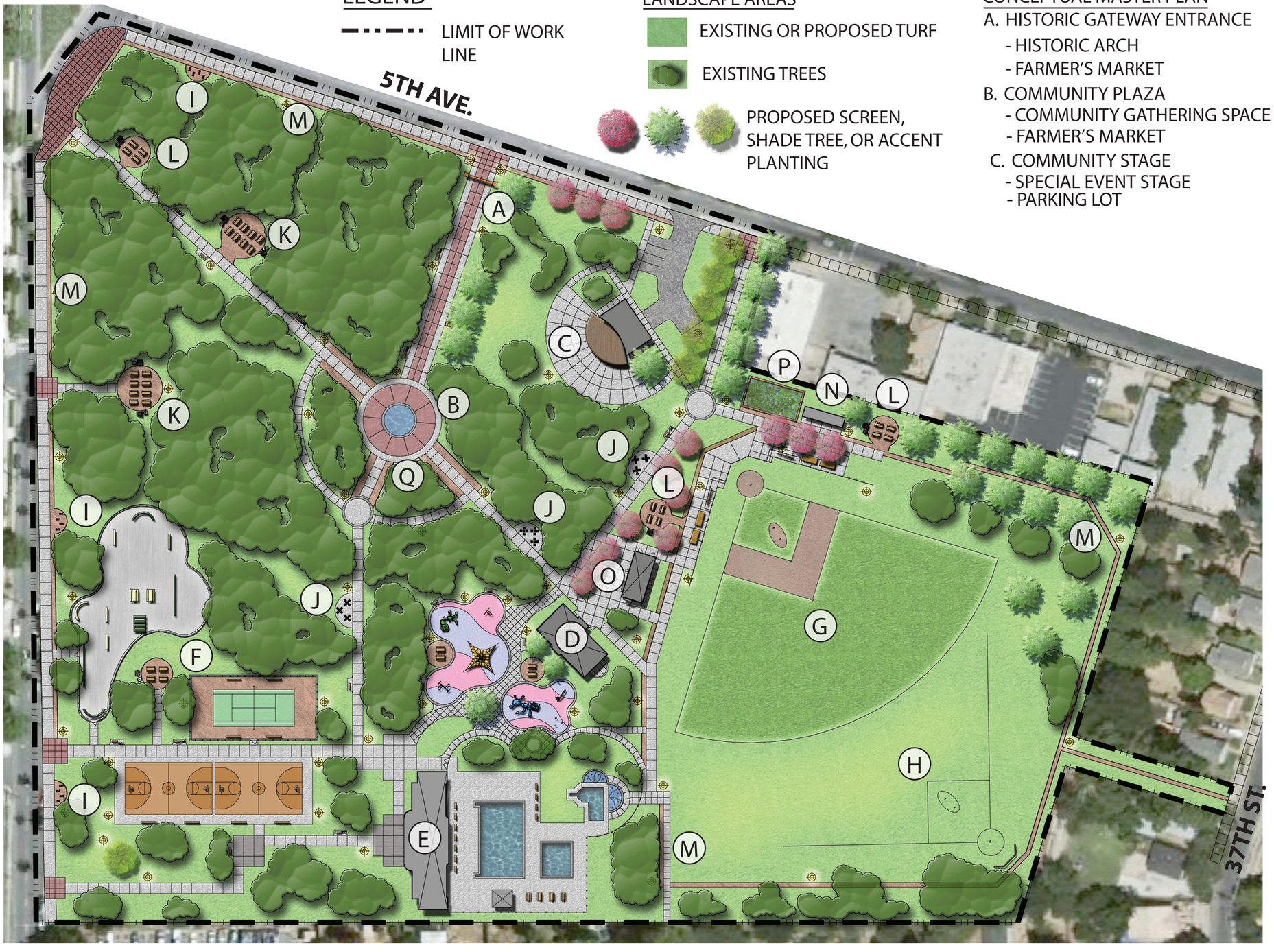

LEGEND

LIMIT OF WORK LINE

LANDSCAPE AREAS

EXISTING OR PROPOSED TURF

EXISTING TREES

PROPOSED SCREEN, SHADE TREE, OR ACCENT PLANTING

CONCEPTUAL MASTER PLAN

A. HISTORIC GATEWAY ENTRANCE
- HISTORIC ARCH
- FARMER'S MARKET

B. COMMUNITY PLAZA
- COMMUNITY GATHERING SPACE
- FARMER'S MARKET

C. COMMUNITY STAGE
- SPECIAL EVENT STAGE
- PARKING LOT

D. RECREATIONAL COMPLEX
- CLUB HOUSE
- 2 YR. - 5YR. PLAY EQUIPMENT
- 5 YR. - 12YR. PLAY EQUIPMENT

E. EXPANDED POOL FACILITY
- POOL BUILDING
- EXISTING POOL and PROPOSED WATER PLAY

F. TEEN and ADULT PLAY AREAS
- FULL-COURT BASKETBALL (2)
- FENCED TENNIS COURT (2)
- SKATE PARK

G. BASEBALL / SOFTBALL
- UPGRADED BASEBALL and SOFTBALL FIELDS

H. MULTI-USE PLAY FIELDS
- UPGRADED FIELDS
- BASEBALL
- SOCCER
- FOOTBALL

I. PAR COURSE EQUIPMENT

J. GAME TABLES

K. GROUP PICNIC AREAS
- BBQ GRILLS and TRASH RECEPTACLES

L. SMALL GROUP PICNIC AREAS
- BBQ GRILLS and TRASH RECEPTACLES

M. WALKING/JOGGING
- CONCRETE
- DECOMPOSED GRANITE

N. EXISTING COMMUNICATION TOWER

O. RESTROOM AND CONCESSION BUILDING

P. ENCLOSED DEMONSTRATION GARDEN

Q. POTENTIAL FUTURE COVERED FARMERS MARKET

NOTES:

1) LANDSCAPE AREAS INCLUDE SHRUBS AND GROUND-COVER PLANTINGS TO SUPPLEMENT EXISTING AND PROPOSED TREES

2) BIKE RACKS TO BE PLACED THROUGHOUT PARK

3) THE PARK IS 17 ACRES

0 25' 50' 100'

N

December 10, 2008

R H A A

MASTER PLAN

McClatchy Park Improvements

May 2, 2013

Callander Associates
Landscape Architecture, Inc.

Landscape Architecture
Park and Recreation Design

12.051 McClatchy Park © copyrighted 2013 Callander Associates Landscape Architecture, Inc.

CITY OF SACRAMENTO
DEPARTMENT OF PARKS AND RECREATION

City of Sacramento

Tax ID # if applicable:

Requires Council Approval: ☐ No ☒ YES **Meeting:** 1-7-2014

☐ **Real Estate** ☐ **Other Party Signature Needed** ☐ **Recording Requested**

General Information

Type: Public Project **PO Type:** **Formal Bid-Construction** **$ Not to Exceed:** $ 2,359,800.00	**Attachment: Original No.:** **Original Doc Number:**
Other Party: Goodland Landscape Construction	**Certified Copies of Document::**
Project Name: McClatchy Park Renovation	**Deed:** ☐ None ☐ Included ☐ Separate
Project Number: L19136500 Bid Transaction #: B190021004	E/SBE-DBE-M/WBE: 20%

Department Information

Department: Parks and Recreation — Division: PPDS

Project Mgr: DENNIS DAY — Supervisor: Gary Hyden

Contract Services: Tim Hopper — Date: 11-5-13 — Division Mgr:

PM Phone Number: 808-7633 — Org Number: 19001121

Comment: Base bid and additive alternates 1-3

Review and Signature Routing

Department	Signature or Initial	Date
Project Mgr:	**TH FOR Day**	12-9-13
Accounting:	**Sonja Jarvis**	
Contract Services:	**Tim Hopper**	11-6-13
Supervisor:	**Gary Hyden**	
Division Manager:	**NA**	

City Attorney	Signature or Initial	Date
City Attorney:	**Sheryl Patterson**	

☒ **Call Tim Hopper x8173** ☐ Notify for Pick Up

Authorization	Signature or Initial	Date
Combs, James Department Director:		
City Mgr: yes ☒ No ☐		

Contract Cover/Routing Form: Must Accompany ALL Contracts; however, is not part of the contract. (01-01-09)

For City Clerk Processing

Finalized:
Initial:
Date:

Imaged:
Initial:
Date:

Received:
(City Clerk Stamp Here)

Back to Report Table of Contents

DEPARTMENT OF
PARKS AND RECREATION

PARKS ADMINISTRATION
Park Planning and Development Services

CITY OF SACRAMENTO
CALIFORNIA

915 I STREET, 3RD Floor
SACRAMENTO, CA 95814

PH 916-808-7633
FX 916-808-8275

CONTRACT SPECIFICATIONS
FOR
MCCLATCHY PARK RENOVATION (L19136500)

Plans Attached

For Pre-Bid Information Call:
DENNIS DAY, Project Manager
(916) 808-7633

Bids to be received before
2:00 PM, Wednesday,
OCTOBER 23, 2013
Historic City Hall
915 I Street, 1st Floor
Sacramento, CA 95814

NEW PROGRAM REQUIREMENTS

EMERGING AND SMALL BUSINESS REQUIREMENTS: In order to meet City Emerging and Small Business Enterprise (E/SBE) project goals, it is recommended that the bidder attend a Small Business Development (E/SBD) program meeting. Meetings by appointment only. Call (916) 808-7223 to set up appointment if necessary. Economic Development Department, 915 I Street, New City Hall, 3rd Floor, Sacramento, CA 95814.

Estimated Construction Cost: $2,226,715.41-$2,378,647.51

Construction Time: EIGHTY(80) WORKING DAYS

TABLE OF CONTENTS

	Pages
Formal Bid Proposal Delivery Options	1 only
Invitation to Bid	1 - 2
ESBE Requirements	1 - 4
Apprenticeship Standards- link to www.dir.ca.gov	1 only
Non-Discrimination in Employee Benefits by City Contractors Ordinance	1- 9
Bid Proposal Document	1 – 7
Local Business Enterprise Preference Program- only projects <100K	1 - 3
Bid Proposal Guarantee	1 only
Minimum Qualifications Questionnaire	1- 6
Green Contracting Survey	1 - 3
Drug Free Work Place	1 only
Subcontractor Form	1 only
Contract	1- 17
Performance Bond	1 only
Payment Bond	1 only
Certificate of Insurance	1 only
Worker's Compensation Certification	1 only
Pay Request Application	1 only
Schedule of Values	1 - 5
Guarantee	1 only
Special Provisions	1 – 86
Plans	1- 58
Attachment A- Geotechnical Report	1 – 25
Attachment B- SWPP Details	1 – 86
Attachment C- Debris Ordinance	1 - 11

Any vendor and/or consultant submitting an official bid or proposal to the City of Sacramento City Clerk's Office, shall select one of the following delivery options. To ensure responsive receipt of bids and/or proposals within established submission deadlines, address information must exactly match one of the below options.

Effective April 17, 2009, the City of Sacramento's receiving hours are 8am to Noon Monday through Friday. If sending bids via Option 2 - Expedited Services, the bid must be delivered prior to noon or it will not be delivered until the following business day. The City of Sacramento is not responsible for the late receipt of bids and/or proposals where the proposer did not adhere to one of the available delivery options.

Option	Service Provider and/or Service Types	Address
1.	**United States Postal Service (USPS)** - Regular First Class - Certified or Return Receipt - Priority - Express	Sacramento City Clerk's Office *P.O. Box 122391* Sacramento, CA 95812-2391
2.	**Expedited Services – Receiving Hours are 8am to Noon Monday through Friday** - FedEx - UPS - DHL	Sacramento City Clerk's Office *915 I Street, Ste. 122391* Sacramento, CA 95814-2604
3.	**Personal Delivery** - Hand Delivery - Courier	Sacramento City Clerk's Office *Historic City Hall* *915 I Street, Ste. 116* Sacramento, CA 95814

Sealed Proposals will be received by the City Clerk of the City of Sacramento at the office of the City Clerk, City Hall, 1st Floor, located at 915 I Street between 9th and 10th Streets, up to the hour of **2:00 PM** on **October 23, 2013** and will be opened as soon thereafter as business allows, in the Council Chambers, City Hall for:

MCCLATCHY PARK RENOVATION (L19136500)

as set forth in the Contract Documents.

Proposals received and work performed thereunder shall comply with the requirements of Title 3 of the Sacramento City Code. Each Bid Proposal shall be accompanied by bid security of at least 10% of the sum of the Bid Proposal which conforms to the requirements of Section 7.0 of the Instructions to Bidders. The right to reject Proposals or to waive any error or omission in any Bid Proposal received is reserved by the City. Signed proposals shall be submitted on the printed forms contained in the Project Manual and enclosed in an envelope marked: Sealed Bid Proposal for:

MCCLATCHY PARK RENOVATION (L19136500)

EBE AND SBE CERTIFICATION STATEMENTS ARE DUE BY THE CLOSE OF BUSINESS TWO DAYS AFTER BID OPENING to:
Tim Hopper, Department of General Services, Procurement Division
5730 24TH Street, Bldg. 1, Sacramento, CA 95822
Phone: (916) 808-8173/ Fax: (916) 808-8266/ Email: thopper@cityofsacramento.org
Failure to submit the required ESBE information may be grounds for finding the bid non-responsive.

You can view and download the plans and Contract Documents from:

PLANET BIDS
http://www.planetbids.com/portal/portal.cfm?CompanyID=15300#

Subcontractors shall comply with the rates of wages currently established by the Director of Industrial Relations under provisions of Sections 1773 of the Labor Code of the State of California, a copy of which is on file in the office of the City Clerk. In accordance with Sacramento City Code Section 3.60.180 and Section 1771.5 of the California Labor Code, the payment of the general prevailing rate of per diem wages or the general prevailing rate of per diem wages for holiday and overtime is not required for any Public Construction project of $25,000 or less, or Public Maintenance project of $15,000 or less. The City of Sacramento has an approved Labor Compliance Program. **The City uses an electronic system for the submission of Labor Compliance Reports, which became effective May 1, 2007.** Each contractor and every lower-tier subcontractor submits certified payrolls and labor compliance documentation electronically at the discretion of and in the manner specified by the City of Sacramento.

Electronic submittal is via a web-based system, accessed on the World Wide Web by a web browser. Each contractor and subcontractor is given a Log On identification and password to access the City of Sacramento's reporting system.

Use of the system may entail additional data entry of weekly payroll information including; employee identification, labor classification, total hours worked and hours worked on this project, wage and benefit rates paid, etc. The contractor's payroll and accounting software might be capable of generating a 'comma delimited file' that will interface with the software.

Disseminate these provisions to every lower-tier subcontractor and vendor required to provide labor compliance documentation.

All questions regarding this Labor Compliance Program should be directed to the department's contracts staff or Contracts Services at (916) 808-5524.

Pursuant to Sacramento City Code Section 3.60.250, any Agreement awarded pursuant to this Invitation to Bid shall contain a provision permitting the substitution of securities for any monies withheld to ensure performance under the Agreement. The terms of such provisions shall be according to the requirements and the form required by the City.

Bid protests must be filled and maintained in accordance with the provisions of Sections 3.60.460 through 3.60.560 of the Sacramento City Code. Bid protests that do not comply with Sections 3.60.460 through 3.60.560 of the Sacramento City Code shall be invalid and shall not be considered. A bid protest fee of $750.00 is required at the time of filing to be considered valid in accordance with City of Sacramento Resolution No. 2003-231 dated April 29, 2003. As used herein, the term "bid protest" includes any bid protest that (1) claims that one or more bidders on this contract should be disqualified or rejected for any reason, or (2) contests a City staff recommendation to award this contract to a particular bidder, or (3) contests a City staff recommendation to disqualify or reject one or more bidders on this contract. A copy of Sections 3.60.460 through 3.60.560 of the Sacramento City Code may be obtained from the Project Manager, or from the City Clerk, located at 915 I Street, 1st Floor, Sacramento, CA 95814.

ESBE REQUIREMENTS

(City Construction Contracts no Federal Funds Used)

I. ESBE PARTICIPATION REQUIREMENT

On February 9, 1999, the Sacramento City Council adopted an Emerging and Small Business Development (ESBD) program to provide enhanced opportunities for the participation of small business enterprises (SBEs) and emerging business enterprises (EBEs) in the City's contracting and procurement activities. The ESBD program establishes an annual emerging and small business enterprise (ESBE) participation goal for City contracts, and authorizes City departments to require minimum ESBE participation levels in individual contracts so that the annual ESBE participation goal can be met. Under City Code section 3.60.270, when the bid specifications for a City contract establish a minimum participation level for ESBEs, no bidder on the contract shall be considered a responsive bidder unless its bid meets the minimum ESBE participation level required by the bid specifications.

The City has established **a minimum 20% participation level for ESBEs on this contract**. Pursuant to City code Section 3.60.270, no bidder on this contract shall be considered a responsive bidder unless its bid meets or exceeds this minimum participation level.

Bidders shall submit copies of their Certification as a SBE or EBE, and the SBE or EBE Certifications for each subcontractor, supplier, or other SBE or EBE business entity listed in the bidder's sealed proposal, within two (2) working days after being requested to do so by City. Failure to submit the requested ESBE information within this time period will be grounds for finding the bid non-responsive.

II. ESBE CERTIFICATION

A. A SBE designated in the bid must be certified as such by the State of California, Department of General Services, or by the City, prior to the time bids are received by the City.

B. An EBE designated in the bid must be certified as such by the City prior to the time bids are received by the City.

III. DETERMINATION OF ESBE PARTICIPATION LEVEL

A. ESBE Participation: The percent of ESBE participation shall be determined based on the dollar value of the work to be performed or supplies to be furnished by certified ESBEs designated in the bidder's Subcontractor and ESBE Participation Verification Form, relative to the total dollar amount of the bid.

B. Participation Credit: To receive credit for participation:(1) an ESBE subcontractor must be responsible for the execution of a distinct element of the work, must possess any license or certification required for the work, and must carry its

responsibility by actually performing, managing, or supervising the work without subcontracting or otherwise shifting any portion of the work to another subcontractor; and (2) an ESBE supplier must be furnishing materials, equipment, or supplies that the supplier sells as a recurring, although not necessarily primary, part of its business, and that are necessary for performance of the work.

C. ESBE Bidders: The dollar value listed for an ESBE bidder on the bidder's Subcontractor and ESBE Participation Verification Form shall include only the amount of work to be performed by the ESBE bidder, and shall not include any amount to be paid by the ESBE bidder for the cost of materials, equipment, or supplies.

D. Suppliers: Credit for an ESBE supplier of materials, equipment, or supplies is counted as one hundred (100) percent of the amount paid to the supplier for the material, equipment, or supplies. To receive this credit, ESBE suppliers must be listed on the bidder's Subcontractor and ESBE Participation Verification Form.

E. Subcontractors (including truckers): To receive credit for an ESBE subcontractor, the subcontractor must be listed on the bidder's Subcontractor and ESBE Participation Verification Form. The dollar value listed for a subcontractor on the bidder's Subcontractor and ESBE Participation Verification Form shall not include any amount to be paid to the subcontractor for the cost of materials, equipment, or supplies.

- Truckers: Credit for an ESBE trucker is counted as one hundred (100) percent of the amount paid to the trucker for trucking services, not including any amount paid to the trucker for the cost of any materials, equipment, or supplies being transported by the trucker.

IV. ESBE REQUIREMENTS FOR CONTRACTOR

A. ESBE Records: The Contractor shall maintain records of all subcontracts with certified ESBE subcontractors and records of materials purchased from certified ESBE suppliers for one (1) year after receiving final payment from the City. Such records shall show the name and business address of each ESBE subcontractor or supplier and the total dollar amount actually paid each ESBE subcontractor or supplier.

Not later than 30 days after completion of the work performed under the contract, a summary of these records shall be prepared, certified correct by the Contractor's authorized representative and furnished to the City. The Contractor shall provide such other information, records, reports, certifications or other documents as may be required by City, to determine compliance with any provision of the ESBD program or these specifications.

B. Performance of ESBE Subcontractors and Suppliers: The ESBEs listed by the Contractor shall perform the work and supply the materials, equipment, and supplies for which they are listed unless the Contractor has received prior written

authorization from the City to perform the work with other forces or to obtain the material, equipment, or supplies from other sources. Reasons for requesting such authorization would include:

1. The listed ESBE fails to execute a written contract based upon the general terms, conditions, plans, and specifications for the project.

2. The listed ESBE becomes bankrupt or insolvent.

3. The listed ESBE subcontractor fails to meet the bond requirements of the Contractor.

4. The work performed or the materials/equipment/supplies provided by the listed ESBE are unsatisfactory or are not in accordance with the plans and specifications, or the listed ESBE fails to perform its contractual obligations.

5. It would be in the best interest of the City.

C. Subcontractor Substitution: No substitution of an ESBE subcontractor shall be made at any time without compliance with the Subletting and Subcontracting Fair Practices Act. If an ESBE subcontractor is unable to perform successfully and is to be replaced, the Contractor shall make reasonable efforts to replace the original ESBE subcontractor with another certified ESBE subcontractor. The new ESBE subcontractor must be certified at the time of substitution.

D. Reporting and Utilization Requirements and Sanctions: Failure to provide specific information, records, reports, certifications, or any other documents required for compliance with these specifications, or failure to utilize one or more ESBEs in substantial compliance with the ESBE utilization indicated in the Contractor's bid (unless otherwise authorized by City as provided herein, or when such failure results from changes to the work approved by the City), shall be considered a breach of the contract, and a deduction may be made from the contract amount. The deduction shall be not more than ten (10) percent of the value of the work or materials/equipment/supplies that the subject ESBE(s) were listed to perform/provide in the Contractor's bid, and shall be deducted from any payment due to the Contractor. This is in addition to any deduction that may be made under any other provision of the contract, the Sacramento City Code, or State law.

E. Hearing and Review of Division Manager Decision: Prior to making a deduction pursuant to Section IV(D), above, the City shall provide written notice of the proposed deduction to the Contractor, and the Contractor may, not later than five (5) working days after receiving such notice, provide a written request to City for a hearing to contest the proposed deduction. Upon receipt of a timely written request from the Contractor, the City shall schedule a hearing before the Division Manager (as defined in the City's Standard Specifications for Public Construction), and written notice of the date, time and location of the hearing shall be provided to the Contractor not less than five (5) working days prior to the date of the hearing. The hearing shall be conducted in the manner specified in Section 4-8 of the

Standard Specifications, and the Division Manager shall prepare and forward to the Contractor a written decision as soon as practicable after the hearing. The Division Manager's decision shall be subject to review in accordance with the provisions of Section 4-9 of the Standard Specifications. Failure to request such review in compliance with the requirements set forth in Section 4-9 shall constitute acceptance of the Division Manager's decision by the Contractor.

The written notices and requests described above shall be provided by registered or certified mail (return receipt requested), by telecopy, by personal delivery, or by any other method that provides reliable evidence of the date of receipt. Written notice provided by telecopy shall be deemed received on the date that it is transmitted and transmission is confirmed by the transmitting machine. Written notice provided by personal delivery shall be deemed received on the date of delivery.

V. DEFINITIONS

A. Emerging Business Enterprise (EBE): The City shall certify EBEs utilizing the small business certification criteria and standards of the State of California, General Services Department, Office of Small Business and DVBE Services, that were in effect on December 1, 1998, provided that the size standard, industry by industry, shall be set at 50% of the State small business certification criteria and standards that were in effect on December 1, 1998.

B. Small Business Enterprise (SBE): The City shall certify SBEs utilizing the current small business certification criteria and standards of the State of California, General Services Department, Office of Small Business and DVBE Services. The City will also accept State certified SBEs.

C. The small business certification criteria and standards of the State of California, General Services Department, Office of Small Business and DVBE Services shall be used only for the purpose of determining whether a firm may receive certification as an EBE or SBE.

D. Contractor: The sole proprietorship, partnership, limited liability company, corporation, or any other business entity entering into a contract with the City of Sacramento.

E. Subcontractor: The sole proprietorship, partnership, limited liability company, corporation, or other business entity entering into a contract with the prime contractor to perform a portion of the work.

F. Supplier: The sole proprietorship, partnership, limited liability company, corporation, or other business entity entering into a contract with the prime contractor to provide materials, equipment, or supplies necessary for performance of the work.

CALIFORNIA LABOR CODE RELATING TO APPRENTICES ON PUBLIC WORKS PROJECTS

See following links: www.dir.ca.gov and/or www.leginfo.ca.gov

REQUIREMENTS OF THE NON-DISCRIMINATION IN EMPLOYEE BENEFITS CODE

INTRODUCTION

The Sacramento Non-Discrimination In Employee Benefits Code (the "Ordinance"), codified as Sacramento City Code Chapter 3.54, prohibits City contractors from discriminating in the provision of employee benefits between employees with spouses and employees with domestic partners, and between the spouses and domestic partners of employees.

APPLICATION

The provisions of the Ordinance apply to any contract or agreement (as defined below), between a Contractor and the City of Sacramento, in an amount exceeding $100,000.00. The Ordinance applies to that portion of a contractor's operations that occur: (i) within the City of Sacramento; (ii) on real property outside the City of Sacramento if the property is owned by the City or if the City has a right to occupy the property; or (iii) at any location where a significant amount of work related to a City contract is being performed.

The Ordinance does not apply: to subcontractors or subcontracts of any Contractor or contractors; to transactions entered into pursuant to cooperative purchasing agreements approved by the Sacramento City Council; to legal contracts of other governmental jurisdictions or public agencies without separate competitive bidding by the City; where the requirements of the ordinance will violate or are inconsistent with the terms or conditions of a grant, subvention or agreement with a public agency or the instructions of an authorized representative of any such agency with respect to any such grant, subvention or agreement; to permits for excavation or street construction; or to agreements for the use of City right-of-way where a contracting utility has the power of eminent domain.

DEFINITIONS

As set forth in the Ordinance, the following definitions apply:

"Contract" means an agreement for public works or improvements to be performed, or for goods or services to be purchased or grants to be provided, at the expense of the City or to be paid out of moneys deposited in the treasury or out of the trust money under the control or collected by the City. "Contract" also means a written agreement for the exclusive use ("exclusive use" means the right to use or occupy real property to the exclusion of others, other than the right reserved by the fee owner) or occupancy of real property for a term exceeding 29 days in any calendar year, whether by singular or cumulative instrument, (i) for the operation or use by others of real property owned or controlled by the City for the operation of a business, social, or other establishment or organization, including leases, concessions, franchises and easements, or (ii) for the City's use or occupancy of real property owned by others, including leases, concessions, franchises and easements.

"Contract" shall not include: a revocable at-will use or encroachment permit for the use of or encroachment on City property regardless of the ultimate duration of such permit; excavation, street construction or street use permits; agreements for the use of City right-of-way where a contracting utility has the power of eminent domain; or agreements governing the use of City property that constitute a public forum for activities that are primarily for the purpose of espousing or advocating causes or ideas and that are generally protected by the First Amendment to the United States Constitution or that are primarily recreational in nature.

"Contractor" means any person or persons, firm partnership or corporation, company, or combination thereof, that enters into a Contract with the City. "Contractor" does not include a public entity.

"Domestic Partner" means any person who has a currently registered domestic partnership with a governmental entity pursuant to state or local law authorizing the registration.

"Employee Benefits" means bereavement leave; disability, life, and other types of insurance; family medical leave; health benefits; membership or membership discounts; moving expenses; pension and retirement benefits; vacation; travel benefits; and any other benefit given to employees. "Employee benefits" shall not include benefits to the extent that the application of the requirements of this chapter to such benefits may be preempted by federal or state.

CONTRACTOR'S OBLIGATION TO PROVIDE THE CITY WITH DOCUMENTATION AND INFORMATION

Contractor shall provide the City with documentation and information verifying its compliance with the requirements of the Ordinance within ten (10) days of receipt of a request from the City. Contractors shall keep accurate payroll records, showing, for each City Contract, the employee's name, address, Social Security number, work classification, straight time pay rate, overtime pay rate, overtime hours worked, status and exemptions, and benefits for each day and pay period that the employee works on the City Contract. Each request for payroll records shall be accompanied by an affidavit to be completed and returned by the Contractor, as stated, attesting that the information contained in the payroll records is true and correct, and that the Contractor has complied with the requirements of the Ordinance. A violation of the Ordinance or noncompliance with the requirements of the Ordinance shall constitute a breach of contract.

EMPLOYER COMPLIANCE CERTIFICATE AND NOTICE REQUIREMENTS

(a) All contractors seeking a Contract subject to the Ordinance shall submit a completed Declaration of Compliance Form (attachment "A"), signed by an authorized representative, with each proposal, bid or application. The Declaration of Compliance shall be made a part of the executed contract, and will be made available for public inspection and copying during regular business hours.

(b) The Contractor shall give each existing employee working directing on a City contract, and (at the time of hire), each new employee, a copy of the notification provided as attachment "B."

(c) Contractor shall post, in a place visible to all employees, a copy of the notice provided as attachment "C."

DECLARATION OF COMPLIANCE
Equal Benefits Ordinance

Goodland Landscape Construction Inc.
Name of Contractor

2455 N. Naglee Road #402 Tracy CA 95391
Address

The above named contractor ("Contractor") hereby declares and agrees as follows:

1. I have read and understand the Requirements of the Non-Discrimination In Employee Benefits Code (the "Requirements") provided to me by the City of Sacramento ("City") in connection with the City's request for proposals or other solicitations for the performance of services, or for the provision of commodities, under a City contract or agreement ("Contract").

2. As a condition of receiving the City Contract, I agree to fully comply with the Requirements, as well as any additional requirements that may be specified in the City's Non-Discrimination in Employee Benefits Code codified at Chapter 3. 54 of the Sacramento City Code (the "Ordinance").

3. I understand, to the extent that such benefits are not preempted or prohibited by federal or state law, employee benefits covered by the Ordinance, are any of the following:

   a. Bereavement Leave
   b. Disability, life, and other types of insurance
   c. Family medical leave
   d. Health benefits
   e. Membership or membership discounts
   f. Moving expenses
   g. Pension and retirement benefits
   h. Vacation
   i. Travel benefits
   j. Any other benefit offered to employees

   I agree that should I offer any of the above listed employee benefits, that I will offer those benefits, without discrimination between employees with spouses and employees with domestic partners, and without discrimination between the spouses and domestic partners of such employees.

4. I understand that I will not be considered to be discriminating in the provision or application of employee benefits under the following conditions or circumstances:

DECLARATION OF COMPLIANCE
Equal Benefits Ordinance

a. In the event that the actual cost of providing a benefit to a domestic partner or spouse, exceeds the cost of providing the same benefit to a spouse or domestic partner of an employee, I will not be required to provide the benefit, nor shall it be deemed discriminatory, if I require the employee to pay the monetary difference in order to provide the benefit to the domestic partner or to the spouse.

b. In the event I am unable to provide a certain benefit, despite taking reasonable measures to do so, if I provide the employee with a cash equivalent, I will not be deemed to be discriminating in the application of that benefit.

c. If I provide employee benefits neither to employee's spouses nor to employee's domestic partners.

d. If I provide employee benefits to employees on a basis unrelated to marital or domestic partner status.

e. If I submit, to the Program Coordinator, written evidence of making reasonable efforts to end discrimination in employee benefits by implementing policies which are to be enacted before the first effective date after the first open enrollment process following the date the Contract is executed with the City.

   I understand that any delay in the implementation of such policies may not exceed one (1) year from the date the Contract is executed with the City, and applies only to those employee benefits for which an open enrollment process is applicable.

f. Until administrative steps can be taken to incorporate, in the infrastructure, nondiscrimination in employee benefits

   The time allotted for these administrative steps will apply only to those employee benefits for which administrative steps are necessary and may not exceed three (3) months from the date the Contract is executed with the City.

g. Until the expiration of a current collective bargaining agreement(s) where, in fact, employee benefits are governed by a collective bargaining agreement(s).

h. I take all reasonable measures to end discrimination in employee benefits by either requesting the union(s) involved agree to reopen the agreement(s) in order for me to take whatever steps are necessary to end discrimination in employee benefits or by my ending discrimination in employee benefits without reopening the collective bargaining agreement(s).

i. In the event I cannot end discrimination in employee benefits despite taking all reasonable measures to do so, I provide a cash equivalent to eligible employees for whom employee benefits (as listed previously), are not available.

Unless otherwise authorized in writing by the City Manager, I understand this cash equivalent must begin at the time the union(s) refuse to allow the collective bargaining agreement(s) to be reopened or no longer than three (3) months from the date the Contract is executed with the City.

5. I understand that failure to comply with the provisions of Section 4. (a) through 4. (i), above, will subject me to possible suspension and/or termination of this Contract for cause; repayment of any or all of the Contract amount disbursed by the City; debarment for future contracts until all penalties and restitution have been paid in full; deemed ineligible for future contracts for up to two (2) years; the imposition of a penalty, payable to the City, in the sum of $50.00 for each employee, for each calendar day during which the employee was discriminated against in violation of the provisions of the Ordinance.

6. I understand and do hereby agree to provide each current employee and, within ten (10) days of hire, each new employee, of their rights under the Ordinance. I further agree to maintain a copy of each such letter provided, in an appropriate file for possible inspection by an authorized representative of the City. I also agree to prominently display a poster informing each employee of these rights.

7. I understand that I have the right to request an exemption to the benefit provisions of the Ordinance when such a request is submitted to the Procurement Services Division, in writing with sufficient justification for resolution, prior to contract award.

   I further understand that the City may request a waiver or exemption to the provisions or requirements of the Ordinance, when only one contractor is available to enter into a contract or agreement to occupy and use City property on terms and conditions established by the City; when sole source conditions exist for goods, services, public project or improvements and related construction services; when there are no responsive bidders to the Ordinance requirements and the
   contract is for essential goods or services; when emergency conditions with public health and safety implications exist; or when the contract is for specialized legal services if in the best interest of the City.

8. In consideration of the foregoing, I shall defend, indemnify and hold harmless, the City, its officers and employees, against any claims, actions, damages, costs (including reasonable attorney fees), or other liabilities of any kind arising from any violation of the Requirements or of the Ordinance by
   me.

DECLARATION OF COMPLIANCE
Equal Benefits Ordinance

I declare under penalty of perjury under the laws of the State of California that the foregoing is true and correct, and that I am authorized to bind the Contractor to the provisions of this Declaration.

Lindsey Sherwood
Signature of Authorized Representative

10/23/13
Date

Lindsey Sherwood
Print Name

Sect/Treasurer
Title

YOUR RIGHTS UNDER THE CITY OF SACRAMENTO'S NON-DISCRIMINATION IN EMPLOYEE BENEFITS BY CITY CONTRACTORS ORDINANCE

On ..... (date), your employer (the "Employer") entered into a contract with the City of Sacramento (the "City") for ..... (contract details), and as a condition of that contract, agreed to abide by the requirements of the City's Non-Discrimination In Employee Benefits By City Contractors Ordinance (Sacramento City Code Section 3.54).

The Ordinance does not require the Employer to provide employee benefits. The Ordinance does require that if certain employee benefits are provided by the Employer, that those benefits be provided without discrimination between employees with spouses and employees with domestic partners, and without discrimination between the spouse or domestic partner of employees.

The Ordinance covers any employee working on the specific contract referenced above, but only for the period of time while those employees are actually working on this specific contract.

The included employee benefits are:

- Bereavement leave
- Disability, life and other types of insurance
- Family medical leave
- Health benefits
- Membership or membership discounts
- Moving expenses
- Pension and retirement benefits
- Vacation
- Travel benefits
- Any other benefits given to employees

(Employee Benefits does not include benefits that may be preempted by federal or state law.)

If you feel you have been discriminated or retaliated against by your employer in the terms and conditions of your application for employment, or in your employment, or in the application of these employee benefits, because of your status as an applicant or as an employee protected by the Ordinance, or because you reported a violation of the Ordinance, and after having exhausted all remedies with your employer,

You May . . .

- Submit a written complaint to the City of Sacramento, Contract Services Unit, containing the details of the alleged violation. The address is:

  City of Sacramento
  Contract Services Unit
  915 I St., 2nd Floor
  Sacramento, CA 95814

- Bring an action in the appropriate division of the Superior Court of the State of California against the Employer and obtain the following remedies:

  - Reinstatement, injunctive relief, compensatory damages and punitive damages

  - Reasonable attorney's fees and costs

YOUR RIGHTS UNDER THE CITY OF SACRAMENTO'S NON-DISCRIMINATION IN EMPLOYEE BENEFITS BY CITY CONTRACTORS ORDINANCE

If your employer provides employee benefits, they must be provided to those employees working on a City of Sacramento contract without discriminating between employees with spouses and employees with domestic partners.

The included employee benefits are:

- Bereavement leave
- Disability, life and other types of insurance
- Family medical leave
- Health benefits
- Membership or membership discounts
- Moving expenses
- Pension and retirement benefits
- Vacation
- Travel benefits
- Any other benefits given to employees

If you feel you have been discriminated against by your employer . . .

You May . . .

- Submit a written complaint to the City of Sacramento, Contract Services Unit, containing the details of the alleged violation. The address is:

  City of Sacramento
  Contract Services Unit
  915 I St., 2nd Floor
  Sacramento, CA 95814

- Bring an action in the appropriate division of the Superior Court of the State of California against the employer and obtain reinstatement, injunctive relief, compensatory damages, punitive damages and reasonable attorney's fees and costs.

Discrimination and Retaliation Prohibited.

If you feel you have been discriminated or retaliated against by your employer in the terms and conditions of your application for employment, or in your employment, because of your status as an applicant or as an employee protected by the Ordinance, or because you reported a violation of this Ordinance . . .

You May Also . . .

Submit a written complaint to the City of Sacramento, Contract Services Unit, at the same address, containing the details of the alleged violation.

BID PROPOSAL FORMS

PLEASE REMOVE AND

COMPLETE

THE FOLLOWING DOCUMENTS

AND

SUBMIT AS

THE BID PROPOSAL

PACKAGE

City of
SACRAMENTO
Parks and Recreation

B14190021004

MCCLATCHY PARK RENOVATIONS

(PN: L19136500)
(Addendum #2)

October 18, 2013

To all Potential Bidders:

Attached hereto are addenda items, which shall be incorporated into the request for proposal for above noted project. These changes shall be considered as part of the original documents, as if they were originally provided therein, and as such shall be used as contractual documents. All other terms, conditions, and specifications of the bid remain unchanged. Bidders must acknowledge receipt of this addendum prior to the hour and date specified in the bid request, or as amended, by one of the following methods:

(a) By acknowledging receipt, on the proposal form submitted; or
(b) By separate letter or telegram which includes a reference to the bid request and addendum number.

Failure to acknowledge receipt of this addendum in one of the above methods and cause acknowledgment to be received at the **Clerk's Office, 915 I Street, City Hall, 1st Floor, Sacramento, CA 95814-2671**, prior to the hour and date specified for receipt of bids, may result in rejection of your offer. If by virtue of this addendum you decide to change an offer already submitted, such change may be made by telegram or letter, provided such telegram or letter makes reference to the bid request number and this addendum, and is received prior to the opening hour and date specified.

For any contractual questions related to this Addendum, contact Tim Hopper at (916) 808-8173.

Very truly yours,

T Hopper

Tim Hopper
Contracts & Compliance Specialist
Department of General Services

Enclosure

Clerk's Office

c: Distribution List
Planholders

h:\documents\contract mgmt\mcclatchy park renovation_10-1-13\addendums\addendum 2\addendum #2ltr-parks.docx

Bid Number: B14190021004

ADDENDUM _#2_ DATES: October 18, 2013

McCLATCHY PARK RENOVATION
(PN: L19136500)

Addendum #2 includes:

Plan - Correction:

1. On sheet 10, Grading and Drainage Plan: replace Grading and Drainage Note #9 with the following revised note: "Grading operations and excavation will result in excess soil, which shall be removed from the project site at the Contractor's expense. The Contractor may propose during construction to adjust the grades of improvements to minimize export of soil, which must be approved by the City Project Manager/Landscape Architect, and which shall result in no additional cost to the City."

2. On sheet 15, Layout Plan: under Layout Legend, replaced Drinking Fountain description with the following: 'Drinking Fountain: Model # 440SM with Jug Filler, Accessible Hi-Low Pedestal Drinking fountain, by Most Dependable Fountain, Surface mounted. Contact Husbands Associates at (925) 426-5001. Install per detail 1/33. Color: Textured Pyrite, Quantity 2.

3. On sheet 17, Layout Plan: delete the following call out notes "ADA Parking Sign" and "Stripe accessible parking stalls as shown and provide detectable warning tiles and signage per City of Sacramento Standard Drawing No. T-90." These items are not required.

4. On sheet 15, Layout Plan: Post and Cable Fence location: refer to Layout Legend for Post and Cable fence line symbol, which is to be installed as shown on sheet 17, along the west and south side of new basketball court on 5th Ave., which is indicated on the plan by the Post and Cable Fence line symbol.

5. On sheet 35, Construction Details, Detail 6 Tennis Court Fencing: replace the Line Post note with the following: "Line Posts: 2-3/8", 0.65 lb./ ft., Sch. 40 galvanized steel. Terminal/Corner/Gate Posts, 4" Sch. 40 Galvanized Steel. Spacing to be no more than 10'-0" O.C."

Specification - Correction:

6. On Bid Item No. 32 Tennis Court Fencing to Install, replace paragraph C. Fabric with the following" "Fabric shall be galvanized steel, and as stated in Paragraph 10-38 and Section 31 of the Standard Specifications."

7. On Bid Item No. 38 Drinking Fountain to Install, replace the model number indicated with "Model # 440SM with Jug Filler".

8. On Additive Alternate Item No. A2 – Security Cameras and Signs to Install, replace item description paragraph with the following: "This items shall consist of furnishing, installing and testing **three (3)** Security Cameras which are to be installed on two (2) posts each with a camera surveillance sign in conformance with Section 34 and 38 of the Standard Specifications, the plans and the manufacture's specifications."

THE ORIGINAL BID DUE DATE OF OCTOBER 23, 2013, REMAINS THE SAME.

UNCHANGED PORTIONS OF THE PLANS AND SPECIAL PROVISIONS REMAIN IN EFFECT.

Cc: File

City of
SACRAMENTO
Parks and Recreation

MCCLATCHY PARK RENOVATIONS

(PN: L19136500)
(Addendum #1)

October 4, 2013

To all Potential Bidders:

Attached hereto are addenda items, which shall be incorporated into the request for proposal for above noted project. These changes shall be considered as part of the original documents, as if they were originally provided therein, and as such shall be used as contractual documents. All other terms, conditions, and specifications of the bid remain unchanged. Bidders must acknowledge receipt of this addendum prior to the hour and date specified in the bid request, or as amended, by one of the following methods:

(a) By acknowledging receipt, on the proposal form submitted; or
(b) By separate letter or telegram which includes a reference to the bid request and addendum number.

Failure to acknowledge receipt of this addendum in one of the above methods and cause acknowledgment to be received at the **Clerk's Office, 915 I Street, City Hall, 1st Floor, Sacramento, CA 95814-2671**, prior to the hour and date specified for receipt of bids, may result in rejection of your offer. If by virtue of this addendum you decide to change an offer already submitted, such change may be made by telegram or letter, provided such telegram or letter makes reference to the bid request number and this addendum, and is received prior to the opening hour and date specified.

For any contractual questions related to this Addendum, contact Tim Hopper at (916) 808-8173.

Very truly yours,

Tim Hopper
Contracts & Compliance Specialist
Department of General Services

Enclosure

Clerk's Office

c: Distribution List
Planholders

h:\documents\contract mgmt\mcclatchy park renovation_10-1-13\addendums\addendum 1\addendum #1ltr-parks.docx

Bid Number: B14190021004

ADDENDUM __1___DATE: OCTOBER 4, 2013

MCCLATCHY PARK RENOVATIONS

(PN: L19136500)

Item #1 – BID PROPOSAL GUARANTEE: The form has been amended to reflect correct bid opening location.

Item #2- BID PROPOSAL: The form has been amended to include "For City Only Use" box on page 6 of 7 of the bid proposal form.

THE ORIGINAL BID DUE DATE OF OCTOBER 23, 2013 REMAINS THE SAME.

This addendum is issued in conformance with the original plans and specifications. Unchanged portions of the plans and special provisions remain in effect.

KNOW ALL MEN BY THESE PRESENTS,

That we,_____

as Principal, and _____

a corporation duly organized under the laws of the State of _____ and duly licensed to become sole surety on bonds required or authorized by the State of California, as Surety, are held and firmly bound unto the City of Sacramento, hereinafter called the City, in the penal sum of ten percent (10%) of the (BASE OR LUMP SUM) Proposal of the Principal above named, or other amount as set forth in the Invitation to Bidders, submitted by said Principal to the City for the Work described below, for the payment of which sum in lawful money of the United States, well and truly to be made, we bind ourselves, our heirs, executors, administrators and successors, jointly and severally, firmly by these presents.

THE CONDITION OF THIS OBLIGATION IS SUCH
That whereas the Principal has submitted the above-mentioned Proposal to the City, for which Proposals are to be opened at the Department of City Clerk, City of Sacramento, located at **915 I SREET, HISTORIC City Hall, 2ND FLOOR HEARING ROOM, SACRAMENTO, CA 95814** up to the hour of 2:00 p.m. on **OCTOBER 23, 2013** for the Work specifically described as follows:

MCCLATCHY PARK RENOVATION (L19136500)

NOW, THEREFORE, if the aforesaid Principal is awarded the Contract and within the time and manner required under the Contract Documents, enters into a written Contract, in the prescribed form, in accordance with the Proposal, and files two (2) bonds with the City, one to guarantee faithful performance and the other to guarantee payment for labor and materials, and files the required insurance policies with the City, all as required by the Contract Documents or by law, then the obligation shall be null and void; otherwise it shall be and remain in full force and effect.

In the event suit is brought upon this bond by the Obligee and judgment is recovered, the Surety shall pay all costs incurred by the Obligee in such suit, including a reasonable attorney's fee to be fixed by the court, which sums shall be additional to the principal amount of this bond.

IN WITNESS THEREOF We have hereunto set our hands and seal this _____
day of _____ 20_____.

_____
(Contractor) (Seal)
By _____
Title _____

ORIGINAL APPROVED AS TO FORM:

_____
City Attorney

_____
(Surety)(Seal)
By _____
Title _____
Agent Name and Address _____
_____
Agent Phone # _____
Surety Phone # _____
California License # _____

TO THE HONORABLE CITY COUNCIL
SACRAMENTO, CALIFORNIA:

In compliance with the Contract Documents, the undersigned hereby proposes to furnish all required labor, materials, supervision, transportation, equipment, services, taxes and incidentals required for:

BID PROPOSAL

MCCLATCHY PARK RENOVATIONS

(PN: L19136500)

in the City and County of Sacramento, California.

The Work is to be done in strict conformity with the Contract Documents now on file in the Office of the City Clerk, for the following sum:

Item No.	Item Description	Estimated Quantity	Unit	Unit Price	Total
1	Site Clearing, Grubbing and Tree Removal	1	LS	$	$
2	Construction Staking	1	LS	$	$
3	Temporary Construction Fence to Install	1	LS	$	$
4	Demolition	1	LS	$	$
5	Erosion and Sediment Control for Sites 1 Acre and over	1	LS	$	$
6	Disc Golf Tee Signs and Goals to Relocate	1	LS	$	$
7	Site Grading	1	LS	$	$
8	Standard Manhole No. 3 (w/Trap and Sump) to Construct	3	EA	$	$
9	Catch Basin to Construct	1	LS	$	$
10	Play Area Drain to Construct	1	LS	$	$
11	4" PVC Drain Line to Place	1	LS	$	$
12	6" PVC Drain Line to Place	1	LS	$	$
13	8" PVC Drain Line to Place	1	LS	$	$
14	Electrical System to Install	1	LS	$	$

15	Potable Waterline to Install	1	LS	$	$
16	Aggregate Base to Place	1	LS	$	$
17	Concrete Pavement to Construct	1	LS	$	$
18	Asphalt Pavement to Place	1	LS	$	$
19	Basketball Court Pavement to Place	1	LS	$	$
20	Mister Area Pavement to Construct	1	LS	$	$
21	Sports Court Surfacing to Construct	1	LS	$	$
22	Concrete Track Banding to Construct	1	LS	$	$
23	Stabilized Decomposed Granite to Place	1	LS	$	$
24	6" Play Area Curb at Concrete Pavement to Construct	1	LS	$	$
25	12" Play Area Curb to Construct	1	LS	$	$
26	Basketball Court Curb to Construct	1	LS	$	$
27	Concrete Tennis Court Curb to Construct	1	LS	$	$
28	6" Concrete Mowband to Construct	1	LS	$	$
29	9" Concrete Mowband to Construct	1	LS	$	$
30	15" Concrete Mowband to Construct	1	LS	$	$
31	Play Area Ramps to Construct	2	EA	$	$
32	Basketball Court Striping to Install	1	LS	$	$
33	Tennis Court Fencing to Install	1	LS	$	$
34	Maintenance Gate to Install	1	LS	$	$
35	Tennis Court Gate to Install	1	LS	$	$

36	Post and Cable Fence to Install	1	LS	$	$
37	Play Area Fence to Install	1	LS	$	$
38	Drinking Fountains to Install	2	EA	$	$
39	Picnic Table to Install	6	EA	$	$
40	ADA Picnic Table to Install	2	EA	$	$
41	Serving Table to Install	1	EA	$	$
42	Game Table to Install	1	EA	$	$
43	Accessible Game Table to Install	1	EA	$	$
44	Small Grill to Install	1	EA	$	$
45	Group Grill to Install	1	EA	$	$
46	Bench to Install	11	EA	$	$
47	Backless Bench to Install	7	EA	$	$
48	Bike Racks to Install	6	EA	$	$
49	Trash Receptacle to Install	6	EA	$	$
50	Fitness Stations to Install	1	LS	$	$
51	Picnic Structure to Install	1	LS	$	$
52	Play Area Wood Fiber to Install	1	LS	$	$
53	Tot Lot Play Structure to Install	1	LS	$	$
54	Adventure Area Play Structure to Install	1	LS	$	$
55	Swings to Install	1	LS	$	$
56	Train Climber to Install	1	LS	$	$
56	Trolley Climber to Install	1	LS	$	$
57	Precast Independent Play Items to Install	1	LS	$	$
58	Rubber Mat Under Swings to Install	1	LS	$	$

59	Mister Area to Construct	1	LS	$	$
60	Play Area Rubber Surfacing to Place	1	LS	$	$
61	Basketball Goals to Install	1	LS	$	$
62	Drop Shot Goals to Install	1	LS	$	$
63	Tennis Court Nets & Posts to Install	1	LS	$	$
64	Skate Park to Construct	1	LS	$	$
65	Signage to Install	1	LS	$	$
66	Interpretive Signage to Install	3	EA	$	$
67	Automatic Irrigation System to Install	1	LS	$	$
68	15 Gallon Trees to Install	1	LS	$	$
69	24" Box Trees to Install	1	LS	$	$
70	Shrub & Groundcover Areas to Install	1	LS	$	$
71	Landscape Weed Fabric to Place	1	LS	$	$
72	Bark Mulch to Install	1	LS	$	$
73	Turf Hydroseed to Install	1	LS	$	$
74	Landscape Maintenance (90 Days)	3	LS	$	$
		Base	**Bid**	**Subtotal**	**$**

ADDITIVE ALTERNATE BID ITEMS

Item No.	Item Description	Estimated Quantity	Unit	Unit Price	Total
A1	Tot Area Shade Canopy to Install	1	LS	$	$
A2	Security Cameras to Install	2	EA	$	$
A3	Entry Arch to Install	1	LS	$	$

A4	Turf Sod to Place	1	LS	$	$
		Additive	**Alternates Subtotal**		**$**

Total Base Bid Items Plus Additive Alternates	**$**

CONTRACTOR NAME: _____ TOTAL $_____

If awarded the Agreement, the undersigned agrees to sign said Agreement and furnish the necessary surety bonds and insurance certificates within ten (10) days after receipt of the notice of award of Agreement, and to begin work within fifteen (15) days after receipt of the Notice to Proceed by the City.

It is understood that this Bid Proposal is based upon completion of the Work within a period of **EIGHTY (80) WORKING DAYS PLUS A NINETY (90) CALENDER DAY PLANT ESTABLISHMENT PERIOD,** commencing on the date set forth in the written Notice to Proceed issued by the City to the Contractor. The Contractor shall refer to Section 1.2 Completion Time of the Special Provisions for calculation of the completion date.

The Notice to Proceed for this project will be issued on March 15, 2014 with the intent that Construction operations will begin no later than April 1, 2014.

The architect's order of preference will be as follows; base bid first followed by additive alternates in chronological order.

In determining the amount bid by each bidder, the City shall disregard mathematical errors in addition, subtraction, multiplication, and division that appear obvious on the face of the Proposal. When such a mathematical error appears on the face of the Proposal, the City shall have the right to correct such error and to compute the total amount bid by said bidder on the basis of the corrected figure or figures.

When an item price is required to be set forth in the Proposal, and the total for the item set forth separately does not agree with a figure which is derived by multiplying the item price times the Engineer's estimate of the quantity of work to be performed for said item, the item price shall prevail over the sum set forth as the total for the item unless, in the sole discretion of the City, such a procedure would be inconsistent with the policy of the bidding procedure. The total paid for each such item of work shall be based upon the item price and not the total price. Should the Proposal contain only total price for the item and the item price is omitted, the City shall determine the item price by dividing the total price for the item by the Engineer's estimate of the estimated quantities of work to be performed as items of work.

If the Proposal contains neither the item price nor the total price for the item, then it shall be deemed incomplete and the Proposal shall be disregarded.

The undersigned has examined the location of the proposed Work, the local conditions at the place where the Work is to be done, is familiar with the Contract Documents and is familiar and expressly agrees to the liquidated damages provision of the Contract Documents.
The undersigned has checked carefully all of the foregoing figures and understands that the City of Sacramento will not be responsible for any errors or omissions on the part of the undersigned in making up this Bid Proposal.

Enclosed is Bid Proposal Guarantee, as required, consisting of a bidder's bond or other acceptable security for not less than ten percent (10%) of the amount Bid Proposal.

The undersigned agrees that all addenda received and acknowledged herein shall become a part of and be included in this Bid Proposal. This Bid Proposal includes the following addenda:

Add. # _____ DATE _____

Add. # _____ DATE _____

Add. # _____ DATE _____

NOTE: State whether your concern is a corporation, a co-partnership, private individual, or individuals doing business under a firm name.

_____

If the Bidder is a corporation, the Bid Proposal must be executed in the name of the corporation and must be signed by a duly authorized officer of the corporation.

If the Bidder is a partnership, the Bid Proposal must be executed in the name of the partnership and one of the partners must subscribe their signature thereto as the authorized representative of the partnership.

AMOUNT OF BID PROPOSAL GUARANTEE ENCLOSED:

($_____) not less than ten percent (10%) of amount Bid Proposal

FOR CITY USE ONLY

BID BOND SECURITY
- ☐ *Properly Signed*
- ☐ *Improperly Signed*
- ☐ *Not Included*
- ☐ *Not Required*

TYPE OF DEPOSIT
- ☐ *Bid Bond*
- ☐ *Cashier/Certified Check*
- ☐ *Other* _____

Initial: _____

CONTRACTOR:

By _____
(Signature)

_____
(Print or Type)

Title _____
Address _____
_____
Telephone No. _____
Fax No. _____
Date _____

EMAIL: _____

PLEASE PRINT CLEARLY AS BID RESULTS WILL BE SENT VIA EMAIL

Contractor's License No. _____ Type _____

Expiration Date _____

Tax I.D. Nos.- Fed. _____ State _____

City of Sacramento Business Operation Tax Certificate No. _____
(City will not award contract if Certificate Number is missing.)

Goodland Landscape Construction

CITY OF SACRAMENTO
Department of Parks and Recreation

REVISED BY ADDENDUM 1_10-4-13

TO THE HONORABLE CITY COUNCIL
SACRAMENTO, CALIFORNIA:

In compliance with the Contract Documents, the undersigned hereby proposes to furnish all required labor, materials, supervision, transportation, equipment, services, taxes and incidentals required for:

BID PROPOSAL

MCCLATCHY PARK RENOVATIONS

(PN: L19136500)

in the City and County of Sacramento, California.

The Work is to be done in strict conformity with the Contract Documents now on file in the Office of the City Clerk, for the following sum:

Item No.	Item Description	Estimated Quantity	Unit	Unit Price	Total
1	Site Clearing, Grubbing and Tree Removal	1	LS	$ 89000	$ 89000
2	Construction Staking	1	LS	$ 7100	$ 7100
3	Temporary Construction Fence to Install	1	LS	$ 10000	$ 10000
4	Demolition	1	LS	$ 110000	$ 110000
5	Erosion and Sediment Control for Sites 1 Acre and over	1	LS	$ 14100	$ 14100
6	Disc Golf Tee Signs and Goals to Relocate	1	LS	$ 3500	$ 3500
7	Site Grading	1	LS	$ 68700	$ 68700
8	Standard Manhole No. 3 (w/Trap and Sump) to Construct	3	EA	$ 3700	$ 11100
9	Catch Basin to Construct	1	LS	$ 22000	$ 22000
10	Play Area Drain to Construct	1	LS	$ 5490	$ 5490
11	4" PVC Drain Line to Place	1	LS	$ 2272	$ 2272
12	6" PVC Drain Line to Place	1	LS	$ 11000	$ 11000
13	8" PVC Drain Line to Place	1	LS	$ 19500	$ 19500
14	Electrical System to Install	1	LS	$ 132073	$ 132073

15	Potable Waterline to Install	1	LS	$ 11600	$ 11600
16	Aggregate Base to Place	1	LS	$ 39600	$ 39600
17	Concrete Pavement to Construct	1	LS	$ 124000	$ 124000
18	Asphalt Pavement to Place	1	LS	$ 38700	$ 38700
19	Basketball Court Pavement to Place	1	LS	$ 23800	$ 23800
20	Mister Area Pavement to Construct	1	LS	$ 23000	$ 23000
21	Sports Court Surfacing to Construct	1	LS	$ 9800	$ 9800
22	Concrete Track Banding to Construct	1	LS	$ 11600	$ 11600
23	Stabilized Decomposed Granite to Place	1	LS	$ 42300	$ 42300
24	6" Play Area Curb at Concrete Pavement to Construct	1	LS	$ 10600	$ 10600
25	12" Play Area Curb to Construct	1	LS	$ 17000	$ 17000
26	Basketball Court Curb to Construct	1	LS	$ 9900	$ 9900
27	Concrete Tennis Court Curb to Construct	1	LS	$ 11500	$ 11500
28	6" Concrete Mowband to Construct	1	LS	$ 42600	$ 42600
29	9" Concrete Mowband to Construct	1	LS	$ 6100	$ 6100
30	15" Concrete Mowband to Construct	1	LS	$ 2220	$ 2220
31	Play Area Ramps to Construct	2	EA	$ 2500	$ 5000
32	Basketball Court Striping to Install	1	LS	$ 1600	$ 1600
33	Tennis Court Fencing to Install	1	LS	$ 22000	$ 22000
34	Maintenance Gate to Install	1	LS	$ 2200	$ 2200
35	Tennis Court Gate to Install	1	LS	$ 1441	$ 1441

36	Post and Cable Fence to Install	1	LS	$ 36,86	$ 36,86
37	Play Area Fence to Install	1	LS	$ 298854	$ 298854
~~38~~	~~Drinking Fountains to Install~~	~~2~~	~~EA~~	~~$ 5300~~	~~$ 10600~~
39	Picnic Table to Install	6	EA	$ 2350	$ 14100
40	ADA Picnic Table to Install	2	EA	$ 2400	$ 4800
41	Serving Table to Install	1	EA	$ 1400	$ 1400
42	Game Table to Install	1	EA	$ 2570	$ 2570
43	Accessible Game Table to Install	1	EA	$ 2600	$ 2600
44	Small Grill to Install	1	EA	$ 600	$ 600
45	Group Grill to Install	1	EA	$ 4700	$ 4700
46	Bench to Install	11	EA	$ 1400	$ 15400
47	Backless Bench to Install	7	EA	$ 1550	$ 10850
48	Bike Racks to Install	6	EA	$ 450	$ 2700
49	Trash Receptacle to Install	6	EA	$ 1000	$ 6000
50	Fitness Stations to Install	1	LS	$ 25400	$ 25400
51	Picnic Structure to Install	1	LS	$ 37000	$ 37000
52	Play Area Wood Fiber to Install	1	LS	$ 20000	$ 20000
53	Tot Lot Play Structure to Install	1	LS	$ 92400	$ 92400
54	Adventure Area Play Structure to Install	1	LS	$ 245190	$ 245190
55	Swings to Install	1	LS	$ 9912	$ 9912
56	Train Climber to Install	1	LS	$ 2520	$ 2520
56	Trolley Climber to Install	1	LS	$ 1900	$ 1900
57	Precast Independent Play Items to Install	1	LS	$ 82500	$ 82500
58	Rubber Mat Under Swings to Install	1	LS	$ 7500	$ 7500

59	Mister Area to Construct	1	LS	$ 92900	$ 92900
60	Play Area Rubber Surfacing to Place	1	LS	$ 67440	$ 67440
61	Basketball Goals to Install	1	LS	$ 15000	$ 15000
62	Drop Shot Goals to Install	1	LS	$ 7792	$ 7792
63	Tennis Court Nets & Posts to Install	1	LS	$ 5000	$ 5000
64	Skate Park to Construct	1	LS	$ 284740	$ 284740
65	Signage to Install	1	LS	$ 1350	$ 1350
66	Interpretive Signage to Install	3	EA	$ 1100	$ 3300
67	Automatic Irrigation System to Install	1	LS	$ 103000	$ 103000
68	15 Gallon Trees to Install	1	LS	$ 13300	$ 13300
69	24" Box Trees to Install	1	LS	$ 4600	$ 4600
70	Shrub & Groundcover Areas to Install	1	LS	$ ~~3700~~ 14000 (LS)	$ ~~3700~~ 14000 (LS)
71	Landscape Weed Fabric to Place	1	LS	$ 3700	$ 3700
72	Bark Mulch to Install	1	LS	$ 7500	$ 7500
73	Turf Hydroseed to Install	1	LS	$ 12700	$ 12700
74	Landscape Maintenance (90 Days)	3	LS	$ 2700	$ 8100
		Base	Bid	Subtotal	$2,240,000

ADDITIVE ALTERNATE BID ITEMS

Item No.	Item Description	Estimated Quantity	Unit	Unit Price	Total
A1	Tot Area Shade Canopy to Install	1	LS	$ 36800	$ 36800
A2	Security Cameras to Install	2	EA	$ 17500	$ 35000
A3	Entry Arch to Install	1	LS	$ 48000	$ 48000

A4	Turf Sod to Place	1	LS	$ 27300	$ 27300
		Additive	Alternates Subtotal		$147100

Total Base Bid Items Plus Additive Alternates	2,387,100 ~~$2,240,000~~

CONTRACTOR NAME: Goodland Landscape Constr. Inc TOTAL $ 2,387,100

If awarded the Agreement, the undersigned agrees to sign said Agreement and furnish the necessary surety bonds and insurance certificates within ten (10) days after receipt of the notice of award of Agreement, and to begin work within fifteen (15) days after receipt of the Notice to Proceed by the City.

It is understood that this Bid Proposal is based upon completion of the Work within a period of **EIGHTY (80) WORKING DAYS PLUS A NINETY (90) CALENDER DAY PLANT ESTABLISHMENT PERIOD,** commencing on the date set forth in the written Notice to Proceed issued by the City to the Contractor. The Contractor shall refer to Section 1.2 Completion Time of the Special Provisions for calculation of the completion date.

The Notice to Proceed for this project will be issued on March 15, 2014 with the intent that Construction operations will begin no later than April 1, 2014.

The architect's order of preference will be as follows; base bid first followed by additive alternates in chronological order.

In determining the amount bid by each bidder, the City shall disregard mathematical errors in addition, subtraction, multiplication, and division that appear obvious on the face of the Proposal. When such a mathematical error appears on the face of the Proposal, the City shall have the right to correct such error and to compute the total amount bid by said bidder on the basis of the corrected figure or figures.

When an item price is required to be set forth in the Proposal, and the total for the item set forth separately does not agree with a figure which is derived by multiplying the item price times the Engineer's estimate of the quantity of work to be performed for said item, the item price shall prevail over the sum set forth as the total for the item unless, in the sole discretion of the City, such a procedure would be inconsistent with the policy of the bidding procedure. The total paid for each such item of work shall be based upon the item price and not the total price. Should the Proposal contain only total price for the item and the item price is omitted, the City shall determine the item price by dividing the total price for the item by the Engineer's estimate of the estimated quantities of work to be performed as items of work.

If the Proposal contains neither the item price nor the total price for the item, then it shall be deemed incomplete and the Proposal shall be disregarded.

The undersigned has examined the location of the proposed Work, the local conditions at the place where the Work is to be done, is familiar with the Contract Documents and is familiar and expressly agrees to the liquidated damages provision of the Contract Documents.
The undersigned has checked carefully all of the foregoing figures and understands that the City of Sacramento will not be responsible for any errors or omissions on the part of the undersigned in making up this Bid Proposal.

Enclosed is Bid Proposal Guarantee, as required, consisting of a bidder's bond or other acceptable security for not less than ten percent (10%) of the amount Bid Proposal.

The undersigned agrees that all addenda received and acknowledged herein shall become a part of and be included in this Bid Proposal. This Bid Proposal includes the following addenda:

Add. # 1 DATE 10/4/13
Add. # 2 DATE 10/18/13
Add. # _____ DATE _____

NOTE: State whether your concern is a corporation, a co-partnership, private individual, or individuals doing business under a firm name.

_____

If the Bidder is a corporation, the Bid Proposal must be executed in the name of the corporation and must be signed by a duly authorized officer of the corporation.

If the Bidder is a partnership, the Bid Proposal must be executed in the name of the partnership and one of the partners must subscribe their signature thereto as the authorized representative of the partnership.

AMOUNT OF BID PROPOSAL GUARANTEE ENCLOSED:

($ 10%) not less than ten percent (10%) of amount Bid Proposal

FOR CITY USE ONLY

BID BOND SECURITY
- ☐ *Properly Signed*
- ☐ *Improperly Signed*
- ☐ *Not Included*
- ☐ *Not Required*

TYPE OF DEPOSIT
- ☑ *Bid Bond*
- ☐ *Cashier/Certified Check*
- ☐ *Other* _____

Initial: _____

CONTRACTOR:
By Lindsey Sherwood
(Signature)
Lindsey Sherwood
(Print or Type)
Title Sect/Treasurer
Address 2455 N. Naglee Rd #402
Tracy CA 95391
Telephone No. 209.835.9906
Fax No. 209.835.9554
Date 10/23/13
EMAIL: lindsey@constructionaffairs.com

PLEASE PRINT CLEARLY AS BID RESULTS WILL BE SENT VIA EMAIL

Contractor's License No. 716914 Type A+C27

Expiration Date 1/31/2014

Tax I.D. Nos.-Fed. 68-0367954 State CA

City of Sacramento Business Operation Tax Certificate No. 227733
(City will not award contract if Certificate Number is missing.)

CALIFORNIA ALL-PURPOSE ACKNOWLEDGMENT

State of California

County of San Joaquin

On 10/23/13 (Date) before me, Dena Wortham, Notary Public (Here Insert Name and Title of the Officer)

personally appeared Lindsay Sherwood (Name(s) of Signer(s))

who proved to me on the basis of satisfactory evidence to be the person(s) whose name(s) is/are subscribed to the within instrument and acknowledged to me that he/she/they executed the same in his/her/their authorized capacity(ies), and that by his/her/their signature(s) on the instrument the person(s), or the entity upon behalf of which the person(s) acted, executed the instrument.

DENA WORTHAM
Commission # 1885616
Notary Public - California
San Joaquin County
My Comm. Expires Apr 11, 2014

I certify under PENALTY OF PERJURY under the laws of the State of California that the foregoing paragraph is true and correct.

WITNESS my hand and official seal.

Signature: Dena Wortham (Signature of Notary Public)

Place Notary Seal Above

OPTIONAL

Though the information below is not required by law, it may prove valuable to persons relying on the document and could prevent fraudulent removal and reattachment of this form to another document.

Description of Attached Document

Title or Type of Document: _____

Document Date: _____ Number of Pages: _____

Signer(s) Other Than Named Above: _____

Capacity(ies) Claimed by Signer(s)

Signer's Name: _____

☐ Corporate Officer — Title(s): _____

☐ Individual

☐ Partner — ☐ Limited ☐ General

☐ Attorney in Fact

☐ Trustee

☐ Guardian or Conservator

☐ Other: _____

Signer Is Representing: _____

RIGHT THUMBPRINT OF SIGNER
Top of thumb here

Signer's Name: _____

☐ Corporate Officer — Title(s): _____

☐ Individual

☐ Partner — ☐ Limited ☐ General

☐ Attorney in Fact

☐ Trustee

☐ Guardian or Conservator

☐ Other: _____

Signer Is Representing: _____

RIGHT THUMBPRINT OF SIGNER
Top of thumb here

© 2009 National Notary Association • NationalNotary.org • 1-800-US NOTARY (1-800-876-6827)

Item #5907

LOCAL BUSINESS ENTERPRISE (LBE) PREFERENCE PROGRAM REQUIREMENTS

(City Contracts, no Federal Funds Used)

I. LBE PREFERENCE PROGRAM

On April 3, 2012, the Sacramento City Council adopted a Local Business Enterprise Preference (LBE) Program to provide enhanced opportunities for the participation of local business enterprises (LBEs) in the City's contracting and procurement activities.

The LBE Program provides for a two percent (2%) preference on all City procurement opportunities under $100,000. For professional service contracts only, this preference also applies to procurement opportunities of $100,000 or more.

A bid or quotation submitted by a firm that is located within Sacramento city and/or the unincorporated county of Sacramento will receive a two percent (2%) bid evaluation preference for the purpose of determining the lowest responsible bidder. If, after applying the 2% bid evaluation preference, the bid of an LBE firm receiving such preference is determined to be the lowest responsible bid, the award will be made for the actual amount bid.

Bidders shall submit proof to the City demonstrating that the businesses in compliance will all applicable laws relating to licensing and is not delinquent on any City of Sacramento or County of Sacramento taxes, permits, or fees.

II. LBE QUALIFICATION

A. A LBE designated in the bid must be qualified as a LBE prior to the time bids are received.

B. Local Business Enterprise means a business enterprise, including but not limited to, a sole proprietorship, partnership, limited liability company, corporation, or any other business entity that has a legitimate business presence in the city or unincorporated county of Sacramento. Evidence of legitimate business presence in the city or unincorporated county of Sacramento shall include:

1. Having a current City of Sacramento Business Operation Tax or County of Sacramento Business License; and
2. Having either of the following types of offices or workspace operating legally within the city or unincorporated county of Sacramento:
    a. The LBE's principle business office or workspace; or
    b. The LBE's regional, branch or satellite office with at least one full time employee located in the city or unincorporated county of Sacramento.

C. A LBE must provide a physical address for the basis of location. This excludes P.O. Box addresses.

D. A LBE must provide a current copy of the City of Sacramento Business Operations Tax Certificate and/or County of Sacramento Business License.

III. APPLICATION OF LBE PREFERENCE

A. When applying the LBE preference to a Bid, the preference shall apply to the Bid price solely for Bid evaluation purposes such that the total price bid by a Local Business shall be reduced by two percent (2%) of the amount bid by that Local Business, and the reduced Bid amount shall be deemed the amount bid by that bidder. The Contract price shall in all events be the amount Bid by the successful bidder awarded the Contract.

B. When applying the LBE preference to a Proposal, the preference shall apply in the form of additional points to the Proposal's final score such that the score awarded to a Proposal submitted by a Local Business is increased by two percent (2%) of the total possible evaluation points.

C. The LBE preference can be applied to Bids and Proposals in addition to the City of Sacramento Emerging and Small Business Development five percent (5%) preference program. Any bid or quotation submitted by a contractor that is certified as a Small Business Enterprise (SBE) or that is certified as an Emerging Business Enterprise (EBE) by the City of Sacramento, receives a five percent (5%) bid evaluation preference for the purpose of determining the lowest responsible bidder.

D. **The LBE preference shall apply to all City procurement opportunities under $100,000 and professional service contracts of $100,000 or more**

IV. DEFINITIONS

A. Local Business Enterprise (LBE): A business enterprise, including but not limited to, a sole proprietorship, partnership, limited liability company, corporation, or any other business entity that has a legitimate business presence in the city or unincorporated county of Sacramento.

B. Emerging Business Enterprise (EBE): The City shall certify EBEs utilizing the small business certification criteria and standards of the State of California, General Services Department, Office of Small Business Certification and Resources, that were in effect on December 1, 1998 provided that the size standard, industry by industry, shall be set at 50% of the State small business certification criteria and standards that were in effect on December 1, 1998.

C. Small Business Enterprise (SBE): The City shall certify SBEs utilizing the small business certification criteria and standards of the State of California, General Services Department, Office of Small Business Certification and Resources. The City will also accept State certified SBEs.

D. Proposal: Any response to a City solicitation for Proposals or Qualifications.

E. Bid: Any response to a City solicitation for bids.

LOCAL BUSINESS ENTERPRISE (LBE) PREFERENCE PROGRAM

NOTE: Proposers must provide responses to the following items. Failure to provide a response to each of the items in this section may be grounds for rejection of the proposal.

1. LBE TWO PERCENT (2%) BID EVALUATION PREFERENCE

On April 3, 2012, the Sacramento City Council adopted a Local Business Enterprise Preference program to provide enhanced opportunities for the participation of local business enterprises (LBEs) in the City's contracting and procurement activities.[1] A bid or quotation submitted by a firm that is located within Sacramento city and/or the unincorporated county of Sacramento will receive a two percent (2%) bid evaluation preference for the purpose of determining the lowest responsible bidder. If, after applying the 2% bid evaluation preference, the bid of an LBE firm receiving such preference is determined to be the lowest responsible bid, the award will be made for the actual amount bid. To receive this bid evaluation preference, a firm must be a qualified as a LBE prior to the time bids are received.

Local Business Enterprise means a business enterprise, including but not limited to, a sole proprietorship, partnership, limited liability company, corporation, or other business entity that has a legitimate business presence in the city or unincorporated county of Sacramento. Evidence of legitimate business presence in the city or unincorporated county of Sacramento shall include:

1. Having a current City of Sacramento Business Operation Tax or County of Sacramento Business License; and
2. Having either of the following types of offices or workspace operating legally within the city or unincorporated county of Sacramento:
   a. The LBE's principle business office or workspace; or
   b. The LBE's regional, branch or satellite office with at least one full time employee located in the city or unincorporated county of Sacramento.

A. LOCAL BUSINESS ENTERPRISE (LBE)

Is the firm submitting the bid qualified as a local business enterprise? Check the appropriate box below:

☐ **YES** - the firm submitting the bid is qualified as a local business enterprise.

☒ **NO** - the firm submitting the bid is not qualified as a local business enterprise.

If the response to the above is YES, provide the City of Sacramento Business Operations Tax Certificate Number and/or County of Sacramento Business License Number:

N/A

If the response to the above is YES, provide a current copy of the City of Sacramento Business Operations Tax Certificate and/or County of Sacramento Business License.

If the response to the above is YES, provide business office or workspace address*:

N/A

* Address must be a physical address for the basis of location, this excludes P.O. Box addresses.

N/A

[1] The LBE Program provides for a two percent (2%) preference on all City procurement opportunities under $100,000. For professional service contracts only, this preference also applies to procurement opportunities of $100,000 or more.

MINIMUM QUALIFICATIONS QUESTIONNAIRE

Sacramento City Code Section 3.60.020 authorizes the Sacramento City Council to adopt standard minimum qualifications for bidders on competitively bid public works construction projects, and requires, among other provisions, that a bidder meet such minimum qualifications at the time of bid opening in order to bid. On July 31, 2007, the City Council adopted Resolution No. 2007-574 establishing these standard minimum qualifications. Pursuant to City Code section 3.60.020, a bidder failing to meet these minimum qualifications at the time of bid opening shall not be considered a responsible bidder for purposes of bidding on the subject project.

All bidders must demonstrate compliance with the minimum qualifications established by Resolution No. 2007-574 by completing all of the questions contained in this questionnaire. Bidder responses shall be limited to those operating business units, offices, branches and/or subsidiary divisions of the bidder that will be involved with the performance of any project work if awarded the contract. If a bidder answers "yes" to any single question, fails to submit a fully completed questionnaire, or submits false information, this will result in a determination that the minimum qualifications are not met, and the bidder shall not be considered a qualified bidder for purposes of bidding on this contract. If two or more entities submit a bid on a contract as a Joint Venture, each entity within the Joint Venture must separately meet these minimum qualifications for the Joint Venture to be considered a qualified bidder.

The City of Sacramento ("City") shall make its determination on the basis of the submitted questionnaire, as well as any relevant information that is obtained from others or as a result of investigation by the City. While it is the intent of this questionnaire to assist the City in determining whether bidders possess the minimum qualifications necessary to submit bids on the City's competitively bid public works construction contracts, the fact that a bidder submits a questionnaire demonstrating that it meets these minimum qualifications shall not in any way limit or affect the City's ability to: (1) review other information contained in the bid submitted by the bidder, and additional relevant information, and determine whether the contractor is a responsive and/or responsible bidder; or (2) establish pre-qualification requirements for a specific contract or contracts.

By submitting this questionnaire, the bidder consents to the disclosure of its questionnaire answers: (i) to third parties for purposes of verification and investigation; (ii) in connection with any protest, challenge or appeal of any action taken by the City; and (iii) as required by any law or regulation, including without limitation the California Public Records Act (Calif. Gov't Code sections 6250 et seq.). Each questionnaire must be signed under penalty of perjury in the manner designated at the end of the form, by an individual who has the legal authority to bind the bidder submitting the questionnaire. If any information provided by a bidder becomes inaccurate, the bidder shall immediately notify the City and provide updated accurate information in writing, under penalty of perjury.

FOR CITY CLERK USE ONLY

RESOLUTION NO.: 2007-574

DATE ADOPTED: July 31, 2007

QUESTIONNAIRE

NOTICE: **For firms that maintain other operating business units, offices, branches and/or subsidiary divisions that will not be involved with the performance of any project work if the firm is awarded the contract, references hereafter to "your firm" shall mean only those operating business units, offices, branches and/or subsidiary divisions that will be involved with the performance of any project work.**

All of the following questions regarding "your firm" refer to the firm (corporation, partnership or sole proprietor) submitting this questionnaire, as well as any firm(s) with which any of your firm's owners, officers, or partners are or have been associated as an owner, officer, partner or similar position within the last five years

The firm submitting this questionnaire shall not be considered a responsible bidder if the answer to any of these questions is "yes", or if the firm submits a questionnaire that is not fully completed or contains false information.

1. **Classification & Expiration Date(s) of California** Contractor's License Number(s) held by firm:

   716914 A and C-27 1/31/2014

2. Has a contractor's license held by your firm and/or any owner, officer or partner of your firm been revoked at anytime in the last five years?

   ☐ Yes ☑ No

3. Within the last five years, has a surety firm completed a contract on your firm's behalf, or paid for completion of a contract to which your firm was a party, because your firm was considered to be in default or was terminated for cause by the project owner?

   ☐ Yes ☑ No

4. At the time of submitting this minimum qualifications questionnaire, is your firm ineligible to bid on or be awarded a public works contract, or perform as a subcontractor on a public works contract, pursuant to either California Labor Code section 1777.1 (prevailing wage violations) or Labor Code section 1777.7 (apprenticeship violations)?

   ☐ Yes ☑ No

5. At any time during the last five years, has your firm, or any of its owners, officers or partners been convicted of a crime involving the awarding of a contract for a government construction project, or the bidding or performance of a government contract?

   ☐ Yes ☑ No

FOR CITY CLERK USE ONLY

RESOLUTION NO.: 2007-574

DATE ADOPTED: July 31, 2007

6. Answer either subsection A or B, as applicable:

A. Your firm has completed three or more government construction contracts in Sacramento County within the last five years: Within those five years, has your firm been assessed liquidated damages on three or more government construction contracts in Sacramento County for failure to complete contract work on time?

NOTE: If there is a pending administrative or court action challenging the assessment of liquidated damages on a government contract within the last five years, you need not include that contract in responding to this question.

☐ Yes ☒ No ☐ Not applicable

OR

B. Your firm has not completed at least three government construction contracts in Sacramento County within the last five years: Within the last three years, has your firm been assessed liquidated damages on three or more government construction contracts for failure to complete contract work on time?

NOTE: If there is a pending administrative or court action challenging an assessment of liquidated damages on a government contract within the last three years, you need not include that contract in responding to this question.

☐ Yes ☐ No ☒ Not applicable

7. In the last three years has your firm been debarred from bidding on, or completing, any government agency or public works construction contract for any reason?

NOTE: If there is a pending administrative or court action challenging a debarment, you need not include that debarment in responding to this question.

☐ Yes ☒ No

8. Has CAL OSHA assessed a total of three or more penalties against your firm for any "serious" or "willful" violation occurring on construction projects performed in Sacramento County at any time within the last three years?

NOTE: If there is a pending administrative or court action appealing a penalty assessment, you need not include that penalty assessment in responding to this question.

☐ Yes ☒ No

FOR CITY CLERK USE ONLY

RESOLUTION NO.: 2007-574

DATE ADOPTED: July 31, 2007

9. Answer either subsection A or B, as preferred:

A. In the last three years has your firm had a three year average Workers' Compensation experience modification rate exceeding 1.1?

☐ Yes ☒ No

OR

B. In the last three years has your firm had a three-year average incident rate for total lost workday cases exceeding 10?

NOTE: Incident rates represent the number of lost workday cases per 100 full-time workers and is to be calculated as: (N/EH) x 200,000, where

N	=	**number of lost workday cases (as defined by the U.S. Dept. of Labor, Bureau of Labor Statistics)**
EH	=	**total hours worked by all employees during the calendar year**
200,000	=	**base for 100 equivalent full-time working (working 40 hours per week, 50 weeks per year)**

☐ Yes ☒ No

10. In the past three years, has the federal EPA, Region IX or a California Air Quality Management District or Regional Water Quality Control Board assessed penalties three or more times, either against your firm, or against the project owner for a violation resulting in whole or in part from any action or omission by your firm on a project on which your firm was a contractor in Sacramento County?

NOTE: If there is a pending administrative or court action appealing a penalty assessment, you need not include that penalty assessment in responding to this question.

☐ Yes ☒ No

FOR CITY CLERK USE ONLY

RESOLUTION NO.: 2007-574

DATE ADOPTED: July 31, 2007

11. In the past three years, has the federal EPA, Region IX or a California Air Quality Management District or Regional Water Quality Control Board assessed a single penalty of $100,000 or more, either against your firm, or against the project owner for a violation resulting in whole or in part from any action or omission by your firm on a project on which your firm was the contractor in Sacramento County?

NOTE: If there is a pending administrative or court action appealing a penalty assessment, you need not include that penalty assessment in responding to this question.

☐ Yes ☒ No

12. In the past three years, have civil penalties been assessed against your firm pursuant to California Labor Code 1777.7 for violation of California public works apprenticeship requirements, three or more times?

NOTE: If there is a pending administrative or court action appealing a penalty assessment, you need not include that penalty assessment in responding to this question.

☐ Yes ☒ No

13. In the past three years, has a public agency in California withheld contract payments or assessed penalties against your firm for violation of public works prevailing wage requirements, three or more times?

NOTE: If there is a pending administrative or court action appealing a withholding or penalty assessment, you need not include that withholding or penalty assessment in responding to this question.

☐ Yes ☒ No

14. Has your firm been assessed penalties for violation of public works prevailing wage requirements in California, in an aggregate amount for the past three years of $50,000 or more?

NOTE: If there is a pending administrative or court action appealing a penalty assessment, you need not include that penalty assessment in responding to this question.

☐ Yes ☒ No

FOR CITY CLERK USE ONLY

RESOLUTION NO.: 2007-574

DATE ADOPTED: July 31, 2007

VERIFICATION AND SIGNATURE

I, the undersigned, certify and declare that I have read all the foregoing answers to this Minimum Qualifications Questionnaire, and know their contents. The matters stated in these Questionnaire answers are true of my own knowledge and belief, except as to those matters stated on information and belief, and as to those matters I believe them to be true. I declare under penalty of perjury under the laws of the State of California that the foregoing is true and correct.

Signed at Tracy, CA (Location), on 10/23/13 (Date).

Signature: Lindsey Sherwood

Print name: Lindsey Sherwood

Title: Sect/Treasurer

NOTE: If two or more entities submit a bid on a contract as a Joint Venture, each entity within the Joint Venture must submit a separate Minimum Qualifications Questionnaire.

FOR CITY CLERK USE ONLY

RESOLUTION NO.: 2007-574

DATE ADOPTED: July 31, 2007

Green Contracting Survey
(Voluntary)

The City of Sacramento and the Sacramento Metropolitan Air Quality District (SMAQMD) are conducting a joint pilot project to help meet Federal Clean Air Standards for the Sacramento region.

Attached is a Green Contracting Fleet Inventory Form. Please complete the form, remove it from the bid package and return it to SMAQMD in the postage paid envelope provided with the bid package. Please do not return the Green Contracting Fleet Inventory Form to the City of Sacramento with the bid documents or otherwise.

A limited amount of funds and other financial incentives may be available to qualified contractors participating in this joint project to assist qualified contractors with upgrading and/or replacing equipment and/or trucks.

Completing and returning the Green Contracting Fleet Inventory Form is strictly voluntary.

Voluntary Green Contracting Fleet Inventory List (On-Road Equipment)

In Partnership with the City of Sacramento and the Sacramento Metropolitan Air Quality Management District

Company Name:	
Contact Name:	
Company Address:	
City, State, ZIP:	
Company Phone:	

City Bid Information	
Department	
Project #	
ESBE/SBE?	

Instructions:

a) Please enter the vehicle / equipment information for each unit used in conjunction with your City of Sacramento Bid.
b) All fields are required for both on-road heavy-duty vehicles and off-road construction equipment over 50 HP.
c) Electronic version available at http://www.airquality.org/ceqa/index.shtml
d) For additional questions, please call (916) 874-4892

Please Submit To:

Kristian Damkier, P.E.
Sacramento Metropolitan AQMD
777 12th St, 3rd Floor
Sacramento, CA 95814-1908

#	VIN	License Plate	Vehicle Information			Engine Information				Annual Usage (miles)	Received Funding
			Make	Model	Year	Make	Model	Year	HP		
(ex)	*1XP5AAC35RG339402*	*1T45678*	*Kenworth*	*T-300*	*2002*	*Cummins*	*ISB*	*2002*	*250*	*35,000*	*No*

Voluntary Green Contracting Fleet Inventory List (Off-Road Equipment)

In Partnership with the City of Sacramento and the Sacramento Metropolitan AQMD

Company Name:	
Contact Name:	
Company Address:	
City, State, ZIP:	
Company Phone:	

City Bid Information	
Department	
Project #	
ESBE/SBE?	

Instructions:

a) Please enter the vehicle / equipment information for each unit used in conjunction with your City of Sacramento Bid.
b) All fields are required for both on-road heavy-duty vehicles and off-road construction equipment over 50 HP.
c) Electronic version is available at http://www.airquality.org/ceqa/index.shtml
d) For additional questions, please call (916) 874-4892

Please Submit To:

Kristian Damkier, P.E.
Sacramento Metropolitan AQMD
777 12th St, 3rd Floor
Sacramento, CA 95814-1908

#	Equipment Serial Number	Equipment Information				Engine Information				Annual Usage (hours)
		Make	Model	Type	Year	Make	Model	Year	HP	
(ex)	*48W34456*	*Caterpillar*	*631G*	*Scraper*	*2003*	*Caterpillar*	*3408E*	*2003*	*485*	*1,600*

DRUG-FREE WORKPLACE POLICY AND AFFIDAVIT

BID PROPOSAL MAY BE DECLARED NONRESPONSIVE IF THIS FORM (COMPLETED) IS NOT ATTACHED.
Pursuant to City Council Resolution CC90-498 dated 6/26/90 the following is required.

The undersigned contractor certifies that it and all subcontractors performing under this Agreement will provide a drug-free workplace by:

1. Publishing a "Drug-Free Workplace" statement notifying employees that the unlawful manufacture, distribution, dispensing, possession or use of a controlled substance is prohibited in the contractor's workplace and specifying the actions that will be taken against employees for violations of such prohibition.

2. Establishing a Drug-Free Awareness Program to inform employees about:

   a. The dangers of drug abuse in the workplace.
   b. The contractor's policy of maintaining a drug-free workplace.
   c. Any available drug counseling, rehabilitation, and employee assistance program.
   d. The penalties that may be imposed upon employees for drug abuse violations occurring in the workplace.

3. Notify employees that as a condition of employment under this Agreement, employees will be expected to:

   a. Abide by the terms of the statement.
   b. Notify the employer of any criminal drug statute conviction for a violation occurring in the workplace.

4. Making it a requirement that each employee to be engaged in the performance of the Agreement be given a copy on the "Drug-Free Workplace" statement.

5. Taking one of the following appropriate actions, within thirty (30) days of receiving notice from an employee or otherwise receiving such notice, that said employee has received a drug conviction for a violation occurring in the workplace:

   a. Taking appropriate disciplinary action against such an employee, up to and including termination; or
   b. Requiring such employee to participate satisfactorily in a drug abuse assistance or rehabilitation program approved for such purposes by a federal, state, or local health, law enforcement or other appropriate agency.

* I certify that no person employed by this company, corporation, or business has been convicted of any criminal drug statute violation on any job site or project where this company, corporation or business was performing was within three years of the date of my signature below.

EXCEPTION: N/A _____ _____
Date **Violation Type** **Place of Occurrence**

If additional space is required use back of this form.

*** The above statement will also be incorporated as a part of each subcontract agreement for any and all subcontractors selected for performance on this project.**

IN THE EVENT THIS COMPANY, CORPORATION, OR BUSINESS IS AWARDED THIS CONSTRUCTION AGREEMENT, AS A RESULT OF THIS BID; THE CONTRACTOR WITH HIS/HER SIGNATURE REPRESENTS TO THE CITY THAT THE INFORMATION DISCLOSED IN THIS DOCUMENT IS COMPLETE AND ACCURATE. IT IS UNDERSTOOD AND AGREED THAT FALSE CERTIFICATION IS SUBJECT TO IMMEDIATE TERMINATION BY THE CITY.

The Representations Made Herein On This Document Are Made Under Penalty Of Perjury.

CONTRACTOR'S NAME: Goodland Landscape Construction Inc.

BY: Lindsey Sherwood Sect/Treasurer **Date:** 10/23/13
Signature **Title**

Effects of violations: **a.** Suspension of payments under the Agreement. **b.** Suspension or termination of the Agreement. **c.** Suspension or debarment of the contractor from receiving any Agreement from the City of Sacramento for a period not to exceed five years.

CITY OF SACRAMENTO

THIS FORM MUST BE SUBMITTED WITH THE SEALED BID PROPOSAL

ONLY THE BASE BID NUMBERS ARE TO BE USED IN THE ESTIMATED DOLLAR VALUE

CITY OF SACRAMENTO SUBCONTRACTOR and ESBE PARTICIPATION VERIFICATION

To be eligible for award of this contract, the bidder shall list any business entity used to attain the ESBE goal. Additionally, all other subcontractors who perform work, labor, or render service in an amount in excess of one-half of 1 percent of the total bid amount shall be listed. In the case of bids for the construction of streets and highways, including bridges, subcontractors whose subcontract value exceeds one-half (0.5) of one percent of the total bid or ten thousand dollars ($10,000), whichever is greater, shall be listed. Estimated dollar values shall be provided for all work / services listed. The inclusion of false information or the omission of required information will render the bid non-responsive. **READ THE ABOVE REQUIREMENT CAREFULLY**

Name of Prime Contractor: Goodland Landscape Corporate | **BASE BID Amount:** 2240000 | Date: 10/23/13

Business Entity or Subcontractor Name and Location 1,381,941	Indicate EBE or SBE (subject to verification)	Items of Work and/or Description of Work or Service Subcontracted or Materials to be provided to complete contract	Estimated Dollar Value of Work / Services Provided **FOR BASE BID**
SPOHN RANCH INC LOS ANGELES CA		SKATE PARK STRUCTURES	$250,000
LORDS ELECTRIC, INC. SACRAMENTO, CA	SBE	ELECTRICAL	$105,500
STOCKTON FENCE CO. STOCKTON, CA		FENCING	$55,750
BIONDI PAVING SACRAMENTO, CA ✓	SBE ✓	ASPHALT	$62,500
ROBERTSON INDUSTRIES PHOENIX AZ		RUBBER SURFACING	$58,668
WHO BUILT CREATIVE PETALUMA, CA ✓	EBE ✓	PLAY EQUIPMENT	$46,141
PROFFESSIONAL TREE CARE CO. BERKELEY	SBE ✓	TREE REMOVAL	$38,000
RECREATION SCIENCE CARMICHAEL, CA ✓	SBE	SHADE STRUCTURES	$13,800
UNITED CONCRETE FAIRFIELD, CA ✓	SBE	CONCRETE	$227700

FM 440 (Rev. 2/25/04)

COPY AND ATTACH ADDITIONAL SHEETS AS NECESSARY Page ___ of ___

EBE AND SBE CERTIFICATION STATEMENTS ARE DUE BY THE CLOSE OF BUSINESS TWO DAYS AFTER BID OPENING TO: TIM HOPPER, CONTRACTS OFFICER, FOR BID TO BE RESPONSIVE

DEPARTMENT OF CONSUMER AFFAIRS
Contractors State License Board

Contractor's License Detail - License # 716914

DISCLAIMER: A license status check provides information taken from the CSLB license database. Before relying on this information, you should be aware of the following limitations.

- CSLB complaint disclosure is restricted by law (B&P 7124.6) If this entity is subject to public complaint disclosure, a link for complaint disclosure will appear below. Click on the link or button to obtain complaint and/or legal action information.
- Per B&P 7071.17 , only construction related civil judgments reported to the CSLB are disclosed.
- Arbitrations are not listed unless the contractor fails to comply with the terms of the arbitration.
- Due to workload, there may be relevant information that has not yet been entered onto the Board's license database.

License Number	**716914**	**Extract Date** 11/5/2013
Business Information	GOODLAND LANDSCAPE CONSTRUCTION INC Business Phone Number: (209) 835-9956 2455 N NAGLEE ROAD #402 TRACY, CA 95304	
Entity	Corporation	
Issue Date	01/02/1996	
Expire Date	01/31/2014	
License Status	ACTIVE This license is current and active. **All information below should be reviewed.**	
Classifications	CLASS / DESCRIPTION A / GENERAL ENGINEERING CONTRACTOR C27 / LANDSCAPING	
Bonding	CONTRACTOR'S BOND This license filed a Contractor's Bond with THE GUARANTEE COMPANY OF NORTH AMERICA USA. **Bond Number:** 12065826 **Bond Amount:** $12,500 **Effective Date:** 01/01/2010 Contractor's Bond History BOND OF QUALIFYING INDIVIDUAL 1. The Responsible Managing Officer (RMO) WORTHAM DENA MARIE certified that he/she owns 10 percent or more of the voting stock/equity of the corporation. A bond of qualifying individual is **not** required. **Effective Date:** 03/16/2004	
Workers' Compensation	WORKERS' COMPENSATION	

FOLLOWING FORMS TO BE FILLED OUT

AND SIGNED

ONLY

IF AWARDED CONTRACT

AGREEMENT
(Construction Contract Over $25,000)

THIS AGREEMENT, dated for identification January 14 , 2014, is made and entered into between the CITY OF SACRAMENTO, a municipal corporation ("City"), and
Goodland Landscape Construction, 2455 N Naglee Road, #402, Tracy, CA 95304 ("Contractor"), in the amount of Two Million Three Hundred Fifty Nine Thousand Eight Hundred Dollars and no cents ($2,359,800.00).

The City and Contractor hereby mutually agree as follows:

1. CONTRACT DOCUMENTS

The Contract Documents, sometimes also referred to as the "Contract," consist of the following items, which are hereby incorporated by reference as if set forth in full in this Agreement:

The Notice to Contractors
The Proposal Form submitted by the Contractor
The Instructions to Bidders
The Emerging and Small Business Enterprise (ESBE) Requirements
The Requirements for the Non-Discrimination in Employee Benefits by City Contractors Ordinance and the Declaration of Compliance
California Labor Code Relating to Apprentices on Public Works
The City's Reference Guide for Construction Contracts
The Addenda, if any
This Agreement
The Standard Specifications
The Special Provisions
The Plans and Technical Specifications
The drawings and other data and all developments thereof prepared by City pursuant to the Contract
Any modifications of any of the foregoing made or approved by City, including but not limited to duly authorized change orders.

Unless specifically noted otherwise, references to the "Standard Specifications" shall mean and refer to the Standard Specifications for Public Construction of the City of Sacramento approved by the Sacramento City Council on June 4, 2007 (Resolution No. 2007-350), and any subsequent amendments thereto approved by the Sacramento City Council or the Sacramento City Manager. Work called for in any one Contract Document and not mentioned in another is to be performed and executed as if mentioned in all Contract Documents. The table of contents, titles and headings contained in the Contract Documents are provided solely to facilitate reference to various provisions of the Contract Documents and in no way affect or limit the interpretation of the provisions to which they refer.

2. DEFINITIONS

Unless otherwise specifically provided herein, all words and phrases defined in the Standard Specifications shall have the same meaning and intent in this Agreement.

3. AGREEMENT CONTROLS

subject to any deductions or withholdings authorized or required under the Contract or any applicable Laws or Regulations.

(B) No inaccuracy or error in said monthly estimates shall operate to release Contractor from damages arising from such Work or from enforcement of each and every provision of the Contract Documents, and City shall have the right subsequently to correct any error made in any estimate for payment.

(C) Contractor shall not be paid for any defective or improper Work.

(D) The remaining five (5) percent of the value of the Work performed under the Contract, if unencumbered and subject to any deductions or withholdings authorized or required under the Contract or any applicable Laws or Regulations, shall be released not later than sixty (60) days after completion and final acceptance of the Work by City. Acceptance by Contractor of the final payment shall constitute a waiver of all claims against the City arising under the Contract Documents, except for disputed claims in stated amounts that the Contractor specifically reserves in writing, but only to the extent that the Contractor has complied with all procedures and requirements applicable to the presentation and processing of such claim(s) under the Contract Documents. Contractor shall be entitled to substitute securities for retention or to direct that payments of retention be made into escrow, as provided in Public Contract Code Section 22300, upon execution of the City's Escrow Agreement for Security Deposits in Lieu of Retention.

(E) The parties agree that, for purposes of the timely progress payment requirements specified in Public Contract Code Section 20104.50, the date that the City receives a statement jointly approved by the Contractor and the Engineer as provided above shall be deemed to constitute the date that City receives an undisputed and properly submitted payment request from the Contractor. Progress payments not made within 30 days after this date may be subject to payment of interest as provided in Public Contract Code Section 20104.50.

7. RETENTION OF SUMS CHARGED AGAINST CONTRACTOR

When, under the provisions of this Contract or any applicable Laws or Regulations, City is authorized or required to withhold, deduct or charge any sum of money against Contractor, City may deduct and retain the amount of such charge from the amount of the next succeeding progress estimate(s), or from any other moneys due or that may become due Contractor from City. If, on completion or termination of the Contract, sums due Contractor are insufficient to pay City's charges, City shall have the right to recover the balance from Contractor or its Sureties.

8. COMMENCEMENT AND PROSECUTION OF WORK

Contractor shall commence the Work not later than fifteen (15) working days after the date of the written Notice to Proceed from City to Contractor and shall diligently prosecute the Work to final completion. The phase "commence the Work" means to engage in a continuous program on-site including, but not limited to, site clearance, grading, dredging, land filling and the fabrications, erection, or installation of the Work. The Notice to Proceed shall be issued within fifteen (15) calendar days following execution of the Agreement by the City and the filing by Contractor of the required Bonds and proof of insurance, provided that the Engineer may delay issuance of the Notice to Proceed if the Engineer determines in the Engineer's sole discretion that conditions on the site of the Work are unsuitable for commencement of the Work. After the Notice to Proceed

of the Work by City, nor any extensions of time, nor any position taken by City, its officers, employees or its agents shall operate as a waiver of any provision of the Contract Documents nor of any power herein reserved to City or any right to damages herein provided, nor shall any waiver of any breach of this Agreement be held to be a waiver of any other or subsequent breach. All remedies provided in the Contract Documents shall be taken and construed as cumulative; in addition to each and every other remedy herein provided, the City shall have any and all equitable and legal remedies that it would in any case have.

14. WARRANTY

Except as otherwise expressly provided in the Contract Documents, and excepting only items of routine maintenance, ordinary wear and tear and unusual abuse or neglect by City, Contractor warrants and guarantees all Work executed and all supplies, materials and devices of whatsoever nature incorporated in or attached to the Work, or otherwise provided as a part of the Work pursuant to the Contract, to be absolutely free of all defects of workmanship and materials for a period of one year after final acceptance of the entire Work by the City. Contractor shall repair or replace all work or material, together with any other work or material that may be displaced or damaged in so doing, that may prove defective in workmanship or material within this one year warranty period without expense or charge of any nature whatsoever to City.

In the event that Contractor shall fail to comply with the conditions of the foregoing warranty within ten (10) days after being notified of the defect in writing, City shall have the right, but shall not be obligated, to repair, or obtain the repair of, the defect and Contractor shall pay to City on demand all costs and expense of such repair. Notwithstanding anything herein to the contrary, in the event that any defect in workmanship or material covered by the foregoing warranty results in a condition that constitutes an immediate hazard to public health or safety, or any property interest, or any person, City shall have the right to immediately repair, or cause to be repaired, such defect, and Contractor shall pay to City on demand all costs and expense of such repair. The foregoing statement relating to hazards to health, safety or property shall be deemed to include both temporary and permanent repairs that may be required as determined in the sole discretion and judgment of City.

In addition to the above, the Contractor shall make a written assignment of all manufacturer's and other product warranties to the City, prior to completion and final acceptance of the Work by City.

The Contractor's Performance Bond shall secure the performance of the Contractor's obligations under this Section 14, and the Contractor and its Surety shall be jointly and severally liable for these obligations.

15. LIQUIDATED DAMAGES IF WORK NOT COMPLETED ON TIME

(A) The actual fact of the occurrence of damages and the actual amount of the damages that City would suffer if the entire Work, and/or any specified portion thereof, were not completed within the time(s) specified herein are dependent upon many circumstances and conditions that could prevail in various combinations, and for this reason, it is impracticable and extremely difficult to fix the actual damages. Damages that City would suffer in the event of such delay include: loss of the use of the project; expenses of prolonged assignment to the project of an architectural and/or engineering staff; prolonged costs of administration, inspection, and supervision; increased operational expenses and/or impaired operation of other facilities

CONTRACTOR'S ACKNOWLEDGMENT: VS

☐ In addition to the potential damages described above, failure to complete the entire Work within the time(s) specified herein may expose the City to penalties or fines and/or may negatively affect the availability of project funding. In recognition of these potential damages, in addition to the liquidated damages specified above, Contractor shall pay additional liquidated damages to City in the lump sum amount of .00 if the entire Work is not completed by N/A. Such amount is the actual cash value agreed upon by the City and Contractor as the additional loss to City and the public resulting from Contractor's default.

CONTRACTOR'S ACKNOWLEDGMENT: VS

(C) In the event Contractor shall become liable for liquidated damages, City, in addition to all other remedies provided by law, shall have the right to withhold any and all payments that otherwise would be or become due Contractor until the liability of Contractor under this section is finally determined. City shall have the right to use and apply such payments, in whole or in part, to reimburse City for all liquidated damages due or to become due to City. Any remaining balance of such payments shall be paid to Contractor only after discharge in full of all liability incurred by Contractor under this section or otherwise under any provision of the Contract Documents or any applicable Law or Regulation. If the sum so retained by City is not sufficient to discharge all such liabilities of Contractor, Contractor shall continue to remain liable to City until all such liabilities are satisfied in full. No failure by City to withhold any payment as specified above shall in any manner be construed to constitute a release of any such liabilities nor a waiver of the City's right to withhold payment for such liabilities.

16. INDEMNITY AND HOLD HARMLESS

(A) Contractor shall defend, hold harmless and indemnify the City, its officers, employees, and agents, and each and every one of them, from and against any and all actions, damages, costs, liabilities, claims, demands, losses, judgments, penalties, costs and expenses of every type and description, whether arising on or off the site of the Work, including, but not limited to, any fees and/or costs reasonably incurred by City's staff attorneys or outside attorneys and any fees and expenses incurred in enforcing this provision (hereafter collectively referred to as "Liabilities"), including but not limited to Liabilities arising from personal injury or death, damage to personal, real or intellectual property or the environment, contractual or other economic damages, or regulatory penalties, arising out of or in any way connected with performance of or failure to perform the Work by the Contractor, any subcontractor or agent, anyone directly or indirectly employed by any of them or anyone for whose acts any of them may be liable, whether or not (i) such Liabilities are caused in part by a party indemnified hereunder, or (ii) such Liabilities are litigated, settled or reduced to judgment; provided that the foregoing indemnity does not apply to liability for damages for death or bodily injury to persons, injury to property, or other loss, damage or expense to the extent arising from (i) the sole negligence or willful misconduct of, or defects in design furnished by, City, its agents, servants, or independent contractors who are directly responsible to City, or (ii) the active negligence of City.

(B) The existence or acceptance by City of any of the insurance policies or coverages described in this Agreement shall not affect or limit any of City's rights under this Section 16, nor shall the limits of such insurance limit the liability of Contractor hereunder. The

(3) Workers' Compensation Insurance with statutory limits, and Employers' Liability Insurance with limits of not less than one million dollars ($1,000,000). The Worker's Compensation policy shall include a waiver of subrogation.

(B) Additional Insured Coverage

(1) Commercial General Liability Insurance: The City, its officials, employees and volunteers shall be covered by policy terms or endorsement as additional insureds as respects general liability arising out of activities performed by or on behalf of Contractor, products and completed operations of Contractor, and premises owned, leased or used by Contractor. The general liability additional insured endorsement must be signed by an authorized representative of the insurance carrier.

If the policy includes a blanket additional insured endorsement or contractual additional insured coverage, the above signature requirement may be fulfilled by submitting that document with a signed declaration page referencing the blanket endorsement or policy form.

(2) Automobile Liability Insurance: The City, its officials, employees and volunteers shall be covered by policy terms or endorsement as additional insureds as respects auto liability.

(C) Other Insurance Provisions

The policies are to contain, or be endorsed to contain, the following provisions:

(1) Contractor's insurance coverage shall be primary insurance as respects City, its officials, employees and volunteers. Any insurance or self-insurance maintained by City, its officials, employees or volunteers shall be in excess of Contractor's insurance and shall not contribute with it.

(2) Any failure to comply with reporting provisions of the policies shall not affect coverage provided to City, its officials, employees or volunteers.

(3) Coverage shall state that Contractor's insurance shall apply separately to each insured against whom claim is made or suit is brought, except with respect to the limits of the insurer's liability.

(4) City will be provided with thirty (30) days written notice of cancellation or material change in the policy language or terms.

(D) Acceptability of Insurance

Insurance shall be placed with insurers with a Bests' rating of not less than A:V. Self-insured retentions, policy terms or other variations that do not comply with the requirements of this Section 19 must be declared to and approved by the City Risk Management Division in writing prior to execution of this Agreement.

(E) Verification of Coverage

of Contractor from commencing or prosecuting the Work because of the acts of others, excepting Contractor's subcontractors or suppliers; or the prevention of Contractor from commencing or prosecuting the Work because of a Citywide failure of public utility service.

The term "Excusable Delay" shall specifically not include: (i) any delay that could have been avoided by the exercise of care, prudence, foresight and diligence on the part of Contractor; (ii) any delay in the prosecution of any part of the Work that does not constitute a Controlling Operation, whether or not such delay is unavoidable; (iii) any reasonable delay resulting from time required by City for review of any Contractor submittals and for the making of surveys, measurements and inspection; and, (iv) any delay arising from an interruption in the prosecution of the Work on account of reasonable interference by other Contractors employed by City that does not necessarily prevent the completion of the entire Work within the time specified. Excusable Delays, if any, shall operate only to extend the Completion Date (not in excess of the period of such delay as determined by City) and shall not under any circumstances increase the amount City is required to pay Contractor except as otherwise provided in these Contract Documents.

22. CONTRACTOR TO SERVE NOTICE OF DELAYS

Whenever Contractor foresees any delay in the prosecution of the Work, and in any event as soon as possible (not to exceed a period of ten (10) calendar days) after the initial occurrence of any delay that Contractor regards as or may later claim to be an Excusable Delay, the Contractor shall notify the Engineer in writing of such delay and its cause, in order that the Engineer: (i) may take immediate steps to prevent if possible the occurrence or continuance of the delay; or (ii) if this cannot be done, may determine whether the delay is to be considered excusable, how long it continues, and to what extent the prosecution and completion of the Work are delayed thereby. Said written notice shall constitute an application for an extension of time only if the notice requests such an extension and sets forth the Contractor's estimate of the additional time required together with a full description of the cause of the delay relied upon.

After the completion of any part or whole of the Work, the Engineer, in estimating the amount due Contractor, will assume that any and all delays that may have occurred in its prosecution and completion were not Excusable Delays, except for such delays for which the Contractor has provided timely written notice as required herein, and that the Engineer has found to be excusable. Contractor shall not be entitled to claim Excusable Delay for any delay for which the Contractor failed to provide such timely written notice.

23. EXTENSION OF TIME

If the Contractor complies with Section 22, above, and the Engineer finds a delay claimed by the Contractor to be an Excusable Delay, the Contractor shall be allowed an extension of time to complete the Work that is proportional to the period of Excusable Delay determined by the Engineer, subject to the approval by City of a change order granting such time extension. During a duly authorized extension for an Excusable Delay, City shall not charge liquidated damages against the Contractor for such delay.

If the City extends the time to complete the Work as provided herein, such extension shall in no way release any warranty or guarantee given by Contractor pursuant to the provisions of the Contract Documents, nor shall such extension of time relieve or release the sureties of the Bonds provided pursuant to the Contract Documents. By executing such Bonds, the Sureties shall be deemed to have expressly agreed to any such extension of time. The granting of any extension of

27. TERMINATION FOR CONVENIENCE

Upon written notice to the Contractor, the City may at any time, without cause and without prejudice to any other right or remedy of the City, elect to terminate the Contract for the convenience of City. In such case, the Contractor shall be paid (without duplication of any items, and after deduction and/or withholding of any amounts authorized to be deducted or withheld by the Contract Documents or any Laws or Regulations):

(A) For Work executed in accordance with the Contract Documents prior to the effective date of termination and determined to be acceptable by the Engineer, including fair and reasonable sums for overhead and profit on such Work;

(B) For reasonable claims, costs, losses, and damages incurred in settlement of terminated contracts with subcontractors, suppliers, and others; and

(C) For reasonable expenses directly attributable to termination.

Contractor shall not be paid for any loss of anticipated profits or revenue for any Work not performed prior to termination, nor for any economic loss arising out of or resulting from such termination, except for the payments listed in this section. Contractor's warranty under Section 14 of this Agreement shall apply, and Contractor shall remain responsible for all obligations related to such warranty, with respect to all portions of the Work performed prior to the effective date of the termination for convenience pursuant to this section. The City shall be entitled to have any or all remaining Work performed by other contractors or by any other means at any time after the effective date of a termination for convenience pursuant to this section.

28. TERMINATION FOR BREACH OF CONTRACT

If Contractor abandons the Work under this Contract, or if the Contract or any portion of the Contract is sublet or assigned without the consent of the City, or if the Engineer determines in the Engineer's sole discretion that the conditions of the Contract in respect to the rate of progress of the Work are not being fulfilled or any part thereof is unnecessarily delayed, or if Contractor violates or breaches, or fails to execute in good faith, any of the terms or conditions of the Contract, or if Contractor refuses or fails to supply enough properly skilled labor or materials or refuses or fails to make prompt payment to subcontractors for material or labor, or if Contractor disregards any Laws or Regulations or proper instruction or orders of the Engineer, then, notwithstanding any provision to the contrary herein, the City may give Contractor and its Sureties written notification to immediately correct the situation or the Contract shall be terminated.

In the event that such notice is given, and, in the event such situation is not corrected, or arrangements for correction satisfactory to the City are not made, within ten (10) calendar days from the date of such notice or within such other period of time as may be specified by the City in the notice, the Contract shall upon the expiration of said period cease and terminate. In the event of any such termination, City may take over the Work and prosecute the Work to completion, or otherwise, and the Contractor and its Sureties shall be liable to City for any cost occasioned City thereby, as hereinafter set forth.

32. USE TAX REQUIREMENTS

During the performance of this Agreement, CONTRACTOR, for itself, its assignees and successors in interest, agrees as follows:

(A) Use Tax Direct Payment Permit: For all leases and purchases of materials, equipment, supplies, or other tangible personal property used to perform the Agreement and shipped from outside California, the Contractor and any subcontractors leasing or purchasing such materials, equipment, supplies or other tangible personal property shall obtain a Use Tax Direct Payment Permit from the California State Board of Equalization ("SBE") in accordance with the applicable SBE criteria and requirements.

(B) Sellers Permit: For any construction contract and any construction subcontract in the amount of $5,000,000 or more, Contractor and the subcontractor(s) shall obtain sellers permits from the SBE and shall register the jobsite as the place of business for the purpose of allocating local sales and use tax to the City. Contractor and its subcontractors shall remit the self-accrued use tax to the SBE, and shall provide a copy of each remittance to the City.

(C) The above provisions shall apply in all instances unless prohibited by the funding source for the Agreement.

IN WITNESS WHEREOF, the parties hereto have signed this Agreement on the date set for opposite their names.

CONTRACTOR

Under penalty of perjury, I certify that the taxpayer identification number and all other information provided here are correct.

DATE 12/6/13

BY [signature]
Lindsey Sherwood
Print Name
Sect/Treasurer
Title

BY Tom Northam
Thomas Northam
Print Name
Vice President
Title

Federal ID# 68-0367954

State ID# 421-44-642

CALIFORNIA ALL-PURPOSE ACKNOWLEDGMENT

State of California

County of San Joaquin

On 12-6-13 (Date) before me, Dena Wortham, Notary Public (Here Insert Name and Title of the Officer),

personally appeared Thomas Worthan (Name(s) of Signer(s)),

who proved to me on the basis of satisfactory evidence to be the person(s) whose name(s) is/are subscribed to the within instrument and acknowledged to me that he/she/they executed the same in his/her/their authorized capacity(ies), and that by his/her/their signature(s) on the instrument the person(s), or the entity upon behalf of which the person(s) acted, executed the instrument.

DENA WORTHAM
Commission # 1885616
Notary Public - California
San Joaquin County
My Comm. Expires Apr 11, 2014

I certify under PENALTY OF PERJURY under the laws of the State of California that the foregoing paragraph is true and correct.

WITNESS my hand and official seal.

Signature: Dena Worth
Signature of Notary Public

Place Notary Seal Above

OPTIONAL

Though the information below is not required by law, it may prove valuable to persons relying on the document and could prevent fraudulent removal and reattachment of this form to another document.

Description of Attached Document

Title or Type of Document: _____

Document Date: _____ Number of Pages: _____

Signer(s) Other Than Named Above: _____

Capacity(ies) Claimed by Signer(s)

Signer's Name: _____

☐ Corporate Officer — Title(s): _____

☐ Individual

☐ Partner — ☐ Limited ☐ General

☐ Attorney in Fact

☐ Trustee

☐ Guardian or Conservator

☐ Other: _____

Signer Is Representing: _____

RIGHT THUMBPRINT OF SIGNER
Top of thumb here

Signer's Name: _____

☐ Corporate Officer — Title(s): _____

☐ Individual

☐ Partner — ☐ Limited ☐ General

☐ Attorney in Fact

☐ Trustee

☐ Guardian or Conservator

☐ Other: _____

Signer Is Representing: _____

RIGHT THUMBPRINT OF SIGNER
Top of thumb here

© 2009 National Notary Association • NationalNotary.org • 1-800-US NOTARY (1-800-876-6827)

Item #5907

CALIFORNIA ALL-PURPOSE ACKNOWLEDGMENT

State of California

County of San Joaquin

On 12-6-13 (Date) before me, Dena Worham, Notary Public (Here Insert Name and Title of the Officer)

personally appeared Lindsey Sherwood (Name(s) of Signer(s))

who proved to me on the basis of satisfactory evidence to be the person(s) whose name(s) is/are subscribed to the within instrument and acknowledged to me that he/she/they executed the same in his/her/their authorized capacity(ies), and that by his/her/their signature(s) on the instrument the person(s), or the entity upon behalf of which the person(s) acted, executed the instrument.

DENA WORTHAM
Commission # 1885616
Notary Public - California
San Joaquin County
My Comm. Expires Apr 11, 2014

I certify under PENALTY OF PERJURY under the laws of the State of California that the foregoing paragraph is true and correct.

WITNESS my hand and official seal.

Signature: _____ (Signature of Notary Public)

Place Notary Seal Above

OPTIONAL

Though the information below is not required by law, it may prove valuable to persons relying on the document and could prevent fraudulent removal and reattachment of this form to another document.

Description of Attached Document

Title or Type of Document: _____

Document Date: _____ Number of Pages: _____

Signer(s) Other Than Named Above: _____

Capacity(ies) Claimed by Signer(s)

Signer's Name: _____

☐ Corporate Officer — Title(s): _____

☐ Individual

☐ Partner — ☐ Limited ☐ General

☐ Attorney in Fact

☐ Trustee

☐ Guardian or Conservator

☐ Other: _____

Signer Is Representing: _____

RIGHT THUMBPRINT OF SIGNER
Top of thumb here

Signer's Name: _____

☐ Corporate Officer — Title(s): _____

☐ Individual

☐ Partner — ☐ Limited ☐ General

☐ Attorney in Fact

☐ Trustee

☐ Guardian or Conservator

☐ Other: _____

Signer Is Representing: _____

RIGHT THUMBPRINT OF SIGNER
Top of thumb here

© 2009 National Notary Association • NationalNotary.org • 1-800-US NOTARY (1-800-876-6827)

Item #5907

City of Sacramento Business Operation Tax Certificate No. (City will not award contract until Certificate Number is obtained)

Type of Business Entity *(check one)*:

_____ Individual/Sole Proprietor
_____ Partnership
__X__ Corporation
_____ Limited Liability Company
_____ Other (*please specify:*_____)

CITY OF SACRAMENTO
a municipal corporation

DATE _____

BY _____
For: _____
City Manager

Original Approved As To Form:

_____
City Attorney

Attest:

_____
City Clerk

CITY OF SACRAMENTO
PERFORMANCE BOND

Bond No.: 12097817
Premium: $19,878.00
Page 1 of 1

WHEREAS, the City of Sacramento, State of California, hereinafter called City, has conditionally awarded to: Goodland Landscape Construction, 2455 N Naglee Road, #402, Tracy, CA 95304,

as principal, hereinafter called Contractor, a contract for construction of:

MCCLATCHY PARK RENOVATION (L19136500)

which contract is by reference incorporated herein and made a part hereof as if the Surety named below were a party to the contract, and is hereinafter referred to as the Contract; and

WHEREAS, under the terms of the Contract, Contractor is required to furnish a bond for the faithful performance of the Contract.

NOW, THEREFORE, we the Contractor and *(here insert full name and address of Surety)*:
THE GUARANTEE COMPANY OF NORTH AMERICA USA, ONE TOWNE SQUARE, SUITE 1470, SOUTHFIELD, MI 48076

a corporation duly authorized and admitted to transact business and issue surety bonds in the State of California, hereinafter called Surety, are held and firmly bound unto the City, as obligee, in the sum of:
Two Million Three Hundred Fifty Nine Thousand Eight Hundred Dollars and no cents ($2,359,800.00), for the payment of which sum well and truly to be made, we the Contractor and Surety bind ourselves, our heirs, executors, administrators, successors and assigns, jointly and severally. The condition of this obligation is such that, if the Contractor, Contractor's heirs, executors, administrators, successors or assigns, shall in all things stand to and abide by, and well and truly keep and fully perform all covenants, conditions and agreements required to be kept and performed by Contractor in the Contract and any changes, additions or alterations made thereto, to be kept and performed at the time and in the manner therein specified, and in all respects according to their true intent and meanings, and shall indemnify and save harmless the City, its officers, employees and agents, as therein provided, then the Surety's obligations under the Contract and this bond shall be null and void; otherwise they shall be and remain in full force and effect. This obligation shall remain in full force and effect through the end of the Contract warranty period, which will expire one year after the completion of work date specified in the Notice of Completion filed for the above-named project.

As part of the obligations secured hereby and in addition to the sum specified above, there shall be included all costs, expenses and fees, including attorney's fees, reasonably incurred by City in successfully enforcing such obligations, all to be taxed as costs and included in any judgment rendered.

The Surety, for value received, hereby stipulates and agrees that no change, extension of time, alteration or addition to the terms of the Contract or to the work to be performed thereunder or to the specifications accompanying the same shall in any way affect its obligations on this bond, and it does hereby waive notice of any such change, extension, alteration or addition.

IN WITNESS WHEREOF, this instrument has been duly executed by authorized representatives of the Contractor and Surety. SIGNED AND SEALED on NOVEMBER 27TH, 20 13.

GOODLAND LANDSCAPE CONSTRUCTION, INC.
(Contractor) (Seal)
By
Title LINDSEY SHERWOOD, SECRETARY-TREASURER

ORIGINAL APPROVED AS TO FORM:

City Attorney

THE GUARANTEE COMPANY OF NORTH AMERICA USA
By
Title ROBERT W. BABCOCK, ATTORNEY-IN-FACT
R.W. BABCOCK INSURANCE BROKERAGE, INC.
Agent name & Address 6600 KOLL CENTER PKWY, SUITE 150, PLEASANTON, CA 94566
Agent Phone # 925-401-3444
Surety Phone # 925-566-6040
California License # 0727865

Form approved by CAO 5-9-12

CALIFORNIA ALL-PURPOSE ACKNOWLEDGMENT

State of California

County of San Joaquin }

On 12.6.13 (Date) before me, Dena Wortham Notary Public (Here Insert Name and Title of the Officer)

personally appeared Lindsey Sherwood (Name(s) of Signer(s))

who proved to me on the basis of satisfactory evidence to be the person(s) whose name(s) is/are subscribed to the within instrument and acknowledged to me that he/she/they executed the same in his/her/their authorized capacity(ies), and that by his/her/their signature(s) on the instrument the person(s), or the entity upon behalf of which the person(s) acted, executed the instrument.

DENA WORTHAM
Commission # 1885616
Notary Public - California
San Joaquin County
My Comm. Expires Apr 11, 2014

I certify under PENALTY OF PERJURY under the laws of the State of California that the foregoing paragraph is true and correct.

WITNESS my hand and official seal.

Signature: _____ (Signature of Notary Public)

Place Notary Seal Above

OPTIONAL

Though the information below is not required by law, it may prove valuable to persons relying on the document and could prevent fraudulent removal and reattachment of this form to another document.

Description of Attached Document

Title or Type of Document: _____

Document Date: _____ Number of Pages: _____

Signer(s) Other Than Named Above: _____

Capacity(ies) Claimed by Signer(s)

Signer's Name: _____

☐ Corporate Officer — Title(s): _____

☐ Individual

☐ Partner — ☐ Limited ☐ General

☐ Attorney in Fact

☐ Trustee

☐ Guardian or Conservator

☐ Other: _____

Signer Is Representing: _____

RIGHT THUMBPRINT OF SIGNER
Top of thumb here

Signer's Name: _____

☐ Corporate Officer — Title(s): _____

☐ Individual

☐ Partner — ☐ Limited ☐ General

☐ Attorney in Fact

☐ Trustee

☐ Guardian or Conservator

☐ Other: _____

Signer Is Representing: _____

RIGHT THUMBPRINT OF SIGNER
Top of thumb here

© 2009 National Notary Association • NationalNotary.org • 1-800-US NOTARY (1-800-876-6827)

Item #5907

THE GUARANTEE™

The Guarantee Company of North America USA
Southfield, Michigan

POWER OF ATTORNEY

KNOW ALL BY THESE PRESENTS: That **THE GUARANTEE COMPANY OF NORTH AMERICA USA**, a corporation organized and existing under the laws of the State of Michigan, having its principal office in Southfield, Michigan, does hereby constitute and appoint

Robert W. Babcock, Mollie Whalen, Kristin Robertson, Abolanle Felock, Megan Montano, Daniel Joseph Mastrantonio, James Lawrence Ronhaar, Annie Van
R. W. Babcock Insurance Brokerage, Inc.

its true and lawful attorney(s)-in-fact to execute, seal and deliver for and on its behalf as surety, any and all bonds and undertakings, contracts of indemnity and other writings obligatory in the nature thereof, which are or may be allowed, required or permitted by law, statute, rule, regulation, contract or otherwise.

The execution of such instrument(s) in pursuance of these presents, shall be as binding upon **THE GUARANTEE COMPANY OF NORTH AMERICA USA** as fully and amply, to all intents and purposes, as if the same had been duly executed and acknowledged by its regularly elected officers at the principal office.

The Power of Attorney is executed and may be certified so, and may be revoked, pursuant to and by authority of Article IX, Section 9.03 of the By-Laws adopted by the Board of Directors of **THE GUARANTEE COMPANY OF NORTH AMERICA USA** at a meeting held on the 31st day of December, 2003. The President, or any Vice President, acting with any Secretary or Assistant Secretary, shall have power and authority:

1. To appoint Attorney(s)-in-fact, and to authorize them to execute on behalf of the Company, and attach the Seal of the Company thereto, bonds and undertakings, contracts of indemnity and other writings obligatory in the nature thereof; and
2. To revoke, at any time, any such Attorney-in-fact and revoke the authority given, except as provided below
3. In connection with obligations in favor of the Florida Department of Transportation only, it is agreed that the power and authority hereby given to the Attorney-in-Fact includes any and all consents for the release of retained percentages and/or final estimates on engineering and construction contracts required by the State of Florida Department of Transportation. It is fully understood that consenting to the State of Florida Department of Transportation making payment of the final estimate to the Contractor and/or its assignee, shall not relieve this surety company of any of its obligations under its bond.
4. In connection with obligations in favor of the Kentucky Department of Highways only, it is agreed that the power and authority hereby given to the Attorney-in-Fact cannot be modified or revoked unless prior written personal notice of such intent has been given to the Commissioner – Department of Highways of the Commonwealth of Kentucky at least thirty (30) days prior to the modification or revocation.

Further, this Power of Attorney is signed and sealed by facsimile pursuant to resolution of the Board of Directors of the Company adopted at a meeting duly called and held on the 6th day of December 2011, of which the following is a true excerpt:

RESOLVED that the signature of any authorized officer and the seal of the Company may be affixed by facsimile to any Power of Attorney or certification thereof authorizing the execution and delivery of any bond, undertaking, contracts of indemnity and other writings obligatory in the nature thereof, and such signature and seal when so used shall have the same force and effect as though manually affixed.

IN WITNESS WHEREOF, **THE GUARANTEE COMPANY OF NORTH AMERICA USA** has caused this instrument to be signed and its corporate seal to be affixed by its authorized officer, this 23rd day of February, 2012.

THE GUARANTEE COMPANY OF NORTH AMERICA USA

Stephen C. Ruschak, Sr. Vice President, COO | **Randall Musselman, Secretary**

STATE OF MICHIGAN
County of Oakland

On this 23rd day of February, 2012 before me came the individuals who executed the preceding instrument, to me personally known, and being by me duly sworn, said that each is the herein described and authorized officer of The Guarantee Company of North America USA; that the seal affixed to said instrument is the Corporate Seal of said Company; that the Corporate Seal and each signature were duly affixed by order of the Board of Directors of

Cynthia A. Takai
Notary Public, State of Michigan
County of Oakland
My Commission Expires February 27, 2018
Acting in Oakland County

IN WITNESS WHEREOF, I have hereunto set my hand at The Guarantee Company of North America USA offices the day and year above written.

Cynthia A. Takai

I, Randall Musselman, Secretary of **THE GUARANTEE COMPANY OF NORTH AMERICA USA**, do hereby certify that the above and foregoing is a true and correct copy of a Power of Attorney executed by **THE GUARANTEE COMPANY OF NORTH AMERICA USA**, which is still in full force and effect.

IN WITNESS WHEREOF, I have thereunto set my hand and attached the seal of said Company this 27TH day of NOVEMBER, 2013

Randall Musselman, Secretary

CALIFORNIA ALL-PURPOSE ACKNOWLEDGMENT

STATE OF CALIFORNIA

County of Alameda }

On NOVEMBER 27TH, 2013 (Date) before me, ANNIE VAN, NOTARY PUBLIC (Here Insert Name and Title of the Officer),

personally appeared ROBERT W. BABCOCK (Name(s) of Signer(s)),

who proved to me on the basis of satisfactory evidence to be the person(s) whose name(s) is/are subscribed to the within instrument and acknowledged to me that he/she/they executed the same in his/her/their authorized capacity(ies), and that by his/her/their signature(s) on the instrument the person(s), or the entity upon behalf of which the person(s) acted, executed the instrument.

I certify under PENALTY OF PERJURY under the laws of the State of California that the foregoing paragraph is true and correct.

Witness my hand and official seal.

Signature _____
Signature of Notary Public

ANNIE VAN
COMM. NO. 2036769
NOTARY PUBLIC - CALIFORNIA
ALAMEDA COUNTY
My Comm. Expires Aug. 12, 2017

Place Notary Seal Above

OPTIONAL

Though the information below is not required by law, it may prove valuable to persons relying on the document and could prevent fraudulent removal and reattachment of this form to another document.

Description of Attached Document

Title or Type of Document: _____

Document Date: _____ Number of Pages: _____

Signer(s) Other Than Named Above: _____

Capacity(ies) Claimed by Signer(s)

Signer's Name: _____
☐ Individual
☐ Corporate Officer — Title(s): _____
☐ Partner — ☐ Limited ☐ General
☐ Attorney in Fact
☐ Trustee
☐ Guardian or Conservator
☐ Other: _____

Signer Is Representing:

RIGHT THUMBPRINT OF SIGNER
Top of thumb here

Signer's Name: _____
☐ Individual
☐ Corporate Officer — Title(s): _____
☐ Partner — ☐ Limited ☐ General
☐ Attorney in Fact
☐ Trustee
☐ Guardian or Conservator
☐ Other: _____

Signer Is Representing:

RIGHT THUMBPRINT OF SIGNER
Top of thumb here

© 2007 National Notary Association • 9350 De Soto Ave., P.O. Box 2402 • Chatsworth, CA 91313-2402 • www.NationalNotary.org Item #5907 Reorder: Call Toll-Free 1-800-876-6827

CITYOF SACRAMENTO
PAYMENT BOND

Bond No.: 12097817
Premium: INCLUDED WITH PERFORMANCE BOND

WHEREAS, the City of Sacramento, in the State of California, hereinafter called City, has conditionally awarded to: Goodland Landscape Construction, 2455 N Naglee Road, #402, Tracy, CA 95304

hereinafter called Contractor, a contract for construction of:

MCCLATCHY PARK RENOVATION (L19136500)

Which contract is by reference incorporated herein and made a part hereof, and is hereinafter referred to as the Contract; and

WHEREAS, under the terms of the Contract and pursuant to Chapter 5 of Title 3 of Part 6 of Division 4 of the California Civil Code (commencing with Civil Code Section 9550), Contractor is required to furnish a good and sufficient payment bond to secure payment of the claims to which reference is made in Civil Code Section 9554.

NOW, THEREFORE, we the Contractor and (*here insert full name and address of Surety*):
THE GUARANTEE COMPANY OF NORTH AMERICA USA, ONE TOWNE SQUARE, SUITE 1470, SOUTHFIELD, MI 48076
a corporation duly authorized and admitted to transact business and issue surety bonds in the State of California, hereinafter called Surety, are held and firmly bound unto the City, and unto all persons or entities entitled to assert a claim against a payment bond under any of the aforesaid Civil Code provisions in the sum of Two Million Three Hundred Fifty Nine Thousand Eight Hundred Dollars and no cents ($2,359,800.00), on the condition that if Contractor shall fail to pay for any materials or equipment furnished or used in performance of the Contract, or for any work or labor thereon of any kind, or for amounts due under the Unemployment Insurance Act with respect to such work or labor, or for any amounts required to be deducted, withheld, and paid over to the Franchise Tax Board or the Employment Development Department from the wages of employees of the Contractor and all subcontractors with respect to such work or labor, then the Surety shall pay the same in an amount not exceeding the sum specified above. If suit is brought upon this bond, Surety shall pay, in addition to the above sum, all costs, expenses and fees, including attorney's fees, reasonably incurred by any party in successfully enforcing the obligation secured hereby, all to be taxed as costs and included in any judgment rendered. Should the condition of this bond be fully performed, then this obligation shall become null and void, otherwise it shall be and remain in full force and effect, and shall bind Contractor, Surety, their heirs, executors, administrators, successors and assigns, jointly and severally.

It is hereby stipulated and agreed that this bond shall inure to the benefit of all persons, companies, corporations, political subdivisions, State agencies and other entities entitled to assert a claim against a payment bond under any of the aforesaid Civil Code provisions, so as to give a right of action to them or their assigns in any suit brought upon this bond. The Surety, for value received, hereby stipulates and agrees that no change, extension of time, alteration or addition to the terms of the Contract or to the work to be performed thereunder or to the specifications accompanying the same shall in any way affect its obligations on this bond, and it does hereby waive notice of any such change, extension, alteration or addition.

IN WITNESS WHEREOF, this instrument has been duly executed by authorized representatives of the Contractor and Surety. SIGNED AND SEALED on NOVEMBER 27TH, 20 13.

GOODLAND LANDSCAPE CONSTRUCTION, INC.
(Contractor) (Seal)
By
Title LINDSEY SHERWOOD, SECRETARY-TREASURER

ORIGINAL APPROVED AS TO FORM:

City Attorney

THE GUARANTEE COMPANY OF NORTH AMERICA USA
By
Title ROBERT W. BABCOCK, ATTORNEY-IN-FACT
R.W. BABCOCK INSURANCE BROKERAGE, INC.
Agent name & Address 6600 KOLL CENTER PKWY, SUITE 150, PLEASANTON, CA 94566
Agent Phone # 925-401-3444
Surety Phone # 925-566-6040
California License # 0727865

CALIFORNIA ALL-PURPOSE ACKNOWLEDGMENT

State of California

County of San Joaquin }

On 12-6-13 (Date) before me, Dena Wortham, Notary Public (Here Insert Name and Title of the Officer)

personally appeared Lindsey Sherwood (Name(s) of Signer(s))

who proved to me on the basis of satisfactory evidence to be the person(s) whose name(s) is/are subscribed to the within instrument and acknowledged to me that he/she/they executed the same in his/her/their authorized capacity(ies), and that by his/her/their signature(s) on the instrument the person(s), or the entity upon behalf of which the person(s) acted, executed the instrument.

DENA WORTHAM
Commission # 1885616
Notary Public - California
San Joaquin County
My Comm. Expires Apr 11, 2014

I certify under PENALTY OF PERJURY under the laws of the State of California that the foregoing paragraph is true and correct.

WITNESS my hand and official seal.

Signature: _____ (Signature of Notary Public)

Place Notary Seal Above

OPTIONAL

Though the information below is not required by law, it may prove valuable to persons relying on the document and could prevent fraudulent removal and reattachment of this form to another document.

Description of Attached Document

Title or Type of Document: _____

Document Date: _____ Number of Pages: _____

Signer(s) Other Than Named Above: _____

Capacity(ies) Claimed by Signer(s)

Signer's Name: _____

☐ Corporate Officer — Title(s): _____

☐ Individual

☐ Partner — ☐ Limited ☐ General

☐ Attorney in Fact

☐ Trustee

☐ Guardian or Conservator

☐ Other: _____

Signer Is Representing: _____

RIGHT THUMBPRINT OF SIGNER
Top of thumb here

Signer's Name: _____

☐ Corporate Officer — Title(s): _____

☐ Individual

☐ Partner — ☐ Limited ☐ General

☐ Attorney in Fact

☐ Trustee

☐ Guardian or Conservator

☐ Other: _____

Signer Is Representing: _____

RIGHT THUMBPRINT OF SIGNER
Top of thumb here

© 2009 National Notary Association • NationalNotary.org • 1-800-US NOTARY (1-800-876-6827)

Item #5907

THE GUARANTEE™

The Guarantee Company of North America USA
Southfield, Michigan

POWER OF ATTORNEY

KNOW ALL BY THESE PRESENTS: That **THE GUARANTEE COMPANY OF NORTH AMERICA USA**, a corporation organized and existing under the laws of the State of Michigan, having its principal office in Southfield, Michigan, does hereby constitute and appoint

Robert W. Babcock, Mollie Whalen, Kristin Robertson, Abolanle Felock, Megan Montano, Daniel Joseph Mastrantonio, James Lawrence Ronhaar, Annie Van
R. W. Babcock Insurance Brokerage, Inc.

its true and lawful attorney(s)-in-fact to execute, seal and deliver for and on its behalf as surety, any and all bonds and undertakings, contracts of indemnity and other writings obligatory in the nature thereof, which are or may be allowed, required or permitted by law, statute, rule, regulation, contract or otherwise.

The execution of such instrument(s) in pursuance of these presents, shall be as binding upon **THE GUARANTEE COMPANY OF NORTH AMERICA USA** as fully and amply, to all intents and purposes, as if the same had been duly executed and acknowledged by its regularly elected officers at the principal office.

The Power of Attorney is executed and may be certified so, and may be revoked, pursuant to and by authority of Article IX, Section 9.03 of the By-Laws adopted by the Board of Directors of **THE GUARANTEE COMPANY OF NORTH AMERICA USA** at a meeting held on the 31st day of December, 2003. The President, or any Vice President, acting with any Secretary or Assistant Secretary, shall have power and authority:

1. To appoint Attorney(s)-in-fact, and to authorize them to execute on behalf of the Company, and attach the Seal of the Company thereto, bonds and undertakings, contracts of indemnity and other writings obligatory in the nature thereof; and
2. To revoke, at any time, any such Attorney-in-fact and revoke the authority given, except as provided below
3. In connection with obligations in favor of the Florida Department of Transportation only, it is agreed that the power and authority hereby given to the Attorney-in-Fact includes any and all consents for the release of retained percentages and/or final estimates on engineering and construction contracts required by the State of Florida Department of Transportation. It is fully understood that consenting to the State of Florida Department of Transportation making payment of the final estimate to the Contractor and/or its assignee, shall not relieve this surety company of any of its obligations under its bond.
4. In connection with obligations in favor of the Kentucky Department of Highways only, it is agreed that the power and authority hereby given to the Attorney-in-Fact cannot be modified or revoked unless prior written personal notice of such intent has been given to the Commissioner – Department of Highways of the Commonwealth of Kentucky at least thirty (30) days prior to the modification or revocation.

Further, this Power of Attorney is signed and sealed by facsimile pursuant to resolution of the Board of Directors of the Company adopted at a meeting duly called and held on the 6th day of December 2011, of which the following is a true excerpt:

RESOLVED that the signature of any authorized officer and the seal of the Company may be affixed by facsimile to any Power of Attorney or certification thereof authorizing the execution and delivery of any bond, undertaking, contracts of indemnity and other writings obligatory in the nature thereof, and such signature and seal when so used shall have the same force and effect as though manually affixed.

IN WITNESS WHEREOF, **THE GUARANTEE COMPANY OF NORTH AMERICA USA** has caused this instrument to be signed and its corporate seal to be affixed by its authorized officer, this 23rd day of February, 2012.

THE GUARANTEE COMPANY OF NORTH AMERICA USA

Stephen C. Ruschak, Sr. Vice President, COO **Randall Musselman, Secretary**

STATE OF MICHIGAN
County of Oakland

On this 23rd day of February, 2012 before me came the individuals who executed the preceding instrument, to me personally known, and being by me duly sworn, said that each is the herein described and authorized officer of The Guarantee Company of North America USA; that the seal affixed to said instrument is the Corporate Seal of said Company; that the Corporate Seal and each signature were duly affixed by order of the Board of Directors of

Cynthia A. Takai
Notary Public, State of Michigan
County of Oakland
My Commission Expires February 27, 2018
Acting in Oakland County

IN WITNESS WHEREOF, I have hereunto set my hand at The Guarantee Company of North America USA offices the day and year above written.

Cynthia A. Takai

I, Randall Musselman, Secretary of **THE GUARANTEE COMPANY OF NORTH AMERICA USA**, do hereby certify that the above and foregoing is a true and correct copy of a Power of Attorney executed by **THE GUARANTEE COMPANY OF NORTH AMERICA USA**, which is still in full force and effect.

IN WITNESS WHEREOF, I have thereunto set my hand and attached the seal of said Company this **27TH** day of **NOVEMBER, 2013**

Randall Musselman, Secretary

CALIFORNIA ALL-PURPOSE ACKNOWLEDGMENT

STATE OF CALIFORNIA

County of Alameda }

On NOVEMBER 27TH, 2013 (Date) before me, ANNIE VAN, NOTARY PUBLIC (Here Insert Name and Title of the Officer),

personally appeared ROBERT W. BABCOCK (Name(s) of Signer(s)),

who proved to me on the basis of satisfactory evidence to be the person(s) whose name(s) is/are subscribed to the within instrument and acknowledged to me that he/she/they executed the same in his/her/their authorized capacity(ies), and that by his/her/their signature(s) on the instrument the person(s), or the entity upon behalf of which the person(s) acted, executed the instrument.

I certify under PENALTY OF PERJURY under the laws of the State of California that the foregoing paragraph is true and correct.

Witness my hand and official seal.

Signature _____
Signature of Notary Public

HRS2 **ANNIE VAN** HRS2
COMM. NO. 2036769
NOTARY PUBLIC - CALIFORNIA
ALAMEDA COUNTY
My Comm. Expires Aug. 12, 2017

Place Notary Seal Above

OPTIONAL

Though the information below is not required by law, it may prove valuable to persons relying on the document and could prevent fraudulent removal and reattachment of this form to another document.

Description of Attached Document

Title or Type of Document: _____

Document Date: _____ Number of Pages: _____

Signer(s) Other Than Named Above: _____

Capacity(ies) Claimed by Signer(s)

Signer's Name: _____
☐ Individual
☐ Corporate Officer — Title(s): _____
☐ Partner — ☐ Limited ☐ General
☐ Attorney in Fact
☐ Trustee
☐ Guardian or Conservator
☐ Other: _____

Signer Is Representing:

RIGHT THUMBPRINT OF SIGNER
Top of thumb here

Signer's Name: _____
☐ Individual
☐ Corporate Officer — Title(s): _____
☐ Partner — ☐ Limited ☐ General
☐ Attorney in Fact
☐ Trustee
☐ Guardian or Conservator
☐ Other: _____

Signer Is Representing:

RIGHT THUMBPRINT OF SIGNER
Top of thumb here

© 2007 National Notary Association • 9350 De Soto Ave., P.O. Box 2402 • Chatsworth, CA 91313-2402 • www.NationalNotary.org Item #5907 Reorder: Call Toll-Free 1-800-876-6827

GOODLAN-01 MADA

CERTIFICATE OF LIABILITY INSURANCE

DATE (MM/DD/YYYY) 11/26/2013

THIS CERTIFICATE IS ISSUED AS A MATTER OF INFORMATION ONLY AND CONFERS NO RIGHTS UPON THE CERTIFICATE HOLDER. THIS CERTIFICATE DOES NOT AFFIRMATIVELY OR NEGATIVELY AMEND, EXTEND OR ALTER THE COVERAGE AFFORDED BY THE POLICIES BELOW. THIS CERTIFICATE OF INSURANCE DOES NOT CONSTITUTE A CONTRACT BETWEEN THE ISSUING INSURER(S), AUTHORIZED REPRESENTATIVE OR PRODUCER, AND THE CERTIFICATE HOLDER.

IMPORTANT: If the certificate holder is an ADDITIONAL INSURED, the policy(ies) must be endorsed. If SUBROGATION IS WAIVED, subject to the terms and conditions of the policy, certain policies may require an endorsement. A statement on this certificate does not confer rights to the certificate holder in lieu of such endorsement(s).

PRODUCER (925) 401-3444
R. W. Babcock Insurance Brokerage, Inc.
6600 Koll Center Parkway, Suite 150
Pleasanton, CA 94566

CONTACT NAME:
PHONE (A/C, No, Ext): FAX (A/C, No):
E-MAIL ADDRESS:

INSURER(S) AFFORDING COVERAGE	NAIC #
INSURER A : Travelers Indemnity Company of Connecticut	
INSURER B : Travelers Property Casualty Co of America	
INSURER C :	
INSURER D :	
INSURER E :	
INSURER F :	

INSURED
Goodland Landscape Construction, Inc.
2455 N. Naglee Road, #402
Tracy, CA 95304-7324

COVERAGES CERTIFICATE NUMBER: REVISION NUMBER:

THIS IS TO CERTIFY THAT THE POLICIES OF INSURANCE LISTED BELOW HAVE BEEN ISSUED TO THE INSURED NAMED ABOVE FOR THE POLICY PERIOD INDICATED. NOTWITHSTANDING ANY REQUIREMENT, TERM OR CONDITION OF ANY CONTRACT OR OTHER DOCUMENT WITH RESPECT TO WHICH THIS CERTIFICATE MAY BE ISSUED OR MAY PERTAIN, THE INSURANCE AFFORDED BY THE POLICIES DESCRIBED HEREIN IS SUBJECT TO ALL THE TERMS, EXCLUSIONS AND CONDITIONS OF SUCH POLICIES. LIMITS SHOWN MAY HAVE BEEN REDUCED BY PAID CLAIMS.

INSR LTR	TYPE OF INSURANCE	ADDL INSR	SUBR WVD	POLICY NUMBER	POLICY EFF (MM/DD/YYYY)	POLICY EXP (MM/DD/YYYY)	LIMITS	
A	GENERAL LIABILITY X COMMERCIAL GENERAL LIABILITY CLAIMS-MADE X OCCUR X X, C, & U GEN'L AGGREGATE LIMIT APPLIES PER: POLICY X PRO-JECT LOC	X	X	DT22-CO-5490C01A-TCT-13	8/29/2013	8/29/2014	EACH OCCURRENCE DAMAGE TO RENTED PREMISES (Ea occurrence) MED EXP (Any one person) PERSONAL & ADV INJURY GENERAL AGGREGATE PRODUCTS - COMP/OP AGG	$ 2,000,000 $ 500,000 $ 10,000 $ 2,000,000 $ 4,000,000 $ 4,000,000 $
A	AUTOMOBILE LIABILITY X ANY AUTO ALL OWNED AUTOS SCHEDULED AUTOS HIRED AUTOS NON-OWNED AUTOS	X	X	BA-5490C01A-13-TCT	8/29/2013	8/29/2014	COMBINED SINGLE LIMIT (Ea accident) BODILY INJURY (Per person) BODILY INJURY (Per accident) PROPERTY DAMAGE (PER ACCIDENT)	$ 2,000,000 $ $ $ $
B	X UMBRELLA LIAB X OCCUR EXCESS LIAB CLAIMS-MADE DED X RETENTION $ 10,000			DTSM-CUP-5490C01A-TIL-13	8/29/2013	8/29/2014	EACH OCCURRENCE AGGREGATE	$ 3,000,000 $ 3,000,000 $
B	WORKERS COMPENSATION AND EMPLOYERS' LIABILITY ANY PROPRIETOR/PARTNER/EXECUTIVE OFFICER/MEMBER EXCLUDED? Y / N (Mandatory in NH) If yes, describe under DESCRIPTION OF OPERATIONS below	N / A	X	DTJUB5490C01A13	10/1/2013	8/29/2014	X WC STATU-TORY LIMITS OTH-ER E.L. EACH ACCIDENT E.L. DISEASE - EA EMPLOYEE E.L. DISEASE - POLICY LIMIT	 $ 1,000,000 $ 1,000,000 $ 1,000,000

DESCRIPTION OF OPERATIONS / LOCATIONS / VEHICLES (Attach ACORD 101, Additional Remarks Schedule, if more space is required)
See attached page.

CERTIFICATE HOLDER

City of Sacramento, Risk Management
Attn: Deb Patterson
915th 1 Street, 4th Floor
Sacramento, CA 95814-

CANCELLATION

SHOULD ANY OF THE ABOVE DESCRIBED POLICIES BE CANCELLED BEFORE THE EXPIRATION DATE THEREOF, NOTICE WILL BE DELIVERED IN ACCORDANCE WITH THE POLICY PROVISIONS.

AUTHORIZED REPRESENTATIVE

© 1988-2010 ACORD CORPORATION. All rights reserved.

ACORD 25 (2010/05) The ACORD name and logo are registered marks of ACORD

DESCRIPTION OF OPERATIONS -

Goodland Landscape Construction, Inc. 2455 N. Naglee Road, #402 Tracy, CA 95304-7324	City of Sacramento, Risk Management Attn: Deb Patterson 915th 1 Street, 4th Floor Sacramento, CA 95814-

MCCLATCHY PARK RENOVATION PROJECT (L19136500). THE CITY OF SACRAMENTO, ITS OFFICIALS, EMPLOYEES AND VOLUNTEERS ARE ADDITIONAL INSUREDS PER THE ATTACHED ENDORSEMENT FORMS CG D2 46 08 05 AND CA T3 53 03 10. WAIVER OF SUBROGATION APPLIES TO GENERAL LIABILITY PER FORM CG D3 16 11 11, AUTO LIABILITY PER FORM CA T3 53 03 10 AND TO WORKERS COMPENSATION PER FORM WC 99 03 76.

COVERAGE AFFORDED TO THE ADDITIONAL INSUREDS IS ON A PRIMARY AND NON-CONTRIBUTORY BASIS PER FORMS CG D2 46 08 05 AND CA 00 01 03 10. CERTIFICATE HOLDER WILL BE PROVIDED WITH 30 DAYS NOTICE IN THE EVENT OF CANCELLATION OF COVERAGE (10 DAYS IN THE EVENT OF NON-PAYMENT OF PREMIUM).

Named Insured: Goodland Landscape Construction, Inc.
Policy Number: DT22-CO-5490C01A-TCT-13

AUTHORIZED SIGNATURE

THIS ENDORSEMENT CHANGES THE POLICY. PLEASE READ IT CAREFULLY

BLANKET ADDITIONAL INSURED (CONTRACTORS)

This endorsement modifies insurance provided under the following:
COMMERCIAL GENERAL LIABILITY COVERAGE PART

1. WHO IS AN INSURED — (Section II) is amended to include any person or organization that you agree in a "written contract requiring insurance" to include as an additional insured on this Coverage Part, but:

a) Only with respect to liability for "bodily injury", "property damage" or "personal injury"; and

b) If, and only to the extent that, the injury or damage is caused by acts or omissions of you or your subcontractor in the performance of "your work" to which the "written contract requiring insurance" applies. The person or organization does not qualify as an additional insured with respect to the independent acts or omissions of such person or organization.

2. The insurance provided to the additional insured by this endorsement is limited as follows:

a) In the event that the Limits of Insurance of this Coverage Part shown in the Declarations exceed the limits of liability required by the "written contract requiring insurance", the insurance provided to the additional insured shall be limited to the limits of liability required by that "written contract requiring insurance". This endorsement shall not increase the limits of insurance described in Section **III** — Limits Of Insurance.

b) The insurance provided to the additional insured does not apply to "bodily injury", "property damage" or "personal injury" arising out of the rendering of, or failure to render, any professional architectural, engineering or surveying services, including:

i. The preparing, approving, or failing to prepare or approve, maps, shop drawings, opinions, reports, surveys, field orders or change orders, or the preparing, approving, or failing to prepare or approve, drawings and specifications; and

ii. Supervisory, inspection, architectural or engineering activities.

c) The insurance provided to the additional insured does not apply to "bodily injury" or "property damage" caused by "your work" and included in the "products-completed operations hazard" unless the "written contract requiring insurance" specifically requires you to provide such coverage for that additional insured, and then the insurance provided to the additional insured applies only to such "bodily injury" or "property damage" that occurs before the end of the period of time for which the "written contract requiring insurance" requires you to provide such coverage or the end of the policy period, whichever is earlier.

3. The insurance provided to the additional insured by this endorsement is excess over any valid and collectible "other insurance", whether primary, excess, contingent or on any other basis, that is available to the additional insured for a loss we cover under this endorsement. However, if the "written contract requiring insurance" specifically requires that this insurance apply on a primary basis or a primary and non-contributory basis, this insurance is primary to "other insurance" available to the additional insured which covers that person or organization as a named insured for such loss, and we will not share with that "other insurance". But the insurance provided to the additional insured by this endorsement still is excess over any valid and collectible "other insurance", whether primary, excess, contingent or on any other basis, that is available to the additional insured when that person or organization is an additional insured under such "other insurance".

4. As a condition of coverage provided to the additional insured by this endorsement:

a) The additional insured must give us written notice as soon as practicable of an "occurrence" or an offense which may result in a claim. To the extent possible, such notice should include:

 © 2005 The St. Paul Travelers Companies, Inc.

i. How, when and where the "occurrence" or offense took place;

ii. The names and addresses of any injured persons and witnesses; and

iii. The nature and location of any injury or damage arising out of the "occurrence" or offense.

b) If a claim is made or "suit" is brought against the additional insured, the additional insured must:

i. Immediately record the specifics of the claim or "suit" and the date received; and

ii. Notify us as soon as practicable.

The additional insured must see to it that we receive written notice of the claim or "suit" as soon as practicable.

c) The additional insured must immediately send us copies of all legal papers received in connection with the claim or "suit", cooperate with us in the investigation or settlement of the claim or defense against the "suit", and otherwise comply with all policy conditions.

d) The additional insured must tender the defense and indemnity of any claim or "suit" to any provider of "other insurance" which would cover the additional insured for a loss we cover under this endorsement. However, this condition does not affect whether the insurance provided to the additional insured by this endorsement is primary to "other insurance" available to the additional insured which covers that person or organization as a named insured as described in paragraph 3. above.

5. The following definition is added to SECTION V. — DEFINITIONS:

"Written contract requiring insurance" means that part of any written contract or agreement under which you are required to include a person or organization as an additional insured on this Coverage Part, provided that the "bodily injury" and "property damage" occurs and the "personal injury" is caused by an offense committed:

a. After the signing and execution of the contract or agreement by you;

b. While that part of the contract or agreement is in effect; and

c. Before the end of the policy period.

© 2005 The St. Paul Travelers Companies, Inc.

TRAVELERS INDEMNITY COMPANY OF CONNECTICUT

Named Insured: Goodland Landscape Construction, Inc.
Policy Number: BA-5490C01A-13-TCT

AUTHORIZED SIGNATURE

THIS ENDORSEMENT CHANGES THE POLICY. PLEASE READ IT CAREFULLY.

BUSINESS AUTO EXTENSION ENDORSEMENT

This endorsement modifies insurance provided under the following:

BUSINESS AUTO COVERAGE FORM

With respect to coverage provided by this endorsement, the provisions of the Coverage Form apply unless modified by the endorsement.

GENERAL DESCRIPTION OF COVERAGE — This endorsement broadens coverage. However, coverage for any injury, damage or medical expenses described in any of the provisions of this endorsement may be excluded or limited by another endorsement to the Coverage Part, and these coverage broadening provisions do not apply to the extent that coverage is excluded or limited by such an endorsement. The following listing is a general coverage description only. Limitations and exclusions may apply to these coverages. Read all the provisions of this endorsement and the rest of your policy carefully to determine rights, duties, and what is and is not covered.

A. BROAD FORM NAMED INSURED

B. BLANKET ADDITIONAL INSURED

C. EMPLOYEE HIRED AUTO

D. EMPLOYEES AS INSURED

E. SUPPLEMENTARY PAYMENTS — INCREASED LIMITS

F. HIRED AUTO — LIMITED WORLDWIDE COVERAGE — INDEMNITY BASIS

G. WAIVER OF DEDUCTIBLE — GLASS

H. HIRED AUTO PHYSICAL DAMAGE — LOSS OF USE — INCREASED LIMIT

I. PHYSICAL DAMAGE — TRANSPORTATION EXPENSES — INCREASED LIMIT

J. PERSONAL EFFECTS

K. AIRBAGS

L. NOTICE AND KNOWLEDGE OF ACCIDENT OR LOSS

M. BLANKET WAIVER OF SUBROGATION

N. UNINTENTIONAL ERRORS OR OMISSIONS

PROVISIONS

A. BROAD FORM NAMED INSURED

The following is added to Paragraph **A.1., Who Is An Insured**, of **SECTION II — LIABILITY COVERAGE:**

Any organization you newly acquire or form during the policy period over which you maintain 50% or more ownership interest and that is not separately insured for Business Auto Coverage. Coverage under this provision is afforded only until the 180th day after you acquire or form the organization or the end of the policy period, whichever is earlier.

B. BLANKET ADDITIONAL INSURED

The following is added to Paragraph c. in **A.1., Who Is An Insured**, of **SECTION II — LIABILITY COVERAGE:**

Any person or organization who is required under a written contract or agreement between you and that person or organization, that is signed and executed by you before the "bodily injury" or "property damage" occurs and that is in effect during the policy period, to be named as an additional insured is an "insured" for Liability Coverage, but only for damages to which this insurance applies and only to the extent that person or organization qualifies as an "insured" under the Who Is An Insured provision contained in Section II.

C. EMPLOYEE HIRED AUTO

1. The following is added to Paragraph **A.1., Who Is An Insured**, of **SECTION II — LIABILITY COVERAGE:**

   An "employee" of yours is an "insured" while operating an "auto" hired or rented under a contract or agreement in that "employee's" name, with your permission, while performing duties related to the conduct of your business.

© 2010 The Travelers Indemnity Company.
Includes copyrighted material of Insurance Services Office, Inc. with its permission.

2. The following replaces Paragraph **b.** in **B.5., Other Insurance,** of **SECTION IV — BUSINESS AUTO CONDITIONS:**

   b. For Hired Auto Physical Damage Coverage, the following are deemed to be covered "autos" you own:

   (1) Any covered "auto" you lease, hire, rent or borrow; and

   (2) Any covered "auto" hired or rented by your "employee" under a contract in that individual "employee's" name, with your permission, while performing duties related to the conduct of your business.

   However, any "auto" that is leased, hired, rented or borrowed with a driver is not a covered "auto".

D. EMPLOYEES AS INSURED

The following is added to Paragraph **A.1., Who Is An Insured,** of **SECTION II — LIABILITY COVERAGE:**

Any "employee" of yours is an "insured" while using a covered "auto" you don't own, hire or borrow in your business or your personal affairs.

E. SUPPLEMENTARY PAYMENTS — INCREASED LIMITS

1. The following replaces Paragraph **A.2.a.(2),** of **SECTION II — LIABILITY COVERAGE:**

   (2) Up to $3,000 for cost of bail bonds (including bonds for related traffic law violations) required because of an "accident" we cover. We do not have to furnish these bonds.

2. The following replaces Paragraph **A.2.a.(4),** of **SECTION II — LIABILITY COVERAGE:**

   (4) All reasonable expenses incurred by the "insured" at our request, including actual loss of earnings up to $500 a day because of time off from work.

F. HIRED AUTO — LIMITED WORLDWIDE COVERAGE — INDEMNITY BASIS

The following replaces Subparagraph **(5)** in Paragraph **B.7., Policy Period, Coverage Territory,** of **SECTION IV — BUSINESS AUTO CONDITIONS:**

(5) Anywhere in the world, except any country or jurisdiction while any trade sanction, embargo, or similar regulation imposed by the United States of America applies to and prohibits the transaction of business with or within such country or jurisdiction, for Liability Coverage for any covered "auto" that you lease, hire, rent or borrow without a driver for a period of 30 days or less and that is not an "auto" you lease, hire, rent or borrow from any of your "employees", partners (if you are a partnership), members (if you are a limited liability company) or members of their households.

(a) With respect to any claim made or "suit" brought outside the United States of America, the territories and possessions of the United States of America, Puerto Rico and Canada:

(i) You must arrange to defend the "insured" against, and investigate or settle any such claim or "suit" and keep us advised of all proceedings and actions.

(ii) Neither you nor any other involved "insured" will make any settlement without our consent.

(iii) We may, at our discretion, participate in defending the "insured" against, or in the settlement of, any claim or "suit".

(iv) We will reimburse the "insured" for sums that the "insured" legally must pay as damages because of "bodily injury" or "property damage" to which this insurance applies, that the "insured" pays with our consent, but only up to the limit described in Paragraph **C.,** Limit Of Insurance, of SECTION II — LIABILITY COVERAGE.

(v) We will reimburse the "insured" for the reasonable expenses incurred with our consent for your investigation of such claims and your defense of the "insured" against any such "suit", but only up to and included within the limit described in Paragraph **C.,** Limit Of Insurance, of SECTION II — LIABILITY COVERAGE, and not in addition to such limit. Our duty to make such payments ends when we have used up the applicable limit of insurance in payments for damages, settlements or defense expenses.

(b) This insurance is excess over any valid and collectible other insurance available

© 2010 The Travelers Indemnity Company.
Includes copyrighted material of Insurance Services Office, Inc. with its permission.

to the "insured" whether primary, excess contingent or on any other basis.

(c) This insurance is not a substitute for required or compulsory insurance in any country outside the United States, its territories and possessions, Puerto Rico and Canada.

You agree to maintain all required or compulsory insurance in any such country up to the minimum limits required by local law. Your failure to comply with compulsory insurance requirements will not invalidate the coverage afforded by this policy, but we will only be liable to the same extent we would have been liable had you complied with the compulsory insurance requirements.

(d) It is understood that we are not an admitted or authorized insurer outside the United States of America, its territories and possessions, Puerto Rico and Canada. We assume no responsibility for the furnishing of certificates of insurance, or for compliance in any way with the laws of other countries relating to insurance.

G. WAIVER OF DEDUCTIBLE — GLASS

The following is added to Paragraph **D., Deductible**, of **SECTION III — PHYSICAL DAMAGE COVERAGE:**

No deductible for a covered "auto" will apply to glass damage if the glass is repaired rather than replaced.

H. HIRED AUTO PHYSICAL DAMAGE — LOSS OF USE — INCREASED LIMIT

The following replaces the last sentence of Paragraph **A.4.b., Loss Of Use Expenses**, of **SECTION III — PHYSICAL DAMAGE COVERAGE:**

However, the most we will pay for any expenses for loss of use is $65 per day, to a maximum of $750 for any one "accident".

I. PHYSICAL DAMAGE — TRANSPORTATION EXPENSES — INCREASED LIMIT

The following replaces the first sentence in Paragraph **A.4.a., Transportation Expenses**, of **SECTION III — PHYSICAL DAMAGE COVERAGE:**

We will pay up to $50 per day to a maximum of $1,500 for temporary transportation expense incurred by you because of the total theft of a covered "auto" of the private passenger type.

J. PERSONAL EFFECTS

The following is added to Paragraph **A.4., Coverage Extensions**, of **SECTION III — PHYSICAL DAMAGE COVERAGE:**

Personal Effects

We will pay up to $400 for "loss" to wearing apparel and other personal effects which are:

(1) Owned by an "insured"; and

(2) In or on your covered "auto".

This coverage applies only in the event of a total theft of your covered "auto".

No deductibles apply to this Personal Effects coverage.

K. AIRBAGS

The following is added to Paragraph **B.3., Exclusions**, of **SECTION III — PHYSICAL DAMAGE COVERAGE:**

Exclusion **3.a.** does not apply to "loss" to one or more airbags in a covered "auto" you own that inflate due to a cause other than a cause of "loss" set forth in Paragraphs **A.1.b.** and **A.1.c.**, but only:

a. If that "auto" is a covered "auto" for Comprehensive Coverage under this policy;

b. The airbags are not covered under any warranty; and

c. The airbags were not intentionally inflated.

We will pay up to a maximum of $1,000 for any one "loss".

L. NOTICE AND KNOWLEDGE OF ACCIDENT OR LOSS

The following is added to Paragraph **A.2.a.**, of **SECTION IV — BUSINESS AUTO CONDITIONS:**

Your duty to give us or our authorized representative prompt notice of the "accident" or "loss" applies only when the "accident" or "loss" is known to:

(a) You (if you are an individual);

(b) A partner (if you are a partnership);

(c) A member (if you are a limited liability company);

(d) An executive officer, director or insurance manager (if you are a corporation or other organization); or

(e) Any "employee" authorized by you to give notice of the "accident" or "loss".

© 2010 The Travelers Indemnity Company.
Includes copyrighted material of Insurance Services Office, Inc. with its permission.

M. BLANKET WAIVER OF SUBROGATION

The following replaces Paragraph **A.5., Transfer Of Rights Of Recovery Against Others To Us,** of **SECTION IV — BUSINESS AUTO CONDITIONS:**

5. Transfer Of Rights Of Recovery Against Others To Us

We waive any right of recovery we may have against any person or organization to the extent required of you by a written contract signed and executed prior to any "accident" or "loss", provided that the "accident" or "loss" arises out of operations contemplated by such contract. The waiver applies only to the person or organization designated in such contract.

N. UNINTENTIONAL ERRORS OR OMISSIONS

The following is added to Paragraph **B.2., Concealment, Misrepresentation, Or Fraud,** of **SECTION IV — BUSINESS AUTO CONDITIONS:**

The unintentional omission of, or unintentional error in, any information given by you shall not prejudice your rights under this insurance. However this provision does not affect our right to collect additional premium or exercise our right of cancellation or non-renewal.

© 2010 The Travelers Indemnity Company.
Includes copyrighted material of Insurance Services Office, Inc. with its permission.

Named Insured: GOODLAND LANDSCAPE CONSTRUCTION, INC.
Policy Number: DT22-CO-5490C01A-TCT-13

AUTHORIZED SIGNATURE

by any ordinance, law or building code to include as an additional insured on this Coverage Part is an insured, but only with respect to liability for "bodily injury", "property damage", "personal injury" or "advertising injury" arising out of such operations.

The insurance provided to such state or political subdivision does not apply to:

a. Any "bodily injury," "property damage," "personal injury" or "advertising injury" arising out of operations performed for that state or political subdivision; or

b. Any "bodily injury" or "property damage" included in the "products-completed operations hazard".

J. KNOWLEDGE AND NOTICE OF OCCURRENCE OR OFFENSE

The following is added to Paragraph 2., Duties In The Event of Occurrence, Offense, Claim or Suit, of SECTION IV – COMMERCIAL GENERAL LIABILITY CONDITIONS:

e. The following provisions apply to Paragraph a. above, but only for the purposes of the insurance provided under this Coverage Part to you or any insured listed in Paragraph 1. or 2. of Section II -Who Is An Insured:

(1) Notice to us of such "occurrence" or offense must be given as soon as practicable only after the "occurrence" or offense is known by you (if you are an individual), any of your partners or members who is an individual (if you are a partnership or joint venture), any of your managers who is an individual (if you are a limited liability company), any of your "executive officers" or directors (if you are an organization other than a partnership, joint venture or limited liability company) or any "employee" authorized by you to give notice of an "occurrence" or offense.

(2) If you are a partnership, joint venture or limited liability company, and none of your partners, joint venture members or managers are individuals, notice to us of such "occurrence" or offense must be given as soon as practicable only after the "occurrence" or offense is known by:

(a) Any individual who is:

(i) A partner or member of any partnership or joint venture;

(ii) A manager of any limited liability company; or

(iii) An executive officer or director of any other organization;

that is your partner, joint venture member or manager; or

(b) Any "employee" authorized by such partnership, joint venture, limited liability company or other organization to give notice of an "occurrence" or offense.

(3) Notice to us of such "occurrence" or of an offense will be deemed to be given as soon as practicable if it is given in good faith as soon as practicable to your workers' compensation insurer. This applies only if you subsequently give notice to us of the "occurrence" or offense as soon as practicable after any of the persons described in Paragraphs e. (1) or (2) above discovers that the "occurrence" or offense may result in sums to which the insurance provided under this Coverage Part may apply.

However, if this Coverage Part includes an endorsement that provides limited coverage for "bodily injury" or "property damage" or pollution costs arising out of a discharge, release or escape of "pollutants" which contains a requirement that the discharge, release or escape of "pollutants" must be reported to us within a specific number of days after its abrupt commencement, this Paragraph e. does not affect that requirement.

K. UNINTENTIONAL OMISSION

The following is added to Paragraph 6., Representations, of SECTION IV – COMMERCIAL GENERAL LIABILITY CONDITIONS:

The unintentional omission of, or unintentional error in, any information provided by you which we relied upon in issuing this policy will not prejudice your rights under this insurance. However, this provision does not affect our right to collect additional premium or to exercise our rights of cancellation or nonrenewal in accordance with applicable insurance laws or regulations.

L. BLANKET WAIVER OF SUBROGATION

The following is added to Paragraph 8., Transfer Of Rights Of Recovery Against Others To Us, of SECTION IV – COMMERCIAL GENERAL LIABILITY CONDITIONS:

© 2011 The Travelers Indemnity Company. All rights reserved.

If the insured has agreed in a contract or agreement to waive that insured's right of recovery against any person or organization, we waive our right of recovery against such person or organization, but only for payments we make because of:

a. "Bodily injury" or "property damage" that occurs; or

b. "Personal injury" or "advertising injury" caused by an offense that is committed;

subsequent to the execution of that contract or agreement.

M. AMENDED BODILY INJURY DEFINITION

The following replaces the definition of "bodily injury" in the **DEFINITIONS** Section:

3. "Bodily injury" means bodily injury, mental anguish, mental injury, shock, fright, disability, humiliation, sickness or disease sustained by a person, including death resulting from any of these at any time.

N. CONTRACTUAL LIABILITY- RAILROADS

1. The following replaces Paragraph c. of the definition of "insured contract" in the **DEFINITIONS** Section:

   c. Any easement or license agreement;

2. Paragraph f.(1) of the definition of "insured contract" in the **DEFINITIONS** Section is deleted.

© 2011 The Travelers Indemnity Company. All rights reserved.

b. Return the stolen property, at our expense. We will pay for any damage that results to the "auto" from the theft; or

c. Take all or any part of the damaged or stolen property at an agreed or appraised value.

If we pay for the loss", our payment will include the applicable sales tax for the darnaged or stolen property.

S. **Transfer Of Rights Of Recovery Against Others To Us**

If any person or organization to or for whom we make payment under this coverage form has rights to recover damages from another, those rights are transferred to us. That person or organization must do everything necessary to secure our rights and must do nothing after "accident" or loss" to impair them.

B. General Conditions

1. Bankruptcy

Bankruptcy or insolvency of the "insured" or the insured's" estate will not relieve us of any obligations under this coverage form.

2. Concealment, Misrepresentation Or Fraud

This coverage form is void in any case of fraud by you at any time as it relates to this coverage form. It is also void if you or any other "insured°, at any time, intentionally conceal or misrepresent a material fact concerning:

a. This coverage form;

b. The covered "auto";

c. Your interest in the covered "auto"; or

d. A claim under this coverage form.

3. Liberalization

If we revise this coverage form to provide more coverage without additional premium charge, your policy will automatically provide the additional coverage as of the clay the revision is effective in your state.

4. No Benefit To Bailee — Physical Damage Coverages

We will not recognize any assignment or grant any coverage for the benefit of any person or organization holding, storing or transporting property for a fee regardless of any other provision of this coverage form.

5. Other Insurance

a. For **any** covered "auto" you own, this coverage form provides primary insurance. For any covered "auto" you don't own, the insurance provided by this coverage form is excess over any other collectible insurance. However, while a covered "auto" which is a "trailer" is connected to another vehicle, the Liability Coverage this coverage form provides for the "trailer" is:

(1) Excess while it is connected to a motor vehicle you do not own.

(2) Primary while it is connected to a covered "auto" you own.

b. For Hired Auto Physical Damage Coverage, any covered "auto" you lease, hire, rent or borrow is deemed to be a covered "auto" you own. However, any "auto" that is leased, hired, rented or borrowed with a driver is not a covered "auto".

c. Regardless of the provisions of Paragraph **a.** above, this coverage form's Liability Coverage Is primary for any liability assumed under an "insured contract".

d. When this coverage form and any other coverage form or policy covers on the same basis, either excess or primary, we will pay only our share. Our share is the proportion that the Limit of Insurance of our coverage form bears to the total of the Omits of all the coverage forms and policies covering on the same basis.

6. Premium Audit

a. The estimated premium for this coverage form is based on the exposures you told us you would have when this policy began. We will compute the final premium due when we determine your actual exposures, The estimated total premium will be credited against the final premium due and the first Named Insured will be billed for the balance, if any. The due date for the final premium or retrospective premium is the date shown as the due date on the bill. If the estimated total premium exceeds the final premium due, the first **Named** Insured will get a refund.

b. If this policy is issued for more than one year, the premium for this coverage form will be computed annually based on our rates or premiums in effect at the beginning of each year of the policy.

TRAVELERS

WORKERS COMPENSATION
AND
EMPLOYERS LIABILITY POLICY

ENDORSEMENT WC 99 03 76 (A)—

POLICY NUMBER: DTJ-UB-5490C01-A-13

WAIVER OF OUR RIGHT TO RECOVER FROM OTHERS ENDORSEMENT - CALIFORNIA (BLANKET WAIVER)

We have the right to recover our payments from anyone liable for an Injury covered by this policy. We will not enforce our right against the person or organization named in the Schedule,

The additional premium for this endorsement shall be 2 % of the California workers' compensation premium.

Schedule

Person or Organization	Job Description
ANY PERSON OR ORGANIZATION FOR WHICH THE INSURED HAS AGREED BY WRITTEN CONTRACT EXECUTED PRIOR TO LOSS TO FURNISH THIS WAIVER	

This endorsement changes the policy to which it is attached and is effective on the date issued unless otherwise stated.

(The information below Is required only when this endorsement is issued subsequent to preparation of the policy.)

Endorsement Effective 10/01/13 Policy No. DTJ-UB-5490C01A-13 Endorsement No.

Insured Premium

GOODLAND LANDSCAPE CONSTRUCTION, INC.

Insurance Company Countersigned Robert W Bailey by

TRAVELERS PROPERTY CASUALTY CO. OF AMERICA

DATE OF ISSUE: 10 -01- 13 ST ASSIGN:

WORKER'S COMPENSATION CERTIFICATION

In accordance with Article 5 (commencing at Section 1860), Chapter 1, Part 7, Division 2 of the Labor Code, the below certificate must be signed and filed with the awarding body prior to performing any work under this contract. Labor Code Section 3700, inter alia, states the following:

"Every employer shall secure the payment of compensation in one or more of the following ways:

"(a) By being insured against liability to pay compensation in one or more insurers duly authorized to write compensation insurance in this State.

"(b) By securing from the Director of Industrial Relations a certificate of consent to self-insure, which may be given upon furnishing proof satisfactory to the Director of Industrial Relations of ability to self-insure and to pay any compensation that may become due to his employees.

To be signed by authorized corporate officer or partner or individual submitting the Proposal. If Bidder is: (example)

1. An individual using a firm name, sign: "John Doe, an individual doing business as Blank Company."
2. An individual doing business under his own name, Sign: your name only.
3. A co-partnership, sign: "John Doe and Richard Doe, co-partners doing business as Blank Company, by, John Doe, co-partner.
4. A corporation, sign: "Blank Company, by John Doe, Secretary." (or other title)

I am aware of the provisions of Section 3700 of the Labor Code which require every employer to be insured against liability for worker's compensation or to undertake self-insurance in accordance with the provisions of that code, and I will comply with such provisions before commencing the performance of the work of this contract.

DATE: 12-6-13

Contractor Goodland Landscape Constr. inc

By L Sherwood
Signature
Lindsay Sherwood
Sec/Treasurer

PAY REQUEST APPLICATION

PROJECT NAME AND NUMBER: MCCLATCHY PARK RENOVATION (L19136500)

CONTRACTOR: _____

PURCHASE ORDER NO. (Required): _____ **COST CENTER:** (L19136500)

INVOICE NO.: _____ **PERIOD ENDING DATE:** _____

SUBMITTAL OF A PROGRESS SCHEDULE IS REQUIRED TO BE SUBMITTED WITH THIS PAY REQUEST IN ACCORDANCE WITH CITY'S STANDARD SPECS; NO PROGRESS PAYMENTS WILL BE MADE FOR ANY WORK UNTIL SATISFACTORY SCHEDULE HAS BEEN SUBMITTED TO THE ENGINEER.

ORIG. CONTRACT AMT.		$_____
CHANGE ORDER NO. 1	$_____	
CHANGE ORDER NO. 2	$_____	
CHANGE ORDER NO. 3	$_____	
CHANGE ORDER NO. 4	$_____	
NET CHANGE BY CHANGE ORDERS:	$_____	
TOT ADJUSTED CONTRACT AMT TO DATE:		$_____
BALANCE OF CONTRACT TO FINISH:	$_____	
TOTAL COMPLETE AND STORED TO DATE:		$_____
LESS 5% RETENTION	$_____	
LESS PREVIOUS BILLINGS:	$_____	
AMOUNT DUE THIS INVOICE:		$_____

******Labor Compliance (payrolls etc.) is current and submitted for this Pay Request******

Submitted By _____ **Date:** _____

Submit To: **Department of Parks & Recreation**
915 I Street, 3rd Floor
Sacramento, CA 95814
Attn.: Dennis Day, Project Manager/ Kirsten Wise, Labor Compliance Officer

Approved By (Const. Insp.) _____ **Date:** _____

Approved By (Project Manager) _____ **Date:** _____

Approved By (Labor Compliance) _____ **Date:** _____

In accordance with Public Contract Code §20104.50 the City shall pay Contractor interest on any progress payment which is made by City more than 30 days after City receives an undisputed and properly submitted written payment request. Said interest shall be equal to the rate set forth in CCP§685.010(a), and shall begin to accrue upon the expiration of said 30 day period. Any written request for a progress payment which City determines to be disputed, improper or not suitable for payment for any reason shall be returned to Contractor within 7 days after receipt by City, along with a written statement of the reason or reasons why such request is disputed, improper or not suitable for payment.
(Rev. 9/17/04)

Remit To:

CITY OF SACRAMENTO
Department of Parks and Recreation
Park Planning & Development Services

SCHEDULE OF VALUES

Department of Parks and Recreation
Park Planning & Development Services
915 I Street, 3rd Floor
Sacramento, CA 95814

PROJECT NAME: **McCLATCHY PARK RENOVATION**

CITY PROJ. NO: **L19136500**

CONTRACTOR: GOODLAND LANDSCAPE CONSTRUCTION

ADDRESS: 2455 N NAGLEE ROAD #402
TRACY, CA 95334

PHONE NO: 1.209.835.9956

Payment No. _____
Work Performed Thru _____
Date Payment Submitted _____
Days Expended on Contract _____

Item No.	Item Description	Estimated Quantity	Unit	Unit Price	Authorized Amount	This Estimate			Total Work Completed		Quantity Remaining
						Quantity	$ Amount		Quantity	$ Amount	
	ITEMS OF THE BASE BID:										
1	Site Clearing, Grubbing and Tree Removal	1	LS	$89,000.00	$89,000.00						
2	Construction Staking	1	LS	$7,100.00	$7,100.00						
3	Temporary Construction Fence to Install	1	LS	$10,000.00	$10,000.00						
4	Demolition	1	LS	$110,000.00	$110,000.00						
5	Erosion and Sediment Control for Sites 1 Acre and over	1	LS	$14,100.00	$14,100.00						
6	Disc Golf Tee Signs and Goals to Relocate	1	LS	$3,500.00	$3,500.00						
7	Site Grading	1	LS	$68,700.00	$68,700.00						
8	Standard Manhole No. 3 (w/Trap and Sump) to Construct	3	EA	$3,700.00	$11,100.00						
9	Catch Basin to Construct	1	LS	$22,000.00	$22,000.00						
10	Play Area Drain to Construct	1	LS	$5,490.00	$5,490.00						
11	4" PVC Drain Line to Place	1	LS	$2,272.00	$2,272.00						
12	6" PVC Drain Line to Place	1	LS	$11,000.00	$11,000.00						
13	8" PVC Drain Line to Place	1	LS	$19,500.00	$19,500.00						
14	Electrical System to Install	1	LS	$132,073.00	$132,073.00						
15	Potable Waterline to Install	1	LS	$11,600.00	$11,600.00						
16	Aggregate Base to Place	1	LS	$39,600.00	$39,600.00						
17	Concrete Pavement to Construct	1	LS	$124,000.00	$124,000.00						

Remit To:

CITY OF SACRAMENTO
Department of Parks and Recreation
Park Planning & Development Services

SCHEDULE OF VALUES

Department of Parks and Recreation
Park Planning & Development Services
915 I Street, 3rd Floor
Sacramento, CA 95814

PROJECT NAME: **McCLATCHY PARK RENOVATION**

CITY PROJ. NO: **L19136500**

CONTRACTOR: GOODLAND LANDSCAPE CONSTRUCTION

ADDRESS: 2455 N NAGLEE ROAD #402
TRACY, CA 95334

PHONE NO: 1.209.835.9956

Payment No. _____
Work Performed Thru _____
Date Payment Submitted _____
Days Expended on Contract _____

Item No.	Item Description	Estimated Quantity	Unit	Unit Price	Authorized Amount	This Estimate		Total Work Completed		Quantity Remaining
						Quantity	$ Amount	Quantity	$ Amount	
18	Asphalt Pavement to Place	1	LS	$38,700.00	$38,700.00					
19	Basketball Court Pavement to Place	1	LS	$23,800.00	$23,800.00					
20	Mister Area Pavement to Construct	1	LS	$23,000.00	$23,000.00					
21	Sports Court Surfacing to Construct	1	LS	$9,800.00	$9,800.00					
22	Concrete Track Banding to Construct	1	LS	$11,600.00	$11,600.00					
23	Stabilized Decomposed Granite to Place	1	LS	$42,300.00	$42,300.00					
24	6" Play Area Curb at Concrete Pavement to Construct	1	LS	$10,600.00	$10,600.00					
25	12" Play Area Curb to Construct	1	LS	$17,000.00	$17,000.00					
26	Basketball Court Curb to Construct	1	LS	$9,900.00	$9,900.00					
27	Concrete Tennis Court Curb to Construct	1	LS	$11,500.00	$11,500.00					
28	6" Concrete Mowband to Construct	1	LS	$42,600.00	$42,600.00					
29	9" Concrete Mowband to Construct	1	LS	$6,100.00	$6,100.00					
30	15" Concrete Mowband to Construct	1	LS	$2,220.00	$2,220.00					
31	Play Area Ramps to Construct	2	EA	$2,500.00	$5,000.00					
32	Basketball Court Striping to Install	1	LS	$1,600.00	$1,600.00					
33	Tennis Court Fencing to Install	1	LS	$22,000.00	$22,000.00					
34	Maintenance Gate to Install	1	LS	$2,200.00	$2,200.00					
35	Tennis Court Gate to Install	1	LS	$1,441.00	$1,441.00					
36	Post and Cable Fence to Install	1	LS	$3,686.00	$3,686.00					

Remit To:

CITY OF SACRAMENTO
Department of Parks and Recreation
Park Planning & Development Services

SCHEDULE OF VALUES

Department of Parks and Recreation
Park Planning & Development Services
915 I Street, 3rd Floor
Sacramento, CA 95814

PROJECT NAME: **McCLATCHY PARK RENOVATION**

CITY PROJ. NO: **L19136500**

CONTRACTOR: GOODLAND LANDSCAPE CONSTRUCTION

ADDRESS: 2455 N NAGLEE ROAD #402
TRACY, CA 95334

PHONE NO: 1.209.835.9956

Payment No. _____
Work Performed Thru _____
Date Payment Submitted _____
Days Expended on Contract _____

Item No.	Item Description	Estimated Quantity	Unit	Unit Price	Authorized Amount	This Estimate		Total Work Completed		Quantity Remaining
						Quantity	$ Amount	Quantity	$ Amount	
37	Play Area Fence to Install	1	LS	$28,854.00	$28,854.00					
38	Drinking Fountains to Install	2	EA	$5,300.00	$10,600.00					
39	Picnic Table to Install	6	EA	$2,350.00	$14,100.00					
40	ADA Picnic Table to Install	2	EA	$2,400.00	$4,800.00					
41	Serving Table to Install	1	EA	$1,400.00	$1,400.00					
42	Game Table to Install	1	EA	$2,570.00	$2,570.00					
43	Accessible Game Table to Install	1	EA	$2,600.00	$2,600.00					
44	Small Grill to Install	1	EA	$600.00	$600.00					
45	Group Grill to Install	1	EA	$4,700.00	$4,700.00					
46	Bench to Install	11	EA	$1,400.00	$15,400.00					
47	Backless Bench to Install	7	EA	$1,550.00	$10,850.00					
48	Bike Racks to Install	6	EA	$450.00	$2,700.00					
49	Trash Receptacle to Install	6	EA	$1,000.00	$6,000.00					
50	Fitness Stations to Install	1	LS	$25,400.00	$25,400.00					
51	Picnic Structure to Install	1	LS	$37,000.00	$37,000.00					
52	Play Area Wood Fiber to Install	1	LS	$20,000.00	$20,000.00					
53	Tot Lot Play Structure to Install	1	LS	$92,400.00	$92,400.00					
54	Adventure Area Play Structure to Install	1	LS	$245,190.00	$245,190.00					
55	Swings to Install	1	LS	$9,912.00	$9,912.00					

Remit To:

CITY OF SACRAMENTO
Department of Parks and Recreation
Park Planning & Development Services

SCHEDULE OF VALUES

Department of Parks and Recreation
Park Planning & Development Services
915 I Street, 3rd Floor
Sacramento, CA 95814

PROJECT NAME: **McCLATCHY PARK RENOVATION**

CITY PROJ. NO: **L19136500**

CONTRACTOR: GOODLAND LANDSCAPE CONSTRUCTION

ADDRESS: 2455 N NAGLEE ROAD #402
TRACY, CA 95334

PHONE NO: 1.209.835.9956

Payment No. _____
Work Performed Thru _____
Date Payment Submitted _____
Days Expended on Contract _____

Item No.	Item Description	Estimated Quantity	Unit	Unit Price	Authorized Amount	This Estimate		Total Work Completed		Quantity Remaining
						Quantity	$ Amount	Quantity	$ Amount	
56	Train Climber to Install	1	LS	$2,520.00	$2,520.00					
56	Trolley Climber to Install	1	LS	$1,900.00	$1,900.00					
57	Precast Independent Play Items to Install	1	LS	$82,500.00	$82,500.00					
58	Rubber Mat Under Swings to Install	1	LS	$7,500.00	$7,500.00					
59	Mister Area to Construct	1	LS	$92,900.00	$92,900.00					
60	Play Area Rubber Surfacing to Place	1	LS	$67,440.00	$67,440.00					
61	Basketball Goals to Install	1	LS	$15,000.00	$15,000.00					
62	Drop Shot Goals to Install	1	LS	$7,792.00	$7,792.00					
63	Tennis Court Nets & Posts to Install	1	LS	$5,000.00	$5,000.00					
64	Skate Park to Construct	1	LS	$284,740.00	$284,740.00					
65	Signage to Install	1	LS	$1,350.00	$1,350.00					
66	Interpretive Signage to Install	3	EA	$1,100.00	$3,300.00					
67	Automatic Irrigation System to Install	1	LS	$103,000.00	$103,000.00					
68	15 Gallon Trees to Install	1	LS	$13,300.00	$13,300.00					
69	24" Box Trees to Install	1	LS	$4,600.00	$4,600.00					
70	Shrub & Groundcover Areas to Install	1	LS	$14,000.00	$14,000.00					
71	Landscape Weed Fabric to Place	1	LS	$3,700.00	$3,700.00					
72	Bark Mulch to Install	1	LS	$7,500.00	$7,500.00					
73	Turf Hydroseed to Install	1	LS	$12,700.00	$12,700.00					

Remit To:

CITY OF SACRAMENTO
Department of Parks and Recreation
Park Planning & Development Services

SCHEDULE OF VALUES

Department of Parks and Recreation
Park Planning & Development Services
915 I Street, 3rd Floor
Sacramento, CA 95814

PROJECT NAME: **McCLATCHY PARK RENOVATION**

CITY PROJ. NO: **L19136500**

CONTRACTOR: GOODLAND LANDSCAPE CONSTRUCTION

ADDRESS: 2455 N NAGLEE ROAD #402
TRACY, CA 95334

PHONE NO: 1.209.835.9956

Payment No. _____
Work Performed Thru _____
Date Payment Submitted _____
Days Expended on Contract _____

Item No.	Item Description	Estimated Quantity	Unit	Unit Price	Authorized Amount	This Estimate		Total Work Completed		Quantity Remaining
						Quantity	$ Amount	Quantity	$ Amount	
74	Landscape Maintenance (90 Days)	3	LS	$2,700.00	$8,100.00					
	ADDITIVE ALTERNATES									
A1	Tot Area Shade Canopy to Install	1	LS	$36,800.00	$36,800.00					
A2	Security Cameras to Install	2	EA	$17,500.00	$35,000.00					
A3	Entry Arch to Install	1	LS	$48,000.00	$48,000.00					
A4	Turf Sod to Place	1	LS	not awarding	$0.00					
	TOTALS				**$2,359,800.00**					
	CHANGE ORDERS									
1		1	LS							
2		1	LS							
3		1	LS							
4		1	LS							
5		1	LS							
	TOTAL CHANGE ORDER AMOUNT				**$0.00**					
	TOTAL AMENDED CONTRACT AMOUNT				**$2,359,800.00**					

GUARANTEE

We hereby guarantee the: **MCCLATCHY PARK RENOVATION (L19136500)**

City of Sacramento for one (1) year in accordance with the guarantee required in the specifications. We agree to repair or replace any or all such work, together with all or any other work which may be displaced in so doing, that may be proven defective in workmanship or material within the one-year period from the date of acceptance without any expense whatsoever to the City, ordinary wear and tear and unusual abuse or neglect excepted.

In the event of our failure to comply with the above-mentioned conditions within five (5) days time after being notified in writing, we collectively or separately, do hereby authorize the City to proceed to have the defects repaired and made good at our expense and will pay the costs and damages, including but not limited to any related attorney fees and City staff and administrative expenses, therefor immediately upon demand.

Dated: 12-6-13

Signed: L Sherwood

Lindsey Sherwood
Printed Name

Goodland Landscape Constr. Inc.
Company

2455 N. Naglee Rd #402
Address

Tracy CA 95304

SPECIAL PROVISIONS

SPECIAL PROVISIONS FOR:

MCCLATCHY PARK RENOVATIONS

PN: L19136500

I. GENERAL REQUIREMENTS

A. SCOPE AND LOCATION OF WORK

The work to be performed under these Special Provisions consists of developing improvements to McClatchy Park in Sacramento at 3500 5th Avenue. The improvements will cover 3.84 acres and include, but are not limited to, clearing and grubbing, grading, drainage, irrigation, landscaping, concrete walkways, children's playgrounds, a skate park, two tennis courts, one full-sized and one half-sized basketball courts, large and small picnic areas, play area fencing, shade shelter, water spray area, security cameras, pedestrian lighting, and a jogging path with exercise stations.

B. COMPLETION TIME

The time for the completion of all work is **80 (EIGHTY WORKING DAYS)** from the Notice to Proceed for substantial completion and **90 (NINETY CALENDAR DAYS)** for Plant Establishment from Notice of substantial completion. Contractor shall replace all non-satisfactory plant material prior to the plant establishment period. Should said work not be completed to the satisfaction of the City within said time, the contractor shall pay to the City of Sacramento a sum of ONE THOUSAND DOLLARS ($1,000.00) as liquidated damages and not as a penalty for each calendar day delay after the expiration of such period until the final acceptance of the work by the City and its delivery to the City.

The Notice to Proceed for this project will be issued on March 15, 2014 with the intent that Construction operations will begin no later than April 1, 2014.

C. SPECIFICATIONS

The work to be performed under this contract shall be done in accordance with the Standard Specifications of the City of Sacramento, adopted June 2007, referred to herein as "Standard Specifications" as modified by these Special Provisions, which shall apply to all work.

i. Standard Specification 1-23 Engineer shall also mean Landscape Architect as defined in Standard Specification Section 1-33.

ii. Standard Specifications Section 2-9 SUBCONTRACTORS, add the following after the sub paragraph 2 of the first paragraph in the Standard Specifications.

If a prime Contractor fails to specify a subcontractor, or, if a prime Contractor specifies more than one (1) subcontractor for the same portion of work to be

performed under the Contract which portion exceeds one-half of one percent of the prime Contractor's total bid, the prime Contractor agrees that he or she is fully qualified to perform that portion himself or herself, and that the prime Contractor shall perform that portion himself or herself.

iii. Standard Specifications Section 5-4 COOPERATION OF CONTRACTOR

Add the following after the last paragraph of the Standard Specifications Section 5-4 COOPERATION OF CONTRACTOR with the following:

Contractor shall cooperate with the Landscape Architect, inspectors, and with other Contractors in every way possible. The Inspectors shall designate sequence of construction in case of controversy between Contractors.

iv. Standard Specifications Section 8 MEASUREMENT OF QUANTITIES

Delete the paragraph following Section heading 8-1 and replace it with the following: "The City shall determine quantities of work acceptable under the terms of the contract. Not more than once per month the Contractor shall present to the City a statement showing the amount of labor and materials incorporated into the work."

v. Special Notice Regarding Standard Specifications: The Standard Specifications of the City of Sacramento, dated June 2007, are subject to the provisions of Title 3 of the Sacramento City Code. If there is any conflict between the Standard Specifications as currently written and Title 3 of the Sacramento City Code, the latter shall govern.

vi. Standard Specifications Section 7 PROSECUTION AND PROGRESS. Add the following after the last paragraph of the Standard Specifications. Section 7-2 WORK SCHEDULE AND ADEQUATE RESOURCES. Contractor shall submit with each Pay Request Application an updated Work Schedule. The updated Work Schedule is an integral part of the Pay Request Application. The Pay Request Application will not be accepted for processing without an accompanying updated Work Schedule.

Special Notice Regarding Standard Specifications: The Standard Specifications of the City of Sacramento, dated June 2007, are now subject to the provisions of Title 3 of the Sacramento City Code. If there is any conflict between the Standard Specifications as currently written and Title 3 of the Sacramento City Code, the latter shall govern.

D. SUBCONTRACTORS

The Contractor shall comply with Section 2-9 of the Standard Specifications.

E. SCHEDULE OF UNIT PRICES

The successful lowest responsible bidder shall provide a Schedule of Unit Prices to the Landscape Architect prior to the award of the contract. The form for the Schedule of Unit Prices will be provided to the successful lowest responsible bidder by the Landscape Architect. This schedule of unit prices shall be not be used for payment. Unit prices provided on the schedule of unit prices are for information only and may be used as a basis for determining costs in changes in the work.

F. TIME OF AWARD

Section 3-2, "Time of Award: of the Standard Specifications is hereby amended for this project. Time of Award for this contract shall be made within ninety (90) calendar days after opening of the proposals to the lowest responsible bidder, unless otherwise stated in the contract agreement.

G. PRE-BID INTERPRETATION OF CONTRACT DOCUMENTS

No oral representations or interpretation will be made to any bidder as to the meaning of the contract documents. Request for interpretation shall be made in writing, and delivered to the City at least seven (7) days before the time announced for opening the proposals. Interpretation, where necessary, will be made by the City in the form of an addendum to the contract documents, and when issued, will be sent as promptly as is practical to all parties to whom the bid documents have been issued. All such addenda shall become part of the contract. Request for information regarding this procedure or other similar information, shall be directed to ***Dennis Day*** of Landscape Architecture Division of Planning & Development Services, 915 I Street, 3rd Floor, Sacramento, CA 95814, (916) *808-7633*, FAX (916) 808-8266.

It shall also be the bidder's responsibility to call to the attention of the Landscape Architect any missing pages or drawings in the contract documents including the addenda. These items shall be brought to the attention of the Landscape Architect at least seven (7) calendar days before the bid opening date.

H. PRE-JOB CONFERENCE AND CONSTRUCTION SCHEDULE

The Contractor, after delivery of the contract and at least three (3) calendar days before beginning work, shall notify the Park Construction Inspector and arrange a pre-job conference. The Contractor shall submit to the Park Construction Inspector construction progress schedules in accordance with Section 7-2 of the Standard Specifications.

I. WORKMANSHIP AND MATERIALS

Except as otherwise specified, all materials and equipment incorporated in the work under the contract shall be new. The quality of materials and workmanship shall be in accordance with the provisions of Section 5-17 of the Standard Specifications. Appearance of the finished work is of primary importance in all phases of this project. Any portion of the work may be rejected due to appearance.

J. TRADE NAMES AND ALTERNATIVES

In accordance with Paragraph 5-18 of the Standard Specifications of the City of Sacramento, certain articles or materials to be incorporated in the work may be designated, for convenience, under a trade name or the name of a manufacturer and his catalogue information. The use of an alternative article or material which is of equal quality and of the required characteristics for the purpose intended will be permitted, subject to the approval of the Landscape Architect. The Contractor shall, within **seven (7) calendar days** after the **Bid Summary and Notification of Award Recommendation**, submit for the review of the Landscape Architect, materials, products, equipment and services which differ in any respect from the materials, products, equipment and services specified. Such submittals shall be accompanied by data to substantiate that such items are equal to those specified. The Landscape Architect shall be the sole judge as to the quality and suitability of substitutions and his/her decision is final. Requests for substitutions will not be entertained or considered by the Landscape Architect during the bidding period. No delay or extension of the contract time will be allowed because of the time required for submitting substitutions or for determining their equality. Failure to propose the substitution of any article or service within **seven (7) calendar days** after the **Bid Summary and Notification of Award Recommendation** will be deemed sufficient cause for the denial of request for substitution.

After an approval for a substitution is given, the Contractor shall be responsible for any variation of dimensions, locations, connections, sizes and openings, type and construction of substrate or support to receive materials, etc. The Contractor shall furnish and install any and all additional materials as may be required to perform a complete job without additional cost to the City.

Request for approval shall, in addition to following the directions described above, list any and all deviations in the quality, criteria, characteristics or dimensions from the specified item or items. Any deviations in the quality, criteria, characteristics or dimensions that do not appear in the request for approval and subsequently appear in the shop drawings or in the product or installation, may cause the Contractor to be directed to remove the item or items in total and at his expense, and to provide and install the item or items as originally specified. The mere mention in the request for approval that the item or items will be in accord with the manufacturer's specification or catalog will not be sufficient to alter the specifications unless approval is given to requests, which specifically list in the requesting letter where deviations in the quality, criteria, characteristics or dimensions exist.

K. ACCIDENT PREVENTION

The Contractor's attention is directed to Section 6-9 of the Standard Specifications, which requires compliance with all requirements of the California Occupational Safety and Health Act.

L. LOCATION OF EQUIPMENT AND PIPING

Drawings showing locations of equipment, piping, valves, sprinkler heads, and other appurtenances are diagrammatic only. When installation deviates from the plans and specifications, the Landscape Architect shall be notified for approval. The Contractor will be held responsible for deviations made without first obtaining the Landscape Architect's approval, and shall remove and relocate such items at his own expense if so directed by the Park Construction Inspector.

M. RELIEF FROM MAINTENANCE AND RESPONSIBILITY - RESOLUTION NO. 108 - DATED MARCH 26, 1970

Upon the written request of the Contractor and upon written approval by the City Landscape Architect, the Contractor may be relieved of the duty of maintaining and protecting certain portions of the work, which have been completed in all respects in accordance with the requirements of the contract and to the satisfaction of the City Landscape Architect, and thereafter, except with his consent, the Contractor will not be required to do further work thereon. In addition, such action by the City Landscape Architect will relieve the Contractor of responsibility for injury or damage to said completed portions of the work resulting from use by public traffic or from the action of the elements or from any other cause but not from injury or damage resulting from the Contractor's own operations or from his negligence. Nothing in this section providing for relief from maintenance and responsibility will be construed as relieving the Contractor of full responsibility for repairing or replacing defective work or materials found at any time before either the formal acceptance of the entire contract by the City Council, or during the applicable guarantee period.

N. CONFLICTS

This Section of the Special Provisions shall supersede Section 5-3 of the Standard Specifications. In case of conflict between drawings and specifications, the drawings shall govern in matters of quantity, the specifications in matters of quality. In case of conflict within the drawings involving quantities or within the specifications involving qualities, the greater quantity and the higher quality shall be furnished.

O. PROTECTION OF FACILITIES

The Contractor shall be directed to Section 7-7 of the Standard Specifications, which shall also include protecting the work and materials to be used thereon from damage or loss due to theft, vandalism and malicious mischief. The Contractor shall be held responsible for such damages or loss, which he shall remedy at his expense.

P. PROTECTION OF DRAINAGE FACILITIES

The Contractor shall maintain all new drainage facilities so storm drainage runoff into the new system is clean. Use straw bales around inlets to minimize sediment infiltration during rainy season and control irrigation schedule to minimize runoff during initial planting of turf.

Q. CLEANING

The Contractor shall at all times keep the premises free from accumulations of waste material or rubbish caused by his employees work, and at the completion of work, he shall remove all his rubbish from and about the site and all his tools, scaffolding and surplus materials, and shall leave his work area, including all sidewalks and paving areas "broom clean", or its equivalent, unless more exactly specified in other trade sections of the specifications. In case of dispute, the City may remove the rubbish and charge the cost to the Contractor. The Contractor at his expense shall remove spillage resulting from hauling operations along or across any public traveled way immediately. Water or dust palliative shall be applied if ordered by the Park Construction Inspector for the alleviation or prevention of dust nuisance. Construction operations shall be conducted in such a manner as to cause as little inconvenience as possible to abutting property owners.

R. SUBMITTALS

In accordance with the provisions of Section 5-7, Standard Specifications of the City of Sacramento(except where noted below), the Contractor shall furnish the Landscape Architect with such shop drawings and other descriptive materials as may be necessary to adequately describe the equipment, material, and fabricated items proposed to be furnished under this contract, and to determine their compliance with the specifications, design, and arrangement shown on the contract drawings. Items to conform to Special Provisions and may include but not limited to:

Item	**Product Data**	**Shop Drawings**	**Mock-up or Sample**
PVC Drain Pipe	X		
Drainage Structures	X	X	
Play Area Catch Basin	X	X	
Aggregate Base	X		
Concrete Pavement	X		X
Colored Concrete & Curing Compounds	X		X
Expansion Joint Materials	X		X
Decomposed Granite Paving	X		X
Trex Header Board	X		
Chain Link Fencing and Gates	X	X	
All Playground Equipment and Materials	X	X	
Rubber Mats under Swings	X	X	
Play Area Wood Fiber	X		X
Picnic Shade Structure	X	X	
Drinking Fountain	X		
Regular and Accessible Picnic Tables	X		
Regular and Accessible Game Tables	X		
Serving Table	X		
Bike Rack	X		
Entry Monument Sign	X		
Electrical System	X		
Gate Valves	X		
Remote Control Valve	X		
Valve Boxes and Lids	X		
Item	**Product Data**	**Shop Drawings**	**Mock-up or Sample**

Quick Coupler Valve	X		
Spray Head	X		
Rotor	X		
Main and Domestic Water Line	X		
PVC Pipe Fittings	X		
Solvent Weld for PVC	X		
Swing Joint Assemblies	X		
Irrigation Piping	X		
Control Wire and Connectors	X		
Playground Wood Fiber	X		X
Soil Amendments	X		X
Pre-emergent	X		
Bark Mulch	X		X
Turf Sod	X		
Plant Materials	X		
Landscape Weed Fabric and Staples or Fasteners	X		X
Root Barrier	X		
Painted Pavement Striping and Markings	X		
Security Camera	X		

Two (2) copy of such submittals shall be furnished for review by the Landscape Architect, **a digitally scanned copy** will promptly be returned with approval, rejection, or approval with modification. Neither equipment nor material shall deviate in any way from the approved drawings without prior written approval of the Landscape Architect. Any fabrication of other work performed in advance of such approval shall be done entirely at the risk of the Contractor. The approval of submitted drawings or other descriptive material shall not relieve the Contractor of any obligation or responsibility for fulfillment of the contract as prescribed.

S. RECORD DRAWINGS OF NEW CONSTRUCTION

Should the work as installed differ from the original design, the Contractor shall supply the City with a reproducible Mylar "as-built" drawing with all deviations from the original recorded thereon (layout and grades included). This "as-built" shall be found to be of acceptable quality by the Landscape Architect. Upon request, the City shall supply the Contractor with a Mylar base map for his/her "as-built" drawing. "As-built" drawings shall also be required as stated in Section 36-4 of the Standard Specifications.

T. LICENSE REQUIREMENTS

For this publicly bid project either a General Engineering Contractor "A" that also holds a "C27" License, or a General Engineering Contractor "A" License with a qualified subcontractor "C27" Licensed. The "C27" contractor shall have previous park construction experience, and shall be required to install the irrigation and landscaping for this project. The "A" contractor is categorized as a general engineering contractor as stated in the Business and Professions Code (B&P) Section 7056 of Article 4 Classifications on the California Contractors State License Board website.

U. PROTECTION OF EXISTING CONCRETE AND ASPHALT PAVEMENTS

Contractor shall repair and replace to City standards any existing asphalt or concrete pavements damaged during construction activities at no expense to the City. These pavement areas include street, curb and gutter, sidewalk and park path. Contractor shall meet with City inspector prior to construction activities to document existing conditions of these paved areas.

V. PROJECT COORDINATION

Contractor shall complete all general coordination with the Project Manager the Inspector and other staff as necessary to complete the Project in an efficient workmanlike manner; Submittals; Record Drawings; Maintenance of Traffic, Public Safety, and Convenience; Protection of Existing Improvements; Construction Facilities and Temporary Controls; Temporary Electricity; Project Closeout; and Operation and Maintenance Data for this project.

W. City Code 3.60.020 Determination of lowest responsible bidder
Where any provision of the city charter or this chapter requires competitive bidding and award of the contract for a public project to the lowest responsible bidder, the lowest responsible bidder shall be determined as follows:

a. In determining whether a bidder is responsible, consideration shall be given to: (i) the quality of a public project to be provided by the bidder; (ii) the ability, capacity and skill of the bidder to perform the contract; (iii) the ability of the bidder to perform the contract within the time specified, without delay; (iv) the character, integrity, reputation, judgment, experience and efficiency of the bidder; and (v) the quality of the bidder's performance on previous contracts with the city.

b. The city council may by resolution, from time to time, adopt standard minimum qualifications for bidders on competitively bid contracts for public projects. If such standard minimum qualifications are included in the bid specifications for a contract, no bidder shall be considered "responsible" unless it is determined to be responsible in consideration of the factors set forth in subsection A, above, and also meets such standard minimum qualifications at the time of bid opening. The adoption and use of standard minimum qualifications shall not in any way limit or affect the city's ability to: (i) review information contained in a bid, and additional relevant information, and determine whether the bidder is a responsive and/or responsible bidder; or (ii) establish different and/or additional qualification requirements for specific contracts.

c. The city council may by resolution, from time to time, adopt programs or procedures for providing bid price preferences, including but not limited to, preferences to promote the participation and utilization of small and emerging business enterprises in the city's contracting for public projects. The lowest responsible bidder shall be the responsible bidder whose bid is responsive to the bid requirements, including without limitation any small and emerging business enterprise program requirements included in the bid specifications, and whose bid price is the lowest, after all bid prices are calculated to include any applicable bid price preferences. (Ord. 2002-013 § 2: Ord. 99-007 § 3: prior code § 58.01.102)

X. City of Sacramento Subcontractor and ESBE Participation Verification FM440.

EBE and SBE Certification Statements are due to the contract manager by the close of business two days after bid opening for bid to be responsive.

Y. All publicly bid projects are subject to Performance and Payment Bonds.

Z. California Business and Professions Code, Section 7059 states that the Public Works agency has the authority to select classifications for the project.

AA. BUILDING PERMITS

The Contractor shall be responsible for picking up the project building permit(s) when ready to issue; be responsible for coordinating all necessary City Building Department inspections as well as any special inspections required by the permit(s); and be responsible for finalizing/closing out the building permit(s) with the City Building Department. The City shall pay for all building permit fees and special inspections.

If the Contractor fails to allow for the required building permit and special inspections of the work, the Contractor shall be liable for the costs to remove and reconstruct work to allow for the required inspections and for issuance of the final building permit.

II. ITEMS FROM BASE BID PROPOSAL

PARK IMPROVEMENTS:

Item No. 1 Site Clearing, Grubbing and Tree Removal

This item shall consist of Site Clearing and Grubbing and Tree Removal for the park development in conformance with Sections 12, 13, and 15 of the Standard Specifications and these Special Provisions.

A. Clearing and Grubbing shall conform to Section 12 of the Standard Specifications. All weeds under two inches (2") in height may be disked under to a minimum depth of six inches (6"). All other weeds, turf, shrubs, brush, vines, debris and all other objection material within the project site shall be removed and legally disposed of away from the project site at contractors cost.

B. Tree Removal -Trees to be removed are shown on the plans. Removal of trees shall include removal of stump and tree roots to a point two feet (2') below proposed grade. The Landscape Architect shall make the final determination of tree removal in the field. Removed trees shall become the property of the Contractor and legally disposed of off the project limits at the Contractor's expense.

C. Debris all resulting debris shall become the property of the Contractor and legally disposed of off the project limits at the Contractor's expense.

Payment shall be at the lump sum price bid and shall include full compensation for furnishing all labor, material, tools, equipment and incidentals and for doing all work involved in Site Clearing, Grubbing and Tree Removal as shown on the plans, as specified in these Special Provisions and as directed by the Landscape Architect.

Item No. 2 Construction Staking

This item shall consist of Construction Staking the existing surface to the lines for the park development shown on the plans in conformance of the Standard Specifications and these Special Provisions.

A. Staking:

1. Vertical control is established by the bench mark indicated on the drawings.

2. Layout of work shall be done under the supervision of the Contractor by a City-approved Land Surveyor licensed in California using professional-type instruments. Contractor shall establish elevations and locate and stake all on-site improvements and grading for approval by the City prior to proceeding and shall be responsible for any damage that may be sustained by the City or others from incorrect locations of site improvements. This surveyor shall certify that the completed work is done in a manner that the City can check from conformance as the work progresses.

Payment shall be at the lump sum price bid and shall include full compensation for furnishing all labor, material, tools, equipment and incidentals and for doing all work involved in Construction Staking as shown on the plans, as specified in these Special Provisions and as directed by the Landscape Architect.

Item No. 3 Temporary Construction Fence to Install

This item shall consist of furnishing, installing and maintaining a 6' temporary Chain Link Fence Panel Construction Fencing and 4' Orange Vinyl fencing around construction areas as shown on the Plans in conformance with Section 10 of the Standard Specifications.

A. 6' Chain Link Fencing – Demolition shall begin only after the temporary fence has been installed. 6' temporary construction fence shall remain in place throughout the duration of the project until project acceptance.

B. 4' Orange Vinyl Fencing shall be installed for a limited period of time during construction of the jogging trail and fitness station areas and removed after acceptance of those specific areas, or as directed by the Landscape Architect, in order to minimize disruption of park use and activities. Fencing shall not block walkways or obstruct accessible pathways.

Payment shall be made at the lump sum price bid, and shall include full compensation for furnishing all labor, materials, tools, equipment and incidentals, and for doing all work involved in completing the Temporary Construction Fence to Install as shown on the plans, as specified in these Special Provisions and as directed by the Landscape Architect.

Item No. 4 Demolition

This item shall consist of Demolition and removal of items indicated on the plans in conformance with 13-3 Removing / Relocating of the Standard Specifications and these Special Provisions.

A. Asphalt Pavement shall be removed as shown on the plans. All resulting debris shall be removed and legally disposed of off-site by the Contractor.

B. Concrete Pavement shall be removed as shown on the plans. All resulting debris shall be removed and legally disposed of off-site by the Contractor.

C. Play Area shall be removed. This includes but is not limited to: existing play equipment, 36" concrete pipe, concrete footings, concrete flatwork, 12" pay area concrete curb, benches and trash receptacles. All items removed by the Contractor shall be legally disposed of away from the project site.

D. Irrigation Equipment and Piping shall be removed as shown on the plans. All resulting debris shall be removed and legally disposed of off-site by the Contractor.

E. Lights shall be removed as shown on the plans. All resulting debris shall be removed and legally disposed of off-site by the Contractor.

F. Basketball Standards shall be removed as shown on the plans. All resulting debris shall be removed and legally disposed of off-site by the Contractor.

G. Tennis Court Posts and Nets shall be removed as shown on the plans. All resulting debris shall be removed and legally disposed of off-site by the Contractor.

H. Benches shall be removed as shown on the plans. All resulting debris shall be removed and legally disposed of off-site by the Contractor.

I. Trash & Debris including Concrete shall be removed by the Contractor. Exact limits of concrete, trash and debris removal shall be determined by the Parks Construction Inspector. All items removed by the Contractor shall be legally disposed of off-site.

J. Sawcutting of Pavement shall be required as directed per plans and by the Parks Construction Inspector. Sawcuts shall be neat and clean and shall provide a smooth transition between new and existing features.

K. Chain Link Fence shall be removed as shown on the plans including chain link fabric, posts and concrete footings. All resulting debris shall be removed and legally disposed of away from the project site.

L. Concrete Curb shall be removed as shown on the plans. All resulting debris shall be removed and legally disposed of away from the project site.

M. Concrete Mowband shall be removed as shown on the plans. All resulting debris shall be removed and legally disposed of away from the project site.

N. Holes and depressions resulting from removed items shall be filled, compacted, and brought to finished grade with landscape fill in conformance with Section 14 of the Standard Specifications and as directed by the Landscape Architect.

Payment shall be made at the lump sum price bid and shall include full compensation for furnishing all labor, materials, tools, equipment, and incidentals and for doing all work involved in completing the Demolition as shown on the plans, as specified in these Special Provisions, and as directed by the Landscape Architect.

Item No. 5 Erosion and Sediment Control for Sites 1 Acre and Over

This item shall consist of Erosion and Sediment Control at the locations indicated on the plans in conformance with Sections 13 and16 of the City Standard Specifications and per the State Water Resources Control Board , Order No. 2009-0009-DWQ and these Special Provisions.

A. Housekeeping Practices shall be implemented as follows:

1. Solid Waste Management procedures shall include designated waste collection areas and containers in areas indicated. Arrange for regular removal and disposal from the site of solid waste. On a daily basis, clear site of trash including organic debris, packaging materials, scrap or surplus building materials, as well as domestic waste. Solid Waste Containers shall have a lid/ cover and shall covered it at the end of each work day or when its windy.

2. Material Delivery and Storage Area shall be designated and provided with a secondary containment method, as with berms. Store material on pallets and provide covering or water tight containers for soluble materials. Locate materials in a lockable storage contain or other secure enclosure to insure items cannot be vandalized or displaced during nonworking hours. Cover all storage containers at the end of the day and during rain events. Inspect area weekly and 48 hours prior to a storm event. If a spill is discovered the contractor shall first notify the contractor's and the City's QSP immediately and then have the QSP provide direction on how the spill should be cleaned up and if testing will be required.

3. Concrete Waste Area shall be designated and provide for a temporary pit to be used for concrete truck washout. Dispose of hardened concrete offsite. At no time shall a concrete truck dump its waste and clean its truck into the City storm drains via curb and gutter. Inspect daily to control runoff, and weekly for removal of hardened concrete. If the contractor is has a designated area for the concrete washout on site the contractor shall cover and divert rain water from entering into the washout area. The contractor can use a mobile concrete washout or other similar concrete washout system.

4. Paint and Painting Supplies instructions shall be given to employees and subcontractors regarding reduction of pollutants including material storage, use, and clean up. Inspect site weekly for evidence of improper disposal. A second containment system shall be used to minimize pollutants from escaping the washout areas. In addition the contractor shall place plastic or some other non permeable lining on the ground to minimize contact between the native soil and the pollutants.

5. Vehicle Fueling, Maintenance and Cleaning shall be located in a designated area with a secondary containment, as with berms. . In addition the contractor shall place plastic or some other non permeable lining on the ground to minimize contact between the native soil and the pollutants. Provide equipment with drip pans. Restrict on-site maintenance and cleaning of equipment to a minimum. Inspect area weekly.

6. Hazardous Waste Management instructions shall be given to all employees to prevent the discharge of pollutants from hazardous wastes to the drainage system through proper material use, and waste disposal. Hazardous waste products commonly found on-site include but are not limited to paints & solvents, petroleum products, fertilizers, herbicides & pesticides, soil stabilization products, asphalt products, and concrete curing products. A list of materials expected to be used is listed in the SWPPP. If additional items or items need to be removed the contractor shall notify the City QSP.

7. Dust Control: The Contractor shall comply with all City and County of Sacramento, State of California air pollution control rules, regulations, ordinances, and statues which apply to any work performed pursuant to the contract, including any air pollution control rules, regulations, ordinances, and statutes, specified in the Government Code. The Contractor shall be responsible for the control of dust within the limits of the project at all times including weekends and holidays in addition to normal working days. The Contractor shall take whatever steps are necessary or required by the Inspector to eliminate the nuisance of blowing dust without causing sediment, debris or litter to enter the City storm drain system.

8. Erosion, Sediment, and Pollution Control The Contractor shall be responsible for controlling erosion and sedimentation within the limits of the project. In addition the contractor shall take measures to eliminate any water with pollutants from entering the project site as 'run-on'. The contractor shall be responsible for erosion and sediment control at all times during (working hours) and during normal working days, excluding evenings, weekends and holidays. The Contractor shall prevent sediment and construction debris from entering the City storm drain system.

9. Non-Storm Water, slurry and sediment from concrete or asphalt sawcutting operations shall not be allowed to enter the City storm drain system, but instead must be collected and disposed of, by the Contractor, in some manner approved by the Inspector.

10. Site Cleanup: The Contractor shall keep the project site clean and free of dust, mud, and debris resulting from the Contractor's operations. Daily clean up throughout the project shall be required as the Contractor progresses with the work. Extra precautions and cleanup efforts shall be made prior to weekends and holidays, and before a predicted rain event.

    Daily all paved areas within the limits and surrounding the project shall be cleaned and free of sediments, asphalt, concrete and any other construction debris. The Contractor will not be allowed to clean sediment and debris from the street by using water to wash down streets. The streets will be allowed to be washed only after the streets have been thoroughly swept and/or vacuumed and inlet protection has been placed at all storm drain inlets to catch any remaining sediments from the streets.

    Spillage of earth, gravel, concrete, asphalt, or other materials resulting from hauling operations along or across any public traveled way shall be removed immediately by the Contractor at his expense. If site is not kept sufficiently clean the City will take measures to clean it and back charge the Contractor.

11. More information and details of Best Management Practice the contractor shall refer to the Erosion and Sediment control plan.

B. Construction Site shall be prepared by the Contractor prior to the start of construction and shall be have erosion and sediment control measures in place until the project is complete. Contractor shall ensure to have all erosion and sediment control measures as outlined on the plans in place throughout the year.

C. Erosion and Sediment control measures shall be installed and maintained before the start of construction begins and until disturbed areas are stabilized. All erosion and sediment control measures shall be checked and maintained by the contractor on a minimum of a weekly basis, before and after and during all storms to ensure measures are functioning properly.

D. Erosion Control Plan may not cover all the situations that arise during construction due to unanticipated field conditions. Changes to the erosion and sediment control plan shall be made to meet field by the City's QSP. The contractor shall make the required changes within 48 hours.

E. Exposed / Disturbed Soils that are present, the Contractor shall replant the areas with native compatible, drought-resistant vegetation prior to the end of construction, before

shutting a site down for the wet seasons, or areas not actively being constructed within the last 14 calendar days. In addition the contractor shall use wet suppression to dampen the soil to minimize dust on as need basis. The contractor shall provide a price in the bid to:

1. Install Poly-Acrylamide (PAM) and Copolymer of Acrylamide where the paving is scheduled to be installed (price to install two times)

2. Install straw mulch with tackifier, install where planting is scheduled to be installed. (Price to install two times).

3. Installation Copolymers of Sodium Acrylates and Acrylamides installed on slopes between 5:1 to 3:1. (Price to install two times).

The contractor shall provide a square foot price per application (within the Schedule of Unit Pricing) to install these items as described above. If additional applications are required then the City will prepare a change order to increase the contract amount. If the items are not installed as described above then the City will prepare a deductive change order at the end of the project.

F. Stabilized Construction Entrance shall be installed by the Contractor prior to the commencement of construction including clearing and grubbing. Location of the entrance may be adjusted by the Contractor to facilitate grading operations. All construction traffic entering the paved road must cross the stabilized construction entrance. The stabilized construction entrance shall remain in place until the road base rock course is completed or when the City QSP authorizes the removal of the stabilized construction entrance. The contractor will be responsible for cleaning the stabilized construction entrance if the QSP finds it requires maintenance. All sediment deposited on paved roadways shall be swept at the end of each working day or as necessary.

G. Fiber Rolls shall be installed per the plans and shall be placed around all new and existing drainage structure openings immediately after the structure opening is constructed. All fiber rolls shall be maintained and remain in place until construction is completed.

Payment shall be made at the lump sum bid price and shall include full compensation for furnishing all labor, materials, tools, equipment, and incidentals and for doing all work involved in completing the Erosion and Sediment Control for Sites over 1 Acre as shown on the plans, as specified in these Special Provisions and as directed by the Landscape Architect.

Item No. 6 Disk Golf Tee Signs and Goals to Relocate

This item shall consist of relocating (9) nine Disc Golf Tee Signs and (9) Disk golf Goals to new location as shown on the plans or as directed by the Landscape Architect in conformance with these specifications. **THE DISC GOLF TEE SIGNS AND GOALS SHALL BE MOVED AT THE BEGINNING OF THE PROJECT PRIOR TO THE DEMOLITION OF EXISTING SITE AMENITIES, IN ORDER TO MINIMIZE THE CLOSURE TIME OF THE DISC GOLF COURSE.**

A. Final Locations for Tree Signs and Goals shall be approved by the Landscape Architect.

B. Concrete Footings shall be Portland Cement Concrete Class "D", conforming to Section 10-5 of the Standard Specifications and as shown on Standard Drawing T-270.

Payment shall be made at the lump sum bid price and shall include full compensation for furnishing all labor, materials, tools, equipment, and incidentals and for doing all work involved in completing the Disk Golf Tee Signs and Goals to Relocate as shown on the plans, as specified in these Special Provisions and as directed by the Landscape Architect.

Item No. 7 Site Grading

This item shall consist of Site Grading the existing surface to the lines and grades for the park development shown on the plans in conformance with sections 14 and 15 of the Standard Specifications and these Special Provisions.

A. The Contractor shall meet the lines and grades as shown on the grading plan. Should import or export of soil become necessary to meet the lines and grades as shown on the plans, it shall be at the sole expense of the Contractor. Should export of soil become necessary, it shall be at the discretion of the Landscape Architect to allow the Contractor to make necessary adjustments to balance the earthwork on site at no additional cost to the City. The Contractor shall be solely responsible for earthwork calculations.

B. Relative Compaction for landscaped areas shall be 85%, or as directed by the Landscape Architect.

C. Planter Areas adjacent to paved areas shall be graded so that after settlement the soil will be two inches below top of adjacent pavement or curb.

D. Site grading shall be approved by the Landscape Architect upon completion of grading operations.

E. Excavation Grading shall include removal of soil as required to construction improvements as shown. All excavated soils shall be used in grading operations or disposed of off-site, at the contractor expense.

Payment shall be at the lump sum price bid and shall include full compensation for furnishing all labor, material, tools, equipment and incidentals and for doing all work involved in completing the Site Grading as shown on the plans, as specified in these Special Provisions and as directed by the Landscape Architect.

Item No. 8 Standard Manhole No. 3 (w/Trap & Sump) to Construct

This item shall consist of furnishing and constructing Standard Manhole No. 3 (SDMH's) complete with concrete collars and trap and sumps at the location and elevations shown on the plans and in conformance with Sections 25 and 38 of the Standard Specifications and these Special Provisions.

A. Standard Manhole No. 3 (with Trap and Sump) shall be precast in accordance with Standard Drawing S-90.

B. Concrete shall be Portland Cement Concrete Type II Class "D", as specified in Section 10, and concrete work shall be completed in conformance with applicable requirements of Section 20 of the Standard Specifications.

C. Sanitary Sewer Tap shall consist of the contractor installing the new sanitary sewer taps at the locations shown on the plans.

Payment shall be at the unit price bid per each and shall include full compensation for furnishing all labor, materials, tools, equipment, incidentals and for doing all work necessary in providing and completing the Standard Manhole No. 3 (with trap and sump) to Construct as shown on the Plans, as specified in these Special Provisions and as directed by the Landscape Architect.

Item No. 9 Catch Basin to Construct

This item shall consist of furnishing and constructing a Catch Basin complete with concrete collar at the location and elevation as shown on the plans in conformance with these Special Provisions.

A. Catch Basin may be poured in place or may be precast, Christy model no. U21 or U21S or approved equal.

B. Concrete shall be Portland Cement Concrete Type II Class "D", as specified in Section 10-5, and concrete work shall be completed in conformance with applicable requirements of Section 20 of the Standard Specifications.

C. Grate shall be Christy welded steel grate with cross bars, 24" x 24" with lockdown bolts or approved equal.

Payment shall be at the lump price bid and shall include full compensation for furnishing all labor, material, tools, equipment and incidentals and for doing all work involved in providing and completing the Catch Basin to Construct as shown on the plans, as specified in these Special Provisions and as directed by the Landscape Architect.

Item No. 10 Play Area Drain to Construct

This item shall consist of furnishing and constructing a Play Area Drain complete with steel cover and gravel sump at the location and elevation as shown on the plans in conformance with the Standard Specifications and these Special Provisions.

A. Play Area Drain may be poured in place or may be precast.

B. Concrete shall be Portland Cement Concrete Type II Class "D", as specified in Section 10, and concrete work shall be completed in conformance with applicable requirements of Section 20 of the Standard Specifications.

C. Steel Cover shall be 3/16" diamond plate hot-dipped galvanized after fabrication.

D. Base Rock shall be 3/4" minimum to 1-1/2" maximum washed rock with no fines.

E. Pea Gravel shall be 1/4" minimum to 2" maximum washed rock with no fines.

Payment shall be at the lump sum price bid and shall include full compensation for furnishing all labor, material, tools, equipment and incidentals and for doing all work involved in proving and completing the Play Area Drain to Construct as shown on the plans, as specified in these Special Provisions and as directed by the Landscape Architect.

Item No. 11 4" PVC Drain Line to Place

This item shall consist of furnishing and placing 4" PVC Drain Line complete with cleanouts as shown on the plans in conformity with Sections 10 and 26 of the Standard Specifications and with these Special Provisions.

A. PVC Gravity Drain Line and fittings shall conform to section 10-19 of the Standard Specifications.

B. Trench Backfill shall conform to Drawing T-80 of the Standard Specifications.

Payment shall be made at the lump sum price bid and shall include full compensation for furnishing all labor, materials, tools, equipment and incidentals and for doing all work involved in providing and completing the ***4"*** PVC Drain Line as shown on the plans, as specified in these Special Provisions and as directed by the Landscape Architect.

Item No. 12 6" PVC Drain Line to Place

This item shall consist of furnishing and placing 6" PVC Gravity Drain Line complete with cleanouts as shown on the plans in conformity with Sections 10 and 26 of the Standard Specifications and with these Special Provisions.

A. PVC Gravity Drain Line and fittings shall conform to section 10-19 of the Standard Specifications.

B. Trench Backfill shall conform to Drawing T-80 of the Standard Specifications.

Payment shall be made at the lump sum price bid and shall include full compensation for furnishing all labor, materials, tools, equipment and incidentals and for doing all work involved in providing and completing the ***6"*** PVC Drain Line as shown on the plans, as specified in these Special Provisions and as directed by the Landscape Architect.

Item No. 13 8" PVC Drain Line to Place

This item shall consist of furnishing and placing 8" PVC Gravity Drain Line complete with cleanouts as shown on the plans in conformity with Sections 10 and 26 of the Standard Specifications and with these Special Provisions.

A. PVC Gravity Drain Line and fittings shall conform to section 10-19 of the Standard Specifications.

B. Trench Backfill shall conform to Drawing T-80 of the Standard Specifications.

Payment shall be made at the lump sum price bid and shall include full compensation for furnishing all labor, materials, tools, equipment and incidentals and for doing all work involved in providing and completing the ***8"*** PVC Drain Line to Place as shown on the plans, as specified in these Special Provisions and as directed by the Landscape Architect.

Item No. 14 Electrical System to Install

This item shall consist of furnishing and installing all labor and materials for complete installation of solar powered path lights and picnic shelter, SMUD powered path lights, pole foundations, conductors, conduits, pull boxes, ground rods, circuit breakers, demolition and removals, splicing and connecting of conductors, and miscellaneous related work as shown on the plans in conformance with Sections 34 and these Special Provisions.

A. Contractor shall visit the site prior to submission of his bid, verify all conditions that will affect the performance of his work, make all necessary measurements, and notify the Engineer of any discrepancies between the plans and the actual field conditions, prior to bidding.

B. Contractor shall secure all necessary permits. There shall be no charge for permits that are issued by the City.

C. Contractor shall coordinate his work with the other trades, reviewing areas of possible conflicts with space.

D. Contractor to furnish and install all necessary temporary lighting and job site construction power as required by the 2011 edition of the National Electrical Code, OSHA, and the California State Safety Orders.

E. Prior to ordering any materials, Contractor shall furnish the Landscape Architect with manufacturer's literature and catalog sheets, per General Requirements section, and/or manufacturers' data sheets for the following items:

1. Solar path lights, solar panels, batteries/controllers, and poles
2. Solar picnic light, solar panel and battery/controller
3. AC powered Path lights and poles
4. Wire and conductors
5. Conduits and conduit fittings
6. Ground rods
7. Conduit sealing materials
8. Wire connection and sealing materials
9. Pull boxes

F. Unless otherwise indicated or specified, all materials and methods shall conform to the appropriate current sections of:

1. The City of Sacramento Standards for Public Improvements.

2. The State of California, latest edition of the Department of Transportation Standard Specifications (DTSS), except for measurement and payment requirements.

3. Applicable ASTM specifications as they reasonably apply to this work, except for measurement and payment requirements.

4. Where conflicts occur, most stringent requirements apply.

G. All materials shall be new with the Underwriter's acceptance label attached.

H. All work shall conform to the requirements of the current edition of the National Electrical Code, OSHA, California State Safety Orders and the City regulations.

I. The complete electrical installation shall be permanently grounded per the current edition of the National Electrical Code and local regulations.

J. Contractor to keep accurate and scaled reproducible record plans of the entire electrical installation. Deviations and changes from the Contract Drawings shall be noted on this drawing. All work that is installed under this Contract shall be included on these drawings.

K. The Electrical Contractor shall guarantee, in writing, for a period of one year from date of acceptance, that all work installed shall be free from defects in workmanship and materials. If during this period of one year any such defects appear, the Contractor shall, without cost to the City, remedy such defects. If the Contractor defaults on this guarantee, the City may have such work done and charged to the Contractor.

L. <u>Products</u>

1. Conductors: Shall be copper, crosslink polyethylene insulated, 600V, type "USE" underground service cable, Triangle, Rome, Phelps Dodge or equal.

2. Conduits: Shall be PVC schedule 40, Carlon, PW Pipe, or approved equal. All conduits entering pull boxes shall have end bells.

3. Pull Boxes: Shall be Carson plastic with bronze, tamper-proof hold-down bolts, mounted flush with the finished grade of paving, or planting area, mounted on 12" base of crushed drain rock.

4. Path lights and picnic shelter light: As shown on drawings.

5. Ground rods: Shall be copper-clad steel, ¾ "diameter by 10' long, with suitable phosphor bronze clamps, Blackburn, or approved equal.

6. Concrete Pads shall be installed as shown on the plans in conformance with sections 10, 19, and 24 of the Standard Specifications and with these Specials Provision.

7. Electrical Incidental Parts which are not shown on the plans or specified herein and which are necessary to complete the park lighting, electrical or telephone systems shall be furnished and installed as through such parts were shown on the plans or specified herein.

8. Electronic Marker System shall conform to Section 10-54 of the Standard Specifications, except as amended by the following: no marker locators will be required by the Contractor. Contractor shall supply only enough markers for use in new electrical system. The markers shall be placed within the pull box cover of buried lawn area pull boxes. The marker shall be 3M EMS 4" Extended Range 5' Ball Marker – Power 1402-XR.

9. Metered Service Pedestal shall conform to metered service pedestal per the Standard Specifications detail E-20 and as shown on the plans. All metered service pedestal shall be constructed of stainless steel, galvanized steel with powder coated finish pedestals are not acceptable.

M. Installation

1. The Contractor shall furnish and install the conduits, wiring, boxes and devices per the requirements of the City of Sacramento.

2. Contractor shall install poles plumb and straight on concrete foundations.

3. Contractor is responsible for the removal of all debris from job site caused by this work. Protect and cover all equipment during construction to keep material free from scratches and blemishes.

4. All conductor splices shall be completely watertight, utilizing Scotchcase 85-10 series electrical splicing kits with molds, resin and tapes. Splices shall be prepared as recommended by the manufacturer.

5. All conduits entering underground pull boxes shall have wide flange end bells. Upon completion of the installation of the wire in the conduits, all conduit ends shall be sealed watertight with non-hardening, non-oxidizing and non-corrosive sealing compounds, Permagum, or approved equal.

6. All conductors in conduits shall be installed free from injury, abrasion, cuts or crimping. Where necessary to provide cable lubrication for smooth conductor installation, Contractor may use jet line products "SWP" series, or approved equal.

N. Testing

1. The Contractor shall test the complete installation in the presence of the City Engineer or his representative, upon completion of the project, including tests for grounds, lighting control, panel board circuits, etc.

Payment shall be made at the lump sum price bid and shall include full compensation for furnishing all labor, materials, tools, equipment and incidentals and for doing all work involved completing the Electrical System to Install as shown on the plans, as specified in these Special Provisions and as directed by the Landscape Architect.

Item No. 15 Potable Water Line to Install

This item shall consist of furnishing and installing a Potable Water line, gate valves, pressure relief valves and throttle valves as shown on the plans, in conformance with Sections 10, 13, 14, 17, 27 and 38 of the Standard Specifications and these Special Provisions.

A. Supply Line shall be PVC pipe. Pipe 2-1/2" and under shall be Schedule 40 and pipe 3" and larger shall be Class 315, solvent weld and shall be installed in conformance with Section 10, 17, 24 and 38 of the Standard Specifications.

B. Shut-off Valve shall be a gate valve as specified in Section 27-7 and 38 of the Standard Specifications.

C. Gate Valves shall include gate valve boxes and are to be installed at the locations indicated on the plans in conformance with the applicable requirements of Sections 10, 27 and 38 of the Standard Specifications and these Special Provisions.

D. Pressure Relief and Throttle Valves shall include valve boxes and are to be installed at the locations indicated on the plans in conformance with the applicable requirements of Sections 10, 27, and 38 of the Standard Specifications and these Special Provisions. When used in conjunction, the valves must maintain a pressure between thirty (30) and fifty (50) pounds per square inch (psi) and supply eighteen (18) gallons per minute to the proposed water feature.

Payment shall be at the lump sum price bid and shall include full compensation for furnishing all labor, materials, tools, equipment, and incidentals and for doing all work involved in completing the Potable Water Line to Install as shown on the plans, as specified in these Special Provisions and as directed by the Landscape Architect.

Item No. 16 Aggregate Base to Place

This item shall consist of furnishing and installing aggregate base (AB) under all concrete flatwork, and asphaltic pavement as shown on the plans in conformance with Section 10, and 17 of the Standard Specifications and these Special Provisions.

A. Aggregate Base shall be Class II, per Section 26 of the State Standard Specifications.

B. Recycled Aggregate Base will be allowed and must conform to the requirements of Section 26 of the State Specifications, and tested prior to arrival at the site to verify that it meets the requirements of Class II Aggregate base.

Payment shall be made at the lump sum price bid and shall include full compensation for furnishing all labor, materials, tools, equipment and incidentals and for doing all work involved in providing and completing the Aggregate Base to Place as shown on the plans, as specified in these Special Provisions and as directed by the Landscape Architect.

Item No. 17 Concrete Pavement to Construct

This item shall consist of furnishing and constructing 4" thick Concrete Pavement as shown on the plans in conformance with Sections 10, 18, and 24 of the Standard Specifications and as amended by these Special Provisions.

A. Portland Cement Concrete shall be Type II, Class "C", conforming to Section 10-5 of the Standard Specifications.

B. Expansion & Score Joints shall conform to Section 24-6 of the Standard Specifications with the exception of the following. Expansion joints and score joints shall be located where indicated on the plans and edged to a three-eighths inch (3/8") radius

C. Finish shall conform to Section 24-7 of the Standard Specifications with the following exception: the concrete shall be broomed perpendicular to the sidewalk edge with a medium finish.

D. Test Panel shall be **required** and shall be poured prior to placement of concrete flatwork. The contractor shall construct a test panel of 3' X 3' X 4" thick minimum dimensions. The Contractor shall notify the Landscape Architect and Inspector forty-eight (48) hours prior to test pour. If the test is found to be unsatisfactory by the City, additional test panels shall be constructed and finished until the correct finish is achieved. Workmen and equipment used in the construction of the test panel shall be the same as those used throughout the installation of concrete.

E. Reinforcement shall be intermediate grade and deformed in conformance with "deformed billet-steel bars for concrete reinforcement" (ASTM Designation A615) and with Section 21 of the Standard Specifications. Rebar shall be as shown on the plans.

Payment shall be made at the lump sum price bid and shall include full compensation for furnishing all labor, materials, tools, equipment, and incidentals and for doing all work involved in completing the Concrete Pavement to Construct as shown on the plans, as specified in these Special Provisions and as directed by the Landscape Architect.

Item No. 18 Asphalt Pavement to Place

This item shall consist of furnishing and installing three inches (3") of Asphalt Pavement as shown on plans in conformance with Section 10 and 22 of the Standard Specifications and these Special Provisions and Section 39 of the State Standard Specifications.

A. Asphalt Pavement shall be Type B (medium) and shall conform to Section 22 of the Standard Specifications and Section 39 of the State Standard Specifications.

B. Tack Coat shall be applied and shall be conform to Section 22-7 of the Standard Specifications.

C. Asphalt Binder shall be PG64-10 or PR64-16 and shall conform to Section 39 of the State Standard Specifications.

D. Flood Test: The asphalt pavement should be flooded to check for surface drainage, low areas, high areas greater than 1/8" tolerance. Out of tolerance areas should be repaired, filled to grade or re-installed.

Payment shall be made at the lump sum price bid and shall include full compensation for furnishing all labor, materials, tools, equipment, and incidentals and for doing all the work involved in providing and completing the Asphalt Pavement as shown on the plans, as specified in these Special Provisions and as directed by the Landscape Architect.

Item No. 19 Basketball Court Pavement to Place

This item shall consist of furnishing and installing three inches (3") of Basketball Court Pavement as shown on plans in conformance with Section 10 and 22 of the Standard Specifications and these Special Provisions and Section 39 of the State Standard Specifications.

A. Basketball Court Pavement shall be Type B (medium) and shall conform to Section 22 of the Standard Specifications and Section 39 of the State Standard Specifications.

B. Tack Coat shall be applied and shall be conform to Section 22-7 of the Standard Specifications.

C. Asphalt Binder shall be PG64-10 or PR64-16 and shall conform to Section 39 of the State Standard Specifications.

D. Flood Test: The asphalt pavement should be flooded to check for surface drainage, low areas, high areas greater than 1/8" tolerance. Out of tolerance areas should be repaired, filled to grade or re-installed.

Payment shall be made at the lump sum price bid and shall include full compensation for furnishing all labor, materials, tools, equipment, and incidentals and for doing all the work involved in providing and completing the Basketball Court Pavement to Place as shown on the plans, as specified in these Special Provisions and as directed by the Landscape Architect.

Item No. 20 Mister Area Pavement to Construct

This item shall consist of furnishing materials and constructing 4" thick Mister Area Pavement as shown on the plans in conformity with Sections 10, 18, and 24 of the Standard Specifications and as amended by these Special Provisions and the manufacturer's specifications.

A. Portland Cement Concrete shall be Type II, Class "C", conforming to Section 10-5 of the Standard Specifications.

B. Concrete Stain shall be Lithochrome Tintura Stain manufactured by Scofield Systems, Contact Bob Torres (916) 715-2717, or approved equal. Product shall be applied per manufacturer instructions to provide uniform opaque appearance.

C. Color: Provide color selected by Landscape Architect from manufacturer's premium color

line. Color shall be as shown on the plans or approved equal. Submit sample chip of specified color indicating pigment number and required number of coats. Apply in accordance with manufacturer's instructions.

D. Reinforcement shall be intermediate grade and deformed in conformance with "deformed billet-steel bards for concrete reinforcement" (ASTM Designation A615) and with Section 21 of the Standard Specifications. Rebar shall be as shown on the plans.

E. Curing Compound for Colored Concrete: Provide W-1000 Clear Cure & Seal manufactured by Davis Colors or approved equal. Apply curing compound for colored concrete in accordance with manufacturer's instructions.

F. Water-based Sealant shall be Scofield Selectseal-W, or approved equal, and applied to all Mister Area Pavement surfaces in accordance with the manufacturer's specifications.

G. Expansion & Score Joints shall conform to Section 24-6 of the Standard Specifications with the exception of the following. Expansion joints and score joints shall be located where indicated on the plans and edged to a three-eighths inch (3/8") radius.

H. Finish shall conform to Section 24-7 of the Standard Specifications with the following exception: the concrete shall have a light sandblast finish complying with manufacturer's stain recommendations.

F. Test Panel shall be **required** and shall be poured prior to placement of concrete flatwork. The contractor shall construct a test panel of 3' X 3' X 4" thick minimum dimensions, **one test panel for each of the different colors shown on the plans**. The Contractor shall notify the Landscape Architect and Inspector forty-eight (48) hours prior to test pour. If the test is found to be unsatisfactory by the City, additional test panels shall be constructed and finished until the correct finish is achieved. The concrete sealer shall be applied to one half of test panel. Workmen and equipment used in the construction of the test panel shall be the same as those used throughout the installation of concrete.

Payment shall be at the lump sum price bid and shall include full compensation for furnishing all labor, material, tools, equipment and incidentals and for doing all work involved in completing the Mister Area Pavement to Construct as shown on the plans, as specified in these Special Provisions and as directed by the Landscape Architect.

Item No. 21 Sports Court Surfacing to Construct

This item shall consist of furnishing and installing Sports Court Surfacing at tennis courts and drop shot court as shown on plans in conformance with these Special Provisions.

A. Sports Court Surfacing: Acrylic athletic surfacing system, highly pigmented, comprised of a combination of texture coats and finish coats providing a long-wearing color surface of uniform texture by California Products Corporation "Fortified Plexipave", Flintkote Co.; "Decoralt", Chevron Asphalt Company; "Chevron's Surfacing System"; or approved equal.

B. Colors shall be "Australian Open True Blue" for tennis court playing area and "Sahara

Sand" for surrounding areas. Color for Drop Shot court shall be per plans.

C. Playing Lines: Shall be Plexicolor Line Paint by California Products Corporation, or equivalent by Flintkoke Co., Chevron Asphalt Co., or equal. Color shall be white. No oil-based paint shall be allowed.

D. Asphalt Pavement and Aggregate Base shall be paid under the Asphalt Pavement and Aggregate Base, Bid Items of these Special Provisions.

E. Submittals: Contractor shall submit three complete sets of specialty pavement data within ten days after award of contract. Data shall include color samples, manufacturer's specifications and recommendations, and list of at least three similar applications completed by the Contractor within the past three years.

F. Installation: The surfacing shall be applied to court surface by pouring from a can or a wheeled container to continuous parallel lines and spreading immediately with a rubber-faced squeegee. There shall be surface two applications of the product. The total amount of surface shall not be less than 60 gallons per 1,000 square feet per coat.

1. A surface course of a nominal thickness shall be constructed on the completed pavement using the double straight edge course method.

2. The finished surface course shall be flooded and areas that hold water more than 1/8" shall be filled to grade with a mixture of Carpet Coat Surface.

3. Acrylic Resurface (no asphaltic materials will be permitted):

Acrylic Resurface	55 gals
Water	20-40 gals
Sand (40-60 Mesh)	600-900 lbs.

4. Filled Acrylic Finish Color: After the surfacing application has been completed and allowed to cure, the filled acrylic finish and Plexichrome shall be applied in three (3) applications.

   - Two squeegee applications of filled acrylic finish. Minimum amount of undiluted filled acrylic material to be applied is 12 gallons per 1,000 square feet.
   - One brush or roller application of unfilled acrylic finish. Minimum amount of undiluted unfilled acrylic to be applied is 7 gallons per 1,000 square feet.

5. Playing Lines: Playing lines shall be accurately located and marked by snapping chalked line on the court surface. Standard dimensions shall be used. The lines shall be solidly opaque. No oil base paint will be permitted.

G. Protection: The area shall be protected from traffic during all operations and shall not be opened for use for at least 24 hours after the finished surface has dried completely.

H. Inspection: Contractor shall notify the City at the completion of each stage of the operation and shall allow reasonable time for inspection prior to proceeding with each

following stage until authorization to proceed has been received from the City.

Payment shall be at the lump sum price bid and shall include full compensation for furnishing all labor, material, tools, equipment and incidentals and for doing all work involved in constructing Sports Court Surfacing to Construct as shown on the plans, as specified in these Special Provisions and as directed by the Landscape Architect.

Item No. 22 Concrete Track Banding to Construct

This item shall consist of sawcutting and staining concrete pavement as shown on the plans in conformance with Sections 10, 19, 24 and 38 of the Standard Specifications and as amended by these Special Provisions.

A. Concrete Stain shall be Lithochrom Tintura Stain manufactured by Scofield Systems, Contact Bob Torres (916) 715-2717, or approve equal. Product shall be applied per manufacturer instructions to provide uniform opaque appearance.

B. Color provide color selected by Landscape Architect from manufacturer's complete color line. Color shall be "Old Hickory" or approved equal. Submit sample chip of specified color indicating pigment number and required number of coats. Apply in accordance with manufacturer's instructions.

C. Curing Compound for Colored Concrete: Provide W-1000 Clear Cure & Seal manufactured by Davis Colors or approved equal. Apply curing compound for colored concrete in accordance with manufacturer's instructions.

D. Water-based Sealant shall be Scofield Selectseal-W, or approved equal, and applied to all Mister Area Pavement surfaces in accordance with the manufacturer's specifications.

E. Finish shall conform to Section 24-7 of the Standard Specifications with the following exception: the concrete shall have a light sandblast finish complying with manufacturer's stain recommendations.

F. Test Panel shall be **required** and shall be poured prior to placement of concrete flatwork. The contractor shall construct a test panel of 3' X 3' X 4" thick minimum dimensions, **one test panel for each of the different colors shown on the plans**. The Contractor shall notify the Landscape Architect and Inspector forty-eight (48) hours prior to test pour. If the test is found to be unsatisfactory by the City, additional test panels shall be constructed and finished until the correct finish is achieved. The concrete sealer shall be applied to one half of test panel. Workmen and equipment used in the construction of the test panel shall be the same as those used throughout the installation of concrete.

G. Reinforcement shall be intermediate grade and deformed in conformance with "deformed billet-steel bars for concrete reinforcement" (ASTM Designation A615) and with Section 21 of the Standard Specifications. Rebar shall be as shown on the plans.

Payment shall be made at the lump sum price bid and shall include full compensation for furnishing all labor, materials, tools, equipment, and incidentals and for doing all the work

involved in providing and completing the Concrete Track Banding to Construct as shown on the plans, as specified in these Special Provisions and as directed by the Landscape Architect.

Item No. 23 Stabilized Decomposed Granite to Place

This item shall consist of furnishing and placing cement Stabilized Decomposed Granite Pavement on top of landscape weed fabric as shown on the plans and the detail thereon, in conformance with these Special Provisions.

A. Decomposed Granite: Decomposed granite, hereafter referred to as "DG", shall be Gold Track Fines as available from Granite Construction Co., Felton Quarry, Felton, CA 95018, (831) 335-3445, or "Butte" crushed rock fines, distributed by CL Smith, Woodland, CA (9530) 662-2633, or approved equal.

A. Submittal: Prior to placement of decomposed granite the Contractor shall submit a product sample and material summary sheet to the Project Landscape Architect a representative sample of decomposed granite for use on this project for approval. No decomposed granite shall be placed prior to receiving the Project Landscape Architect's approval.

B. Weed Control shall conform to Section 35-6 of the Standard Specifications.

C. Cement: Portland cement shall be DTSS Type II Modified added to the DG at the ratio of 12-15 lbs. per ton of decomposed aggregate.

D. Mixes: The quantity of water added to the mixture shall be adjusted to the absolute minimum required to permit uniform mixing. The materials shall be mixed in a drum-type mixer on the job or at a central mixing plant. The Contractor shall provide the Engineer sufficient notice of his intent to begin mixing so that the Engineer can provide inspection of the batching and mixing operation.

E. Landscape Weed Fabric shall be DeWitt Weed Barrier Landscape Fabric, 3.5 ounce, 12 yr, Color Brown, UV treated, spunbonded fabric or approved equal. Contact DeWitt Company 1-800-888-9669, or dewittcompany.com.

F. Metal Anchor Pins shall be by Dewitt or approved equal. Contact DeWitt Company 1-800-888-9669, or dewittcompany.com.

G. Test Sample: Provide a 10' by specified width as a test sample, to be approved prior to installation. The Contractor shall notify the Landscape Architect and Inspector forty-eight (48) hours prior to test sample. If the test is found to be unsatisfactory by the City, additional test samples shall be constructed and finished until the correct finish is achieved. Workmen and equipment used in the construction of the test sample shall be the same as those used throughout the installation of stabilized decomposed granite paving.

H. Installation: Evenly spread prepared crushed granite fines/binder material according to plans in two inch (2") lifts on prepared sub-grade. Grade and smooth decomposed

granite material, thoroughly water entire area to a uniformly moisture. Roll each lift with a 2000 to 4000 lbs. static drum roller to form a uniform, smooth surface. Compact each lift to 95%. Do not use vibratory plate compactor or vibration function on roller as vibration separates large aggregate particles.

Upon completion of the final lift, fill any depressions, holes or divots and reroll using the above process.

Allow sufficient curing period of +/- 48 hours prior to use. Take all precautions to protect completed work from traffic until completely dry. Rake off any crusted cement on top of surface and repair or replace all damaged areas due to tire ruts, erosions, compaction failure, etc. until the project is accepted.

I. Finish: The finished surface of the paving shall firm, stable and smooth and even, with a consistent grade, with no high or low points. The paving shall be flush with adjacent concrete containment edge.

Payment shall be made at the lump sum price bid per square foot and shall include full compensation for furnishing all labor, materials, tools, equipment and incidentals and for doing all work involved in completing the Stabilized Decomposed Granite to Place as shown on the plans, as specified in these Special Provisions and as directed by the Landscape Architect.

Item No. 24 6" Play Area Curb at Concrete Pavement to Construct

This item shall consist of constructing 6" Play Area Curb at Concrete Pavement as shown on the plans in conformance with Sections 10, 19, and 24 of the Standard Specifications and these Special Provisions.

A. Portland Cement Concrete shall be Type II, Class "C", conforming to Section 10-5 of the Standard Specifications.

B. Expansion Joints and Score lines shall conform to Section 24-6 of the Standard Specifications with the exception of the following. Expansion joints and score lines shall be placed to align with expansion joints and score lines in adjacent concrete flatwork.

C. Subgrade shall conform to Section 19 of the Standard Specifications, with the following exception: relative compaction shall be 95%.

D. Curb shall be poured monolithically with adjacent concrete flatwork with no score joint.

E. Reinforcement shall be intermediate grade and deformed in conformance with "deformed billet-steel bars for concrete reinforcement" (ASTM Designation A615) and with Section 21 of the Standard Specifications. Rebar shall be as shown on the plans.

Payment shall be at the lump sum price bid, and shall include full compensation for furnishing all labor, materials, tools, equipment and incidentals and for doing all work involved in completing 6" Play Area Curb at Concrete Pavement to Construct as shown on the plans, as specified in these Special Provisions and as directed by the Landscape Architect.

Item No. 25 12" Play Area Curb to Construct

This item shall consist of constructing 12" Play Area Curb to Construct as shown on the plans in conformance with Sections 10, 19, and 24 of the Standard Specifications and these Special Provisions.

A. Portland Cement Concrete shall be Type II, Class "C", conforming to Section 10-5 of the Standard Specifications.

B. Subgrade shall conform to Section 19 of the Standard Specifications, with the following exception: relative compaction shall be 95%.

C. Expansion Joints and Score lines shall conform to Section 24-6 of the Standard Specifications with the exception of the following. Expansion joints shall be place at 20' O.C., and score lines at 10' O.C.

D. Reinforcement shall be intermediate grade and deformed in conformance with "deformed billet-steel bars for concrete reinforcement" (ASTM Designation A615) and with Section 21 of the Standard Specifications. Rebar shall be as shown on the plans.

Payment shall be at the lump sum price bid, and shall include full compensation for furnishing all labor, materials, tools, equipment and incidentals and for doing all work involved in completing 12" Play Area Curb to Construct as shown on the plans, as specified in these Special Provisions and as directed by the Landscape Architect.

Item No. 26 Basketball Court Curb to Construct

This item shall consist of constructing the 9" wide Basketball Court Curb as shown on the plans in conformance with Sections 10, 19, and 24 of the Standard Specifications and these Special Provisions.

A. Portland Cement Concrete shall be Type II, Class "C", conforming to Section 10-5 of the Standard Specifications.

B. Expansion & Score Joints shall conform to Section 24-6 of the Standard Specifications, with the exception of the following: Expansion joints shall be place at 20' O.C. and score joints shall be placed at 10' O.C.

C. Subgrade shall conform to Section 19 of the Standard Specifications, with the following exception: relative compaction shall be 95%.

D. Reinforcement shall be intermediate grade and deformed in conformance with "deformed billet-steel bards for concrete reinforcement" (ASTM Designation A615) and with Section 21 of the Standard Specifications. Rebar shall be as shown on the plans.

Payment shall be at the lump sum price bid and shall include full compensation for furnishing all labor, material, tools, equipment and incidentals and for doing all work involved in completing the Basketball Court Curb to Construct as shown on the plans, as specified in these Special Provisions and as directed by the Landscape Architect.

Item No. 27 Concrete Tennis Court Curb to Construct

This item shall consist of constructing the 12" wide Concrete Tennis Court Curb as shown on the plans in conformance with Sections 10, 19, and 24 of the Standard Specifications and these Special Provisions.

A. Portland Cement Concrete shall be Type II, Class "C", conforming to Section 10-5 of the Standard Specifications.

B. Subgrade shall conform to Section 19 of the Standard Specifications, with the following exception: relative compaction shall be 95%.

C. Finish shall be broomed parallel to the mowband edge with a medium broom finish. All exposed surfaces shall be finished to true lines and grades as shown on the plans.

D. Expansion & Score Joints shall conform to Section 24-6 of the Standard Specifications, with the exception of the following: Expansion joints shall be place at 20' O.C. and score joints shall be placed at 10' O.C.

E. Reinforcement shall be intermediate grade and deformed in conformance with "deformed billet-steel bards for concrete reinforcement" (ASTM Designation A615) and with Section 21 of the Standard Specifications. Rebar shall be as shown on the plans.

Payment shall be at the lump sum price bid and shall include full compensation for furnishing all labor, material, tools, equipment and incidentals and for doing all work involved in completing the Concrete Tennis Court Curb to Construct as shown on the plans, as specified in these Special Provisions and as directed by the Landscape Architect.

Item No. 28 6" Concrete Mowband to Construct

This item shall consist of constructing a 6" Concrete Mowband as shown on the plans in conformance with Section 10, 19, and 24 of the Standard Specifications and these Special Provisions.

A. Portland Cement Concrete shall be Type II, Class "C", conforming to Section 10-5 of the Standard Specifications.

B. Reinforcement shall conform to Section 21 of the Standard Specifications and as shown on the plans.

C. Subgrade shall conform to Section 19 of the Standard Specifications, with the following exception: relative compaction shall be 95%.

D. Finish shall be broomed parallel to the mowband edge with a medium broom finish. All exposed surfaces shall be finished to true lines and grades as shown on the plans.

E. Expansion Joints and Score lines shall conform to Section 24-6 of the Standard Specifications with the exception of the following. Expansion joints shall be placed at 20' O.C., and score lines at 10' O.C.

Payment shall be at the lump sum price bid and shall include full compensation for furnishing all labor, material, tools, equipment and incidentals and for doing all work involved in completing the 6" Concrete Mowband to Construct as shown on the plans, as specified in these Special Provisions and as directed by the Inspector.

Item No. 29 9" Concrete Mowband to Construct

This item shall consist of constructing a 9" Concrete Mowband as shown on the plans in conformance with Section 10, 19, and 24 of the Standard Specifications and these Special Provisions.

A. Portland Cement Concrete shall be Type II, Class "C", conforming to Section 10-5 of the Standard Specifications.

B. Reinforcement shall conform to Section 21 of the Standard Specifications and as shown on the plans.

C. Subgrade shall conform to Section 19 of the Standard Specifications, with the following exception: relative compaction shall be 95%.

D. Finish shall be broomed parallel to the mowband edge with a medium broom finish. All exposed surfaces shall be finished to true lines and grades as shown on the plans.

E. Expansion Joints and Score lines shall conform to Section 24-6 of the Standard Specifications with the exception of the following. Expansion joints shall be placed at 20' O.C., and score lines at 10' O.C.

Payment shall be at the lump sum price bid and shall include full compensation for furnishing all labor, material, tools, equipment and incidentals and for doing all work involved in completing the 9" Concrete Mowband to Construct as shown on the plans, as specified in these Special Provisions and as directed by the Landscape Architect.

Item No. 30 15" Concrete Mowband to Construct

This item shall consist of constructing a 15" Concrete Mowband as shown on the plans in conformance with Section 10, 19, and 24 of the Standard Specifications and these Special Provisions.

A. Portland Cement Concrete shall be Type II, Class "C", conforming to Section 10-5 of the Standard Specifications.

B. Reinforcement shall conform to Section 21 of the Standard Specifications and as shown on the plans.

C. Subgrade shall conform to Section 19 of the Standard Specifications, with the following exception: relative compaction shall be 95%.

D. Finish shall be broomed parallel to the mowband edge with a medium broom finish. All

exposed surfaces shall be finished to true lines and grades as shown on the plans.

E. Expansion Joints and Score lines shall conform to Section 24-6 of the Standard Specifications with the exception of the following. Expansion joints shall be placed at 20' O.C., and score lines at 10' O.C.

Payment shall be at the lump sum price bid and shall include full compensation for furnishing all labor, material, tools, equipment and incidentals and for doing all work involved in completing the 15" Concrete Mowband to Construct as shown on the plans, as specified in these Special Provisions and as directed by the Landscape Architect.

Item No. 31 Play Area Ramps to Construct

This item shall consist of constructing Play Area Ramps as shown on the plans, in conformance with Sections 10, 19, 24, and 38 of the Standard Specifications and as amended by these Special Provisions.

A. Portland Cement Concrete shall be Type II, Class "C", conforming to Section 10-5 of the Standard Specifications.

B. Grooves shall be as shown in Section 38, detail T-60 of the Standard Specifications.

C. Reinforcement shall be intermediate grade and deformed in conformance with "deformed billet-steel bars for concrete reinforcement" (ASTM Designation A615) and with Section 21 of the Standard Specifications. Rebar shall be as shown on the plans.

D. Subgrade shall conform to Section 19 of the Standard Specifications, with the following exception: relative compaction shall be 95%.

E. Finish shall be broomed parallel to the mow strip edge with a medium broom finish. All exposed surfaces shall be finished to true lines and grades as shown on the plans.

F. Expansion & Score Joints shall conform to Section 24-6 of the Standard Specifications with the exception of the following. Expansion joints and score joints shall be located where indicated on the plans and edged to a three-eighths inch (3/8") radius

Payment shall be at the unit price bid and shall include full compensation for furnishing all labor, material, tools, equipment and incidentals and for doing all work involved in completing the Play Area Ramps to Construct as shown on the plans, as specified in these Special Provisions and as directed by the Landscape Architect.

Item No. 31 Basketball Court Striping to Install

This item shall consist of accurately locating and painting two inch (2") wide stripes and pavement markings on the full and half-court basketball courts as shown on the Plans, in conformance Sections 32-2 and 32-3 of the Standard Specifications and these Special Provisions.

A. Paint shall be Plexicolor Line Paint by California Products Corporation, or equivalent by Flintkoke Co., Chevron Asphalt Co., or approved equal. Color shall be white. No oil-based paint shall be allowed. Paint, 12 to 14 mils thick when wet.

B. Tolerance and Appearance shall conform to Section 32-2 of the Standard Specifications with the following exception: that there shall be no more than one-half inch (1/2") deviation from tangent alignment or true arc.

Payment shall be made at the lump sum price bid and shall include full compensation for furnishing all labor, materials, tools, equipment and incidentals and for doing all work involved in completing the Basketball Court Striping to Install as shown on the plans, as specified in these Special Provisions and as directed by the Landscape Architect.

Item No. 32 Tennis Court Fencing to Install

This item shall consist of furnishing and installing Tennis Court Fencing as shown on the Plans in conformance with Sections 10-38 and 31, and Standard Drawing T-90 (with the exception of the concrete footing) of the Standard Specifications and as amended by these Special Provisions.

A. Top Rail and Bottom Tension Wire shall be used. Top Rail and Braces shall be 1.660" O.D. - G.S.P., or cold formed steel pipe, as stated in Paragraph C, and shall weigh 2.27 or 1.83 lbs. per linear foot, respectively.

B. Tie Wires shall be 9 gauge galvanized steel wire, spaced 18 inches apart. Tie wires shall be given at least one complete turn.

C. Fabric shall be 12 foot high of material and installed as stated in Paragraph 10-38 and Section 31 of the Standard Specifications. Fabric shall be knuckled at both the top and bottom. Fabric shall be black vinyl coated.

D. Terminal or Corner Post shall be per plans.

E. Line Post shall be per plans.

F. 3/8" Truss Rod and Turnbuckle shall be galvanized and installed as shown on Drawing C.E. 11 of the Standard Specifications.

G. Post Tops, Stretcher Bars and other required fittings and hardware shall be hot-dip galvanized and shall be of malleable iron, cast iron, or pressed steel.

H. Concrete Footings shall be Class D Portland cement type II concrete conforming to Sections 10, 31 and Drawing T-90 of the Standard Specifications.

Payment shall be made at the lump sum price bid and shall include full compensation for furnishing all labor, materials, tools, equipment, incidentals, and for doing all work involved in completing the Tennis Court Fencing to Install as shown on the Plans, as specified in these Special Provisions and as directed by the Landscape Architect.

Item No. 34 Maintenance Gate to Install

This item shall consist of furnishing and installing a Double Chain Link Gate as shown on the plan in conformance with Section 10-38 and 31 and Standard Drawing T-90 of the Standard Specifications and these Special Provisions.

A. Gates shall be two 12' tall by 5' wide with horizontal and vertical supports. Corners shall be jointed by heavy pressed steel fittings. Gate frame shall be equipped with adjustable truss assemblies and complete malleable iron hinges, catch, stops and center rest. Hinges shall permit the gate to swing back against fence 180 degrees as required. Gate latch shall conform to handicap accessibility standards. Fabric shall be of material and installed as stated in Paragraph 10-38 and Section 31 of the Standard Specifications.

B. Tie Wires shall be 9 gauge galvanized steel wire, spaced 18 inches apart. Tie wires shall be given at least one complete turn.

C. Fabric shall be 12 foot high of material and installed as stated in Paragraph 10-38 and Section 31 of the Standard Specifications.

D. Terminal or Corner Post shall be per plans, of high tensile strength steel pipe manufactured from cold formed steel conforming to ASTM A569 and weighing 5.79 or 4.64 lbs. per linear foot, respectively.

E. 3/8" Truss Rod and Turnbuckle shall be galvanized and installed as shown on Drawing C.E. 11 of the Standard Specifications.

F. Post Tops, Stretcher Bars and other required fittings and hardware shall be hot-dip galvanized and shall be of malleable iron, cast iron, or pressed steel.

G. Concrete Footings shall be Class D Portland cement type II concrete conforming to Sections 10, 31 of the Standard Specifications.

H. Drop Bolt – Shall be by Lecinox Model # VSFQFAL with adapter #6403 or approved equal and it is available through Hoover Fence Co. The Drop Bolt shall be installed as specified by the manufacture.

I. Fork Latch assembly shall be commercial grade and shall be able to accommodate a minimum of 3/8" pad lock shank.

J. Gate Hinges shall be 4" pressed steel butt hinges and shall be galvanized and installed as specified by manufacturer.

Payment shall be made at the lump sum price bid and shall include full compensation for furnishing all labor, materials, tools, equipment, incidentals, and for doing all work involved in Maintenance Gate to Install as shown on the plan, as specified in these Special Provisions and as directed by the Landscape Architect.

Item No. 35 Tennis Court Gate to Install

This item shall consist of furnishing and installing 6' – 8' Tennis Court Gate as shown on the Plans in conformance with Section 10-38, 31 and Standard Drawing T-90 of the Standard Specifications and as amended by these Special Provisions.

A. Gate Frame shall be 1.625" O.D. - G.S.P., or cold formed steel pipe, as stated in Paragraph C, and shall weigh 2.27 or 1.83 lbs. per linear foot, respectively.

B. Tie Wires shall be 9 gauge galvanized steel wire, spaced 18 inches apart. Tie wires shall be given at least one complete turn.

C. Fabric shall be full height of gate, of material and installed as stated in Paragraph 10-38 and Section 31 of the Standard Specifications. Fabric shall be knuckled at both top and bottom.

D. Joints and Caps and other required fittings and hardware shall be hot-dip galvanized and shall be of malleable iron, cast iron, or pressed steel.

E. Concrete Footings shall be Class D Portland cement concrete conforming to Sections 10, 31 and Drawing T-90 of the Standard Specifications. This item shall consist of furnishing and installing base boards on the 8' Chain Link Fence as shown on the Plans in conformance with Section 10-38, 31 and Standard Drawing T-90 of the Standard Specifications and as amended by these Special Provisions.

F. Hinges shall be 4" pressed steel butt hinges. Hinges shall be galvanized per manufacturer's instructions.

Payment shall be made at the lump sum price bid and shall include full compensation for furnishing all labor, materials, tools, equipment, incidentals, and for doing all work involved in completing the Tennis Court Gate to Install as shown on the Plans, as specified in these Special Provisions and as directed by the Landscape Architect.

Item No. 36 Post and Cable Fence to Install

This item shall consist of furnishing and installing a Post and Cable Fence to Install at the locations shown on the plans, in conformance with the Standard Specifications and these Special Provisions.

A. Post and Cable Fence shall be as shown on the plans.

B. All bolts and cable clamps shall be galvanized steel to minimize rust.

C. Concrete Footing shall be Portland Cement Concrete Class "C", conforming to Section 10-1/5 of the Standard Specifications.

Payment shall be made at the lump sum price bid and shall include full compensation for furnishing all labor, materials, tools, equipment and incidentals and for doing all work involved in completing the Post and Cable Fence to Install as shown on the plans, as specified in these Special Provisions and as directed by the Landscape Architect.

Item No. 37 Play Area Fence to Install

This item shall consist of furnishing and installing a 3' tall ornamental fusion welded steel Play Area Fence with E-Coating as shown on the plan and the details in conformance with these Special Provisions.

A. Play Area Fence shall be per plan or approved equal and installed per manufacturer's instructions. Fence shall be powder coated. Color per plans.

B. Concrete Footings shall be installed as specified on the plans and shall be Class "C" or "D" Portland Cement Concrete, conforming to Paragraph 10-1/5 of the Standard Specifications. Concrete Footings shall be per manufacturer specification.

Payment shall be made at the lump sum price bid and shall include all labor, tools, materials, equipment, and incidentals as necessary to complete Play Area Fence to Install as shown on the plan and as specified in these Special Provisions and directed by the Landscape Architect.

Item No. 38 Drinking Fountain to Install

This item consists of furnishing and installing an accessible Drinking Fountain with a Jug Filler, and associated Drain, Cleanout, Drain Pipe and Supply Line as shown on the plans and in conformance with these Special Provisions.

A. Drinking Fountain Assembly shall be MDF M-23-2 with Jug Filler, or approved equal. Color shall be as indicated on the plans. Nibco T-113-LF valve required. Freeze-proof valves are not required.

Distributed by: Most Dependable Fountains, (800) 552-6331, fax (901) 867-0159 or Husband and Associates: 925-426-5001

B. 1" Supply Line shall be PVC pipe, Schedule 40, solvent weld with Schedule 80 fittings and shall be installed in conformance with Section 10 and Section 36 of the Standard Specifications.

C. Disinfection of the domestic water line shall be in conformance with Standard Specifications Section 27-12 – Disinfection of Water Mains. Delete the following paragraph Section 27-12, 5, e. and replace it with the following: "Twenty-Four (24) hours after flushing the chlorinated water from the domestic main the contractor will collect samples for testing." The samples shall be bacteriology tested for the items listed in Section 27-12, 5, f.

D. Two (2) Gate Valves with blow-off valves shall be installed in the water supply line in concrete valve boxes with locking tops. Gate valves shall be key-operated, size as shown on the plans.

E. Drinking Fountain Drain shall be constructed as shown on the drawings. Concrete shall be Type II Class "D", as specified in Section 10 and concrete work shall be completed in conformance with applicable requirements of Section 30 of the Standard Specifications.

F. Drain Line shall be ABS or PVC pipe, Schedule 40, solvent weld with PVC DWV fittings and shall be installed in conformance with Section 10 and Section 36 of the Standard Specifications.

G. Drain Grate shall be No. 3 Round Drain, J. R. Smith Model 2110 series with vandal proof grate Model U or approved equal.

H. Drinking Fountain Cleanout shall be constructed as shown on the drawings. Concrete shall be Type II Class "D", as specified in Section 10 and concrete work shall be completed in conformance with applicable requirements of Section 30 of the Standard Specifications.

I. **ALL Bolts** shall be installed as specified by the manufacturer and shall be provided by the Contractor. All exposed bolts shall be cut to 3 exposed threads and all anchor bolts/ nuts shall be tack welded and all remaining exposed bolts/ nuts shall be tightened and secured with Loctite Adhesive, red 271 for a permanent installation.

J. Concrete Footing shall be Portland Cement Concrete Type II Class "D", as specified in Section 10 and installed in conformance with Section 20 of the Standard Specifications and the manufacturer's specifications.

Payment shall be made at the unit price bid and shall include full compensation for furnishing all labor, materials, tools, equipment and incidentals and for doing all work involved in Drinking Fountain to install as shown on the plans, as specified in these Special Provisions and as directed by the Landscape Architect.

Item No. 39 Picnic Table to Install

This item shall consist of furnishing and installing picnic table as shown on the plans in conformance with these Special Provisions and the manufacturer's specifications.

A. Picnic Table shall be per plans, or approved equal, and installed per manufacturer's instructions

B. Distributed by: *David O'Keefe Company, (800) 368-1366, Contact Jeff Whitman.*

C. **ALL Bolts** shall be installed as specified by the manufacturer and shall be provided by the Contractor. All exposed bolts shall be cut to 3 exposed threads and all anchor bolts/ nuts shall be tack welded and all remaining exposed bolts/ nuts shall be tightened and secured with Loctite Adhesive, red 271 for a permanent installation

Payment shall be made at the unit price bid, and shall include full compensation for furnishing all labor, materials, tools, equipment and incidentals and for doing all work involved in completing Picnic Table to Install as shown on plans, as specified in these Special Provisions and as directed by the Landscape Architect.

Item No. 40 ADA Picnic Table to Install

This item shall consist of furnishing and installing ADA Picnic Table as shown on the plans in conformance with these Special Provisions and the manufacturer's specifications.

A. ADA Picnic Table shall be per plans, or approved equal, and installed per manufacturer's instructions

B. Distributed by: *David O'Keefe Company, (800) 368-1366, Contact Jeff Whitman.*

C. **ALL Bolts** shall be installed as specified by the manufacturer and shall be provided by the Contractor. All exposed bolts shall be cut to 3 exposed threads and all anchor bolts/ nuts shall be tack welded and all remaining exposed bolts/ nuts shall be tightened and secured with Loctite Adhesive, red 271 for a permanent installation

Payment shall be made at the unit price bid, and shall include full compensation for furnishing all labor, materials, tools, equipment and incidentals and for doing all work involved in completing ADA Picnic Table to Install as shown on plans, as specified in these Special Provisions and as directed by the Landscape Architect.

Item No. 41 Serving Table to Install

This item shall consist of furnishing and installing Serving Table as shown on the plans in conformance with these Special Provisions and the manufacturer's specifications.

A. Serving Table shall be per plans, or approved equal, and installed per manufacturer's instructions

B. Distributed by: *David O'Keefe Company, (800) 368-1366, Contact Jeff Whitman.*

C. **ALL Bolts** shall be installed as specified by the manufacturer and shall be provided by the Contractor. All exposed bolts shall be cut to 3 exposed threads and all anchor bolts/ nuts shall be tack welded and all remaining exposed bolts/ nuts shall be tightened and secured with Loctite Adhesive, red 271 for a permanent installation

Payment shall be made at the unit price bid, and shall include full compensation for furnishing all labor, materials, tools, equipment and incidentals and for doing all work involved in completing Serving Table to Install as shown on plans, as specified in these Special Provisions and as directed by the Landscape Architect.

Item No. 42 Game Table to Install

This item shall consist of furnishing and installing Game Table as shown on the plans in conformance with these Special Provisions and the manufacturer's specifications.

A. Game Table shall be per plans, or approved equal, and installed per manufacturer's instructions

B. Distributed by: *David O'Keefe Company, (800) 368-1366, Contact Jeff Whitman.*

C. **ALL Bolts** shall be installed as specified by the manufacturer and shall be provided by the Contractor. All exposed bolts shall be cut to 3 exposed threads and all anchor bolts/ nuts shall be tack welded and all remaining exposed bolts/ nuts shall be tightened and secured with Loctite Adhesive, red 271 for a permanent installation

Payment shall be made at the unit price bid, and shall include full compensation for furnishing all labor, materials, tools, equipment and incidentals and for doing all work involved in completing Game Table to Install as shown on plans, as specified in these Special Provisions and as directed by the Landscape Architect.

Item No. 43 Accessible Game Table to Install

This item shall consist of furnishing and installing Accessible Game Table as shown on the plans in conformance with these Special Provisions and the manufacturer's specifications.

A. Accessible Game Table shall be per plans, or approved equal, and installed per manufacturer's instructions

B. Distributed by: *David O'Keefe Company, (800) 368-1366, Contact Jeff Whitman.*

C. **ALL Bolts** shall be installed as specified by the manufacturer and shall be provided by the Contractor. All exposed bolts shall be cut to 3 exposed threads and all anchor bolts/ nuts shall be tack welded and all remaining exposed bolts/ nuts shall be tightened and secured with Loctite Adhesive, red 271 for a permanent installation

Payment shall be made at the unit price bid, and shall include full compensation for furnishing all labor, materials, tools, equipment and incidentals and for doing all work involved in completing Accessible Game Table to Install as shown on plans, as specified in these Special Provisions and as directed by the Landscape Architect.

Item No. 44 Small Grill to Install

This item shall consist of furnishing and installing a Small Grill as shown on the plans in conformance with these Special Provisions and the manufacturer's specifications.

A. Small Grills shall be per plans, or approved equal, and installed per manufacturer's instructions.

B. **ALL Bolts** shall be installed as specified by the manufacturer and shall be provided by the Contractor. All exposed bolts shall be cut to 3 exposed threads and all anchor bolts/ nuts shall be tack welded and all remaining exposed bolts/ nuts shall be tightened and secured with Loctite Adhesive, red 271 for a permanent installation.

Payment shall be made at the unit price bid, and shall include full compensation for furnishing all labor, materials, tools, equipment, and incidentals and for doing all work involved in installing a Small Grill to Install as shown on the plans, as specified in these Special Provisions and as directed by the Landscape Architect.

Item No. 45 Group Grill to Install

This item shall consist of furnishing and installing a precast group grill as shown on the plans in conformance with these Special Provisions and the manufacturer's specifications.

A. Group Grill shall be per plans, or approved equal, and installed per manufacturer's instructions.

B. **ALL Bolts** shall be installed as specified by the manufacturer and shall be provided by the Contractor. All exposed bolts shall be cut to 3 exposed threads and all anchor bolts/ nuts shall be tack welded and all remaining exposed bolts/ nuts shall be tightened and secured with Loctite Adhesive, red 271 for a permanent installation.

Payment shall be at the unit price bid, and shall include full compensation for furnishing all labor, material, tools, equipment and incidentals and for doing all work involved in completing Group Grill to Install as shown on the plans, as specified in these Special Provisions and directed by the Landscape Architect.

Item No. 46 Bench to Install

This item shall consist of furnishing and installing a Bench as shown on the plans in conformance with these Special Provisions and the manufacturer's specifications.

A. Bench shall be per plans, or approved equal and installed per manufacturer's instructions.

B. **ALL Bolts** shall be installed as specified by the manufacturer and shall be provided by the Contractor. All exposed bolts shall be cut to 3 exposed threads and all anchor bolts/ nuts shall be tack welded and all remaining exposed bolts/ nuts shall be tightened and secured with Loctite Adhesive, red 271 for a permanent installation.

Payment shall be made at the unit price bid, and shall include full compensation for furnishing all labor, materials, tools, equipment and incidentals and for doing all work involved in completing Bench to Install as shown on plans, as specified in these Special Provisions and as directed the Landscape Architect.

Item No. 47 Backless Bench to Install

This item shall consist of furnishing and installing a Backless Bench as shown on the plans in conformance with these Special Provisions and the manufacturer's specifications.

A. Backless Bench shall be per plans, or approved equal and installed per manufacturer's instructions.

B. **ALL Bolts** shall be installed as specified by the manufacturer and shall be provided by the Contractor. All exposed bolts shall be cut to 3 exposed threads and all anchor bolts/ nuts shall be tack welded and all remaining exposed bolts/ nuts shall be tightened and secured with Loctite Adhesive, red 271 for a permanent installation.

Payment shall be made at the unit price bid, and shall include full compensation for furnishing all labor, materials, tools, equipment and incidentals and for doing all work involved in completing Backless Bench to Install as shown on plans, as specified in these Special Provisions and as directed the Landscape Architect.

Item No. 48 Bike Racks to Install

This item shall consist of furnishing and installing individual Bike Racks as shown on the plans in conformance with these Special Provisions and the manufacturer's specifications.

A. Bike Rack shall be per plans, or approved equal, and installed per manufacturer's instructions.

B. Concrete Footing shall be Portland Cement Concrete Type II Class "D", as specified in Section 10 and installed in conformance with Section 20 of the Standard Specifications and the manufacturer's specifications.

C. **ALL Bolts** shall be installed as specified by the manufacturer and shall be provided by the Contractor. All exposed bolts shall be cut to 3 exposed threads and all anchor bolts/ nuts shall be tack welded and all remaining exposed bolts/ nuts shall be tightened and secured with Loctite Adhesive, red 271 for a permanent installation.

Payment shall be at the unit price bid, and shall include full compensation for furnishing all labor, material, tools, equipment and incidentals and for doing all work involved in completing the Bike Racks to Install as shown on the plans, as specified in these Special Provisions and directed by the Landscape Architect.

Item No. 49 Trash Receptacle to Install

This item shall consist of furnishing and installing a Trash Receptacle as shown on the plans in conformance with these Special Provisions and the manufacturer's specifications.

A. Trash Receptacle shall be per plans, or approved equal, and installed per manufacturer's instructions.

B. **ALL Bolts** shall be installed as specified by the manufacturer and shall be provided by the Contractor. All exposed bolts shall be cut to 3 exposed threads and all anchor bolts/ nuts shall be tack welded and all remaining exposed bolts/ nuts shall be tightened and secured with Loctite Adhesive, red 271 for a permanent installation.

Payment shall be made at the unit price bid, and shall include full compensation for furnishing all labor, materials, tools, equipment and incidentals and for doing all work involved in completing Trash Receptacle to Install as shown on plans, as specified in these Special Provisions and as directed the Landscape Architect.

Item No. 50 Fitness Stations to Install

This item shall consist of furnishing and installing *three (3)* Fitness Stations each on stabilized decomposed granite in conformance with these Special Provisions and the manufacturer's specifications and details.

A. Fitness Station shall be Greenfields Equipment as follows, or approved equal:

Fitness Area #1:
#GR2005-1-23 (2) Person Air Walker, Quantity (1)
#GR2005-1-48W Accessible Lat Pull Down, Quantity (1)
Fitness Area #2:
#GR2005-1-14 (2) Person Dip Station, Quantity (1)
#GR2005-1-48A-W Accessible Chest Press, Quantity (1)
Fitness Area #3:
#GR2005-1-12 Weight Lift, Quantity (1)
#GR2004-1-33 Multi-Level Bars, Quantity (1)

B. Distributed By: All About Play, (916) 207-1555. Contact, Kristin Petty.

C. Concrete Footings shall be installed as specified by the manufacturer and shall be Type II Class "D" Portland cement Concrete, conforming to Section 10 of the Standard Specifications.

D. **ALL Bolts** shall be installed as specified by the manufacturer and shall be provided by the Contractor. All exposed bolts shall be cut to 3 exposed threads and all anchor bolts/ nuts shall be tack welded and all remaining exposed bolts/ nuts shall be tightened and secured with Loctite Adhesive, red 271 for a permanent installation.

Payment shall be made at the lump sum price bid and shall include full compensation for furnishing all labor, materials, tools, equipment and incidentals and for doing all work involved in completing Fitness Stations to Install as shown on plans, as specified in these Special Provisions and as directed by the Landscape Architect.

Item No. 51 Picnic Structure to Install

This item shall consist of furnishing and installing a metal shade structure as shown on the plans and in conformance with these Special Provisions and the manufacturer's specifications. The Contractor shall be required to obtain a City Building Permit prior to installation.

A. Shade Structure shall be per Plans or approved equal, and installed per the manufacturer's instruction. Manufacturer, model number and colors as indicated on plans.

B. Building Permit- The City's, Department of Parks and Recreation obtained a Building Permit from Development Services for the shade structure. All the engineered drawing & calculations and permit fees have been paid for on this structure by the City. The contractor will be responsible for coordinating all required building inspections with the

City Building Dept. and providing a final inspection and signoff by the City Building inspector to the project manager before final acceptance.

C. Shade Structure Inspection The Contractor shall provide documentation from a representative of the manufacturer that the shade canopy has been installed per manufacturer's specifications. The Contractor is responsible for any modifications to comply with manufacture's specifications. Upon completion of the installation, manufacturer's representative shall provide documentation stating that the shade structure is installed per manufacturer's specifications. Documentation shall be provided to the project manager prior to final acceptance.

D. Concrete Footings shall be Portland Cement Concrete Type II Class "D" as specified in Section 10 and installed in conformance with Section 20 of the Standard Specifications and the manufacturer's specifications.

E. All Beams shall be structural steel tube sized according to engineer. Color shall be as indicated on plans.

F. Steel Columns shall be structural steel tube sized according to engineering. Color shall be as indicated on plans.

G. All Bolts shall be supplied as specified by the manufacturer and hidden at all connections.

H. Roof shall be 24 gauge multi-ribbed metal panels. Roof color shall be as indicated on plans.

Payment shall be made at the lump sum price bid, and shall include full compensation for furnishing all labor, materials, tools, equipment and incidentals and for doing all work involved in Picnic Structure to Install as shown on the plans, as specified in these Special Provisions and as directed by the Landscape Architect.

Item No. 52 Play Area Wood Fiber to Install

This item shall consist of furnishing and installing **Wood Fiber to a compacted twelve inches (12") minimum finished depth at time of final acceptance by the City** and Geo-textile Fabric in the play area as shown on the plans in conformance with these Special Provisions and the manufacturer's specifications.

A. Wood Fiber shall be Sun-Up Playground Fiber, or approved equal. Wood fiber shall be 100% virgin wood fiber comprised of new Incense Cedar. Wood fiber shall have blunt ends, and shall be void of mixed woods, recycled wood, nails, staples, bark, leaves, dirt, twigs or splinters. Wood Fiber shall be non-toxic with no chemicals or additives, and shall be wheelchair accessible. Wood fiber fall material shall meet CPSC & ASTM Standards for Public Playgrounds.

B. Product Certifications - The Wood Fiber system shall be certified as meeting the U.S. Consumer Product Safety Commission's technical guidelines for playground surfacing as follows: When tested in accordance with suggested test method in Paragraph 1, 2,

and 3, a surface should not impact a peak acceleration in excess of 200 g's to an instrumented ANSI head form dropped on a surface from the maximum estimated fall height. Copies of the testing procedures of the Wood Fiber system and results performed by an independent testing source, which demonstrates compliance with the C.P.S.C. guidelines, shall be provided. The Contractor shall provide the City with a Certificate of Insurance for product liability with the limit of liability of not less than $2,000,000 for the wood fiber supplied. The Wood Fiber system shall have a minimum warranty of one (1) year from date of installation against decay and biochemical degradation calling for replacement of defective materials during the guarantee period. Wood Fiber shall not be installed until after play equipment is installed.

C. Subgrade for play area shall be free of segregated material and shall have a relative compaction of not less than 85%. Subgrade shall be finish graded and sloped to drain to the play area catch basin at a 1-% minimum slope.

D. Weed Control shall conform to Section 35-6 of the Standard Specifications.

E. Geo-textile Fabric shall be placed on top of the prepared sub-grade as shown on the plans, so as not to allow any contact between the Wood Fiber and the sub-grade. Geo-textile Fabric shall be polyester. Fabric shall have a minimum thickness of 3/16". Fabric shall be non-woven, and shall be permeable and not act as a wicking agent.

F. Staples or Fasteners – Geo-textile fabric shall be held in place by the use of staples or fasteners along all corners and seams at approximately 10' O.C. or closer as required to hold Geo-textile fabric in place.

G. Installation of wood fiber shall be within forty-eight (48) hours after play equipment is installed. Wood Fiber shall be placed on top of the Geo-textile Fabric as shown on the plans. The Wood Fiber shall be uniform, level and compacted. Contractor shall thoroughly sprinkle wood fiber after installation and rolled with a partially filled lawn roller in all directions for compaction. The Wood Fiber shall be compacted to a 12" finished depth at the edges of play area at the time of final acceptance by the City. The depth of wood fiber in the center of the play area will be greater.

Payment shall be at the lump sum price bid, and shall include full compensation for furnishing all labor, material, tools, equipment and incidentals and for doing all work involved in completing Play Area Wood Fiber to Place as shown on the plans as specified in these Special Provisions and as directed by the Landscape Architect.

Item No. 53 Tot Lot Play Structure to Install

This item shall consist of furnishing and installing a new Tot Area Play Structure as shown on the plans in conformance with Section 10 of the Standard Specifications, these Special Provisions and the manufacturer's specifications.

A. Play Structure (Tot Area) are by Landscape Structures., or approved equal, see Special Provisions Paragraph J. The structure components shall be installed by the Contractor, as shown on the plans and as specified by the manufacturer. The contractor will be responsible for receiving and storing the play equipment until it is installed.

B. Concrete Footings shall be installed as specified by the manufacturer and shall be Type II Class "D" Portland Cement Concrete, conforming to Section 10 of the Standard Specifications.

C. Manufacturer's Representative shall inspect the play equipment after the installation and provide the City with a letter that states the play equipment is installed in compliance with the manufacturer's specifications and details.

D. Compliance: Contractor shall assemble and install playground equipment in compliance with the written instructions of the manufacturer. The playground equipment shall either be:

1. Assembled and installed by or under the direct supervision of an individual who is authorized by the manufacturer to assemble and install the equipment.

   AND

2. Prior to its first use, the playground equipment shall be inspected by a Certified Playground Safety Inspector who shall certify in writing that the equipment, insofar as it can be seen without disassembling it or digging into the surfacing, is in compliance with ASTM F-1487-98 and CPSC Handbook Publication number 325.

Payment shall be at the lump sum price bid, and shall include full compensation for furnishing all labor, material, tools, equipment and incidentals and for doing all work involved in Tot Lot Play Structure to Install as shown on the plans, as specified in these Special Provisions and as directed by the Landscape Architect.

Item No. 54 Adventure Area Play Structure to Install

This item shall consist of furnishing and installing a new Adventure Area Play Structure as shown on the plans in conformance with Section 10 of the Standard Specifications, these Special Provisions and the manufacturer's specifications.

A. Play Structure (Adventure Area) are by Landscape Structures., or approved equal, see Special Provisions Paragraph J. The structure components shall be installed by the Contractor, as shown on the plans and as specified by the manufacturer. The contractor will be responsible for receiving and storing the play equipment until it is installed.

B. Concrete Footings shall be installed as specified by the manufacturer and shall be Type II Class "D" Portland Cement Concrete, conforming to Section 10 of the Standard Specifications.

C. Manufacturer's Representative shall inspect the play equipment after the installation and provide the City with a letter that states the play equipment is installed in compliance with the manufacturer's specifications and details.

D. Compliance: Contractor shall assemble and install playground equipment in compliance with the written instructions of the manufacturer. The playground equipment shall either be:

1. Assembled and installed by or under the direct supervision of an individual who is authorized by the manufacturer to assemble and install the equipment.

   AND

2. Prior to its first use, the playground equipment shall be inspected by a Certified Playground Safety Inspector who shall certify in writing that the equipment, insofar as it can be seen without disassembling it or digging into the surfacing, is in compliance with ASTM F-1487-98 and CPSC Handbook Publication number 325.

Payment shall be at the lump sum price bid, and shall include full compensation for furnishing all labor, material, tools, equipment and incidentals and for doing all work involved in Adventure Area Play Structure to Install as shown on the plans, as specified in these Special Provisions and as directed by the Landscape Architect.

Item No. 55 Swings to Install

This item shall consist of furnishing and installing a 3-Bay Arch Swings with full bucket, molded bucket and belt seats as shown on the plans in conformance with these Special Provisions.

A. Swing shall be as shown on the plans, or approved equal, and installed per manufacturer's instructions.

B. Concrete Footing shall be Portland Cement Concrete Class "C" or "D" as specified in Section 10-5 and installed in conformance with Section 20 of the Standard Specifications and the manufacturer's specifications.

C. Manufacturer's Representative shall inspect the play equipment after the installation and provide the City with a letter that states the play equipment is installed in compliance with the manufacturer's specifications and details.

D. Compliance: Contractor shall assemble and install playground equipment in compliance with the written instructions of the manufacturer. The playground equipment shall either be:

   1. Assembled and installed by or under the direct supervision of an individual who is authorized by the manufacturer to assemble and install the equipment.

      AND

   2. Prior to its first use, the playground equipment shall be inspected by a Certified Playground Safety Inspector who shall certify in writing that the equipment, insofar as it can be seen without disassembling it or digging into the surfacing, is in compliance with ASTM F-1487-98 and CPSC Handbook Publication number 325.

Payment shall be made at the lump sum price bid and shall include full compensation for furnishing all labor, materials, tools, equipment and incidentals and for doing all work involved to

install a Swings to Install as shown on the plans, as specified in these Special Provisions and as directed by the Landscape Architect.

Item No. 56 Train Climber to Install

This item shall consist of installing new Train Climber Play Feature as shown on the plans in conformance with Section 10 of the Standard Specifications, these Special Provisions and the manufacturer's specifications.

A. Train Climber is by *Landscape Structures* and has been pre-purchased by the City. The Train Climber shall be installed by the Contractor, as shown on the plans and as specified by the manufacturer. The contractor will be responsible for receiving and storing the play equipment until it is installed.

B. Concrete Footings shall be installed as specified by the manufacturer and shall be Type II Class "D" Portland Cement Concrete, conforming to Section 10 of the Standard Specifications.

C. Manufacturer's Representative shall inspect the play equipment after the installation and provide the City with a letter that states the play feature is installed in compliance with the manufacturer's specifications and details.

D. Compliance: Contractor shall assemble and install play feature in compliance with the written instructions of the manufacturer. The play feature shall either be:

1. Assembled and installed by or under the direct supervision of an individual who is authorized by the manufacturer to assemble and install the equipment.

   AND

2. Prior to its first use, the playground equipment shall be inspected by a Certified Playground Safety Inspector who shall certify in writing that the equipment, insofar as it can be seen without disassembling it or digging into the surfacing, is in compliance with ASTM F-1487-98 and CPSC Handbook Publication number 325.

Payment shall be at the lump sum price bid, and shall include full compensation for furnishing all labor, material, tools, equipment and incidentals and for doing all work involved in Train Climber to Install as shown on the plans, as specified in these Special Provisions and as directed by the Landscape Architect.

Item No. 56 Trolley Climber to Install

This item shall consist of installing new Trolly Climber Play Feature as shown on the plans in conformance with Section 10 of the Standard Specifications, these Special Provisions and the manufacturer's specifications.

A. Trolly Climber is by *Landscape Structures* and has been pre-purchased by the City. The Train Climber shall be installed by the Contractor, as shown on the plans and as

specified by the manufacturer. The contractor will be responsible for receiving and storing the play equipment until it is installed.

B. Concrete Footings shall be installed as specified by the manufacturer and shall be Type II Class "D" Portland Cement Concrete, conforming to Section 10 of the Standard Specifications.

C. Manufacturer's Representative shall inspect the play equipment after the installation and provide the City with a letter that states the play feature is installed in compliance with the manufacturer's specifications and details.

D. Compliance: Contractor shall assemble and install play feature in compliance with the written instructions of the manufacturer. The play feature shall either be:

1. Assembled and installed by or under the direct supervision of an individual who is authorized by the manufacturer to assemble and install the equipment.

   AND

2. Prior to its first use, the playground equipment shall be inspected by a Certified Playground Safety Inspector who shall certify in writing that the equipment, insofar as it can be seen without disassembling it or digging into the surfacing, is in compliance with ASTM F-1487-98 and CPSC Handbook Publication number 325.

Payment shall be at the lump sum price bid, and shall include full compensation for furnishing all labor, material, tools, equipment and incidentals and for doing all work involved in Trolley Climber to Install as shown on the plans, as specified in these Special Provisions and as directed by the Landscape Architect.

Item No. 57 Precast Independent Play Items to Install

This item shall consist of installing new Precast Independent Play Items as shown on the plans in conformance with Section 10 of the Standard Specifications, these Special Provisions and the manufacturer's specifications.

A. Precast Independent Play Items are by Cemroc. The Precast Items shall be as shown on the plans and shall be composed of such material, constructed and installed as specified by the manufacturer. The Contractor will be responsible for receiving and storing the Precast Items until it is installed.

1. Manufacturer to provide repair kit with paint, details, specifications and all necessary tools. (Cemrock Representative: Bridget Muck of Miracle Play Group, (916) 317-0545, email: bridget@miracleplaygroup.com)

B. Concrete Footings shall be installed as specified by the manufacturer and shall be Type II Class "D" Portland Cement Concrete, conforming to Section 10 of the Standard Specifications.

C. Manufacturer's Representative shall inspect the Precast Items after the installation and provide the City with a letter that states the equipment is installed in compliance with the manufacturer's specifications and details.

D. Compliance: Contractor shall install equipment in compliance with the written instructions of the manufacturer. The equipment shall either be:

1. Assembled and installed by or under the direct supervision of an individual who is authorized by the manufacturer to assemble and install the equipment.

   AND

2. Prior to its first use, the playground equipment shall be inspected by a Certified Playground Safety Inspector who shall certify in writing that the equipment, insofar as it can be seen without disassembling it or digging into the surfacing, is in compliance with ASTM F-1487-98 and CPSC Handbook Publication number 325.

Payment shall be at the lump sum price bid, and shall include full compensation for furnishing all labor, material, tools, equipment and incidentals and for doing all work involved in Precast Independent Play Items to Install as shown on the plans, as specified in these Special Provisions and as directed by the Landscape Architect.

Item No. 58 Rubber Mat Under Swings to Install

This item shall consist of furnishing and installing a Rubber Mat under the belt swings as shown on the plans and as specified by the manufacturer.

A. Rubber Mat shall be a *Woodcarpet PVC Mat* by *Zeager Bros. Inc.* or approved equal , 42" x 78".
Supplier may be contacted at:

All About Play,	*or*	*Zeager Bros. Inc.*
(916) 923-2180		*1(717) 944-7481*

B. Anchoring shall be done with the use of 3/8 inch airline cable or stainless steel cable connected to ½" diameter x 36 inch recessed steel anchor stakes at anchor points. Mat edges slope below wood fiber material to eliminate tripping hazards. Cable to be supplied by the Contractor. Anchor stakes shall be ordered along with rubber mat.

Payment shall be at the lump sum price bid, and shall include full compensation for furnishing all labor, material, tools, equipment and incidentals and for doing all work involved in completing Rubber Mat to Install under Swings as shown on the plans, as specified in these Special Provisions and as directed by the Landscape Architect.

Item No. 59 Mister Area to Construct

This item shall consist of furnishing and installing the Mister Area s shown on the plans in conformance with the Standard Specifications, these Special Provisions and the plans.

A. General

1. Equipment not listed within these Specifications or on Drawings as furnished by the equipment supplier, but required for the complete installation of the water feature mechanical or electrical systems, shall be furnished by the Contractor.

2. Products shown on the Drawings, but not listed in this Section, shall be provided in accordance with information shown on the Drawings and the General Provisions of this part of the Specification.

B. Mister Area Equipment Manufacturer

1. Mister equipment manufacturer shall be: Water Odyssey™ by Fountain People, Inc., or approved equal, P.O. Box 807, 4600 Highway 123, San Marcos, TX 78667. Local representative, All About Play, telephone (916)923-2180.

C. Mister Area Equipment Manufacturer's Responsibility

1. Aquatic playground materials and component parts shall be guaranteed to be free from defects of materials and workmanship, for a period two years from date of shipment. Additional warranties shall include;

   a. Coating system shall be warranted for a period of two years against peeling or fading under normal environmental conditions.

   b. Stainless steel pipe and anchor bases shall be guaranteed against structural failure for a period of twenty-five years under normal usage.

D. Mister Play Equipment shall be as shown on the plans, or approved equal and installed per manufacturer's instructions.

E. Mister Area Activation/Drain shall be as shown on the plans, or approved equal and installed per manufacturer's instructions.

F. Mister Area Drain shall be per plans, or approved equal and installed per manufacturer's instructions, and shall be formed polyethylene with a 4" slip connection outlet, strainer of molded polyurethane, and a grate of heavy-duty FRP with a skid resistant surface urethane coating secured with tamper-resistant 18/8 stainless steel fasteners.

Payment shall be made at the lump sum price bid, and shall include full compensation for furnishing all labor, materials, tools, equipment, and incidentals and for doing all work involved in completing Mister Area to Construct as shown on the plans, as specified in these Special Provisions and as directed by the Landscape Architect.

Item No. 60 Play Area Rubber Surfacing to Place

This item shall consist of furnishing and installing Play Area Rubber Surfacing to depths as requested by manufacturer's recommendations for the various full heights in the play area as shown on the plans in conformance with these Special Provisions and the manufacturer's specifications.

A. Standards

1. All protective rubberized surfacing, shall meet ASTM F-1951 "Specification for Determination of Accessibility of Surface Systems Under and Around Playground Equipment".

B. Submittals

1. Prior to the purchase of the protective rubberized surfacing and within 10 days after award of contract, Contractor shall submit the following items to Landscape Architect for review and approval. No materials for this section shall be purchased until such approval is granted. Incomplete submittals shall be returned without review.

2. Protective surfacing, poured-in-place rubber submittal items shall include: One pint sample of rubber granules showing specified colors, manufacturer's test data identifying the critical height of material per specified base and wear course depths, and certification of compliance with ASTM F-1951 "Specification for Determination of Accessibility of Surface Systems Under and Around Playground Equipment" and ASTM F-1292, "specification for impact Attenuation of Surface Systems Under and Around Playground Equipment", current version.

C. Products

1. Poured-in-Place Rubber shall be Tot Turf or approved equal. Tot Turf is manufactured by Robertson Industries, Inc. available from Husbands and Associates, Inc., Post Office Box 1152, Pleasanton, CA 94566, (925) 426-5001.

2. Poured-in-place rubber colors shall be as shown on the plans.

3. Binder shall be aliphatic (U.V. stable).

4. Play Area Surfacing shall be installed in accordance with details as shown on the plans.

D. Layout prior to commencing installation, Contractor shall stake layout of protective rubberized surfacing and request an on-site review for approval by the Landscape Architect. Contractor is responsible for adjusting the layout as required by the Landscape Architect.

Payment shall be at the lump sum price bid, and shall include full compensation for furnishing all labor, material, tools, equipment and incidentals and for doing all work involved in completing Play Area Rubber Surfacing to Place as shown on the plans as specified in these Special Provisions and as directed by the Landscape Architect.

Item No. 61 Basketball Goals to Install

This item shall consist of furnishing and installing three (3) sets of Basketball Posts, Backboards, Goals and Nets as shown on the plans in conformance with these Special Provisions and the manufacturer's specifications.

A. Basketball Posts shall be by True Bounce or approved equal. Backboard Poles are 5" x 5" x 3/16" square steel poles with a four foot extension model #PA554. Backboard shall be clear 42' x 72" x 1/2" model XL7042, with 72" backboard pad model # BP072. Goals are heavy duty breakaway goals model # RB1000. Nets are nylon, model #BN 141. Posts shall be powder-coated, and the color shall be Black. Install according to manufacturer's specifications.
Distributed by: True Bounce, Contact Christine Winters (508) 999-3020, fax (877) 841-3715.

B. Concrete Footings shall be installed as specified by the manufacturer and shall be Type II Class "D" Portland Cement Concrete, conforming to Paragraph 10 of the Standard Specifications.

Payment shall be made at the lump sum price bid, and shall include full compensation for furnishing all labor, materials, tools, equipment and incidentals and for doing all work involved in completing Basketball Goals to Install as shown on plans, as specified in these Special Provisions and as directed the Inspector.

Item No. 62 Drop Shot Goals to Install

This item shall consist of furnishing and installing Drop Shot Goals as shown on the plans in conformance with these Special Provisions and the manufacturer's specifications.

A. Drop Shot Goals shall be per Plans, or approved equal, and installed per the manufacturer's instructions.

B. Concrete Footings shall be installed as specified by the manufacturer and shall be Class "A" or "B" Portland Cement Concrete, conforming to Paragraph 10-5 of the Standard Specifications.

Payment shall be made at the lump sum bid, and shall include full compensation for furnishing all labor, materials, tools, equipment and incidentals and for doing all work involved in completing Drop Shot Goals to Install as shown on plans, as specified in these Special Provisions and as directed the Landscape Architect.

Item No. 63 Tennis Court Net and Posts to Install

This item shall consist of furnishing and installing Tennis Court Net and Posts as specified and in conformance with these Special Provisions.

A. Tennis Court Post shall consist of two (2) new sets of post 3" square, heavy gauge steel, coated with baked on Vinyl finish on exterior and interior of post. The contractor shall request the Vinyl finish color shall be *black*. The post feature internal all brass net tightening gears, a pulley, and external handle. The Tennis Court Post, Model #2201-20 shall be by Patterson Williams Athletics or approved equal.

B. Concrete Footing shall be Portland Cement Concrete Type II Class "D", conforming to Section 10 of the Standard Specifications. Footing Diameters shall be consistent with

exist concrete footings for Tennis Court Post and Center Tie-Down Ground Sleeve shall be installed according to manufactures specifications.

C. Tennis Court Hardware shall be by Patterson Williams Athletics or approved equal and shall consist of the following. Center Tie-Down Ground Sleeve Model # 8371-20 and installed with a concrete footing. Net Tie-Down Strap Model # 8371-30.

D. Tennis Court Premium Nets shall be by Patterson Williams Athletics or approved equal. Tennis Court Nets Model # 8352 (42' X 3-½').

Distributed by: Patterson Williams Athletic Company
1-800-687-5768, FAX (520) 445-8185
Or by:
David F. O'Keefe Company
Phone: (925) 283-4404, Fax: (925) 283-4494

Payment shall be made at the lump sum price bid and shall include full compensation for furnishing all labor, materials, tools, equipment, and incidentals and for doing all work involved in installing Tennis Court Net and Posts to Install, as specified in these Special Provisions and as directed by the Inspector.

Item No. 64 Skate Park to Construct

This item shall consist of constructing Skate Park Improvements as shown on the plans in conformance with these Special Provisions and the manufacturer's specifications.

A. Skate Park Precast and Cast-in-Place Elements and Flatwork shall be per plan, manufacturer and installed by Spohn Ranch, Contact Aaron Spohn (626) 330-5803, or approved equal. All skate park elements and flatwork shall be installed by the manufacturer.

B. Pre-Cast Concrete:

1. Specialty Skate Park Construction: All work contained in this Section is specialty skate park construction. Manufacturers and installers must meet the minimum experience requirements contained in the quality assurance section.

2. General Conditions: Requirements of the Contract Documents, including but not limited to, the General, Special, and Technical Provisions, apply to work in this Section as if restated completely herein.

3. Scope of Work: Furnish materials, labor, transportation, services, and equipment necessary to install all Pre-Cast Concrete Skate Elements related to the skate park as indicated on the Drawings complete as shown and as specified herein.

4. References: Comply with the applicable reference specifications as specified in the GENERAL PROVISIONS and in accordance with applicable laws, codes and regulations required by City. Comply with the current provisions of the following Codes and Standards:

a. Annual Book of ASTM Standards, ASTM C 33 – Standard Specification for Concrete Aggregates, Vol. 04.02, American Society for Testing and Materials, Conshohocken, Pennsylvania 1996.

5. Submittals:

a. Manufacturer's Data: Current printed specifications with application and installation instruction for proprietary materials.

b. Shop Drawings: Submit shop drawings of **all** pre-cast concrete skate elements showing detail sections and profile for all precast items. Details shall show all reinforcing and special hardware required for fastening. Evidence of actual manufacture pursuant to drawings is required. Additionally each shop drawing should notate how many individual sections each feature is comprised of.

c. Specified Models: Equipment model numbers or catalog numbers are listed in the specifications to identify a standard of quality required for this project.

d. Contractors seeking to use alternate equipment, materials, or installers other than Spohn Ranch Skateparks must obtain the Landscape Architect's pre-approval. Any product that is not pre-approved will not be considered.

e. The Landscape Architect must receive, at least TEN (10) calendar-days prior to bid opening, all documents and other submittals required to establish equality of a proposed substitute. Any submissions for approval that do not allow for a 10 day review period will not be accepted.

f. Landscape Architect shall approve, disapprove, or require additional information for each request. Any approved substitutes shall be identified in an addendum.

g. Any alternate products being submitted for equivalency shall disclose all instances of any prior municipal or Landscape Architect's rejection of the same or a similar product for "as equal" status to the product specified for this project. Failure to disclose a prior rejection is grounds for denial of any request to approve an alternate product.

h. Landscape Architect shall have absolute discretion to determine whether any submitted product is an equal. The Landscape Architect has the authority to accept or reject submissions for any reason including prior experience or knowledge of a specific product or firm.

i. Requirements for alternate equipment pre-bid submittals:
   i. Must include a signed and completed PRECAST CONCRETE QUALIFICATION – MANUFACTURER AND INSTALLER form (see attached form). Any forms submitted that are incomplete will not be considered for equivalency.
   ii. Must include installation photos from a minimum of TEN (10) listed Project References demonstrating that the proposed product is a monolithic concrete-system that does not require site-installed walls, metal support legs, or any kind of hardware. Any pre-bid submittals that are not

accompanied with the 10 requested pictures will not be considered for equivalency.

iii. Product Warranty

iv. All submittals must be sent in by the Prime Contractor (legal entity of Proposer) bidding the project.

j. Pre-cast concrete equipment pre-submittals shall include the cost of all changes in the structure, mechanical, electrical work, and other appurtenances, including engineering costs from redesign, for the accommodation of such equipment, as determined by the skatepark architect, at the expense of the Contractor.

k. The pre-bid submittals shall list any and all deviations from items specified, and the advantages to be derived if the deviation is approved. If no deviations are noted, it will be assumed that no such deviations exist, and the final submittals will allow no deviations.

6. Quality Assurance:

a. Regulatory Requirements: Comply with applicable laws, codes, and regulations required by authorities having jurisdiction over work.

b. City Expectation: The supply and install of pre-cast concrete skate elements is specialized and requires highly qualified firms with specific experience and know-how in the manufacturing and installation of pre-cast concrete skate elements.

c. Pre Cast Experience – Manufacturer and Installer: Contractor shall submit with their bid proof of prior successful experience (Completed PRECAST CONCRETE QUALIFICATION – MANUFACTURER AND INSTALLER form) for either themselves or a subcontractor in manufacturing and installing monolithic pre-cast concrete skate elements for similar skate parks as specified.

d. Required Installer Experience:

i. The precast concrete installer to perform the installation work shall be **factory trained / certified** (supervised installation is prohibited for this project) and have a minimum of **five (5) years experience** installing precast concrete skatepark equipment as specified for this project. Precast concrete installer must have completed **fifteen (15) public pre-cast concrete skate park facilities** with a minimum size of 6,000 square feet (concrete surface only) within the prior 5 years from the bid due-date. Qualifying parks must currently be in good operating condition as determined by the Landscape Architect. Qualifying parks must have at least 90% of the precast skate elements be monolithic, non-approach plate, pre-cast concrete skate elements that do not require site installed enclosures, metal support legs, or hardware.

ii. Any installer who does not meet the minimum experience criteria as set forth above and reflected in the "PRECAST CONCRETE QUALIFICATION – MANUFACTURER AND INSTALLER form" will not be considered for this project.

e. Required Manufacturer Experience:

i. Manufacturer of all precast concrete elements must maintain the capacity and facilities to produce the quantity and quality of goods specified without any delay to the progress of the work. A "Qualifying Facility" must have been in operation and producing pre-cast concrete skate elements at that same location for **FIVE (5) years**. A "Qualifying Facility" must have been in continuous operation producing pre-cast concrete products at the same location for the same length as the specified warranty period (**fifteen years**).

ii. Manufacturer must provide references for **fifteen (15) precast concrete skateparks** manufactured at this facility in the last **five (5) years** that are a minimum of 6,000 square feet (concrete surface only, landscaping does not count). Qualifying parks must have at least 90% of the precast skate elements be monolithic, non-approach plate, pre-cast concrete skate elements that do not require site installed enclosures, metal support legs, or hardware. All projects used as references must currently be in good operating condition as determined by the Landscape Architect.

iii. Any manufacturer who does not meet the minimum experience criteria as set forth above and reflected in the "PRECAST CONCRETE QUALIFICATION – MANUFACTURER AND INSTALLER form" will not be considered for this project.

7. Delivery, Storage and Handling: Store materials in protected locations and protect from damage.

8. Site Conditions:

   a. Coordinate schedules of concrete placement to allow adequate time for installation of other related work.

   b. Coordinate earthwork and soils report requirements with placement requirements.

   c. Coordinate with form-work and finishes sections to provide finish floor levelness and flatness as specified herein. Slope to drains at grades and percent slope shown on contract documents.

   d. Ensure that irrigation sleeves, electrical conduit, drainage lines and other utility elements are accommodated and as-built located prior to placing concrete.

9. Warranty:

   a. General Description: In addition to manufacturer's warranties, warrant work for a period of one year from the Date of Final Completion against defects in materials and workmanship.

   b. Additional Items Covered: Warranty shall also cover repair of damage to other materials and workmanship resulting from defects in materials and workmanship.

c. Exceptions: Contractor shall not be held responsible for failures due to ordinary wear, neglect by City, vandalism, or other causes beyond the Contractor's control.

d. Manufacturer's Warranty: Bidder must submit a copy of the Pre-Cast Skate Element Manufacturer's Warranty. At a minimum, the warranty must provide 15 years of warranty coverage.

10. Pre-Cast Concrete Skate Park Equipment (General Requirements):

a. All numbered precast concrete components in the bid (as shown in the drawings) must be shipped and arrive on-site as fully integrated or "monolithic" pieces requiring no further assembly. Contractor must submit proof that the applicable manufacturing processes will produce elements that meet this specification.

b. All skate park components shall be manufactured from high quality, steam cured, Pre-Cast concrete.

c. Finished Pre-Cast concrete shall be free from honeycomb, cracks, defects in workmanship, and be of the highest quality.

d. Poured on site elements or elements formed using shotcrete will not be acceptable for features specified as precast.

e. Precast concrete components shall be reinforced with steel rebar, synthetic fiber, welded wire mesh, and meet the specifications listed below.

f. All coping and edge protection shall be stainless steel.

g. All precast equipment must be self-retaining and have factory integrated sides and backs without the use of hardware or metal support legs.

h. Precast equipment requiring site installation of retaining walls will not be acceptable.

i. Any products that do not carry the thickness of the concrete throughout the entire piece and use a channel or waffle system with varying thicknesses will not be considered for this project. The structural reinforcement does not receive the proper coverage and the product is weak and not suited for a public facility.

j. Any system that requires hardware, metal support legs, or turnbuckles will not be accepted.

k. All Pre-Cast Concrete Skate Park Equipment components shall conform to ASTM C 33, "Standard Specification for Concrete Aggregates" and shall meet the following requirements:

11. Pre-Cast Concrete Skate Elements Material Specifications:

a. Concrete:
   i. Type I Portland Cement
   ii. Max. ¾" rock aggregate (foam pellets are not acceptable)

iii. Mechanically vibrated up-side-down in precise concrete mold (self-settling concrete is not acceptable)
iv. Pre-cast indoors off-site at least two weeks prior to installation
v. Cured in temperature- and humidity- controlled environment
vi. Min. 6000 PSI, Max 7000 PSI compressive strength @ 28 days (PSI above 7500 is not acceptable)
vii. Slump: 2-3"
viii. Air Entrainment: 3-5%

b. Reinforcement:
   i. Reinforcing steel shall be new billet deformed bars and welded wire steel mesh and shall conform to ASTM standard A615 and A185 respectively. Minimum cover for all reinforcing shall be 1".
   ii. No. 4 rebar steel reinforcing @ 16" o.c. grid steel reinforcing
   iii. ¼" welded wire mesh (WWM) steel reinforcing @ 6" o.c. grid
   iv. Synthetic Macro Fiber reinforcement meeting ASTM C1116

c. Finish:
   i. All pre-cast elements must transition to the slab without the use of transition plates
   ii. Riding surfaces hand-finished smooth after concrete sealer applied

d. Joints:
   i. Hand finished with cementitious grout or caulk as needed.

e. Steel Components:
   i. Coping: grade 304 stainless steel pipe, 2 3/8" schedule 40, shall be anchored to concrete ramp at 12" on center with steel studs.

   ii. Edge protection: grade 304 stainless steel, 2" x 2" x 1/8" thick plate shall be anchored at 12" on center. The amount of edge protection can be customized to specifications.

   iii. Grind plate/ bmx plate (if applicable): grade 304 stainless steel, 2" x 6" x 1/8" thick plate anchored at 12" on center. All components will be fitted with grind plate as specified. This provides extra protection for BMX applications.

   iv. Coping with grind plate/ coping with BMX plate: grade 304 stainless steel pipe, 2 3/8" schedule 40, shall be anchored into the concrete ramp at 12" on center using steel studs and welded to 6" x 1/8" anchored stainless steel plate. To eliminate dents from hard usage, the coping shall be filled with concrete, fitted with welded end caps and then ground smooth.

   v. Grind rail-rectangular: grade 304 stainless steel tubing, 3" x 2" x 1/8" thickness. All grind rails shall be fitted with welded end caps and then ground smooth. Vertical supports are 2" diameter stainless steel tubing welded to the horizontal rail. These are cast or surface mounted into the concrete foundation during installation unless otherwise specified.

vi. Grind rail-round: grade 304 stainless steel tubing 2" diameter. All grind rails shall be fitted with welded end caps and then ground smooth. Vertical supports are 2" diameter stainless steel tubing welded to the horizontal rail. These are cast or surface mounted into the concrete foundation during installation unless otherwise specified.

vii. Safety rails: black steel round tubing w/ hot dipped galvanized corrosion resistant finish. 2" diameter frame, formed and rounded at corners with ½" diameter solid steel rod evenly spaced at no more than 4" on center. All safety rails shall be cast into the ramp surface as standard. Safety rails shall be a minimum of 46" high and shall prevent passage of a sphere equal to or greater than 4" outside diameter. Safety rails are constructed in a manner that does not allow a skateboard underneath and through the opening between the bottom of the rail and the resting deck. Grade 304 stainless steel tubing is optional.

12. Inspection:

    a. Inspect subgrade, forms, reinforcing steel, pipes, conduits, sleeves, hangers, anchors, inserts, and other work required to be built into concrete and report any discrepancies. Notify City's Representative at least 5 working days in advance of scheduled placement.

    b. Correct unsatisfactory work prior to placing concrete.

    c. Remove rubbish from formwork immediately prior to placing concrete.

13. Repairs and Protection:

    a. Remove and replace pre-cast elements that are broken, damaged, defective, or do not meet the requirements of this Section or conformance with ASTM F 2480 - Standard Guide for In-ground Skate Parks.

    b. Protect pre-cast skate elements from damage until Final Payment. Exclude traffic from pre-cast skate elements for at least 28 days after placement.

14. Comprehensive Strength Test:

    a. Tested in accordance with CSA Standard A23.3-9C.

    b. Cement Type: Type II Normal Portland.

    c. Specified Strength: 6000 PSI (41 MPA)

    d. Cast by : JP Tested By: JP

AGE DATE TESTED	AVERAGE DIAMETER	COMPRESSIVE STRENGTH
7 DAYS 2/9/10	4"	5599.87 PSI
7 DAYS 2/9/10	4"	5508.35 PSI
28 DAYS 3/2/10	4"	6678.14 PSI

28 DAYS 3/2/10	4"	6773.59 PSI

15. Other:

    a. Concrete manufacturing and testing practices are undertaken in accordance with the National Precast Concrete Association (NPCA), Canadian Standards Association, and American Standards & Testing methods (ASTM) standards.

    b. Safety and performance guidelines: comply with all safety and performance requirements and all applicable references as specified in the ASTM F2480 standard guide for in-ground skate parks.

B. Skate Park Cast-In-Place Concrete

1. Design Criteria:

    a. These general structural notes apply unless noted otherwise on structural drawings.

    b. Comply with current local building code.

    c. Comply with aci 301, "specification for structural concrete," unless modified by the requirements of the contract documents.

    d. Testing services: coordinate the following testing with the City selected testing agency (if required by the project specifications):
        i. Material evaluations tests for concrete mix, aggregate base, subgrade, and structural fill.
        ii. Inspection of structural fill placement and compaction.
        iii. Inspection of final subgrade.
        iv. Base material compaction test for every 1000 s.f. of concrete flatwork in skatepark area to ensure 95% compaction in accordance with civil engineering specifications and testing agency recommendations.

2. Shop Drawings:

    a. The structural shop drawing review is intended to help the engineer verify their design concept. This review is only for general conformance with the design concept and does not relieve the contractor from compliance with design drawings & specifications, which have a priority over shop drawings. Contractor is responsible for confirmed & correlated dimensions, fabrication processes, means, methods, techniques, safety, and coordination of the work with other trades. It is the contractor's responsibility to check his own shop drawings and those of his subcontractors.

    b. The structural shop drawings shall be checked by contractor prior to submittal. The shop drawings will be returned for resubmittal if a cursory review shows major errors which should have been found by the contractor's checking. All shop drawings shall include plan layouts showing locations of items detailed on the shop drawings. Any changes, substitutions, or deviations from the contract documents shall be clouded on shop drawings. Any of the changes which are not

clouded or flagged by submitting parties, shall not be considered reviewed after engineer's review unless noted accordingly.

c. Any resubmittal of a detail sheet with changed information shall be accompanied by location plan identifying the members involved, and clouding around changed information.

d. Any engineering submitted for review shall be appropriately sealed. Full responsibility of such engineering rests with the person sealing the design.

3. Earthwork:

a. Establish and maintain required lines and grade elevations.

b. Remove upper six inches or more containing roots, grass, and organic material and dispose off the site. Excavate and stockpile. Scarify and compact exposed subgrade for a depth of 12 inches.

c. Provide structural fill as required to meet proposed subgrade elevations in accordance with civil engineering specifications and testing agency recommendations.

d. Bring up fill using stockpiled material and/or approved material with low plasticity in 12-inch thick maximum layers (unless otherwise specified in the soils report or by local practice), compacting each layer to 95 percent of ASTM D-698.

e. Compact subgrade to obtain firm, even subgrade surface. Fill and consolidate depressed areas. Remove uncompactable materials. Replace with clean fill and compact to 95% of the maximum dry density in accordance with ASTM D698 standard proctor method.

f. The earthwork shall be done under supervision of a soils engineer retained by the City (if required by the project), who shall verify above specifications for the support of slab on grade and for the control of soil swelling.

g. The excavation contractor shall remove all swellable soil as directed by the soils engineer.

h. Excavation and compaction of fill shall extend to the building lines.

i. Proceed with concrete only after nonconforming conditions have been corrected, subgrade has been inspected, and formwork and field mock-ups have been reviewed.

j. Remove loose material from compacted sub-base surface immediately before placing concrete.

4. Foundations: There may not be a soils report for this project. City shall retain a soils engineer if so required by the project, to verify excavations for assumed allowable soil bearing, low settlement and swell potential, and to make any additional

recommendations. Retaining wall footings shall bear on firm undisturbed soil at 1'-6" minimum below lowest adjacent natural or finish grade. Allowable soil bearing 2,000 p.s.f. In the presence of site fills, the contractor shall verify these depths to furnish minimum depth of 1'-6" below natural grade and deepen footings where necessary.

5. Forms:

   a. Form materials: plywood, metal, metal-framed plywood, or other approved panel-type materials free from defects and distortion, and to provide full-depth, continuous, straight, smooth exposed surfaces.

   b. Use flexible or curved forms as required to provide vertical and horizontal radii as indicated in the drawings.

   c. Provide 2" nominal thickness, surfaced plank wood forms for straight sections. Use flexible metal, 1" lumber, or plywood forms for radius bends. Do not overlap forms, creating an offset finished edge.

   d. Form-release agent: commercially formulated form-release agent that will not bond with, stain, or adversely affect concrete surfaces and will not impair subsequent treatments of concrete surfaces.

   e. Edge forms and screed construction:
      i. Set, brace, and secure edge forms, bulkheads, and intermediate screed guides for pavement to required lines, grades, and elevations. Install forms to allow continuous progress of work and so forms can remain in place at least 24 hours after concrete placement.
      ii. Clean forms after each use and coat with form release agent to ensure separation from concrete without damage.

6. Reinforcing:

   a. ASTM A-615 grade 40 (minimum) except as follows: A-108: welded anchors, grade 60, see aws spec for welding without preheat.

   b. Joint dowel bars: Plain steel dowels, ASTM A 615/A 615M, grade 40 (minimum). cut bars true to length with ends square and free of burrs.

   c. Slip dowels are acceptable.

   d. Bar supports: Bolsters, chairs, spacers and other devices for spacing, supporting, and fastening reinforcements bars, and dowels in place. Manufacture bar supports according to crsi's "manual of standard practice" from steel wire, plastic, or precast concrete or fiber-reinforced concrete of greater compressive strength than concrete.

   e. All reinforcing bars deformed except #2 bars. latest aci code and detailing manual apply. clear concrete coverages to any reinforcing including ties are as follows:

      i. 3" concrete placed against rough earth.

ii. 2" formed concrete exposed to earth or weather (#6 or larger rebar only).
iii. 1" slabs and joists not exposed to weather.
iv. 1-1/2" all other.

f. Smaller clearances permissible for precast or prestressed.

g. Lap splices in masonry: Shall be 48 diameters.

h. Tension lap splices in concrete: Unless noted otherwise, provide the following: #3, 22"; #4, 29"; #5, 36. Multiply by 1.3 for top bars.

i. Minimum clear cover for spliced reinforcing is greater than one bar diameter, and minimum clear spacing is greater than two bar diameters. Splice bottom bar over supports and top bar at midspan only. Where bars are shown spliced, they may run continuous at contractor's option.

j. Place rebar per crsi manual. Rebar spacings given are maximum on center whether stated as "o.c." or not, and all rebar is continuous whether stated as "cont." or not. Provide bent corner rebar to match and lap with horizontal rebars at corners and intersection of walls, beams, bond beams and footings per aci manual. Dowel all vertical rebar to foundations. securely tie all rebar, including dowels, in location before placing concrete or grout.

k. General: comply with crsi's manual of standard practice for fabricating reinforcement an with recommendations in crsi's "placing reinforcing bars for placing and supporting reinforcement. Clean reinforcement of loose rust and mill scale, earth, ice, or other bond-reducing materials. Arrange, space, and securely tie bars and bar supports to hold reinforcement in position during concrete placement. Maintain minimum cover to reinforcement.

7. <u>Concrete:</u>

a. All concrete shall meet all the requirements of aci 301 with type II cement. Minimum 28 day strength 4,000 psi, except as follows:
   i. Admixtures containing chlorides shall not be used. Concrete shall not be in contact with aluminum.
   ii. Use of admixtures to reduce water content and control shrinkage is ideal. Work with local ready-mix plant to develop proper mix design.
   iii. Concrete shall be placed within 90 minutes of batching and shall not exceed a temperature of 90 degrees Fahrenheit unless pre-approved by the engineer.
   iv. Slump range: 2 to 4 inches.
   v. Small to medium aggregate (3/4" max.).
   vi. 7.5 sack mix, 15% flyash

b. All slab construction shall conform to aci 302.1.

c. Do not install concrete work over saturated, muddy, or frozen subgrade.

d. Do not install concrete when air temperature is below 40 degrees. Use of calcium chloride, salt, or other admixture to prevent concrete from freezing is

prohibited.

e. Protect adjacent work and provide temporary barricades as required for protection of project work and public safety.

f. Mechanically vibrate all concrete when placed, except that slabs on grade and slabs on deck need be vibrated only around embedded items.

g. Concrete cylinders shall be taken and tested per the aci code, when required by the project.

h. All reinforcing, including dowels and anchor bolts, shall be securely tied in location before placing concrete or grout. Dowels will not be allowed to be "stabbed" in.

i. If entire slab cannot be poured in one day, subcontractor must discuss pour options with the skate park designer.

j. Conduits, pipes, and sleeves embedded in concrete shall conform to the requirements of aci 6.3.

8. Concrete Placement:

a. Consolidate concrete by mechanical vibrating equipment supplemented by hand-spading, rodding or tamping. use equipment and procedures to consolidate concrete according to recommendations in aci 309r.

i. Consolidate concrete along face of forms and adjacent to transverse joints with an internal vibrator. Keep vibrator away from joint assemblies, reinforcement, or side forms. Use only square-faced shovels for hand-spreading and consolidation. Consolidate with care to prevent dislocating reinforcement, dowels, and joint devices.

b. Cold weather placement: comply with aci 306.1 and as follows. protect concrete work from physical damage or reduced strength that could be caused by frost, freezing actions, or low temperatures.

i. Do not install concrete when air temperature is below 40 degrees without written authorization from the City. When air temperature has fallen to or is expected to fall below 40 deg f, uniformly heat water and aggregates before mixing to obtain a concrete mixture temperature of not less than 50 deg f and not more than 80 deg f at point of placement.
ii. Do not use frozen materials or materials containing ice or snow.
iii. Do not use calcium chloride, salt, or other materials containing antifreeze agents or chemical accelerators, unless otherwise specified and approved in mix designs.

c. Hot-weather placement: Place concrete according to recommendation in aci 305r and as follows when hot-weather conditions exist:

i. Cool ingredients before mixing to maintain concrete temperature at time of

placement below 90 deg f. Chilled mixing water or chopped ice may be used to control temperature, provided water equivalent of ice is calculated to total amount of mixing water. Using liquid nitrogen to cool concrete is contractor's option.

ii. Cover reinforcement steel with water-soaked burlap so steel temperature will not exceed ambient air temperature immediately before embedding in concrete.

iii. Fog-spray forms, reinforcement steel, and subgrade just before placing concrete. Keep subgrade moisture uniform without standing water, soft spots, or dry areas.

d. Finish: hard trowel until all visible pours are closed. cease trowel before glass forms on surface of slab. do not broom finish.

i. All edge tooling should be 1/4 inch radius or less. 1/8 inch preferred. Chamfered edges on slab / flatwork perimeter preferred to mitigate slab edge breakage.

9. Concrete Protection and Curing:

a. General: Protect freshly placed concrete from premature drying and excessive cold or hot temperatures. Comply with aci 306.1 for cold-weather protection and follow recommendations in aci 305r for hot-weather protection during curing.

b. Evaporation retardant: Apply evaporation retardant to concrete surfaces if hot, dry, or windy conditions cause moisture loss approaching 0.2 lb/sq. ft. x h before and during finishing operations. Apply to exposed surface of concrete according to manufacturer's written instructions.

c. Begin curing after finishing concrete, but not before free water has disappeared from concrete surface.

d. Curing methods: Cure concrete by moisture curing, moisture-retaining-cover curing, curing compound, or a combination of these as follows:

i. Moisture curing: Keep surfaces continuously moist for not less than seven days with the following materials:
- Water.
- Continuous water-fog spray.
- Absorptive cover, water saturated, and kept continuously wet. Cover concrete surfaces and edges with 6 - inch lap over adjacent absorptive covers.

ii. Moisture-retaining-cover curing: Cover concrete surfaces with moisture-retaining cover for curing concrete, placed in widest practicable width, with sides an ends lapped at least 6 inches, and sealed by waterproof tape or adhesive where necessary. Immediately repair any holes or tears during curing period using the same material and waterproof tape.

iii. Curing compound: Apply uniformly in continuous operation by power spray or roller according to manufacturer's written instructions. Recoat areas

subjected to heavy rainfall within three hours after initial application. Maintain continuity of coating and repair damage during curing period.

10. Curing Materials:

    a. Absorptive cover: ASHTO M 182, Class 2, burlap cloth made from jute or kenaf, weighing approximately 9 oz./sq. yd. dry.

    b. Moisture-retaining cover: ASTM C 171, polyethylene film or white burlap-polyethylene sheet.

    c. Water: Potable.

    d. Evaporation retardant: Waterborne, monomolecular film forming, manufactured for application to fresh concrete.

11. Joint Materials:

    a. Expansion and isolation joint filler strips: Expansion joint materials shall be flexible polyethylene closed cell foam or similar and supplied by concrete contractor.

    b. Expansion joint sealant: Sikaflex - 2c ns tg polyurethane elastomeric sealant, or approved equal. Color of caulk should resemble color of concrete (aluminum gray or similar).

    c. Saw cut joint sealant: Sikaflex-1c sl high performance, self-leveling, 1-part polyurethane sealant, or approved equal. Color of caulk should resemble color of concrete (aluminum gray or similar).

    d. Bonding agent: ASTM C 1059, type ii, non-redispersible, acrylic emulsion or styrene butadiene.

12. Joints:

    a. General: Construct construction, isolation, and contraction joints and tool edgings true to line with faces perpendicular to surface plane of concrete. Construct transverse joints at right angles to centerline, unless otherwise indicated.

    b. Key joints: Set construction joints at side and end terminations of pavement and at locations where pavement operations are stopped for more than one-half hour, unless pavement terminates at isolation joints.

        i. Provide pre-formed galvanized steel or plastic keyway-section forms or bulkhead forms with keys, unless otherwise indicated. embed keys at least 1.5 inches into concrete.
        ii. Continue reinforcement across key joints, unless otherwise indicated. Do not continue reinforcement through sides of pavement strips where indicated.
        iii. Provide tie bars at sides of pavement strips where indicated.

iv. Use a bonding agent at locations where fresh concrete is placed against hardened or partially hardened concrete surfaces.

c. Expansion joints: Form expansion joints of specified joint-filler strips abutting drain structures, and other fixed objects, and where indicated.

i. Locate expansion joints as indicated on drawings.
ii. Extend joint fillers full width and depth of joint.
iii. Terminate joint filler to depth indicated on drawings to allow for bond breaker and joint sealant.
iv. Furnish joint fillers in one-piece lengths. where more than one length is required, lace or clip joint-filler sections together.
v. Protect top edge of joint filler during concrete placement with metal, plastic, or other temporary preformed cap. remove protective cap after concrete has been placed on both sides of joint.

d. Install dowel bars and support assemblies at joints where indicated. lubricate or asphalt-coat one-half dowel length to prevent concrete bonding to one side of joint.

e. Control joints: Form weakened-plane joints, sectioning concrete into areas as indicated. Construct control joints for a depth as indicated in the drawings (generally 1/3 of the pavement thickness), as follows:

i. Sawed joints: Form control joints with power saws equipped with shatterproof abrasive or diamond-rimmed blades. Cut 1/8 inch wide joints into concrete when cutting action will not tear, abrade, or otherwise damage surface an before developing random contraction cracks. Early saw cuts are approximately 1 inch deep, regardless of pavement thickness. Refer to control joint guide drawing of plan set if applicable.
ii. If skatepark project design utilizes poured steps, control joints must be cut 3 - 4 feet from the edge of the top step.

f. Post cure detail work (as needed): Grind smooth any inconsistencies in the finish or high spots between pours.

13. <u>Structural Steel:</u>

a. Furnish materials and perform labor required to execute this work as indicated on the drawings, as specified, and as necessary to complete the contract, including, but not limited to bowl steel coping, ledge steel edging, handrails, and grind rails.

b. Using skilled workers, form and fabricate items of conditions. Make provisions to connect with or receive the work of other trades.

c. Use materials of size and thickness shown or, if not shown, of required size and thickness to produce strength and durability in the finished product.

d. Unless otherwise indicated, weld or bolt connections between members. where possible, conceal connections on the finished work. Fit or miter exposed joints to

hairline tolerance or use welded joints. On finished surfaces, grind all welds smooth and flush with base metal.

e. Weld connections which are not to be left as exposed joints, but cannot be shop welded because of shipping size limitations.

f. Cap all exposed tube or pipe ends. use size and thickness of material shown. properly fit and weld cap at joint, grind weld smooth and flush with base metal.

g. Bend pipe or tubing without collapsing or deforming the walls, and so as to produce a smooth uniform curved section and maintain uniform sectional shape.

h. Where items are to be imbedded in concrete or masonry, provide welded-on anchors or lugs as indicated or required.

i. Provide temporary bracing or anchors in formwork for items which are to be built into concrete or similar construction.

j. Fastening to in-place construction: Provide anchoring devices and fasteners where necessary for securing miscellaneous metal fabrications to in-place construction including threaded fasteners for concrete inserts, or other connectors as required.

k. Galvanizing repair paint: Use a high zinc dust content paint for re-galvanizing welds in galvanized steel.

l. All welding shall conform to requirements of aws standards. All welding shall be shielded metal arc welding. Welds in finish work shall be filled out flush, ground and distressed. Welders for structural shall be certified.

m. ASTM A-36 for c, mc, angles, and plates.

n. ASTM A 53 grade b or a-501 for steel pipes.

o. ASTM A -123 standard specification for zinc (hot-dip galvanized) coatings on iron and steel products

p. ASTM A -513 grade b, fy=46 ksi for ts/hss tube steel for sizes up to 5/8" thick.

q. ASTM A -780 standard practice for repair of damaged and uncoated areas of hot-dip galvanized coatings.

r. ASTM F -1554 grade 36, a-307 or a-36 plain anchor bolts.

14. <u>Supplementary Notes:</u>

a. These contract documents and specifications represent the finished structure. They do not indicate the method of construction. The contractor shall provide all measures necessary to protect the structure, workers, and other persons during construction. Such measures shall include, but not be limited to, means and methods, bracing, shoring, forms, scaffolding, guying or other means to avoid excessive stresses and to hold structural elements in place during construction.

Observation visits to the site by the structural engineer or structural observers shall not include inspection of the above items.

b. Options and substitutions (approved by City/skatepark designer/architect) are for contractor's convenience. Contractor shall be responsible for submitting all changes and additional costs necessary and shall coordinate all details with skatepark designer through prime.

c. Any engineering design provided by contractor or others and submitted for review shall be wet signed and stamped by an insured registered structural or civil engineer licensed in the state of which the project is located, if required by city or county.

d. Unless noted otherwise, details on construction drawings are typical as indicated by cuts, references, or titles. all details shown shall be imported into the project at all appropriate locations, whether specifically indicated or not. Typical details may or may not be referenced on the documents, but shall apply at all locations, unless noted otherwise. Where no detail cuts are shown, construction shall conform to similar work shown elsewhere on the project. For bidding purposes, where any shown member or structural element is not sized on the documents, the largest similar member used in the project shall be utilized.

e. All dimensions and elevations shown on construction drawings shall be verified with architectural drawings (if required by the project). Resolve all discrepancies with skatepark designer and prime prior to start of construction. do not scale drawings.

f. Contractor shall establish and verify in field all existing conditions affecting new construction. Contact skatepark designer and prime immediately if existing conditions are not as depicted in drawings.

15. Pavement Tolerances:

a. Contractor must achieve positive drainage for all surfaces within the skatepark area—1/4" drop in 10' using a straight edge. Standing water will not be allowed. (refer to drainage guide drawing in plan set)

16. Repairs and Protection:

a. Remove and replace concrete pavement that is broken, damaged, or defective, or does not meet requirements in this section. The contractor shall fix all cracks and displacements larger than 1/16" up to the project completion.

b. Protect concrete from damage. Exclude traffic from pavement for at least 14 days after placement. When construction traffic is permitted, maintain pavement as clean as possible by removing surface stains and spillage of materials as they occur.

c. Maintain concrete pavement of stains, discoloration, dirt, and other foreign material.

Payment shall be made at the lump sum price bid, and shall include full compensation for furnishing all labor, materials, tools, equipment, and incidentals and for doing all work involved in completing Skate Park to Construct as shown on the plans, as specified in these Special Provisions and as directed by the Landscape Architect.

Item No. 65 Signage to Install

This item shall consist of proving materials and installing Play Area Rules Signs, Mister Area Rules Sign, Basketball Court Sign, ADA Parking Sign, and Tennis Court Sign as shown on the Plans in conformance with these Special Provisions and the City Standard Specifications and Standard Drawing No. T-270.

A. Signs shall be provided by the City, for installation by the Contractor. The top of the steel park sign will be installed flush with the top of the steel post and shall be installed as shown on Standard Drawing T-270, Standard Sign Center mount.

B. Posts shall be standard weight galvanized steel, Schedule 40, 2" diameter size pipe with pipe cap.

C. Mounting Signage on Fencing (play area fence or tennis court fence) where available. All other signs shall be installed on posts.

D. Concrete Footings shall be Portland Cement Concrete Class "D", conforming to Section 10-5 of the Standard Specifications and as shown on Standard Drawing T-270.

E. Stainless Steel Nuts & Bolts shall be vandal resistant bolts with the nuts tack welded on to reduce theft.

Payment shall be made at the lump sum Bid Price, and shall include full compensation for furnishing all labor, materials, tools, equipment and incidentals and for doing all work involved in Signage to Install as shown on the plans, as specified in these Special Provisions and as directed by the Landscape Architect.

Item No. 66 Interpretive Signage to Install

This item shall consist of installing Interpretive Signage as shown on the plans and the detail thereon in conformance with these Special Provisions.

A. Interpretive Sign Panel shall be as supplied by the City.

B. Interpretive Sign Pedestal shall be as indicated on the Plans. Install per manufacturer's instructions.

C. Footings shall be Portland Cement Concrete Class "C" concrete conforming to Section 10-5 of the Standard Specifications.

D. Stainless Steel Nuts & Bolts shall be vandal resistant bolts with the nuts tack welded on to reduce theft.

Payment shall be made at the unit price bid, and shall include full compensation for furnishing all labor, materials, tools, equipment, and incidentals and for doing all work involved in Interpretive Signage to Install as shown on the plans, as specified in these Special Provisions and as directed by the Landscape Architect.

Item No. 67 Automatic Irrigation System to Install

This item shall consist of furnishing and installing, adjusting and modifying an Automatic Irrigation System as shown on the drawings in conformance with the applicable paragraphs of Sections 10 and 36 of the Standard Specifications and these Special Provisions.

A. Electric Control Valves shall conform to Section 36-13 of the Standard Specifications. Electric control valves shall be Hunter brass model IBV, or approved equal, and shall be constructed as specified in Section 10-50 of the Standard Specifications. Lawn and shrub area valves shall be installed at grade.

B. Gate Valves shall be constructed of all brass as specified in Section 10-51 of the Standard Specifications and shall be lead free and shall be manufactured by Nibco, Model number F-619-RW-SON or approved equal and as shown on the plans and shall be installed at the locations as shown on the plans. Plastic control valves are not acceptable. Valves shall be installed at finished grade in a concrete valve box with locking cover.

C. Valve Boxes shall be installed in conformance with Section 10-52 of the Standard Specifications and as shown on the plans.

D. Electrical shall conform to Section 34 of the Standard Specifications.

E. Irrigation Control Wires shall conform to Sections 10-48 and 36-12 of the Standard Specifications. Trench for irrigation control wires through existing lawn shall be twenty-four inches (24") deep. Trenching for irrigation control wires through existing paved areas shall conform to Section 34-9 of the Standard Specifications.

1. Irrigation Control Wires shall be color coded to the use listed below and follow the colors associated with them.
   a. Full Rotor - Red Wire
   b. Part Rotor - Green Wire
   c. Spray Heads - Yellow Wire
   d. Bubblers - Blue Wire
   e. Common Wire - White Wire

F. Quick Coupling Valves shall be by Hunter Model HQ-5RC or approved equal as specified in the plans, or approved equal. Quick coupling valve shall be constructed of brass with a locking yellow thermoplastic rubber cover with "DO NOT DRINK" markings. Quick Coupling valve shall be installed as shown on the plans in conformance with Section 10-53 of the Standard Specifications (the following shall be disregarded in the Standard Specifications "...single slot type with on inch (1") treaded pipe connection and one (1") key connection..." Valve box shall be installed with the top at finished grade. **Four (4) quick coupler keys model HK-55 shall be provided to the City of Sacramento at the completion of the project.**

G. Plastic Irrigation Pipe Fittings shall conform to Section 10-46 of the Standard Specifications with the following addition: All fittings on the upstream of the valve shall be schedule 80 PVC and all of the fittings downstream of the irrigation valve shall be schedule 40 PVC.

H. Main Line Pipe shall conform to Section 10-44 of the Standard Specifications and be amended as follows: Main line shall be schedule 40 solvent weld for lines 2" and smaller and class 315 PVC for lines 2½" and larger shall be PVC rubber ring and gasket. Main line pipes 2" and larger shall have concrete thrust blocking in conformance with Section 27-6 and Standard Drawing No. "W-103" of Section 38 of the Standard Specifications. The contractor shall pressure test the irrigation main line with the inspector present. The pressure test shall consist of the contractor pressurizing the mainline to 150 PSI for two hours with zero pressure loss with either the Inspector or Landscape Architect present.

I. Lateral Line Pipe or pipe on the discharge side of the irrigation control valve shall be Class 200 solvent weld PVC pipe and shall conform to Section 10-44 of the Standard Specifications, except as previously amended.

J. Trench Backfill shall be installed at no more than 6" lift and each lift shall be compacted to 85% relative density in landscaped areas and compacted to 95% within future paving areas. Mainline trenches shall also have 3" of sand below the mainline and 6" of sand above the conduit.

K. PVC Primers and Solvent welded - PVC pipes will require the following primer and solvent glue applications. Primer shall consist of Weld-On P-70 Industrial Grade Primer and the PVC Solvent Cement shall be Weld-On 711 Heavy Bodied Cement, or approved equal. The primer and solvent cement shall be installed per manufactures specifications.

L. Sprinklers shall be installed at the locations shown on the plans, in conformance with Standard Drawing No. L-50 of Section 38 of the Standard Specifications. Sprinklers shall be the type and model as shown on the plans.

M. Ball Valve Assembly shall be installed at the locations shown on the Plans. Ball Valve Assembly shall be constructed of all brass as specified in Section 10-51 of the Standard Specifications and shall be the type and model as shown on the plans. Plastic control valves are not acceptable. Valves shall be installed at finished grade in a concrete valve box with locking cover.

N. Electronic Marker System shall not be required.

O. Irrigation Sleeves – Shall conform to the Standard Specifications 36-8. The minimum diameter of the sleeve shall be at least two times the diameter of the conduit going through the sleeve. The sleeve shall extend a minimum of 1' beyond the edge of the paving.

P. Preconstruction Test of Existing Irrigation System–City and Contractor shall perform a preconstruction irrigation test prior to the start of construction. During the test all existing remote control valves shall be turned on with the irrigation controller (manually operation is not permitted). The following irrigation items shall be marked with flags and marking

paint: valves, quick couplers, working heads marked blue and broken head marker yellow. All existing broken heads shall be repaired by the City unless specified as an item on the project plans or specifications.

Q. Existing Mainline and electrical conduits it's the contractor's responsibility to located the irrigation mainline and electrical conduits with a locator prior to the start of construction. If the City has a 'Record Drawing' plan a copy will be supplied to the contractor but City can't guarantee the accuracy of the 'Record Drawing'.

Payment shall be made at the lump sum price bid and shall include full compensation for furnishing all labor, materials, tools, equipment and incidentals and for doing all work involved in completing the Automatic Irrigation System to Install as shown on the plans, as specified in Section 36-25 of the Standard Specifications, in these Special Provisions and as directed by the Landscape Architect.

Item No. 68 15-Gallon Trees to Install

This item shall consist of furnishing, preparing and planting 15-gallon Trees in conformance with Sections 10 and 35 of the Standard Specifications and as amended by these Special Provisions.

A. Preparing of Planting Areas shall conform to Section 35-5 of the Standard Specifications.

Soil in lawn areas adjacent to paved areas shall be graded so that after settlement, the soil will be one half inch (1/2") below the top of the paving.

B. Weed Control shall conform to Section 35-6 of the Standard Specifications.

C. Trees and Planting Materials shall conform to Section 35-7 of the Standard Specifications, except where noted.

1. Trees quality and size shall comply with current edition of "American Standard for Nursery Stock" as adopted by the American Association of Nurseryman.

2. Plant Schedules shown on the plans are for the Contractor's convenience only. The Contractor shall confirm all quantities and shall plant as required by the Planting Plan when discrepancies exist.

3. Tree Stake shall be pressure-treated lodge pole pine, eight foot (8') by two inch (2") diameter.

4. Nursery Stakes shall be removed at the time of planting. No nursery stake shall be present prior to final acceptance unless other directed by the Landscape Architect.

5. Tree Ties shall conform to Section 35-7, paragraph G with the exception of the ties shall be rubber and attached per planting detail.

6. Mulch shall conform to the applicable paragraphs of Section 35-8. Mulch area shall be a four foot (4') diameter circle from the tree base in turf and shrub areas.

Payment shall be made at the lump sum price bid, and shall include full compensation for furnishing all labor, materials, tools, equipment and incidentals and for doing all work involved in completing the 15-gallon Trees to Install as shown on the plans, as specified in these Special Provisions and as directed by the Landscape Architect.

Item No. 69 24" Box Trees to Install

This item shall consist of furnishing, preparing and planting 24" Box Trees in conformance with Sections 10 and 35 of the Standard Specifications and as amended by these Special Provisions.

A. Preparing of Planting Areas shall conform to Section 35-5 of the Standard Specifications.

   Soil in lawn areas adjacent to paved areas shall be graded so that after settlement, the soil will be one half inch (1/2") below the top of the paving.

B. Weed Control shall conform to Section 35-6 of the Standard Specifications.

C. Trees and Planting Materials shall conform to Section 35-7 of the Standard Specifications, except where noted.

   a. Trees quality and size shall comply with current edition of "American Standard for Nursery Stock" as adopted by the American Association of Nurseryman.

   b. Plant Schedules shown on the plans are for the Contractor's convenience only. The Contractor shall confirm all quantities and shall plant as required by the Planting Plan when discrepancies exist.

   c. Tree Stake shall be pressure-treated lodgepole pine, eight foot (8') by two inch (2") diameter.

   d. Nursery Stakes shall be removed at the time of planting. No nursery stake shall be present prior to final acceptance unless other directed by the Landscape Architect.

   e. Tree Ties shall conform to Section 35-7, paragraph G with the exception of the ties shall be rubber and attached per planting detail.

   f. Mulch shall conform to the applicable paragraphs of Section 35-8. Mulch area shall be a four foot (4') diameter circle from the tree base in turf and shrub areas.

Payment shall be made at the lump sum price bid, and shall include full compensation for furnishing all labor, materials, tools, equipment and incidentals and for doing all work involved in completing the 24" Box Trees to Install as shown on the plans, as specified in these Special Provisions and as directed by the Landscape Architect.

Item No. 70 Shrub and Groundcover Areas to Install

This item shall consist of furnishing, preparing and planting Shrub and Groundcover Areas in conformance with Sections 10 and 35 of the Standard Specifications and as amended by these Special Provisions.

A. Preparing of Planting Areas shall conform to Section 35-5 of the Standard Specifications.

Soil in Shrub and Groundcover areas adjacent to paved areas shall be graded so that after settlement, the soil will be three inches (3") below the top of the adjacent paving or curb.

B. Weed Control shall conform to Section 35-6 of the Standard Specifications.

C. Soil Preparation Materials shall conform to Section 10-39, 10-40, 10-41, 35-8 of the Standard Specifications.

1. Soil Conditioner/Fertilizer Contractor shall submit soil fertility analysis upon completion of rough grading for approval and application of amendments. Soils fertility analysis shall evaluate the following: micronutrient content, macronutrient content, pH level, saturation percentage, soil texture, infiltration rate, conductivity, total dissolved salts, cation exchange capacity, Sulfur or Lime levels, Gypsum levels, Sodium absorption ratio, exchangeable Sodium percentage, organic matter and recommendations based on analytical results. Soil conditioner shall be cultivated into the top twelve inches (12") of the soil and thoroughly watered in. Contractor shall provide proof of soil conditioner application to the Landscape Architect.

D. Planting Materials shall conform to Section 10-43 and 35-8 of the Standard Specifications.

Payment shall be made at the lump sum price bid and shall include full compensation for furnishing all labor, materials, tools, equipment and incidentals and for doing all work involved in completing the Shrub and Groundcover Areas as shown on the plans, as specified in these Special Provisions and as directed by the Landscape Architect.

Item No. 71 – Landscape Weed Fabric to Place

This item shall consist of furnishing and installing landscape weed block fabric under all bark mulch in all planted areas in conformance with the Standard Specifications and as amended by these Special Provisions.

A. Landscape Weed Fabric shall be DeWitt Weed Barrier Landscape Fabric, 3.5 ounce, 12 yr, Color Brown, UV treated, spunbonded fabric or approved equal. Contact DeWitt Company 1-800-888-9669, or dewittcompany.com.

B. Metal Anchor Pins shall be by Dewitt or approved equal. Contact DeWitt Company 1-800-888-9669, or dewittcompany.com.

Payment shall be made at the lump sum price bid and shall include full compensation for furnishing all labor, materials, tools, equipment and incidentals and for doing all work involved in Landscape Weed Fabric to Place as shown on the plans, as specified in these Special Provisions and as directed by the Landscape Architect.

Item No. 72 – Bark Mulch to Install

This item shall consist of furnishing and installing a 3" layer of bark mulch in all planted areas and tree wells in conformance with Sections 10 and 35 of the Standard Specifications and as amended by these Special Provisions.

Mulch shall be evenly spread in all planter areas as specified on the plans. Mulch shall be Medium Walk on Bark, consisting of shredded Douglas fir, Red fir or white fir, fibrous in nature, four inch (4") minimum to four-inch (4") maximum in length, available from Redi-Gro, or approved equal. Contractor shall submit a mulch sample to the Landscape Architect for approval at least forty-eight (48) hours prior to installation.

Mulch shall be at a three-inch (3") finished depth at time of final acceptance by the City, and shall be free of deleterious material.

Payment shall be made at the lump sum price bid and shall include full compensation for furnishing all labor, materials, tools, equipment and incidentals and for doing all work involved in Bark Mulch to Install as shown on the plans, as specified in these Special Provisions and as directed by the Landscape Architect.

Item No. 73 Turf Hydroseed to Install

This item shall consist of furnishing materials, preparing and Turf Hydroseed areas shown on the Plans in conformance with Sections 10 and 35 of the Standard Specifications and as amended by these Special Provisions.

A. Preparing of Planting Areas, Section 35-5 of the Standard Specifications shall be amended as follows: Soil shall be cultivated until the condition of the soil is loose and fine-textured to a depth of four inches (4"). Finish grade of all planting areas shall be reviewed and approved by the Landscape Architect before proceeding with planting. Soil in lawn areas adjacent to curbs or paved areas shall be graded so that after settlement, the soil will be one-half inch (1/2") below the top of curb or paving.

B. Weed Control shall conform to Section 35-6 of the Standard Specifications.

C. Soil Preparation Materials shall conform to Sections 10-39, 10-40, 10-41, 35-8 of the Standard Specifications.

1. Soil Conditioner/Fertilizer Contractor shall submit soil fertility analysis upon completion of rough grading for approval and application of amendments. Soils fertility analysis shall evaluate the following: micronutrient content, macronutrient content, pH level, saturation percentage, soil texture, infiltration rate, conductivity,

total dissolved salts, cation exchange capacity, Sulfur or Lime levels, Gypsum levels, Sodium absorption ratio, exchangeable Sodium percentage, organic matter and recommendations based on analytical results. Soil conditioner shall be cultivated into the top twelve inches (12") of the soil and thoroughly watered in. Contractor shall provide proof of soil conditioner application to the Landscape Architect.

D. Turf Hydroseed shall conform to Section 10-42, and applicable paragraphs of Section 35-10 of the Standard Specifications and these Special Provisions.

1. Seed Mix shall consist of 90% Dwarf fescue mix, 10% Dwarf Kentucky Blue Grass applied at the rate of not less than twelve (12) lbs. of viable seed per 1,000 square feet. Seed mix shall be submitted to the Park Construction Inspector for approval. All seed shall be labeled in accordance with the Calfornia Food and

   a. Agricultural code and shall be delivered to the site in original, unopened containers and shall bear a dated guaranteed analysis.

2. Wood Fiber Mulch shall be applied at the rate of 60 lbs. per 1,000 square feet. Wood Mulch shall be a fibrous cellulose mulch containing no growth or germination inhibiting substances, and shall be manufactured in such a manner that when thoroughly mixed with seed, fertilizer, and water, in the proportions specified, it will form a homogenous slurry, which is capable of being sprayed to form a porous mat. The fibrous mulch in its air-dry state shall contain not more than 10 percent by weight of water.

3. Fungicide shall be applied at the rate of one-third (1/3) lbs. per 1,000 square feet.

4. Binder shall be Am-Tac tackifier or approved equal applied at the rate as recommended by the manufacturer. Binder shall bind the fiber mulch to prevent erosion.

E. Turf Starter Fertilizer shall be applied at the rate of ten (10) lbs. per 1,000 square. Starter fertilizer shall conform to the requirements of the California Food and Agricultural Code.

Payment shall be made at the lump sum price bid and shall include full compensation for furnishing all labor, materials, tools, equipment and incidentals and for doing all work involved in completing the Turf Hydroseed as shown on the plans, as specified in these Special Provisions and as directed by the Landscape Architect.

Item No. 74 Landscape Maintenance (90 days)

This item shall consist of maintaining the landscape planted areas installed in this contract as shown on the plans in conformance with Sections 35-15 through 35-18 of the Standard Specifications and as amended by these Special Provisions.

A. Start of Maintenance Period shall conform to Section 35-15 of the Standard Specifications. As amended by the following: The start of the Maintenance period will not start until SUBSTANTIAL COMPLETION (refer to sections 1-45 and 8-4 of the 2007 City Standard Specifications) of the entire project has been determined by the City landscape architect.

B. Watering shall conform to Section 35-13 of the Standard Specifications and these Special Provisions.

C. Plant Replacement shall conform to Sections 35-14 of the Standard Specifications.

D. Plant Establishment period or Landscape Maintenance Period shall conform to Section 35-16 of the Standard Specifications and be amended as follows: The Landscape Maintenance Period shall be ninety (90) calendar days and shall begin on the date of the Start of Maintenance Period. Plant Establishment and Landscape Maintenance shall continue until final acceptance of the work.

E. Lawn Maintenance shall conform to Section 35-16 of the Standard Specifications. When the lawn reaches three inches (3") in height, the Contractor shall mow it to a height of one and one-half inches (1-1/2"). The lawn shall be mowed thereafter on a weekly basis to a height of one and one-half inches (1-1/2"). Lawn growing around trees, light poles, fences, and other obstacles shall be maintained at a height equal to that of the adjacent lawn areas, or may be chemically controlled with the approval of the Landscape Architect. Catching of lawn clippings shall not be required. Following a minimum of three (3) mowings the Contractor shall be required to treat the lawn with a selective broadleaf and grass weed herbicide that will not harm the lawn. The Contractor shall conform to Section 35-6 of the Standard Specifications for application of herbicides.

1. Lawn Fertilizer (2nd Application): One week prior to the final inspection the Contractor shall apply to all lawn areas a second application of fertilizer with a 16-6-8, N-P-K analysis, at six (6) pounds per 1,000 square feet.

F. Tree & Shrub Maintenance. Trees and Shrubs shall be pruned and shaped as directed by the Landscape Architect. Trees shall be restaked as necessary. Maintain watering basins and shrub and groundcover areas free of weeds.

G. Pre-Final Inspection shall conform to Section 35-17 of the Standard Specifications and be amended as follows: Seven (7) weeks prior to the end of Maintenance Period, the Inspector and the Landscape Architect shall conduct a pre-final inspection. At the pre-final inspection or at any time thereafter, should the Inspector determine that the project meets the requirements of the final acceptance of the work, he may issue final acceptance of the project to the Contractor.

H. Final Inspection shall conform to Section 35-18 of the Standard Specifications. At the time of final acceptance of the work, any square yard of the planted areas shall be ninety percent (90%) weed free and in a neatly mowed condition, as determined by the Inspector.

Payment shall be made at the unit price bid per month, and shall include full compensation for furnishing all labor, materials, tools, equipment and incidentals and for doing all work involved in completing the Landscape Maintenance (90 days) as shown on the plans, as specified in these Special Provisions and as directed by the Landscape Architect.

ADDITIVE ALTERNATE BID ITEMS

Add Alternate Item No. A1 – Tot Area Shade Canopy to Install

This item shall consist of furnishing and installing a Shade Canopy as shown on the plans in conformance with these Special Provisions and the manufacturer's specifications.

A. Shade Canopy shall be a steel frame structure with a polyester fabric canopy, hip roof, 30' x 35' as shown on the plans, manufactured by Polygon and distributed by All About Play, (916) 207-1551, or approved equal.

B. Concrete Footings shall be installed as specified by the manufacturer and shall be Type II Class "D" Portland Cement Concrete, conforming to Paragraph 10-5 of the Standard Specifications.

C. Roof Dimensions: 43'- 3 $^{15}/_{16}$" point to point. Height of canopy shall be 24'- 9 $^{3}/_{4}$" at the roof eave. Slope of roof shall be per plans.

D. All Beams shall be structural steel tube sized according to the manufacturer's structural engineering plans, color shall be per plan.

E. Steel Columns shall be structural steel tube sized according to the manufacturer's structural engineering plans. Color shall be per plan.

F. Fabric shall be a durable synthetic fabric designed for use in tension shade products. Fabric shall provide a minimum of 95% UV protection. Color shall be per plan.

E. All Fasteners shall be as supplied and specified by the manufacturer and hidden at all connections.

F. All structural members shall be powder coated.

G. Column locations shall be staked on site prior to ordering in order to verify that column locations will not interfere with the play equipment fall zones. The Contractor shall provide documentation from a NPSI inspector that the proposed column locations will not interfere with the fall zones. In the event that the dimensions shown on the plan result in an interference with the fall zone, the Contractor shall bring this to the attention of the Landscape Architect and Inspector. Upon completion of the installation, the NPSI inspector shall provide documentation stating that the shade canopy does not interfere with the play equipment fall zones.

H. In the event that the concrete curbing or flatwork is damaged during the installation of the canopy, the contractor shall replace the concrete to its original condition at no additional expense to the City.

Payment shall be made at the lump sum price bid and shall include full compensation for furnishing all labor, materials, tools, equipment and incidentals and for doing all work involved in

completing Tot Area Shade Canopy to Install as shown on the plans, as specified in these Special Provisions and as directed by the Landscape Architect.

Additive Alternate Item No. A2 - Security Cameras and Signs to Install

This item shall consist of furnishing, installing and testing the (2) Security Cameras and Signs on new posts as shown on the plan in conformance with section 34 and 38 of the Standard Specifications and these Special Provisions.

A. Security Camera shall be a FlashCAM-880SX by Q-Star Technology (866)201-4197 qstr@qstartech.com) or approved equal. Contact the manufacturer's representative, Yvett Campos, Phone (510) 575-3607 or e-mail ycampos@qstartech.com for information and pricing.

B. Security Camera shall be installed as indicated on the plans and as specified by the manufacturer.
The camera and post shall be installed at the location indicated on the plans and per the Landscape Architects direction. The security camera shall be programmed by the contractor. Final camera placement, testing and programming shall be done at the site by the contractor with City Staff. The contractor shall not install fixed camera bracket until City Staff verifies all the placement and programming has been set up per the City's field direction. Once all adjustments have been made then the contractor shall install the nut and bolt through the camera bracket and post (per the flash camera detail). The system shall be fully operational prior to the final acceptance.

C. Post shall be a 4" dia. Schedule 40 galvanized steel post as shown on the plans, with a cap. Post shall have an exterior powder coat black finish.

D. Stainless Steel Nuts & Bolts shall be vandal resistant bolts with the nuts tack welded on to reduce theft.

E. Concrete Footings shall be installed as specified by the manufacturer and shall be Type II Class "D" Portland Cement Concrete, conforming to Paragraph 10-5 of the Standard Specifications.

F. Camera Surveillance Sign shall be provided by the City, for installation by the Contractor. The top of the steel park sign will be installed flush with the top of the steel post and shall be installed as shown on Standard Drawing T-270, Standard Sign Center mount.

Payment shall be made at the lump sum bid price per each and shall include full compensation for furnishing all labor, materials, tools, equipment, testing and incidentals and for doing all work involved completing the Security Cameras and Signs to Install as shown on the plans, as specified in these Special Provisions and as directed by the Landscape Architect.

Additive Alternate Item No. 3 - Entry Arch to Install

This item shall consist of furnishing and installing an ornamental metal entry arch (12'-8" wide x 17'-6" tall) as shown on the plans and in conformance with these Special Provisions and the manufacturer's specifications.

A. Entry Arch shall be per Plans or approved equal, and installed per the manufacturer's instruction. Manufacturer, model number and colors as indicated on plans.

B. City Building Permit The City's, Department of Parks and Recreation obtained a Building Permit from Development Services for the Icon structure. All engineered drawing and calculations and permit fees have been paid for on this structure by the City. The Contractor will be responsible for coordinating all building inspections with the City Building Department and providing a final signoff by the City Building Inspector to the project manager before final acceptance.

C. Concrete Footings shall be Portland Cement Concrete Type II Class "D" as specified in Section 10 and installed in conformance with Section 20 of the Standard Specifications and the manufacturer's specifications.

D. Posts shall be structural steel tube sized according to engineer. Color shall be as indicated on plans.

E. Panels shall be structural steel plate sized according to engineering. Color shall be as indicated on plans.

F. All Bolts shall be supplied as specified by the manufacturer and hidden at all connections.

Payment shall be made at the lump sum price bid, and shall include full compensation for furnishing all labor, materials, tools, equipment and incidentals and for doing all work involved in Entry Arch to install as shown on the plans, as specified in these Special Provisions and as directed by the Landscape Architect.

Add Alternate Item No. 4 – Turf Sod to Place

This item shall consist of the added cost to installing Turf Sod in the areas designated on the planting plan for turf hydroseed and in other areas damaged by grading and construction operations in conformance with Sections 10 and 35 of the Standard Specifications and as amended by these Special Provisions. **If this Bid Item is awarded then the contractor shall be paid for both the Turf Hydroseed and the Turf Sod to Place which will equal the total cost to place turf sod.**

A. Areas to Sod - Turf sod shall be placed only in large continuous turf area shown on the Planting Plan sheets 31 and 32 which surrounding the proposed playground, picnic area, water spray area, tennis and basketball courts and skate park. All other turf areas shown on Planting Plan sheets 29 and 30, adjacent to jogging trail, identified as 5' wide areas on plans, and others turf areas damaged by construction operations or removed concrete pads shall be hydroseeded.

B. Preparing of Planting Areas, paid under the bid item for Turf Hydroseeding to Install.

C. Weed Control paid under the bid item for Turf Hydroseeding to Install.

D. Soil Preparation Materials paid under the bid item for Turf Hydroseeding to Install.

E. Turf Sod shall consist of a mix of 90% Dwarf Fescue and 10% Kentucky Bluegrass, and shall conform to Section 10-42, and applicable paragraphs of Section 35-12 of the Standard Specifications and these Special Provisions.

F. Turf Starter Fertilizer paid under the bid item for Turf Hydroseeding to Install.

Payment shall be at the lump sum price bid, and shall include full compensation for furnishing all labor, material, tools, equipment and incidentals and for doing all work involved in completing Turf Sod to Place as shown on the plans, as specified in these Special Provisions and as directed by the Landscape Architect.

ATTACHMENT A

Geotechnical Report

ATTACHMENT B

Storm Water Prevention Pollution Details

ATTACHMENT C

Construction and Demolition Debris Ordinance Overview

CITY OF SACRAMENTO

DEPARTMENT of PARKS and RECREATION
LANDSCAPE ARCHITECTURE SECTION

CONSTRUCTION PLANS FOR:

McCLATCHY PARK RENOVATION

3500 5TH AVE.

PROJECT NUMBER: L19136500

APNS: 013-0251-001-0000

TOTAL DISTURBED AREA: 3.84 ACRES

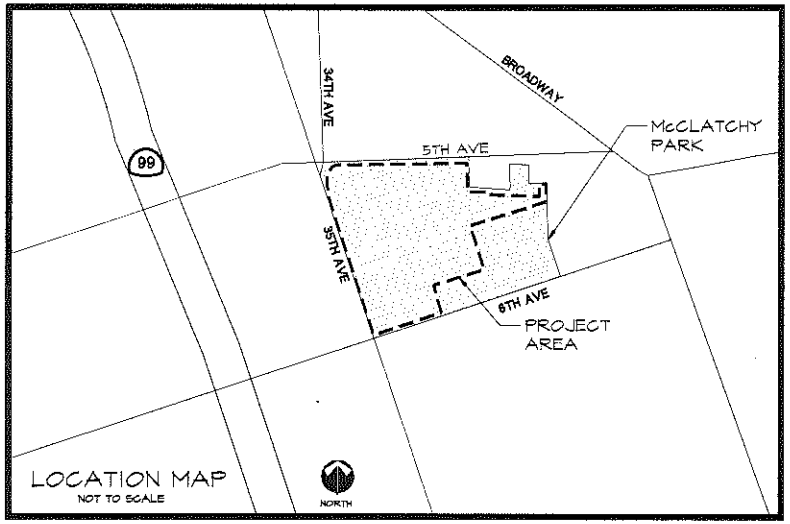

LOCATION MAP
NOT TO SCALE

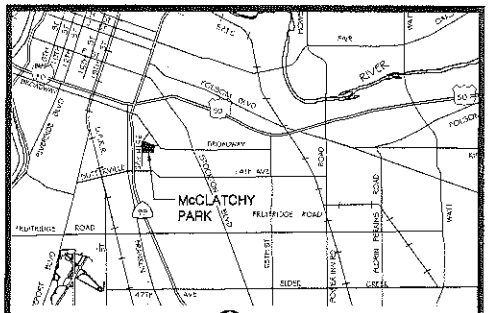

VICINITY MAP
NOT TO SCALE

PREPARED BY:

LANDSCAPE ARCHITECT
CALLANDER ASSOCIATES
LANDSCAPE ARCHITECTURE, INC.
11180 SUN CENTER DRIVE, SUITE 104
RANCHO CORDOVA, CA 95670
PHONE: (916) 631-1312
FAX: (916) 635-9153

CIVIL ENGINEER
MARK THOMAS & COMPANY, INC.
7500 FOLSOM BLVD, SUITE 203
SACRAMENTO, CA 95826
PHONE: (916) 381-9100
FAX: (916) 381-9180

GEOTECHNICAL ENGINEER
WALLACE-KUHL & ASSOCIATES, INC.
3050 INDUSTRIAL BLVD.
WEST SACRAMENTO, CA 95691
PHONE: (916) 372-1434
FAX: (916) 372-2565

ELECTRICAL ENGINEER
ZEIGER ENGINEERS, INC.
330 SECOND STREET, SUITE 2
OAKLAND, CA 94607-4102
PHONE: (510) 452-9391
FAX: (510) 452-0661

STRUCTURAL ENGINEER
BARRISH PELHAM & ASSOCIATES, INC.
3001 E STREET
SACRAMENTO, CA 95816
PHONE: (916) 418-9100
FAX: (916) 418-9101

GENERAL NOTES:

1. COORDINATION OF CONTRACT DOCUMENTS:
   REFER TO SECTION 5-3 COORDINATION OF CONTRACT DOCUMENTS OF THE CITY OF SACRAMENTO STANDARD SPECIFICATIONS FOR PUBLIC CONSTRUCTION DATED JUNE 2007 INCLUDING ALL APPLICABLE ADDENDA AND MEMORANDA.
2. TRAFFIC CONTROL REQUIREMENT:
   REFER TO SECTION 6-10 TRAFFIC CONTROL REQUIREMENTS OF THE STANDARD SPECIFICATIONS FOR REQUIREMENTS.
3. EXISTING FACILITIES:
   REFER TO SECTION 15 EXISTING FACILITIES OF THE STANDARD SPECIFICATIONS FOR REQUIREMENTS.
4. LOCATION AND PROTECTION OF EXISTING UTILITIES:
   REFER TO SECTION 6-14 MAIN AND TRUNKLINE UTILITIES OF THE STANDARD SPECIFICATIONS FOR REQUIREMENTS.
5. PERMANENT SURVEY MONUMENTS:
   REFER TO SECTION 6-5 TRENCH SAFETY PLANS OF THE STANDARD SPECIFICATIONS FOR REQUIREMENTS.
6. HUMAN BURIAL ENCOUNTER:
   IF HUMAN BURIALS ARE ENCOUNTERED, ALL WORK IN THE AREA SHALL STOP IMMEDIATELY AND THE SACRAMENTO COUNTY CORONER'S OFFICE SHALL BE NOTIFIED IMMEDIATELY. IF THE REMAINS ARE DETERMINED TO BE NATIVE AMERICAN IN ORIGIN, BOTH THE NATIVE AMERICAN HERITAGE COMMISSION AND ANY IDENTIFIED DESCENDANTS MUST BE NOTIFIED AND RECOMMENDATIONS FOR TREATMENT SOLICITED, PURSUANT TO: CEQA SECTION 15064.5; HEALTH AND SAFETY CODE SECTION 7050.5; PUBLIC RESOURCES CODE SECTION 5097.94 AND 5097.98.
7. TRENCH SAFETY PLANS:
   REFER TO SECTION 6-8 TRENCH SAFETY PLANS OF THE STANDARD SPECIFICATIONS FOR REQUIREMENTS.
8. PROTECTION OF WORK, PERSONS AND PROPERTY AGAINST DAMAGE:
   REFER TO SECTION 7-7 PROTECTION OF WORK, PERSONS AND PROPERTY AGAINST DAMAGE OF THE STANDARD SPECIFICATIONS FOR REQUIREMENTS.
9. RECORD DRAWINGS:
   REFER TO SECTION 5-8 RECORD DRAWINGS OF THE STANDARD SPECIFICATIONS FOR REQUIREMENTS.
10. APPLICABLE CODES/LAWS:
    REFER TO SECTION 6-1 LAWS TO BE OBSERVED AND SECTION 6-2 CERTAIN LAWS AFFECTING THE WORK OF THE STANDARD SPECIFICATIONS AND THE SPECIAL PROVISIONS FOR REQUIREMENTS.
11. ADDITIONAL GENERAL NOTES:
    SEE SHEET L2 FOR ADDITIONAL GENERAL NOTES

ADD ALTERNATES:

1. TOT AREA SHADE CANOPY
2. TURF FROM SOD

SHEET INDEX

TITLE	SHEET NO.
COVER SHEET	1
GENERAL NOTES & KEY MAP	2
EROSION AND SEDIMENT CONTROL PLAN	3-4
DEMOLITION PLAN	5-9
GRADING AND DRAINAGE PLAN	10-14
LAYOUT PLAN	15-19
ENLARGEMENT PLANS	20-22
IRRIGATION PLAN	23-27
PLANTING PLAN	28-32
CONSTRUCTION DETAILS	33-39
SHADE CANOPY DETAILS (ADD ALTERNATE #1)	40-42
PICNIC SHELTER DETAILS	43-45
ENTRY ARCH DETAILS	46-47
SKATE PARK PLANS AND DETAILS	SK1-SK5
STRUCTURAL FOUNDATION DETAILS	S1
ELECTRICAL PLANS AND DETAILS	E1-E4
UTILITY PLANS AND DETAILS	U1-U3

CITY REPRESENTATIVE:

PROJECT MANAGER:
DENNIS DAY, LANDSCAPE ARCHITECT
CITY OF SACRAMENTO, PARKS PLANNING AND DEVELOPMENT,
LANDSCAPE ARCHITECTURE SECTION
915 I STREET, 3RD FLOOR
SACRAMENTO, CA 95814, DDAY@CITYOFSACRAMENTO.ORG
TELEPHONE: (916) 808-7653 FAX (916) 808 8266

APPROVED BY:

JAMES L. COMBS, DIRECTOR (DATE)
DEPARTMENT OF PARKS AND RECREATION

C. GARY HYDEN, SUPERVISING LANDSCAPE ARCHITECT (DATE)
DEPARTMENT OF PARKS AND RECREATION

SHANNON D. BROWN, PARKS MANAGER (DATE)
DEPARTMENT OF PARKS AND RECREATION

BUILDING DEPARTMENT SUBMITTAL

811 Dig Alert
Flag and/or Delineate Before You Dig. Call Before You Dig.

Callander Associates Landscape Architecture, Inc.
11180 Sun Center Drive, Suite 104
Rancho Cordova, CA 95670
(916) 631-1312
(916) 635-9153

CA PROJECT NO. 12.051

CITY OF SACRAMENTO
PARKS AND RECREATION DEPARTMENT
PARK, PLANNING, DESIGN, & DEVELOPMENT
LANDSCAPE ARCHITECTURE SECTION
915 I STREET, 5TH FLOOR,
SACRAMENTO, CA 95814

McCLATCHY PARK - L19136500

McCLATCHY PARK RENOVATION
COVER SHEET

LANDSCAPE ARCHITECT: BH
DESIGN BY/DRAWN BY: DM/BC
CAD FILE: 12.051
DATE: 1/26/13
SCALE:
CAD SCALE:
P.N.: L19136500
REVISIONS:

SHEET NO. 1 OF 52

GENERAL NOTES

1. DESIGN INTENT. THESE DRAWINGS REPRESENT THE GENERAL DESIGN INTENT TO BE IMPLEMENTED ON THE SITE. CONTRACTOR SHALL BE RESPONSIBLE FOR CONTACTING LANDSCAPE ARCHITECT FOR ANY ADDITIONAL CLARIFICATION OR DETAILS NECESSARY TO ACCOMMODATE SITE CONDITIONS.

2. CONTRACTORS' JOB SITE CONDITIONS. CONTRACTOR AGREES TO ASSUME SOLE AND COMPLETE RESPONSIBILITY FOR SITE CONDITIONS DURING CONSTRUCTION, INCLUDING SAFETY OF ALL PERSONS AND PROPERTY; THAT THIS REQUIREMENT SHALL APPLY CONTINUOUSLY AND NOT BE LIMITED TO NORMAL WORKING HOURS; AND THAT THE CONTRACTOR SHALL DEFEND, INDEMNIFY, AND HOLD THE CITY AND THE LANDSCAPE ARCHITECT HARMLESS FROM ANY AND ALL LIABILITY, REAL OR ALLEGED, IN CONNECTION WITH THE PERFORMANCE OF WORK ON THIS PROJECT, EXCEPTING FOR LIABILITY ARISING FROM THE SOLE NEGLIGENCE OF THE CITY OR THE LANDSCAPE ARCHITECT.

3. COMPOSITE BASE SHEET. THE PROPOSED IMPROVEMENTS SHOWN ON THESE DRAWINGS ARE SUPERIMPOSED ON A BASE SHEET. THIS BASE SHEET IS COMPILED FROM THE TOPOGRAPHIC SURVEY, OTHER ARCHITECTURAL AND/OR ENGINEERING DOCUMENTS, AND OTHER DATA AS MADE AVAILABLE TO THE LANDSCAPE ARCHITECT. THIS BASE SHEET INFORMATION IS SHOWN IN HALF TONE ON THE PLANS. THE LANDSCAPE ARCHITECT SHALL NOT BE HELD LIABLE FOR CHANGES, INACCURACIES, OMISSIONS, OR OTHER ERRORS ON THESE DOCUMENTS. THE COMPOSITE BASE SHEET IS PROVIDED AS AN AID ONLY AND THE CONTRACTOR SHALL BE RESPONSIBLE FOR REVIEWING THESE DOCUMENTS AND INCORPORATING/INTEGRATING ALL CONSTRUCTION AS REQUIRED TO ACCOMMODATE SAME.

THE BASE SHEET SOURCE FOR THESE DRAWINGS IS:
TOPOGRAPHIC/TREE SURVEY OF JAMES McCLATCHY PARK,
PREPARED BY STANTEC CONSULTING, 10/15/08, PH: (916) 569-2500

4. UTILITIES. PRIOR TO CONSTRUCTION, THE CONTRACTOR IS RESPONSIBLE FOR CONTACTING THE UTILITY COMPANIES INVOLVED AND REQUESTING A VISUAL VERIFICATION OF THE LOCATIONS OF THEIR UNDERGROUND FACILITIES. THE UTILITY COMPANIES ARE MEMBERS OF THE UNDERGROUND SERVICE ALERT (U.S.A.) ON-CALL PROGRAM. THE CONTRACTOR OR ANY SUBCONTRACTOR FOR THIS CONTRACT SHALL NOTIFY MEMBERS OF THE U.S.A. 48 HOURS IN ADVANCE OF PERFORMING EXCAVATION WORK BY CALLING THE TOLL-FREE NUMBER (800) 642-2444. EXCAVATION IS DEFINED AS BEING 18 OR MORE INCHES IN DEPTH BELOW THE EXISTING SURFACE.

THE CONTRACTOR IS CAUTIONED THAT ONLY EXCAVATION WILL REVEAL THE TYPES, EXTENT, SIZES, LOCATION, AND DEPTHS OF SUCH UNDERGROUND UTILITIES. HOWEVER, THE CONSULTANT CAN ASSUME NO RESPONSIBILITY FOR THE COMPLETENESS OR ACCURACY OF ITS DELINEATION OF SUCH UNDERGROUND UTILITIES, NOR FOR THE EXISTENCE OF OTHER BURIED OBJECTS OR UTILITIES WHICH ARE NOT SHOWN ON THESE DRAWINGS.

5. TREE PROTECTION AND MAINTENANCE REQUIREMENTS: ALL TRENCHING WITHIN THE DRIPLINE OF EXISTING TREES TO REMAIN SHALL BE BY HAND, WITH CARE TAKEN NOT TO CUT OR DAMAGE ROOTS OVER 1-INCH DIAMETER. TREES TO REMAIN SHALL BE FENCED WITH TEMPORARY FENCING, SUCH AS STEEL STAKES (MAX. 5 FEET O.C.) WITH WIRE MESH FABRIC (6X6 OPEN), CHAINLINK, OR SIMILAR, HEIGHT TO BE 5 FEET MINIMUM. FENCE SHALL BE PLACED AT THE DRIP LINE OF ALL EXISTING TREES.

EXISTING CONDITIONS LEGEND

DI	DRAIN INLET
SSMH	SANITARY SEWER MANHOLE
SDMH	STORM DRAIN MANHOLE
TYP	TYPICAL
CONC	CONCRETE
SPOT	SPOT ELEVATION
EP	EDGE OF PAVEMENT
FL	FLOWLINE
EB	ELECTRIC BOX
"16"	TREE SIZE
7 (6")	NUMBER OF CLUSTERS/TREE SIZE
TRANS	TRANSFORMER BOX
CLF	CHAIN LINK FENCE
WF	WOOD FENCE
CO	CLEAN OUT
MON	MONUMENT
UNK	UNKNOWN
BM	BENCHMARK
CC	CUT CROSS
ELEV	ELEVATION
MH	MANHOLE
	STORM DRAIN MANHOLE
	FIRE HYDRANT
	SEWER UTILITY MANHOLE
	STREET LIGHT BOX/PULL BOX
	LIGHT POLE (SINGLE)
	WATER VALVE
	WATER METER
	WATER VAULT
	DRAIN INLET
	BOLLARDS
	HANDICAP RAMP
	OVERHEAD POWER LINE
	POWER POLE
	IRRIGATION CONTROL VALVE
	CONCRETE PAD
	SIGN
	TREE
	FENCELINE (AS DESCRIBED)
	PALM TREE
	STONE AREA
	LIGHT POLE (DOUBLE)
	FIELD LIGHTS
	POWER POLE WITH LIGHTS
	BENCHMARK
	MANHOLE
	GUYWIRE

KEY MAP

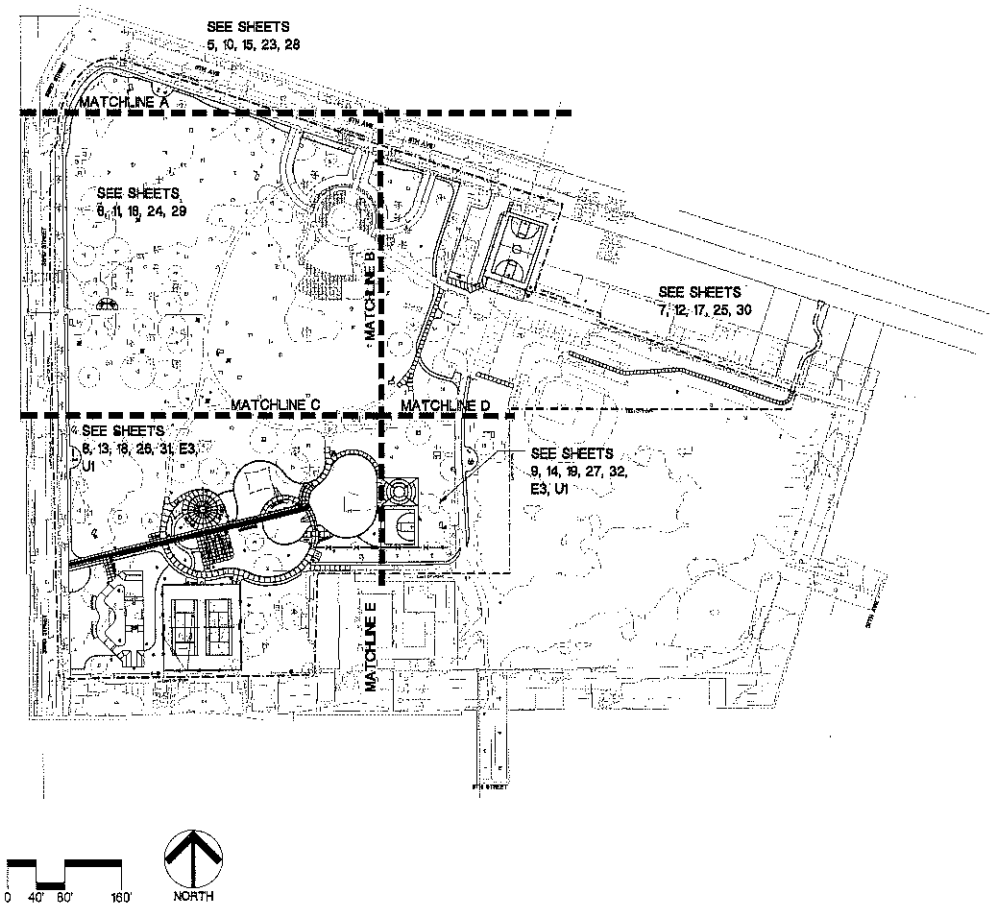

100% SUBMITTAL

811 Know what's below. Call before you dig.

Callander Associates Landscape Architecture, Inc.
CA PROJECT NO. 12.051

CITY OF SACRAMENTO
PARKS AND RECREATION DEPARTMENT
PARK, PLANNING, DESIGN, & DEVELOPMENT
LANDSCAPE ARCHITECTURE SECTION
915 I STREET, 5TH FLOOR,
SACRAMENTO, CA 95814

McCLATCHY PARK - L19136500

McCLATCHY PARK RENOVATION
GENERAL NOTES AND KEY MAP

LANDSCAPE ARCHITECT: BW
DESIGN BY/DRAWN BY: DM/BG
CAD FILE: 12.051
DATE: 4/17/13
SCALE:
CAD SCALE:
T. N.: L19136500
REVISIONS:

SHEET NO. 2 OF 52

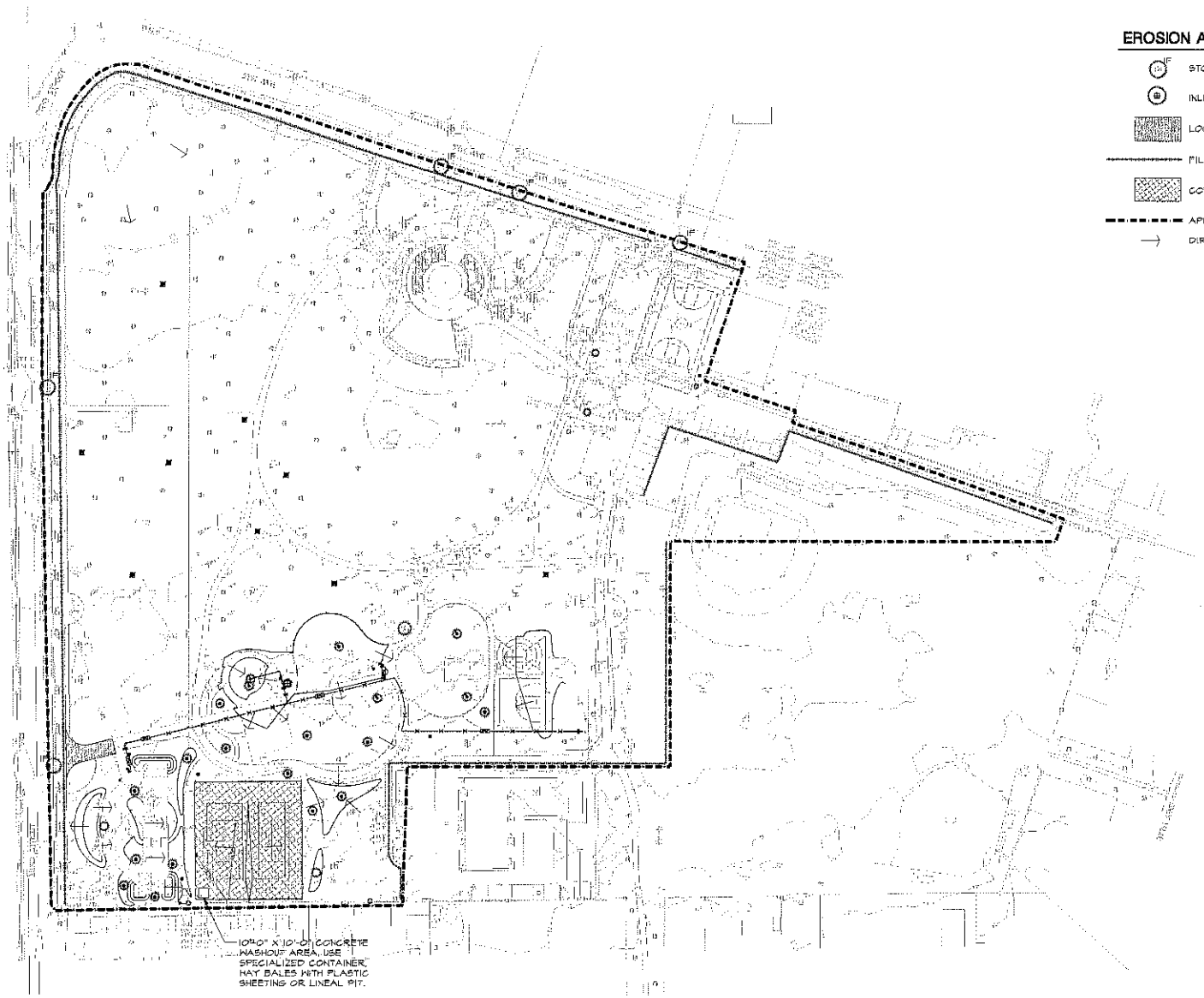

EROSION AND SEDIMENT CONTROL LEGEND

- STORM DRAIN INLET FILTER (1/4)
- INLET FILTER BAG WITH GRAVEL BEDS (4/4)
- LOCATION FOR STABILIZED CONSTRUCTION ENTRANCE (3/4)
- FILTER ROLL BARRIER (2/4)
- CONSTRUCTION STAGING AREA
- APPROXIMATE LIMIT OF WORK
- DIRECTION OF SHEET DRAINAGE

0 25' 50' 100'

811 Know what's below. Call before you dig.

Callander Associates Landscape Architecture, Inc.

CA PROJECT NO. 12.051

BUILDING DEPARTMENT SUBMITTAL

CITY OF SACRAMENTO
PARKS AND RECREATION DEPARTMENT
PARK, PLANNING, DESIGN, & DEVELOPMENT
LANDSCAPE ARCHITECTURE SECTION
915 I STREET, 5TH FLOOR,
SACRAMENTO, CA 95814
MCCLATCHY PARK - L19136500

MCCLATCHY PARK RENOVATION
EROSION AND SEDIMENT CONTROL PLAN

LANDSCAPE ARCHITECT: BK
DESIGN BY/DRAWN BY: DM/BC
CAD FILE: 12.051
DATE: 7/26/13
SCALE:
CAD SCALE:
P.N.: L19136500
REVISIONS:

SHEET NO. 3 OF 52

1/4 STORM DRAIN INLET FILTER
SECTION

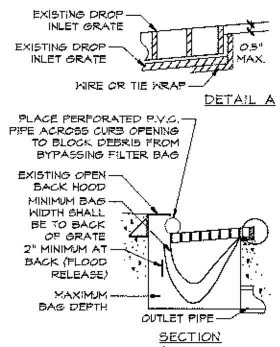

NOTES:
1. THE FILTER BAG SHALL BE MANUFACTURED FROM UV RESISTANT POLYPROPYLENE NYLON, POLYESTER, OR ETHYLENE FABRIC WITH A MINIMUM TENSILE STRENGTH OF 50 LBS PER LINEAL FOOT. AN EQUIVALENT OPENING SIZE NOT GREATER THAN A 20 SIEVE AND WITH A MINIMUM FLOW RATE OF 40GAL/SQ. FT.
2. THE FILTER BAG MAY BE SUSPENDED FROM OR HELD IN PLACE BY EXISTING INLET GRATE (OR OTHER APPROVED METHOD). PROVIDING NO MODIFICATION OR DRAINAGE SHALL BE DONE TO THE INLET GRATE OR FRAME. THE INLET GRATE SHALL NOT BE CAUSED TO REST MORE THAN 0.5" ABOVE THE INLET FRAME (SEE DETAIL A).
3. THE FILTER BAG MAY EXTEND TO THE BOTTOM OF THE INLET BOX PROVIDED THE OUTLET PIPE IS UNOBSTRUCTED
4. FLOWS SHALL NOT BE ALLOWED TO BYPASS THE BAG. THE BAG OR ITS FRAME SHALL CATCH FLOWS AT ALL SIDES OF THE INLET EXCEPT AS SHOWN FOR FLOOD RELEASE.
5. INLET FILTER BAGS SHALL BE INSPECTED WEEKLY AND AFTER EACH RAINFALL DURING THE WET SEASON AND MONTHLY DURING THE DRY SEASON. SEDIMENT AND DEBRIS SHALL BE REMOVED BEFORE ACCUMULATIONS HAVE REACHED ONE THIRD THE DEPTH OF THE BAG. BAGS SHALL BE REPAIRED OR REPLACED AS SOON AS DAMAGE OCCURS.

N.T.S.
12051_CURB INLET FILTER.dwg

2/4 FILTER ROLL
SECTION

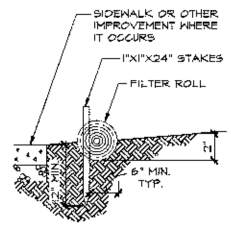

NOTES:
1. FILTER ROLL BARRIER SHALL BE CONSTRUCTED LONG ENOUGH TO EXTEND ACROSS THE EXPECTED FLOW PATH AND AS APPROVED BY THE CITY REPRESENTATIVE.
2. FILTER ROLL (8" TO 12" DIAMETER) SHALL BE PLACED INTO THE KEY TRENCH AND STAKES ON BOTH SIDES OF THE ROLL WITHIN 6 FEET OF EACH END AND THEN EVERY 3' TO 4'. STAKES SHALL BE DRIVEN IN ON ALTERNATING SIDES OF THE ROLL. ADJACENT ROLLS SHALL TIGHTLY ABUT.
3. CLEAR SUBGRADE TO REMOVE ALL LOCAL DEVIATIONS AND LARGE STONES OR DEBRIS THAT WILL INHIBIT CONTACT OF THE FILTER ROLL WITH THE SUBGRADE.
4. PRIOR TO ROLL INSTALLATION, CONSTRUCT A CONCAVE TRENCH 2 INCHES DEEP ALONG THE PROPOSED INSTALLATION ROUTE. FILTER ROLL SHALL BE INSTALLED WHERE INDICATED ON PLANS. THE BOTTOM EDGE OF THE FIBER ROLL SHALL EXTEND TO AND ACROSS THE BOTTOM OF THE TRENCH. THE TRENCH SHALL BE BACKFILLED TO 4 INCHES ABOVE GROUND AND COMPACTED TO BURY AND SECURE THE BOTTOM OF THE FILTER ROLL.
5. CONTRACTOR SHALL MAKE INSPECTIONS WEEKLY DURING THE WET SEASON, MONTHLY DURING THE DRY SEASON AND IMMEDIATELY AFTER EACH RAINFALL TO DETERMINE IF REPAIRS AND SEDIMENT REMOVAL IS REQUIRED. SEDIMENT SHALL BE REMOVED BEFORE IT HAS REACHED ONE THIRD THE HEIGHT OF THE FILTER ROLL BARRIER.

N.T.S.
12051_FILTER ROLL BARRIER.dwg

3/4 STABILIZED CONSTRUCTION ENTRANCE
SECTION/ PLAN

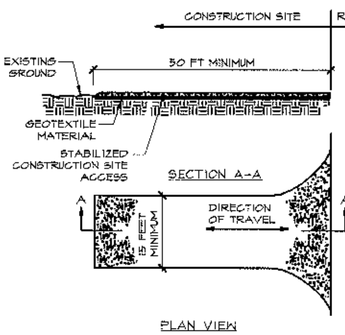

NOTE:
1. STABILIZED CONSTRUCTION SITE ACCESS SHALL BE CONSTRUCTED OF 3" TO 6" WASHED, WELL-GRADED GRAVEL OR CRUSHED ROCK. MATERIAL SHALL BE PLACED TO A MINIMUM THICKNESS OF 6 INCHES.
2. LENGTH OF ENTRANCE SHALL BE A MINIMUM OF 50 FEET. WIDTH SHALL BE A MIN. OF 15 FT OR GREATER IF NECESSARY TO COVER ALL VEHICULAR INGRESS AND EGRESS. PROVIDE AMPLE TURNING RADII.
3. THE ENTRANCE SHALL BE KEPT IN GOOD CONDITION BY OCCASIONAL TOP DRESSING WITH MATERIAL AS SPECIFIED IN NOTE 1.
4. ACCESS SHALL BE INSPECTED WEEKLY DURING PERIODS OF HEAVY USAGE, MONTHLY DURING NORMAL USAGE, AND AFTER EACH RAINFALL, WITH MAINTENANCE PROVIDED AS NECESSARY. PERIODIC TOP DRESSING SHALL BE DONE AS NEEDED.

N.T.S.
12051_STABILIZED ENTRANCE.dwg

4/4 INLET FILTER BAG WITH GRAVEL BEDS
PLAN

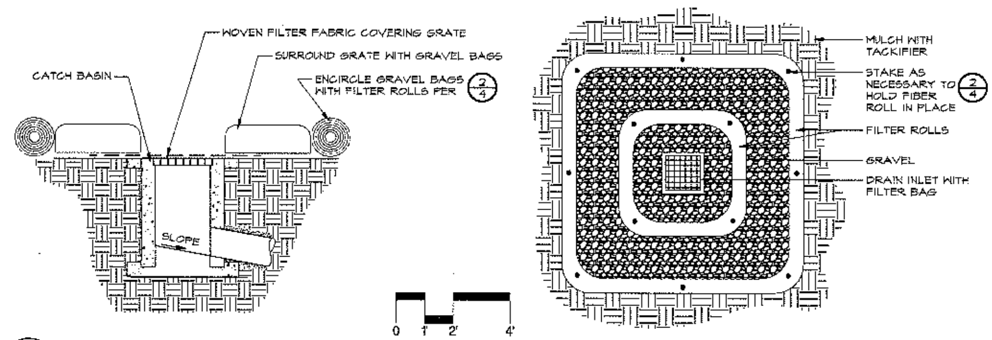

N.T.S.
12051_CATCH BASIN FILTER.dwg

EROSION AND SEDIMENT CONTROL NOTES

1. THE CONTRACTOR SHALL FOLLOW THE GUIDELINES FOR THE CITY OF SACRAMENTO'S "ADMINISTRATIVE AND TECHNICAL PROCEDURES MANUAL FOR GRADING, EROSION AND SEDIMENT CONTROL" FOR THE MEASURES SHOWN OR STATED ON THESE PLANS.
2. BETWEEN OCTOBER 15 AND MAY 15 EROSION CONTROL MEASURES SHALL BE IN PLACE AT THE END OF EACH WORKING DAY WHENEVER THE FIVE-DAY PROBABILITY OF RAIN EXCEEDS 30%. DURING THE REMAINDER OF THE YEAR, THEY SHALL BE IN PLACE AT THE END OF EACH WORKING DAY WHENEVER THE DAILY RAINFALL PROBABILITY EXCEEDS 30%.
3. ALL EROSION AND SEDIMENT CONTROL MEASURES SHALL BE MAINTAINED UNTIL DISTURBED AREAS ARE STABILIZED. CHANGES TO THIS EROSION AND SEDIMENT CONTROL PLAN SHALL BE MADE TO MEET FIELD CONDITIONS ONLY WITH THE APPROVAL OF OR AT THE DIRECTION OF CITY REPRESENTATIVE.
4. THIS PLAN MAY NOT COVER ALL THE SITUATIONS THAT ARISE DURING CONSTRUCTION DUE TO UNANTICIPATED FIELD CONDITIONS. VARIATIONS MAY BE MADE TO THE PLAN IN THE FIELD SUBJECT TO THE APPROVAL OF OR AT THE DIRECTION OF CITY REPRESENTATIVE.
5. ALL EROSION AND SEDIMENT CONTROL MEASURES SHALL BE CHECKED BEFORE AND AFTER ALL STORMS TO ENSURE MEASURES ARE FUNCTIONING PROPERLY.
6. CONTRACTOR SHALL MAINTAIN A LOG AT THE SITE OF ALL INSPECTIONS OR MAINTENANCE OF BMPS, AS WELL AS, ANY CORRECTIVE CHANGES TO THE BMPS OR EROSION AND SEDIMENT CONTROL PLAN.
7. IN AREAS WHERE SOIL IS EXPOSED, PROMPT REPLANTING WITH NATIVE COMPATIBLE, DROUGHT-RESISTANT VEGETATION SHALL BE PERFORMED. NO AREAS WILL BE LEFT EXPOSED OVER THE WINTER SEASON.
8. THE CONTRACTOR SHALL INSTALL THE STABILIZED CONSTRUCTION ENTRANCE PRIOR TO COMMENCEMENT OF GRADING. LOCATION OF THE ENTRANCE MAY BE ADJUSTED BY THE CONTRACTOR TO FACILITATE GRADING OPERATIONS. ALL CONSTRUCTION TRAFFIC ENTERING THE PAVED ROAD MUST CROSS THE STABILIZED CONSTRUCTION ENTRANCE. THE STABILIZED CONSTRUCTION ENTRANCE SHALL REMAIN IN PLACE UNTIL THE ROAD BASE ROCK COURSE IS COMPLETED.
9. NO SOIL, MORTAR, OR OTHER RESIDUE SHALL BE ALLOWED TO ENTER STREETS, GUTTERS, OR STORM DRAINS. ALL MATERIAL AND WASTE SHALL BE REMOVED FROM THE PROJECT SITE. ALL SEDIMENT DEPOSITED ON PAVED ROADWAYS SHALL BE SWEPT AT THE END OF EACH WORKING DAY OR AS NECESSARY.
10. CONTRACTOR SHALL IMPLEMENT HOUSEKEEPING PRACTICES AS FOLLOWS UTILIZING THE CONSTRUCTION STAGING AREA AS DEPICTED ON PLAN:

A. SOLID WASTE MANAGEMENT: PROVIDE DESIGNATED WASTE COLLECTION AREAS AND CONTAINERS. ARRANGE FOR REGULAR REMOVAL AND DISPOSAL. CLEAR SITE OF TRASH INCLUDING ORGANIC DEBRIS, PACKAGING MATERIALS, SCRAP OR SURPLUS BUILDING MATERIALS AND DOMESTIC WASTE DAILY.

B. MATERIAL DELIVERY AND STORAGE: PROVIDE A DESIGNATED MATERIAL STORAGE AREA WITH SECONDARY CONTAINMENT SUCH AS BERMING. STORE MATERIAL ON PALLETS AND PROVIDE COVERING FOR SOLUBLE MATERIALS. RELOCATE STORAGE AREA INTO BUILDING SHELL WHEN POSSIBLE. INSPECT AREA WEEKLY.

C. CONCRETE WASTE: PROVIDE A DESIGNATED AREA FOR A TEMPORARY PIT TO BE USED FOR CONCRETE TRUCK WASH-OUT. DISPOSE OF HARDENED CONCRETE OFFSITE. AT NO TIME SHALL A CONCRETE TRUCK DUMP ITS WASTE AND CLEAN ITS TRUCK INTO THE CITY STORM DRAINS VIA CURB AND GUTTER. INSPECT DAILY TO CONTROL RUNOFF, AND WEEKLY FOR REMOVAL OF HARDENED CONCRETE.

D. PAINT AND PAINTING SUPPLIES: PROVIDE INSTRUCTION TO EMPLOYEES AND SUBCONTRACTORS REGARDING REDUCTION OF POLLUTANTS INCLUDING MATERIAL STORAGE, USE, AND CLEAN UP. INSPECT SITE WEEKLY FOR EVIDENCE OF IMPROPER DISPOSAL.

E. VEHICLE FUELING, MAINTENANCE AND CLEANING: PROVIDE A DESIGNATED FUELING AREA WITH SECONDARY CONTAINMENT SUCH AS BERMING. DO NOT ALLOW MOBILE FUELING OF EQUIPMENT. PROVIDE EQUIPMENT WITH DRIP PANS. RESTRICT ONSITE MAINTENANCE AND CLEANING OF EQUIPMENT TO A MINIMUM. INSPECT AREA WEEKLY.

F. HAZARDOUS WASTE MANAGEMENT: PREVENT THE DISCHARGE OF POLLUTANTS FROM HAZARDOUS WASTES TO THE DRAINAGE SYSTEM THROUGH PROPER MATERIAL USE, WASTE DISPOSAL AND TRAINING OF EMPLOYEES. HAZARDOUS WASTE PRODUCTS COMMONLY FOUND ON-SITE INCLUDE BUT ARE NOT LIMITED TO PAINTS & SOLVENTS, PETROLEUM PRODUCTS, FERTILIZERS, HERBICIDES & PESTICIDES, SOIL STABILIZATION STABILIZATION PRODUCTS, ASPHALT PRODUCTS AND CONCRETE CURING PRODUCTS.

11. CONTRACTOR SHALL NOT USE EXISTING PARKING LOT OR PATHWAY SYSTEM FOR CONSTRUCTION ACTIVITIES. ALL DAMAGE TO EXISTING FACILITIES WILL BE REPAIRED BY CONTRACTOR AT NO ADDITIONAL COST TO THE CITY.
12. CONTRACTOR SHALL STORE ALL CONSTRUCTION MATERIAL AT ONE DESIGNATED LOCATION WHEN FEASIBLE AND/OR THE SITE HAS BEEN SHUT DOWN FOR WINTER MONTHS. ALL ITEMS WHICH COULD BE POTENTIAL POLLUTANTS SHALL BE COVERED OR IN A WATER TIGHT CONTAINER, AND STORED OFF THE GROUND.

Know what's below. Call before you dig. 811

Callander Associates Landscape Architecture, Inc.

CA PROJECT NO. 12.051

BUILDING DEPARTMENT SUBMITTAL

CITY OF SACRAMENTO
PARKS AND RECREATION DEPARTMENT
PARK, PLANNING, DESIGN, & DEVELOPMENT
LANDSCAPE ARCHITECTURE SECTION
915 I STREET, 5TH FLOOR,
SACRAMENTO, CA 95814

McCLATCHY PARK - L19136500

McCLATCHY PARK RENOVATION
EROSION AND SEDIMENT CONTROL PLAN

LANDSCAPE ARCHITECT: BW
DESIGN BY/DRAWN BY: DM/BC
CAD FILE: 12.051
DATE: 7/26/13
SCALE:
CAD SCALE:
P.N.: L19136500
REVISIONS

SHEET NO. 4 OF 52

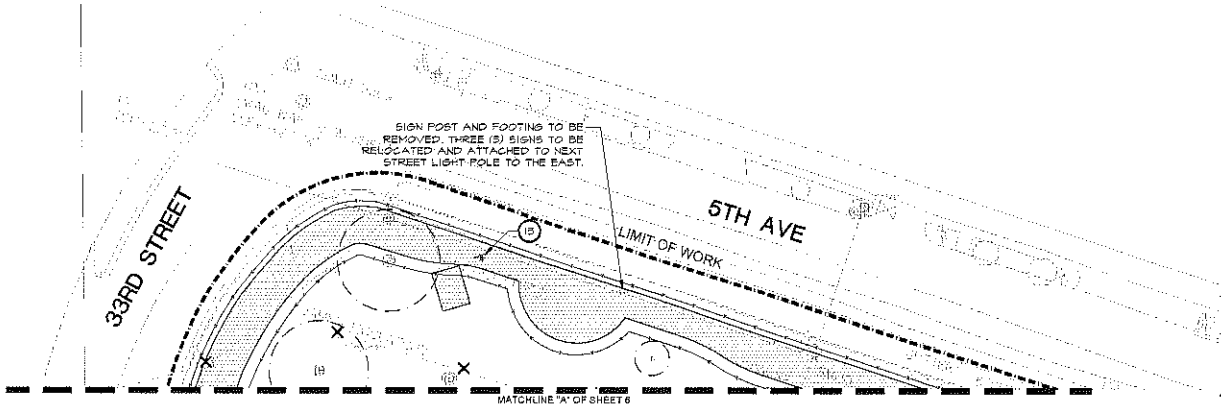

DEMOLITION NOTES

1. CLEAR AND GRUB. CONTRACTOR SHALL CLEAR AND GRUB EXISTING VEGETATION, UNLESS OTHERWISE INDICATED, AS REQUIRED FOR THE SITE CONSTRUCTION, IRRIGATION, AND PLANTING OPERATIONS. LIMITS OF CLEARING SHALL BE REVIEWED WITH CITY REPRESENTATIVE PRIOR TO COMMENCEMENT OF WORK. STRIP ALL ORGANIC MATTER TO A SUFFICIENT DEPTH TO COMPLETELY REMOVE SUCH MATERIAL.

   REMOVE ALL VISIBLE EXISTING IRRIGATION EQUIPMENT AND ANY BELOW-GRADE COMPONENTS THAT WOULD INTERFERE WITH THE WORK TO THE LIMIT OF WORK EXCEPT AS SHOWN TO BE MODIFIED.

   ALL DEMOLITION OPERATIONS WITHIN THE DRIP LINE OF TREES SHALL CONFORM TO GENERAL REQUIREMENTS.

   EXISTING SITE FURNISHINGS AND IRRIGATION EQUIPMENT TO BE REMOVED SHALL BE RETURNED TO THE CITY.

2. IRRIGATION EQUIPMENT. REMOVE ALL VISIBLE EXISTING IRRIGATION EQUIPMENT AND ANY BELOW-GRADE COMPONENTS THAT WOULD INTERFERE WITH THE WORK DURING TRENCHING AND/OR ROUGH GRADING OPERATIONS.

3. SAWCUTTING. ALL PAVEMENT AND CURB REMOVAL AS SHOWN ON THE PLAN SHALL BE ACCOMPLISHED BY SAWCUTTING.

   SAWCUTS SHALL BE NEAT AND CLEAN AND SHALL PROVIDE A SMOOTH TRANSITION BETWEEN NEW AND EXISTING FEATURES.

4. CONTRACTOR SHALL REMOVE EXISTING PLAY EQUIPMENT AND SWINGS AS INDICATED ON THE PLAN INCLUDING CONCRETE FOOTINGS AND DISPOSE OF OFF THE PROJECT SITE. SWING SEATS AND CHAINS SHALL BE RETURNED TO THE CITY.ALL CONSTRUCTION SHALL CONFORM TO THE CITY OF SACRAMENTO STANDARD SPECIFICATIONS, DATED 2007.

5. THE CONTRACTOR SHALL BE RESPONSIBLE FOR, FURNISH, AND MAINTAIN TEMPORARY 6' CHAIN LINK CONSTRUCTION FENCE AROUND PLAYGROUND DURING CONSTRUCTION. FENCE SHALL REMAIN IN PLACE UNTIL CONSTRUCTION IS COMPLETE AND PROJECT IS ACCEPTED BY CITY.

6. THE CONTRACTOR SHALL CONTACT UNDERGROUND SERVICE ALERT (1-800-642-2444) TWO (2) WORKING DAYS BEFORE WORK IS TO BEGIN. THE CONTRACTOR SHALL VERIFY LOCATION OF ALL EXISTING UTILITIES AND IS RESPONSIBLE FOR THEIR PROTECTION. RESTORATION OF DAMAGED UTILITIES SHALL BE MADE AT THE CONTRACTOR'S EXPENSE OF THE SATISFACTION OF THE CITY.

7. THE CONTRACTOR SHALL BE RESPONSIBLE FOR AS-BUILT DRAWINGS FOR ALL UNDERGROUND WORK THROUGHOUT THE COURSE OF CONSTRUCTION.

8. THE CONTRACTOR SHALL BE RESPONSIBLE FOR AND FURNISH AND MAINTAIN TEMPORARY SIGNS, BARRICADES AND OTHER FACILITIES TO ADEQUATELY SAFEGUARD THE GENERAL PUBLIC AND WORK, AND TO PROVIDE FOR THE PROPER ROUTING OF PEDESTRIAN TRAFFIC. CONSTRUCTION OPERATIONS SHALL COMPLY WITH THE WORK AREA AND TRAFFIC CONTROL HANDBOOK (W.A.T.C.H.).

9. ALL EXISTING TREES, NOT DESIGNATED TO BE REMOVED, SHALL BE PRESERVED, AND SHALL BE FULLY PROTECTED FROM INJURY OR DAMAGE BY THE CONTRACTOR AT HIS EXPENSE. THE CONTRACTOR SHALL NOT ALLOW STAGING OF CONSTRUCTION MATERIALS OR PARKING OF EQUIPMENT AND VEHICLES WITHIN A TREE DRIP LINE.

10. THE CONTRACTOR SHALL COORDINATE A MEETING WITH THE CONSTRUCTION INSPECTOR TO REVIEW EXISTING CONDITIONS. THE INSPECTOR AND CONTRACTOR SHALL MARK EXISTING CRACKED AND DAMAGED HARDSCAPE WORK AND TAKE EXISTING CONDITIONS PHOTOS PRIOR TO THE START OF CONSTRUCTION.

11. ALL EXISITING ITEMS ON THE SITE ARE TO BE PROTECTED AND REMAIN IN PLACE UNLESS NOTED OTHERWISE. ALL DAMAGE CAUSED BY THE CONTRACTOR DURING THE COURSE OF CONSTRUCTION SHALL BE REPLACED BY THE CONTRACTOR AT NO EXPENSE TO THE CITY.

12. CONTRACTOR SHALL FIELD VERIFY ALL SITE CONDITIONS RELATING TO THE PROJECT PRIOR TO BUILDING THE PROJECT. REPORT ALL DISCREPANCIES OR INACCURACIES TO THE CITY.

TREE PROTECTION NOTES

TREES SHALL BE PROTECTED BY THE FOLLOWING MEANS:

1. ALL TREE ROOTS REQUIRING PRUNING SHALL BE CUT CLEAN AND THE TREE AFFECTED MAY REQUIRE SUPPLEMENTAL IRRIGATION/FERTILIZATION AND PRUNING AS A RESULT OF ROOT CUTTING.
2. THE CONTRACTOR SHALL BE HELD LIABLE FOR ANY DAMAGE TO EXISTING TREES, I.E. TRUNK WOUNDS, BROKEN LIMBS, POURING OF ANY DELETERIOUS MATERIALS, OR CONCRETE WASHOUT UNDER THE DRIPLINE OF THE TREES. DAMAGES WILL BE ASSESSED USING THE "GUIDE TO PLANT APPRAISAL" 9TH EDITION PUBLISHED BY THE INTERNATIONAL SOCIETY OF ARBORICULTURE. AN APPRAISAL REPORT SHALL BE SUBMITTED FOR REVIEW BY THE CITY ARBORIST.
3. SUPPLEMENTAL IRRIGATION WILL BE REQUIRED FOR TREES ON AND ADJACENT TO THE PROJECT SITE WHERE THE IRRIGATION HAS BEEN TURNED OFF OR MODIFIED BECAUSE OF THE CONSTRUCTION ACTIVITIES.
4. THE TREES TO BE PRESERVED AND PROTECTION METHODS NOTED ABOVE SHALL BE IDENTIFIED ON ALL CONSTRUCTION PLANS FOR THIS PROJECT.
5. THE CONTRACTOR SHALL NOT ALLOW STORAGE OF CONSTRUCTION MATERIALS OR PARKING OF VEHICLES OR EQUIPMENT WITHIN TREE DRIP LINES.
6. WHEN WORK HAS TO OCCUR UNDER THE DRIPLINE OF EXISTING TREES NOT SCHEDULED FOR REMOVAL, THE CONTRACTOR SHALL USE ALL POSSIBLE CARE TO AVOID INJURY TO THE TREES AND TREE ROOTS. GRADE IN LINES RADIAL TO THE EXISTING TREES RATHER THAN TANGENTIAL. ALL PARTIAL CUTS OR TEARS THROUGH ROOTS TWO INCHES IN DIAMETER AND LARGER SHALL BE CUT CLEAN. TRENCHES ADJACENT TO TREES SHALL BE FILLED WITHIN 24 HOURS AFTER EXCAVATION, BUT WHERE THIS IS NOT POSSIBLE, THE SIDE OF THE TRENCH ADJACENT TO THE TREE AND ANY EXPOSED ROOTS SHALL BE KEPT SHADED AND MOIST WITH DAMPENED BURLAP OR CANVAS.

DEMOLITION LEGEND

- CLEAR AND GRUB, PER SPECS.
- REMOVE AND DISPOSE OF EXISTING ASPHALT PAVING AND BASE ROCK. ASSUME 6 INCH DEPTH TOTAL.
- REMOVE AND DISPOSE OF EXISTING CONCRETE PAVING AND BASE. ASSUME 4 INCH DEPTH TOTAL.
- REMOVE AND DISPOSE OF EXISTING PLAY AREA WOOD FIBER. ASSUME 12 INCH DEPTH TOTAL.
- SIZE — REMOVE AND DISPOSE OF EXISTING TREE, GRIND STUMP 2' BELOW PROPOSED GRADE.
- EXISTING TREE TO REMAIN - PROTECT IN PLACE.
- REMOVE AND DISPOSE OF ITEM.
- 6' CHAIN LINK CONSTRUCTION FENCING, PER SPECS. TO REMAIN IN PLACE UNTIL PROJECT IS ACCEPTED.
- 4' ORANGE VINYL FENCING. TO REMAIN IN PLACE UNTIL CONSTRUCTION INSPECTOR DIRECTS TO BE REMOVED.
- TREE PROTECTION FENCING
- REMOVE AND DISPOSE OF EXISTING CHAIN LINK FENCE
- SAWCUT
- T.R. — TO REMAIN
- T.B.R. — TO BE REMOVED
- REMOVE AND RETURN TO CITY OR RELOCATE EXISTING ROTOR PER IRRIGATION PLAN
- EXISTING ROTOR TO REMAIN
- EXISTING IRRIGATION LATERAL
- EXISTING IRRIGATION MAINLINE
- EXISTING IRRIGATION VALVE

DEMOLITION KEY

1. LIGHT POLE, FIXTURE, AND FOOTING TO BE REMOVED
2. BASKETBALL STANDARD AND FOOTING TO BE REMOVED
3. TENNIS COURT NETTING, POSTS, AND FOOTINGS TO BE REMOVED
4. PLAY EQUIPMENT AND FOOTINGS TO BE REMOVED
5. 12" PLAY AREA CONCRETE CURB TO BE REMOVED
6. 8" CONCRETE CURB TO BE REMOVED
7. 10 FT HIGH CHAIN LINK FENCE AND FOOTINGS TO BE REMOVED
8. BENCH AND FOOTINGS TO BE REMOVED
9. DRINKING FOUNTAIN TO REMAIN
10. 36" CONCRETE PIPE AND FOOTING TO BE REMOVED
11. PICNIC TABLE TO BE REMOVED
12. DISC GOLF BASKET TO BE RELOCATED PER LAYOUT PLAN
13. DISC GOLF TEE SIGN TO BE RELOCATED PER LAYOUT PLAN
14. CONCRETE MOWBAND TO BE REMOVED
15. PLAY AREA DRAIN TO BE REMOVED
16. PLAY AREA DRAIN PIPE TO BE REMOVED
17. MANHOLE TO BE REMOVED
18. REMOVE LATERAL LINE AND MODIFY PER IRRIGATION PLAN
19. PROTECT MAINLINE, VALVE, AND LATERALS IN PLACE AND MODIFY PER IRRIGATION PLAN.

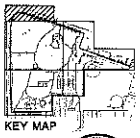
KEY MAP

0 10' 20' 40'

NORTH

811 Know what's below. Call before you dig.

Callander Associates Landscape Architecture, Inc.
11180 Fox Creek Drive, Suite 100
Rancho Cordova, CA 95670
T 916.852.0123
F 916.852.0124

CA PROJECT NO. 12.051

BUILDING DEPARTMENT SUBMITTAL

CITY OF SACRAMENTO
PARKS AND RECREATION DEPARTMENT
PARK, PLANNING, DESIGN, & DEVELOPMENT
LANDSCAPE ARCHITECTURE SECTION
915 I STREET, 5TH FLOOR,
SACRAMENTO, CA 95814

McCLATCHY PARK - L19136500

McCLATCHY PARK RENOVATION
DEMOLITION PLAN

LANDSCAPE ARCHITECT: BW
DESIGN BY/DRAWN BY: DM/BC
CAD FILE: 12.051
DATE: 7/26/12
SCALE:
CAD SCALE:
P.N. L19136500
REVISIONS

SHEET NO. 5 OF 52

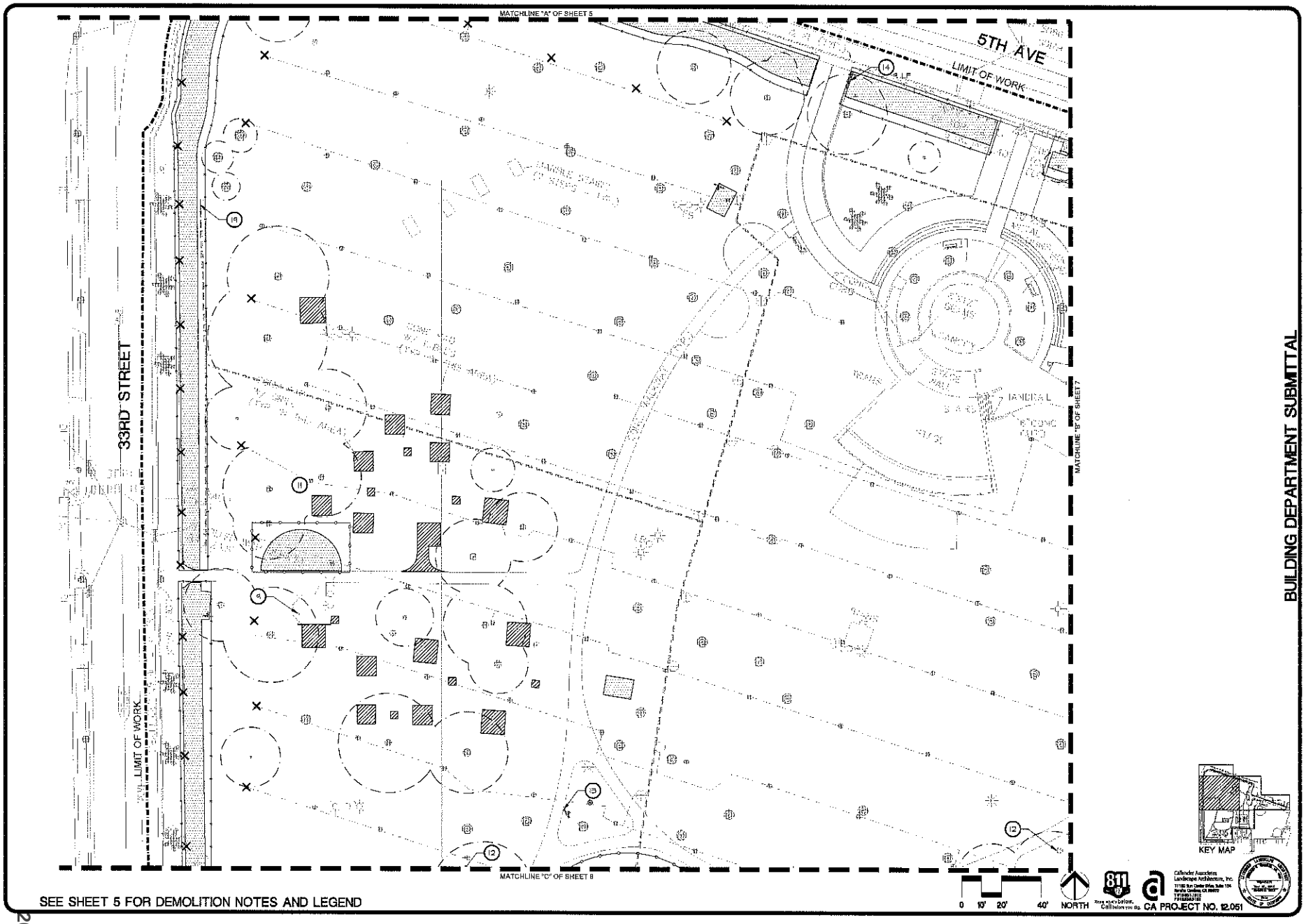

SEE SHEET 5 FOR DEMOLITION NOTES AND LEGEND

BUILDING DEPARTMENT SUBMITTAL

CITY OF SACRAMENTO
PARKS AND RECREATION DEPARTMENT
PARK, PLANNING, DESIGN, & DEVELOPMENT
LANDSCAPE ARCHITECTURE SECTION
915 I STREET, 5TH FLOOR,
SACRAMENTO, CA 95814

McCLATCHY PARK - L19136500

McCLATCHY PARK RENOVATION
DEMOLITION PLAN

LANDSCAPE ARCHITECT: BN
DESIGN BY/DRAWN BY: DM/BC
CAD FILE: 12.051
DATE: 7/28/15
SCALE:
CAD SCALE:
P.N.: L19136500
REVISIONS:

SHEET NO. 6 OF 52

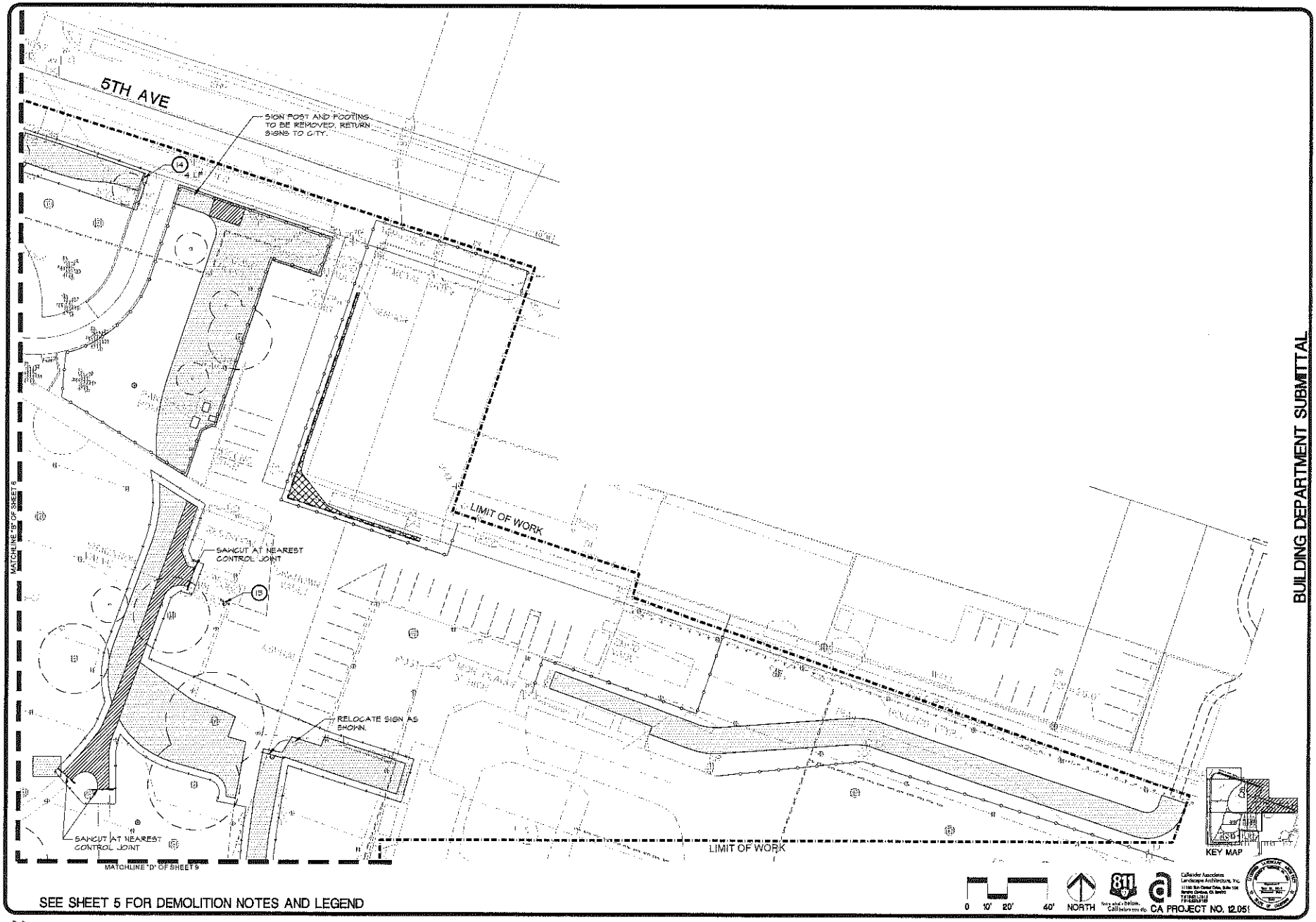

SEE SHEET 5 FOR DEMOLITION NOTES AND LEGEND

BUILDING DEPARTMENT SUBMITTAL

CITY OF SACRAMENTO
PARKS AND RECREATION DEPARTMENT
PARK, PLANNING, DESIGN, & DEVELOPMENT
LANDSCAPE ARCHITECTURE SECTION
915 I STREET, 5TH FLOOR,
SACRAMENTO, CA 95814

McCLATCHY PARK - L19136500

McCLATCHY PARK RENOVATION
DEMOLITION PLAN

LANDSCAPE ARCHITECT: BW
DESIGN BY/DRAWN BY: DM/BC
CAD FILE: 12.051
DATE: 7/26/13
SCALE:
CAD SCALE:
P.N.: L19136500
REVISIONS

SHEET NO. 7 OF 52

SEE SHEET 5 FOR DEMOLITION NOTES AND LEGEND

BUILDING DEPARTMENT SUBMITTAL

CITY OF SACRAMENTO
PARKS AND RECREATION DEPARTMENT
PARK, PLANNING, DESIGN, & DEVELOPMENT
LANDSCAPE ARCHITECTURE SECTION
915 I STREET, 5TH FLOOR,
SACRAMENTO, CA 95814

McCLATCHY PARK - L19136500

McCLATCHY PARK RENOVATION
DEMOLITION PLAN

LANDSCAPE ARCHITECT: BW
DESIGN BY/DRAWN BY: DM/BG
CAD FILE: 12.051
DATE: 7/26/12
SCALE:
CAD SCALE:
P.N. L19136500
REVISIONS

SHEET NO. 8 OF 52

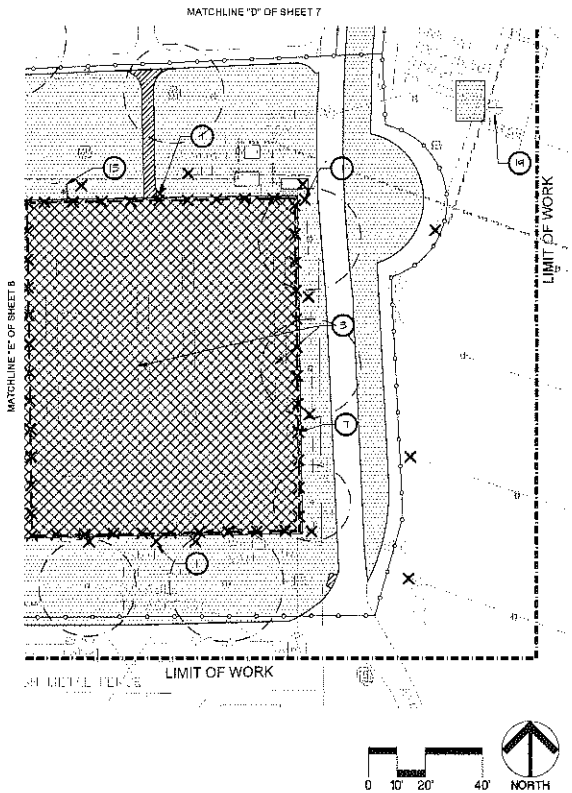

SEE SHEET 5 FOR DEMOLITION NOTES AND LEGEND

BUILDING DEPARTMENT SUBMITTAL

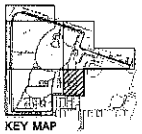

811 Know what's below. Call before you dig.

Calander Associates Landscape Architecture, Inc.

CA PROJECT NO. 12.051

CITY OF SACRAMENTO
PARKS AND RECREATION DEPARTMENT
PARK, PLANNING, DESIGN, & DEVELOPMENT
LANDSCAPE ARCHITECTURE SECTION
915 I STREET, 5TH FLOOR,
SACRAMENTO, CA 95814

McCLATCHY PARK - L19126500

McCLATCHY PARK RENOVATION
DEMOLITION PLAN

LANDSCAPE ARCHITECT: BH
DESIGN BY/DRAWN BY: DMBC
CAD FILE: (2.051)
DATE: 7/26/15
SCALE:
CAD SCALE:
P.N.: L19126500
REVISIONS:

SHEET NO. 9 OF 52

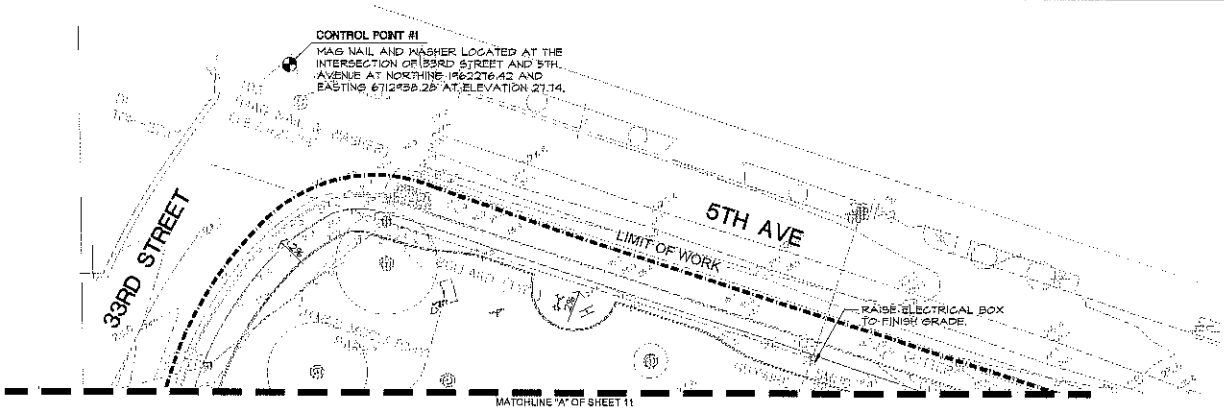

GRADING AND DRAINAGE LEGEND

26	PROPOSED CONTOUR: 1'-0" INTERVAL TYP. (EXISTING CONTOURS ARE SCREENED ON PLAN)
+63.50	PROPOSED SPOT ELEVATION (EXISTING SPOT ELEVATIONS ARE SCREENED ON PLAN)
	CATCH BASIN, SEE SPECS (1/14)
	PLAY AREA DRAIN, SEE SPECS (2/14)
	MISTER AREA DRAIN: WATER ODYSSEY #N200 AVAILABLE THROUGH ALL ABOUT PLAY, GLEN HURSTER (916) 923-2180. (2/55)
	MISTER AREA ACTIVATOR/DRAIN: WATER ODYSSEY #HLP-6x1-0x.5. AVAILABLE THROUGH ALL ABOUT PLAY, GLEN HURSTER (916) 923-2180. (4/55)
	DRINKING FOUNTAIN DRAIN (1/33)
©	DRINKING FOUNTAIN CLEANOUT (1/33)
	MAINTENANCE HOLE , TYPE #3, PER CIVIL PLANS
— — — —	SOLID DRAINLINE: PVC SDR 35, SIZE PER DRAINLINE SCHEDULE
2%	DIRECTION AND SLOPE PERCENT OF SHEET DRAINAGE
— · · →	SWALE W/ MIN. 1.5% SLOPE
RIM 23.0 / INV 21.0	RIM ELEVATION AT PROPOSED DRAINAGE STRUCTURE / INVERT ELEVATION AT PROPOSED DRAINAGE STRUCTURE
	FLUSH CONDITION
HP	HIGH POINT
TC	TOP OF CURB
BC	BOTTOM OF CURB

GRADING AND DRAINAGE CITY STANDARD NOTES

1. SEE GENERAL NOTES ON COVER, SHEET 1.
2. SEE SPECIAL PROVISIONS FOR ADDITIONAL INFORMATION AND REQUIREMENTS.
3. WALKWAY CROSS SLOPES SHALL BE 1% MIN., 2% MAX. AND SHALL NOT EXCEED 4.8% SLOPE RUNNING EXCEPT AT SPECIFIED RAMP LOCATIONS.
4. ALL EXISTING IMPROVEMENTS AND FACILITIES OF NEIGHBORING PROPERTIES SHALL BE PROTECTED AND SHALL NOT BE DISTURBED EXCEPT AS REQUIRED BY THE CONSTRUCTION OF THESE IMPROVEMENTS. IF DAMAGE TO THESE EXISTING FACILITIES OCCURS DUE TO THE CONSTRUCTION OF PROPOSED IMPROVEMENTS, THE NECESSARY REPAIRS WILL BE AT THE EXPENSE OF THE CONTRACTOR.
5. ALL GRADING SHALL BE DONE IN ACCORDANCE WITH THE CITY OF SACRAMENTO REQUIREMENTS AND STANDARD SPECIFICATIONS LATEST EDITION.
6. PUBLIC SAFETY AND TRAFFIC CONTROL SHALL BE PROVIDED IN ACCORDANCE WITH THE STANDARD CONSTRUCTION SPECIFICATIONS AND AS DIRECTED BY THE PARK CONSTRUCTION INSPECTOR. SAFE VEHICULAR AND PEDESTRIAN ACCESS SHALL BE PROVIDED AT ALL TIMES DURING CONSTRUCTION.
7. THE CONTRACTOR SHALL NOTIFY THE CITY OF SACRAMENTO PARK CONSTRUCTION INSPECTOR IMMEDIATELY UPON COMPLETION OF STAKING.
8. THE CONTRACTOR SHALL NOTIFY THE CITY OF SACRAMENTO PARK CONSTRUCTION INSPECTOR TWO WORKING DAYS PRIOR TO COMMENCING WORK. THE CONTRACTOR SHALL NOT START ANY GRADING UNTIL THE CITY COMPLETES PRE-GRADING INSPECTION.
9. THE CONTRACTOR SHALL BE RESPONSIBLE FOR THE PROTECTION OF ALL SURVEY MONUMENTS AND OTHER SURVEY MARKERS DURING CONSTRUCTION. ALL SUCH MONUMENTS OR MARKERS DESTROYED DURING CONSTRUCTION SHALL BE REPLACED AT THE CONTRACTOR'S EXPENSE.
10. GRADES SHALL BE ESTABLISHED TO MAINTAIN CONSTANT SLOPES BETWEEN SPOT ELEVATIONS AND CONTOURS INDICATED ON THE PLANS AND CONFORM TO EXISTING GRADES.
11. THE CONTRACTOR SHALL ADHERE TO THE CITY OF SACRAMENTO'S DUST CONTROL MEASURES PER THE GRADING ORDINANCE. NORMAL WETTING PROCEDURES SHALL NOT OCCUR ON EXCESSIVELY WINDY DAYS. DAILY CLEAN-UP OF DUST CARRIED ONTO STREET SURFACES BY CONSTRUCTION SHALL BE REQUIRED. UPON COMPLETION OF SITE PREPARATION ACTIVITIES, NE CONTRACTOR SHALL TAKE MEASURES TO REDUCE EROSION. PAVING AND PLANTING SHALL BE COMPLETED AS SOON AS POSSIBLE. THE CONTRACTOR SHALL DESIGNATE A PERSON TO MONITOR THE DUST CONTROL PROGRAM AND OVERSEE IMPLEMENTATION OF THE DUST CONTROL STRATEGIES.
12. ALL CONTOURS AND GRADES IN IMPROVED AREAS SHALL BE FINISHED SMOOTH WITH NO ABRUPT ELEVATION CHANGES.
13. THE GRADING WORK UNDER THIS CONTRACT CONSISTS OF EARTHWORK AND COMPACTION REQUIRED TO ESTABLISH ROUGH GRADES TO CONFORM TO THE CONTOURS, GRADES, LINES, AND SHAPES AS INDICATED ON THE PLANS. FINAL ADJUSTMENTS MAY BE NECESSARY IN THE FIELD BY RAISING OR LOWERING PROPOSED GRADES.

I HAVE COMPLIED WITH THE CRITERIA OF THE SACRAMENTO CITY CODE CHAPTER 15-92 AND APPLIED THEM ACCORDINGLY FOR THE EFFICIENT USE OF WATER IN THE GRADING PLAN.

LANDSCAPE ARCHITECT'S SIGNATURE DATE

GRADING AND DRAINAGE NOTES

1. GRADING AND DRAINAGE: ALL PROPOSED PAVING, CURBS, WALLS, AND PLANTING AREAS SHALL SMOOTHLY CONFORM TO EXISTING ADJACENT FEATURES TO REMAIN. PROVIDE POSITIVE DRAINAGE ON ALL PAVING AND THROUGHOUT ALL PLANTING AREAS. CONTRACTOR SHALL FLOOD PAVED AREAS UPON COMPLETION AND RECONSTRUCT ANY LOW SPOTS AS DIRECTED. SLOPE PAVING 4.9% MAXIMUM WITH A CROSS SLOPE OF 1% MINIMUM TO 2% MAXIMUM.
2. HORIZONTAL AND VERTICAL CONTROL: CONTROL POINT #1 IS MAG NAIL AND WASHER LOCATED AT THE INTERSECTION OF 33RD STREET AND 5TH AVENUE AT NORTHING 1962276.42 AND EASTING 6712938.28 AT ELEVATION 27.74.
3. TOPSOIL STOCKPILE: STRIP AND STOCKPILE NATIVE TOPSOIL IN AN AMOUNT SUFFICIENT TO INSTALL A 6" LAYER OF TOPSOIL IN ALL PROPOSED PLANTING AREAS. NO SOIL SHALL BE STOCKPILED FROM BENEATH EXISTING PAVED AREAS TO BE REMOVED PRIOR TO INDEPENDENT LAB VERIFICATION THAT NO HERBICIDE IS PRESENT. STOCKPILE LOCATION(S) TO BE DETERMINED DURING CONSTRUCTION.
4. SUBSOIL: IF HERBICIDE IS PRESENT, TWELVE INCHES OF SUBSOIL SHALL BE REMOVED FROM ALL EXISTING PAVED AREAS TO BE REMOVED WHERE NEW PLANTING OR LAWN AREA ARE SHOWN.
5. TOPSOIL PLACEMENT: CROSS-RIP ALL ROUGH-GRADED PLANTING AREA SUBSOILS AS SPECIFIED PRIOR TO TOPSOIL PLACEMENT.
6. BACKFILL: EXCAVATED MATERIAL NOT SUITABLE FOR BACKFILLING SHALL BE REMOVED AND LEGALLY DISPOSED OF OFF-SITE.
7. GRADING: CONTRACTOR SHALL PERFORM ALL EARTHWORK AND GRADING PER GEOTECHNICAL ENGINEER'S RECOMMENDATIONS.
8. PLAY AREA SUBGRADE: CONTRACTOR SHALL GRADE PROPOSED PLAY AREA SUBGRADE TO SLOPE AT 1% MINIMUM TOWARD PLAY AREA CATCH BASIN.
9. BALANCE CUT/FILL: THE INTENT OF THE PLANS IS THAT THE SITE BALANCES WITH NO NET IMPORT OR EXPORT OF FILL. ANY DISCREPANCIES SHALL BE RESOLVED IN THE FIELD.
10. ADD FILL MATERIAL WHERE CONCRETE PADS OR PAVING ARE REMOVED. PROVIDE POSITIVE DRAINAGE. SEE DEMOLITION PLAN FOR LOCATIONS.

DRAINLINE SCHEDULE

PIPE	DIAM	SLOPE	LENGTH
A	6"	1.0%	32'
B	8"	1.0%	27'
C	8"	1.0%	36'
D	8"	1.0%	16'
E	8"	1.0%	21'
F	4"	2.0%	16'
G	8"	1.0%	61'
H	6"	0.5%	57'
I	6"	1.0%	17'
J	8"	0.5%	39'
K	6"	1.0%	44'
L	8"	0.5%	66'
M	8"	0.5%	60'
N	4"	2.0%	8'
O	4"	1.4%	35'
P	6"	0.5%	65'
Q	8"	0.5%	102'
R	4"	2.0%	24'
S	8"	0.6%	65'
T	6"	1.0%	22'
U	8"	0.5%	90'
V	8"	0.5%	44'
W	6"	1.0%	60'
X	6"	1.0%	62'
Y	8"	0.6%	60'
Z	6"	2.0%	32'
AA	8"	0.5%	108'
BB	6"	0.5%	98'
CC	6"	1.0%	9'

BUIDING DEPARTMENT SUBMITTAL

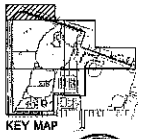
KEY MAP

0 10' 20' 40' NORTH

Call before you dig. CA PROJECT NO. 12.051

Callander Associates Landscape Architecture, Inc.

CITY OF SACRAMENTO
PARKS AND RECREATION DEPARTMENT
PARK PLANNING, DESIGN, & DEVELOPMENT
LANDSCAPE ARCHITECTURE SECTION
915 I STREET, 5TH FLOOR,
SACRAMENTO, CA 95814
McCLATCHY PARK - L19136500

McCLATCHY PARK RENOVATION
GRADING AND DRAINAGE PLAN

LANDSCAPE ARCHITECT: BH
DESIGN BY/DRAWN BY: DM/BC
CAD FILE: 12.051
DATE: 7/26/12
SCALE:
CAD SCALE:
P.N.: L19136500
REVISIONS

SHEET NO. 10 OF 52

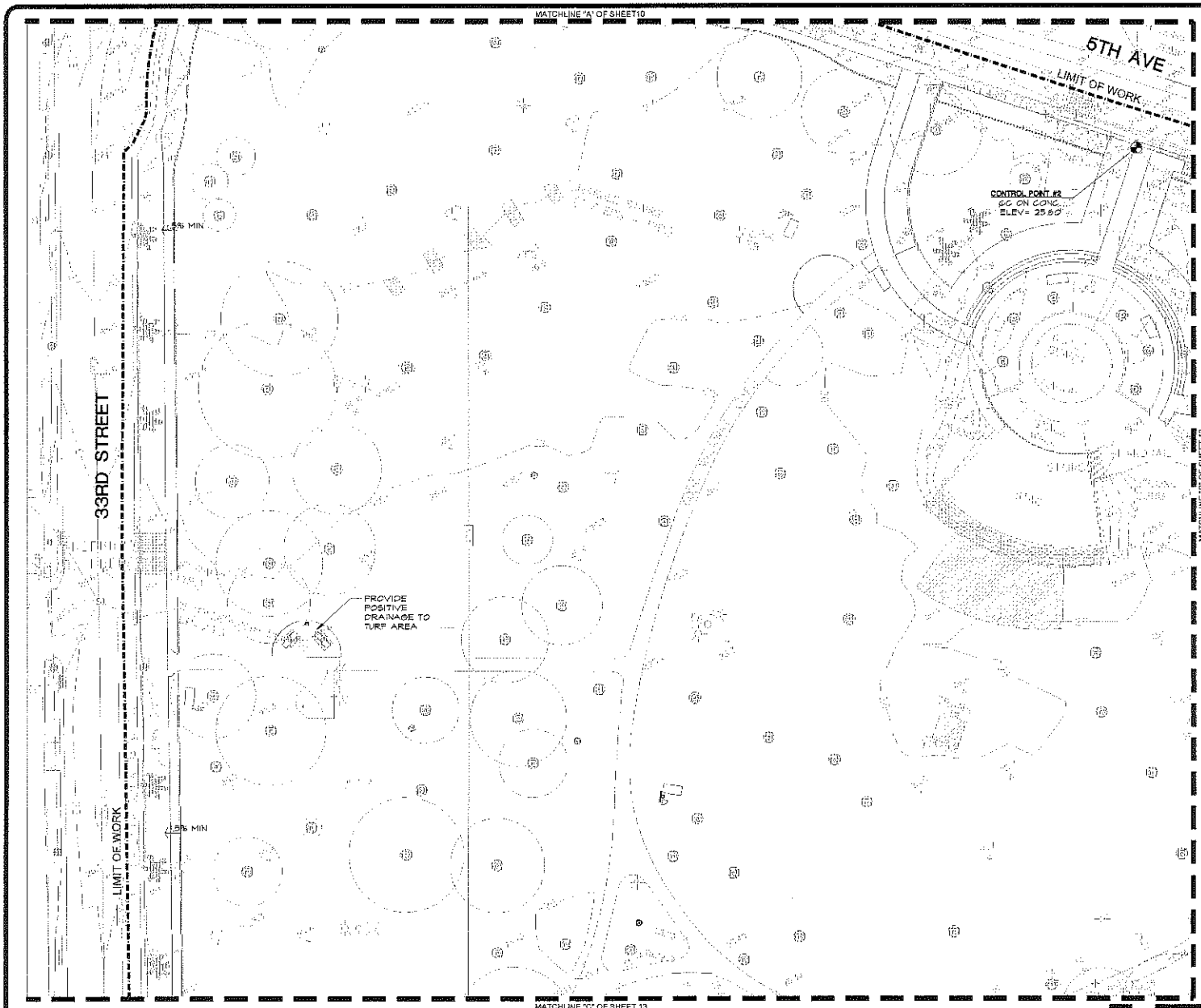

SEE SHEET 10 FOR GRADING NOTES AND LEGEND

0 10' 20' 40'

NORTH

Know what's below. Call before you dig.

CA PROJECT NO. 12.051

KEY MAP

BUILDING DEPARTMENT SUBMITTAL

CITY OF SACRAMENTO
PARKS AND RECREATION DEPARTMENT
PARK, PLANNING, DESIGN & DEVELOPMENT
LANDSCAPE ARCHITECTURE SECTION
915 I STREET, 5TH FLOOR,
SACRAMENTO, CA 95814

McCLATCHY PARK - L19136500

McCLATCHY PARK RENOVATION
GRADING AND DRAINAGE PLAN

LANDSCAPE ARCHITECT: BK
DESIGN BY/DRAWN BY: DM/BC
CAD FILE: 12.051
DATE: 7/26/13
SCALE:
CAD SCALE:
P.N.: L19136500
REVISIONS

SHEET NO. 11 OF 52

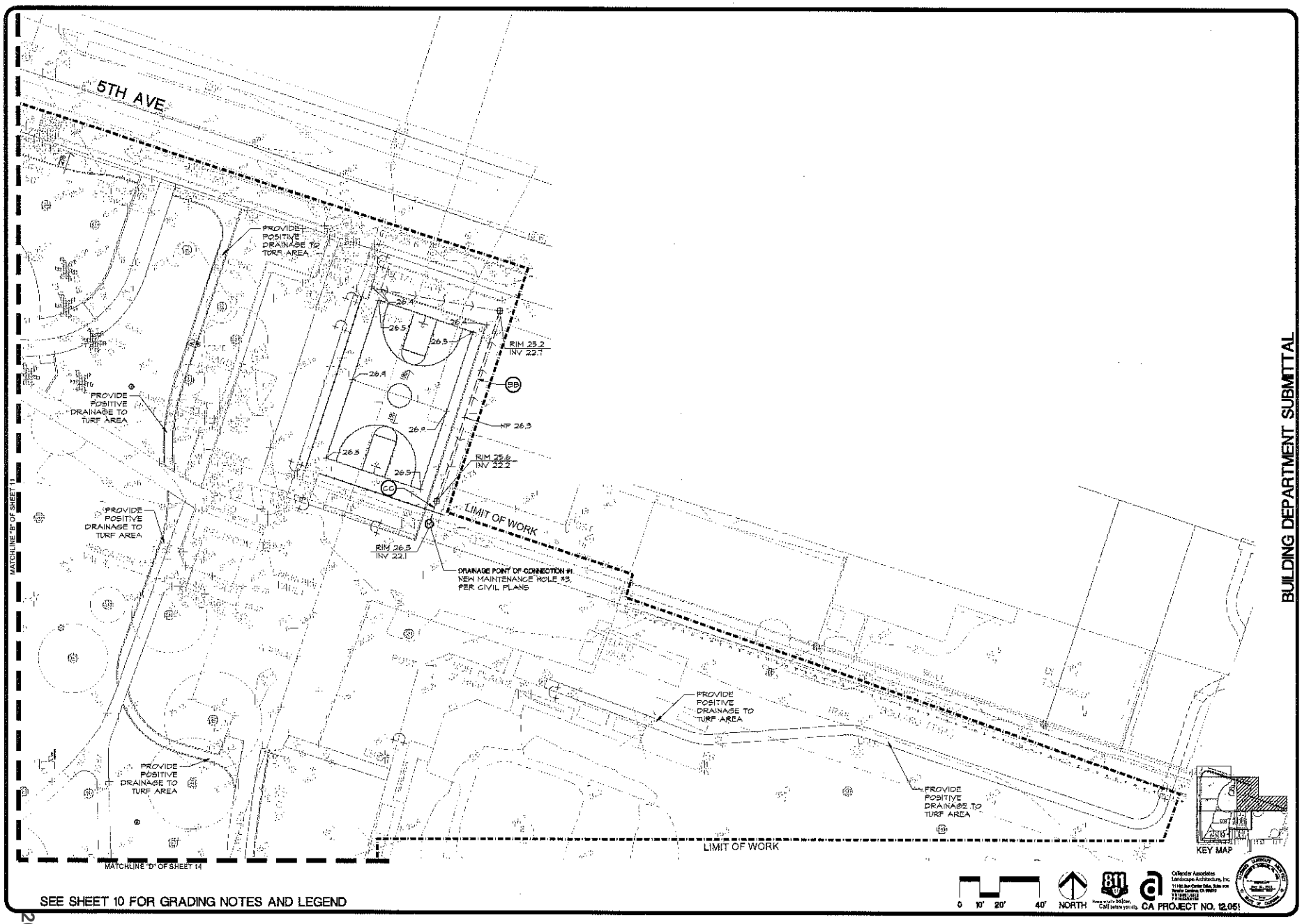

SEE SHEET 10 FOR GRADING NOTES AND LEGEND

BUILDING DEPARTMENT SUBMITTAL

CITY OF SACRAMENTO
PARKS AND RECREATION DEPARTMENT
PARK, PLANNING, DESIGN, & DEVELOPMENT
LANDSCAPE ARCHITECTURE SECTION
915 I STREET, 5TH FLOOR,
SACRAMENTO, CA 95814

McCLATCHY PARK - L19136500

McCLATCHY PARK RENOVATION
GRADING AND DRAINAGE PLAN

LANDSCAPE ARCHITECT: BW
DESIGN BY/DRAWN BY: DM/BC
CAD FILE: 12.051
DATE: 7/26/13
SCALE:
CAD SCALE:
P.N. L19136500
REVISIONS

SHEET NO. 12 OF 52

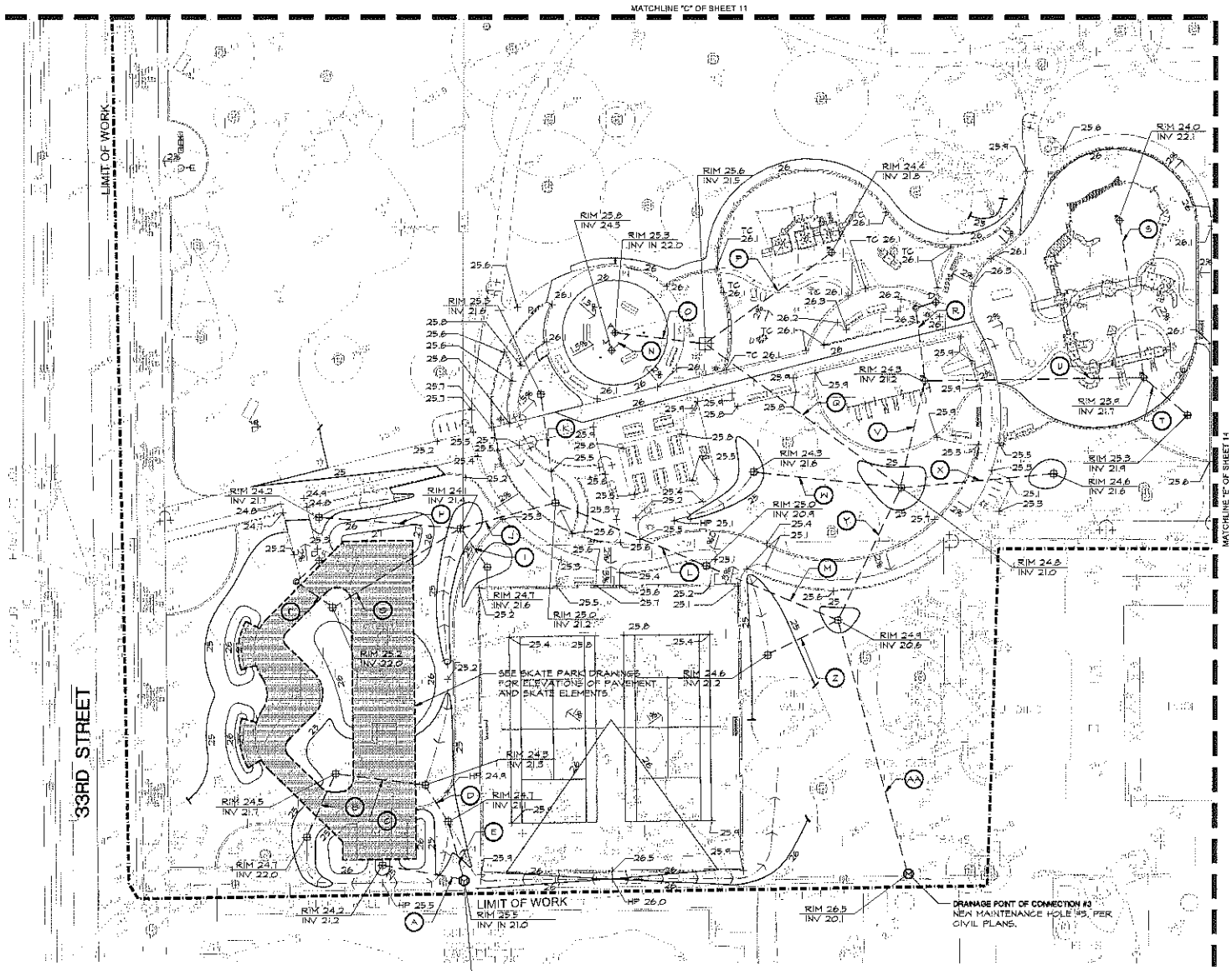

SEE SHEET 10 FOR GRADING NOTES AND LEGEND

BUILDING DEPARTMENT SUBMITTAL

KEY MAP

CITY OF SACRAMENTO
PARKS AND RECREATION DEPARTMENT
PARK, PLANNING, DESIGN & DEVELOPMENT
LANDSCAPE ARCHITECTURE SECTION
915 I STREET, 5TH FLOOR,
SACRAMENTO, CA 95814
McCLATCHY PARK - L19136500

McCLATCHY PARK RENOVATION
GRADING AND DRAINAGE PLAN

LANDSCAPE ARCHITECT: BH
DESIGN BY/DRAWN BY: DM/BC
CAD FILE: 12.051
DATE: 7/26/13
SCALE:
CAD SCALE:
T.M.: L19136500
REVISIONS:

SHEET NO. 3 OF 52

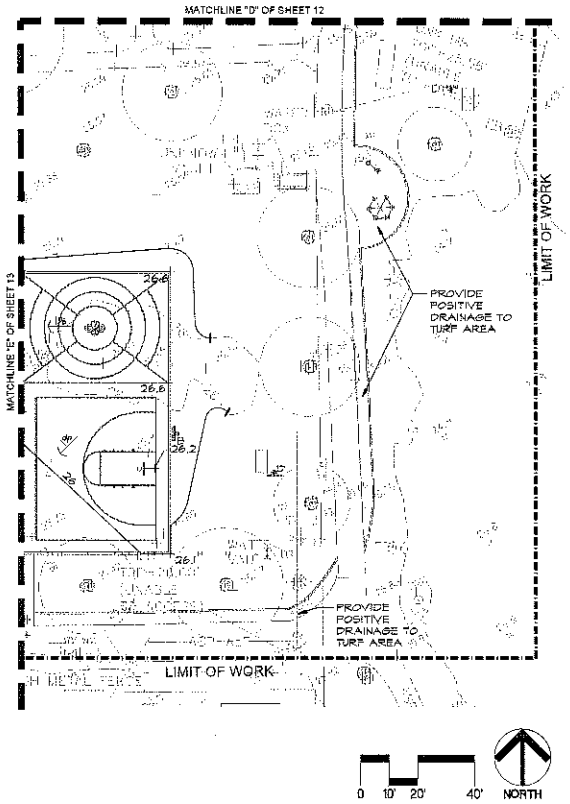

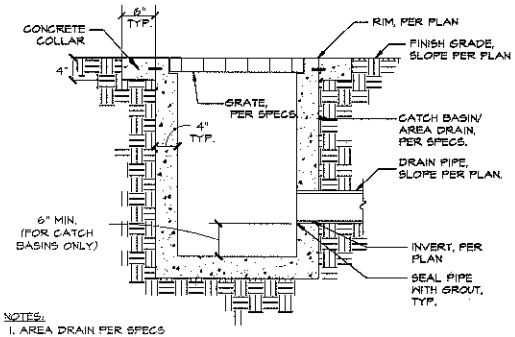

NOTES:
1. AREA DRAIN PER SPECS
2. GRATE, PER SPECS
3. CATCH BASIN MAY BE POURED IN PLACE OR PRECAST.
4. 6" CONCRETE COLLAR SURROUNDS CATCH BASIN ONLY.
5. GROUT SHALL BE NON-SHRINK EPOXY GROUT, MEADOWS "SEAL-TIGHT", OR APPROVED EQUAL.

1/14 CATCH BASIN / AREA DRAIN

0 1/2' 1' 2'

12051_CITY OF SAC CATCH BASIN.DWG

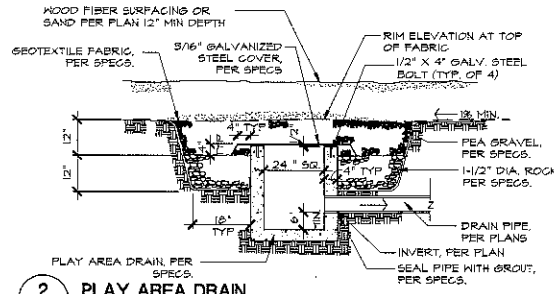

2/14 PLAY AREA DRAIN

CITY OF SAC PLAY AREA DRAIN.DWG

BUILDING DEPARTMENT SUBMITTAL

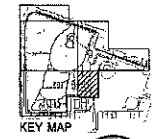

KEY MAP

811 Call before you dig.

Callander Associates Landscape Architecture, Inc.

CA PROJECT NO. 12.051

CITY OF SACRAMENTO
PARKS AND RECREATION DEPARTMENT
PARK, PLANNING, DESIGN, & DEVELOPMENT
LANDSCAPE ARCHITECTURE SECTION
915 I STREET, 5TH FLOOR,
SACRAMENTO, CA 95814

McCLATCHY PARK - L19136500

McCLATCHY PARK RENOVATION
GRADING AND DRAINAGE PLAN

LANDSCAPE ARCHITECT: BW
DESIGN BY/DRAWN BY:
CAD FILE: 12.051
DATE: 7/26/13
SCALE:
CAD SCALE:
P.N.: L19136500
REVISIONS

SHEET NO. 14 OF 52

SEE SHEET 10 FOR GRADING NOTES AND LEGEND

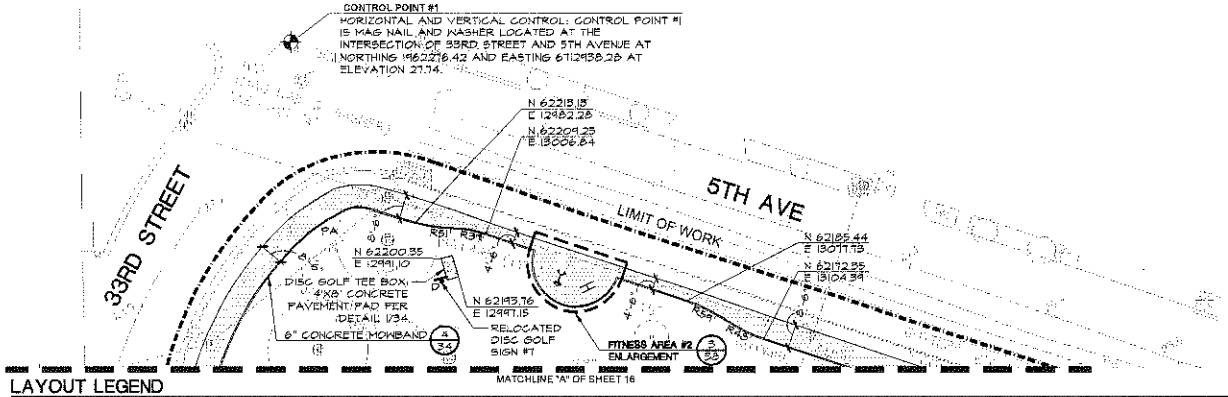

EXPANSION JOINT, TYP. 2/34
CONCRETE PAVEMENT
SCORE JOINT, TYP.

STABILIZED DECOMPOSED GRANITE, PER SPECS. 3/34

PLAY AREA RUBBER SURFACING, PER SPECS SEE SHEET 22 FOR COLORS. 2/35

PLAY AREA WOOD FIBER, PER SPECS 7/34

MISTER AREA PAVEMENT, PER SPECS. COLORS: ZENITH BLUE, CAPRI TEAL. 1/34

ASPHALT PAVEMENT 3/35

BASKETBALL COURT PAVEMENT 9/35

SPORTS COURT SURFACING, PER SPECS. COLORS: AUSTRALIAN OPEN TRUE BLUE, SAHARA SAND. 4/35

SKATE PARK IMPROVEMENTS

LAYOUT LEGEND

PICNIC TABLE: PATTERSON WILLIAMS #3120-08-8' STRAPPED STEEL TABLE WITH MATCHING 8' BENCHES, SURFACE MOUNT WITH POLYESTER POWDER FINISH, COLOR CAST BRONZE. AVAILABLE THROUGH DAVID O'KEEFE COMPANY, JEFF WHITMAN (925) 984-2075. QUANTITY: (6)

ADA PICNIC TABLE: PATTERSON WILLIAMS #3120-08-ADA-8' STRAPPED STEEL TABLE WITH MATCHING 8' BENCHES, SURFACE MOUNT WITH POLYESTER POWDER FINISH, COLOR CAST BRONZE. AVAILABLE THROUGH DAVID O'KEEFE COMPANY, JEFF WHITMAN (925) 984-2075. QUANTITY: (2)

SERVING TABLE: PATTERSON WILLIAMS #3120-08-8' STRAPPED STEEL TABLE ONLY, NO BENCHES, SURFACE MOUNT WITH POLYESTER POWDER FINISH, COLOR CAST BRONZE. AVAILABLE THROUGH DAVID O'KEEFE COMPANY, JEFF WHITMAN (925) 984-2075. QUANTITY (1)

BENCH: PATTERSON WILLIAMS #3107-08-8' LONG STRAPPED STEEL BENCH WITH BACK AND ARMS, INCLUDES OPTIONAL ARM REST, SURFACE MOUNT WITH POLYESTER POWDER FINISH, COLOR CAST BRONZE. AVAILABLE THROUGH DAVID O'KEEFE COMPANY, JEFF WHITMAN (925) 984-2075. QUANTITY: (11)

BACKLESS BENCH: PATTERSON WILLIAMS #3113-08-8' STRAPPED STEEL BENCH WITHOUT BACK WITH MID ARM REST, SURFACE MOUNT WITH POLYESTER POWDER FINISH, COLOR CAST BRONZE. AVAILABLE THROUGH DAVID O'KEEFE COMPANY, JEFF WHITMAN (925) 984-2075. QUANTITY: (7)

GAME TABLE: PATTERSON WILLIAMS #3120-08-(C)-8' STRAPPED STEEL TABLE WITH MATCHING 8' BENCHES, INCLUDES 2 CUSTOM GAME TOP INSERTS, SURFACE MOUNT WITH POLYESTER POWDER FINISH, COLOR CAST BRONZE. AVAILABLE THROUGH DAVID O'KEEFE COMPANY, JEFF WHITMAN (925) 984-2075. QUANTITY: (1)

ACCESSIBLE GAME TABLE: PATTERSON WILLIAMS #3120-08-(C)-ADA-8' ADA ACCESSIBLE STRAPPED STEEL TABLE WITH MATCHING 8' BENCHES, INCLUDES 2 CUSTOM GAME TOP INSERTS, SURFACE MOUNT WITH POLYESTER POWDER FINISH, COLOR CAST BRONZE. AVAILABLE THROUGH DAVID O'KEEFE COMPANY, JEFF WHITMAN (925) 984-2075. QUANTITY: (1)

TRASH RECEPTACLE: PATTERSON WILLIAMS #3150 WITH SIDE OPENING DOOR, FLAT COVER, POLYESTER POWDER FINISH, COLOR CAST BRONZE, SURFACE MOUNT, AVAILABLE THROUGH DAVID O'KEEFE COMPANY, JEFF WHITMAN (925) 984-2075. QUANTITY: (6)

BIKE RACK: PATTERSON WILLIAMS #1700-00 - ROUND UP BIKE RACK IN-GROUND MOUNT, COLOR CAST BRONZE. AVAILABLE THROUGH DAVID O'KEEFE COMPANY, JEFF WHITMAN (925) 984-2075. QUANTITY (6)

DRINKING FOUNTAIN: MOST DEPENDABLE FOUNTAIN MODEL# M-25-2, COLOR TEXTURED PYRITE. AVAILABLE THROUGH HUSBAND & ASSOCIATES (925) 426-5001. QUANTITY (2)

GROUP GRILL: OUTDOOR CREATION GROUP GRILL SITE BBQ WITH GEAR DRIVEN ADJUSTMENT, MODEL 3001AG, COLOR SHALL BE LIGHT GREY. AVAILABLE THROUGH OUTDOOR CREATIONS, CHAD SMITH (530) 365-6126. QUANTITY (1)

SMALL GRILL: PATTERSON WILLIAMS #1140-00- SINGLE 15" X 20" BARBECUE WITH 3 1/2" O.D. POST, SURFACE MOUNT, INCLUDES OPTIONAL SHELF. AVAILABLE THROUGH DAVID O'KEEFE COMPANY, JEFF WHITMAN (925) 984-2075. QUANTITY: (1)

BASKETBALL GOAL: TRUE BOUNCE. POSTS: 5"x5"x3/8" SQUARE STEEL POLES WITH 4' EXTENSION MODEL #PA554, COLOR BLACK. BACKBOARD: 42"x72"x1/4" MODEL XL7042, W/ 72", COLOR CLEAR. BACKBOARD PAD MODEL #BP072, COLOR GREEN. GOALS: HEAVY DUTY BREAKAWAY MODEL RB1000. NETS: NYLON, MODEL BN 141. AVAILABLE THROUGH TRUE BOUNCE, CHRISTINE WINTERS (866) 873-3715. QUANTITY (3 EACH) 8/36

INTERPRETIVE SIGNAGE: 24" x 36" 3/4" THICK INTERPRETIVE SIGN PANELS SHALL BE PROVIDED BY THE CITY. CONTRACTOR TO PROVIDE CANTILEVER SIGN PEDESTALS WITH 3" SQUARE POSTS (45 DEGREE) FOR 24" X 36" SIGNS, INGROUND MOUNTED. AVAILABLE FROM BEST EXHIBITS, (800) 365-4882. COLOR: BLACK. QUANTITY (3)

RELOCATED DISC GOLF SIGN

EXISTING DISC GOLF SIGN

ADA PARKING SIGN

PLAY AREA RULES SIGN: 18"X24" PROVIDED BY CITY. INSTALL ON FENCE IN LOCATION APPROVED BY CITY. QUANTITY (3)

MISTER AREA RULES SIGN: 18"X24" PROVIDED BY CITY. INSTALL ON FENCE IN LOCATION APPROVED BY CITY. QUANTITY (1)

HALF BASKETBALL COURT SIGN: INSTALL IN LOCATION APPROVED BY CITY. QUANTITY (1) 2/37

PLAY AREA FENCE: MONTAGE FLIB SERIES, MAJESTIC 2R FLB 3'T 8' PANEL COLOR BLACK. 5/35
AVAILABLE THROUGH AMERISTAR, ED GARINI (310) 552-8605.

TENNIS COURT FENCING 6/35

POST AND CABLE FENCE 3/36

TENNIS COURT NET AND POSTS: PATTERSON WILLIAMS, POST #2201-20 (PAIR), COLOR TO BE POWDER BLACK. NET #5352, PREMIUM TENNIS NET. CENTER TIE-DOWN GROUND ANCHOR #5371-20. CENTER TIE-DOWN STRAP: 8371-30. 7/36
AVAILABLE THROUGH DAVID O'KEEFE COMPANY, JEFF WHITMAN (925) 984-2075. QUANTITY: (2)

RELOCATED DISC GOLF BASKET

EXISTING DISC GOLF BASKET

DROP SHOT GOALS: LANDSCAPE STRUCTURES, DROP SHOT WITH STEEL POSTS POWDER COATED BLACK, HEIGHTS VARY. 6/36
AVAILABLE TROUGH ROSS RECREATION. CONTACT CHRIS TAIT (916) 923-3768. QUANTITY (4)

CAROUSEL HORSE MISTER: WATER ODYSSEY, CAROUSEL HORSE #WS777-1, 3 NOZZLES. 5/33
AVAILABLE TROUGH ALL ABOUT PLAY, KRISTIN PETTY (916) 207-1555, QUANTITY (3)

COOL STICK MISTER: WATER ODYSSEY, COOL STICK #WC50-1337T, 3 NOZZLES. 5/33
AVAILABLE TROUGH ALL ABOUT PLAY, KRISTIN PETTY (916) 207-1555, QUANTITY (5)

SOLAR PATH LIGHT: REFER TO ELECTRICAL PLANS, TYP. OF 3

ORNAMENTAL LIGHT: REFER TO ELECTRICAL PLANS, TYP. OF 4

SECURITY CAMERA: FLASHCAM 8805X SOLAR, DIGITAL CAMERA WITH WIRELESS DOWNLOAD, BY Q-STAR TECHNOLOGY OR APPROVED EQUAL. AVAILABLE THROUGH YVETT CAMPOS, (310) 375-3801 OR EMAIL YCAMPOS@QSTARTECH.COM. INSTALL SECURITY CAMERA AND CAMERA SIGNAGE ON POSTS PER DETAILS. SECURITY CAMERAS QUANTITY (3), POSTS QUANTITY (2) SIGNAGE QUANTITY (2). 1/37

FITNESS AREA#1 EQUIPMENT: GREENFIELDS:
#GR2005-1-23 2 PERSON AIR WALKER, QUANTITY (1)
#GR2005-1-45A ACCESSIBLE LAT PULL DOWN, QUANTITY (1) 1/38
AVAILABLE TROUGH ALL ABOUT PLAY, KRISTIN PETTY (916) 207-1555

FITNESS AREA#2 EQUIPMENT: GREENFIELDS
#GR2005-1-14, 2 PERSON DIP STATION, QUANTITY (1)
#GR2005-1-48A-W ACCESSIBLE CHEST PRESS, QUANTITY (1) 2/38
AVAILABLE TROUGH ALL ABOUT PLAY, KRISTIN PETTY (916) 207-1555

FITNESS AREA#3 EQUIPMENT: GREENFIELDS
#GR2005-1-12, WEIGHT LIFT, QUANTITY (1)
#GR2004-1-33 MULTI LEVEL BARS, QUANTITY (1) 3/38
AVAILABLE TROUGH ALL ABOUT PLAY, KRISTIN PETTY (916) 207-1555

TOT AREA SHADE CANOPY (ADD ALTERNATE #1): POLIGON, INIP 30X35-4DB-1REV, SQUARE COLUMNS, POWDER COAT. FRAME COLOR: ALMOND.TOP COLOR: VARIEGATED 2 COLOR TOP AQUATIC BLUE AND CAYENNE. AVAILABLE TROUGH ALL ABOUT PLAY, KRISTIN PETTY (916) 207-1555. QUANTITY (1). 1/40

PICNIC SHELTER: POLIGON, REK 24X24 SOLID GABLE.
FRAME COLOR: ALMOND, ROOF COLOR: BRANDY WINE.
AVAILABLE TROUGH ALL ABOUT PLAY, KRISTIN PETTY (916) 207-1555 1/41

KEY MAP

0 10' 20' 40'

NORTH

811 Know what's below. Call before you dig.

Calander Associates Landscape Architecture, Inc.
11141 Sun Center Drive, Suite 100
Rancho Cordova, CA 95670
916.851.1813
916.851.1812

CA PROJECT NO. 12.051

SEE SHEET 17 FOR LAYOUT NOTES

BUILDING DEPARTMENT SUBMITTAL

CITY OF SACRAMENTO
PARKS AND RECREATION DEPARTMENT
PARK, PLANNING, DESIGN & DEVELOPMENT
LANDSCAPE ARCHITECTURE SECTION
915 I STREET, 5TH FLOOR,
SACRAMENTO, CA 95814
McCLATCHY PARK - L19136500

McCLATCHY PARK RENOVATION
LAYOUT PLAN

LANDSCAPE ARCHITECT: BN
DESIGN BY/DRAWN BY: DW/JB
DATE FILE: 12.051
DATE: 7/28/13
SCALE:
CAD SCALE:
P.W.: L19136500
REVISIONS:

SHEET NO. 15 OF 52

MATCHLINE "A" OF SHEET 15

5TH AVE

LIMIT OF WORK

33RD STREET

CONTROL POINT #2
HORIZONTAL AND VERTICAL CONTROL: CONTROL POINT #2 IS MAG NAIL AND WASHER LOCATED AT THE INTERSECTION OF 33RD STREET AND 5TH AVENUE AT NORTHING 1962107.72 AND EASTING 6713320.84 AT ELEVATION 25.60.

N 62141.87
E 12909.04
N 62123.68
E 12905.02
N 62106.22
E 12904.53
N 62091.80
E 12902.55

N 62161.83
E 13134.44
N 62159.30
E 13147.72
N 62156.46
E 13163.26
N 62138.53
E 13204.47
N 62136.66
E 13206.52
N 62145.81
E 13184.75

6" CONCRETE MOWBAND 4/34

N 62076.78
E 13110.75
DISC GOLF TEE BOX: 4'X8' CONCRETE PAVEMENT PAD PER DETAIL 1/34
N 62067.84
E 13110.72

SMALL PICNIC AREA ENLARGEMENT 2/19

N 61871.61
E 12907.47
DISC GOLF TEE BOX: 4'X8' CONCRETE PAVEMENT PAD PER DETAIL 1/34
N 61869.62
E 12906.91

N 61829.23
E 13115.31
DISC GOLF TEE BOX: 4'X8' CONCRETE PAVEMENT PAD PER DETAIL 1/34
N 61824.00
E 13122.62
RELOCATED DISC GOLF SIGN #9

PA

MATCHLINE "B" OF SHEET 17

MATCHLINE "C" OF SHEET 18

SEE SHEET 15 FOR LAYOUT LEGEND
SEE SHEET 17 FOR LAYOUT NOTES

0 10' 20' 40'

NORTH

811 Dig Alert
Know what's below. Call before you dig.

Callander Associates Landscape Architecture, Inc.
1120 Iron Gate Drive, Suite 104
Mitchell Gardens, CA 95691
T 916.681.1313
F 916.608.9150

CA PROJECT NO. 12.051

KEY MAP

BUILDING DEPARTMENT SUBMITTAL

CITY OF SACRAMENTO
PARKS AND RECREATION DEPARTMENT
PARK, PLANNING, DESIGN, & DEVELOPMENT
LANDSCAPE ARCHITECTURE SECTION
915 I STREET, 5TH FLOOR,
SACRAMENTO, CA 95814

McCLATCHY PARK - L19136500

McCLATCHY PARK RENOVATION
LAYOUT PLAN

LANDSCAPE ARCHITECT: BW
DESIGN BY/DRAWN BY: DM/JB
CAD FILE: 12.051
DATE: 7/26/13
SCALE:
CAD SCALE:
P.N. L19136500
REVISIONS

SHEET NO. 16 OF 52

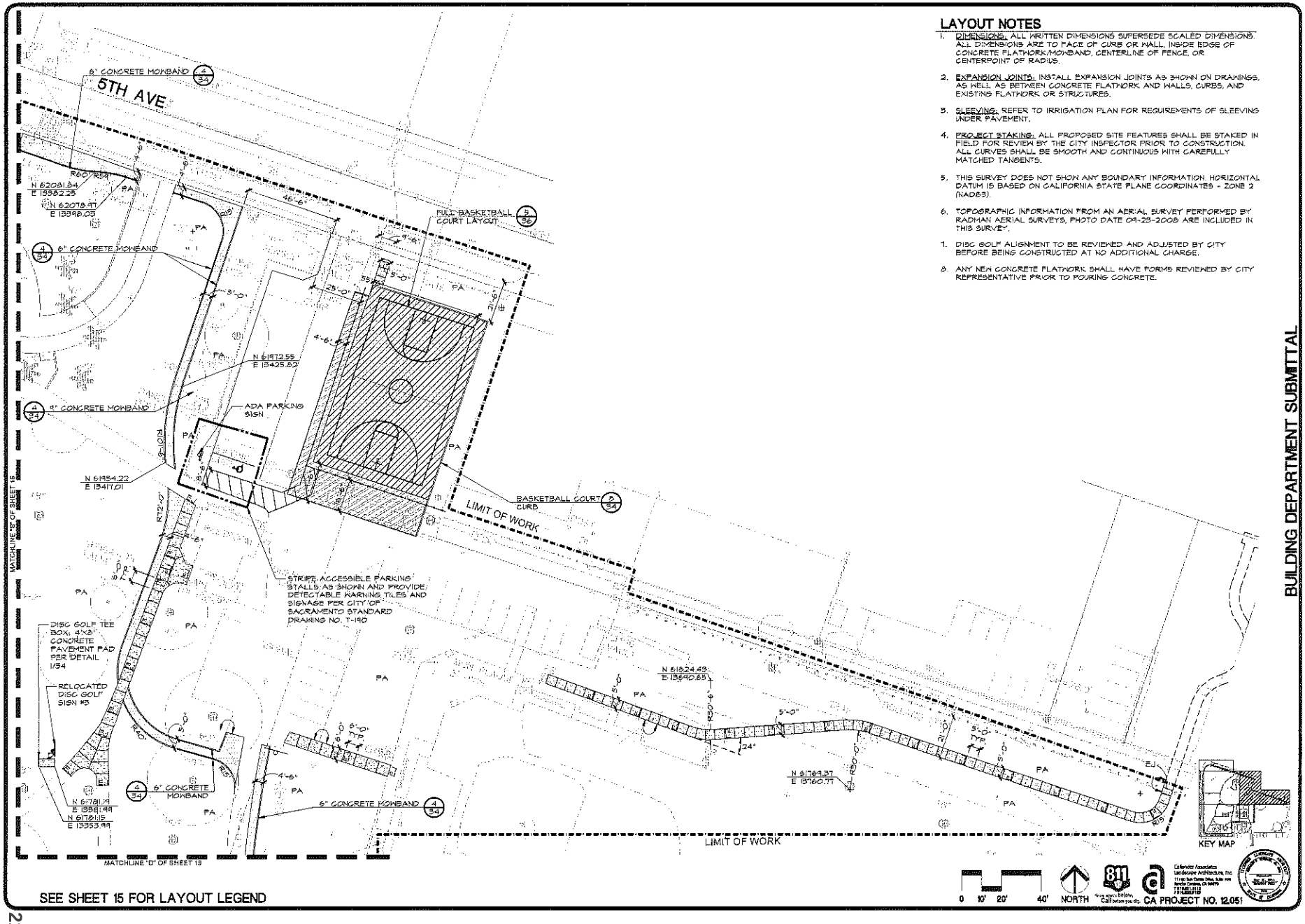

LAYOUT NOTES

1. DIMENSIONS: ALL WRITTEN DIMENSIONS SUPERSEDE SCALED DIMENSIONS. ALL DIMENSIONS ARE TO FACE OF CURB OR WALL, INSIDE EDGE OF CONCRETE FLATWORK/MONBAND, CENTERLINE OF FENCE, OR CENTERPOINT OF RADIUS.
2. EXPANSION JOINTS: INSTALL EXPANSION JOINTS AS SHOWN ON DRAWINGS, AS WELL AS BETWEEN CONCRETE FLATWORK AND WALLS, CURBS, AND EXISTING FLATWORK OR STRUCTURES.
3. SLEEVING: REFER TO IRRIGATION PLAN FOR REQUIREMENTS OF SLEEVING UNDER PAVEMENT.
4. PROJECT STAKING: ALL PROPOSED SITE FEATURES SHALL BE STAKED IN FIELD FOR REVIEW BY THE CITY INSPECTOR PRIOR TO CONSTRUCTION. ALL CURVES SHALL BE SMOOTH AND CONTINUOUS WITH CAREFULLY MATCHED TANGENTS.
5. THIS SURVEY DOES NOT SHOW ANY BOUNDARY INFORMATION. HORIZONTAL DATUM IS BASED ON CALIFORNIA STATE PLANE COORDINATES - ZONE 2 (NAD83).
6. TOPOGRAPHIC INFORMATION FROM AN AERIAL SURVEY PERFORMED BY RADMAN AERIAL SURVEYS, PHOTO DATE 09-23-2008 ARE INCLUDED IN THIS SURVEY.
7. DISC GOLF ALIGNMENT TO BE REVIEWED AND ADJUSTED BY CITY BEFORE BEING CONSTRUCTED AT NO ADDITIONAL CHARGE.
8. ANY NEW CONCRETE FLATWORK SHALL HAVE FORMS REVIEWED BY CITY REPRESENTATIVE PRIOR TO POURING CONCRETE.

SEE SHEET 15 FOR LAYOUT LEGEND

BUILDING DEPARTMENT SUBMITTAL

CITY OF SACRAMENTO
PARKS AND RECREATION DEPARTMENT
PARK, PLANNING, DESIGN & DEVELOPMENT
LANDSCAPE ARCHITECTURE SECTION
915 I STREET, 5TH FLOOR,
SACRAMENTO, CA 95814
McCLATCHY PARK - L19136500

McCLATCHY PARK RENOVATION
LAYOUT PLAN

LANDSCAPE ARCHITECT: BK
DESIGN BY/DRAWN BY: DW/JB
CAD FILE: 12.051
DATE: 7/26/13
SCALE:
CAD SCALE:
P.N.: L19136500
REVISIONS:

SHEET NO. 7 OF 52

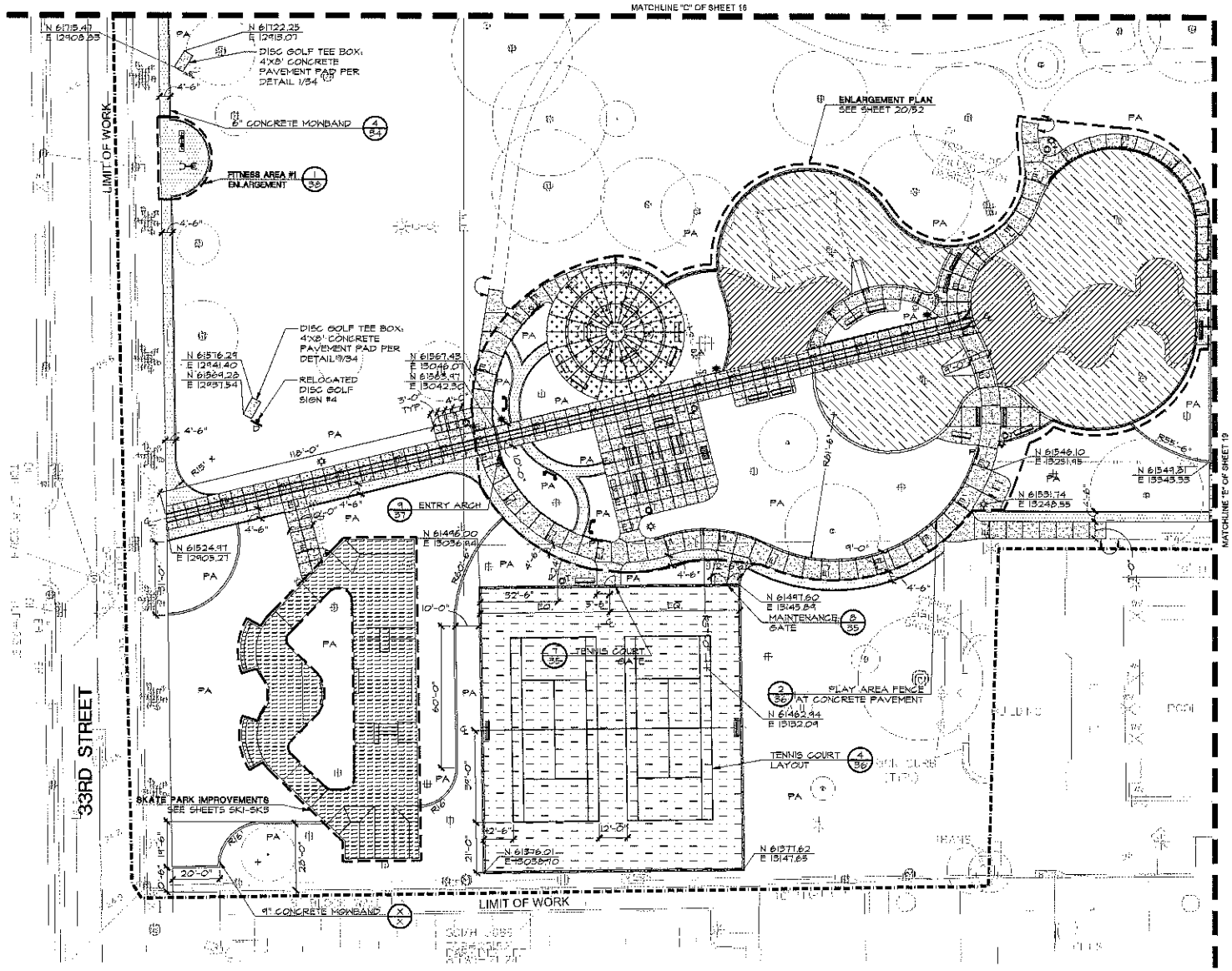

SEE SHEET 15 FOR LAYOUT LEGEND
SEE SHEET 17 FOR LAYOUT NOTES

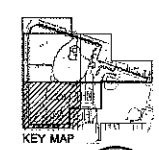

BUILDING DEPARTMENT SUBMITTAL

CITY OF SACRAMENTO
PARKS AND RECREATION DEPARTMENT
PARK, PLANNING, DESIGN, & DEVELOPMENT
LANDSCAPE ARCHITECTURE SECTION
915 I STREET, 5TH FLOOR,
SACRAMENTO, CA 95814

McCLATCHY PARK - L19136500

McCLATCHY PARK RENOVATION
LAYOUT PLAN

LANDSCAPE ARCHITECT: BW
DESIGN BY/DRAWN BY: DM/JB
CAD FILE: 12.051
DATE: 7/26/13
SCALE:
CAD SCALE:
P.N.: L19136500
REVISIONS

SHEET NO. 18 OF 52

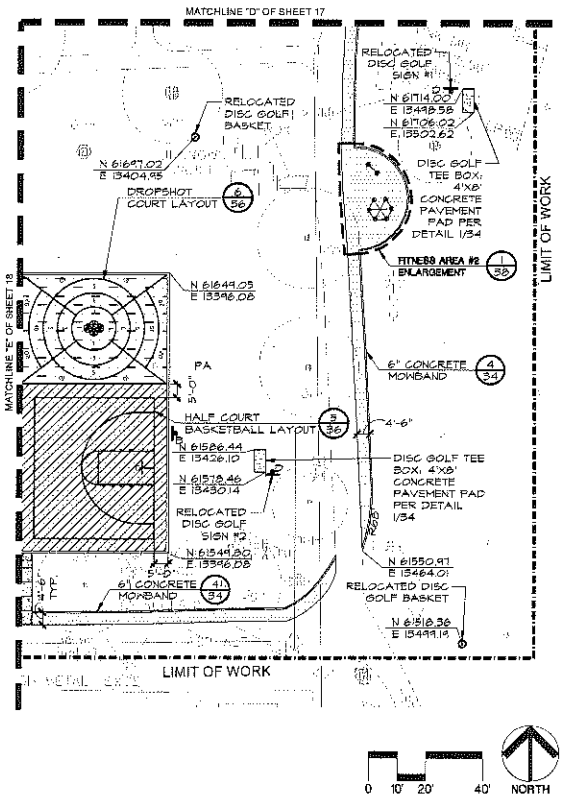

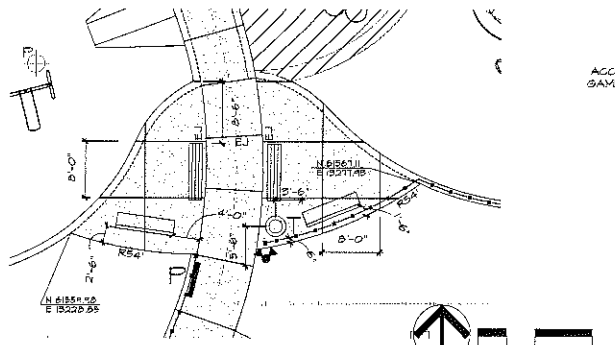

1/19 SWING / ADVENTURE SEATING AREA
ENLARGEMENT

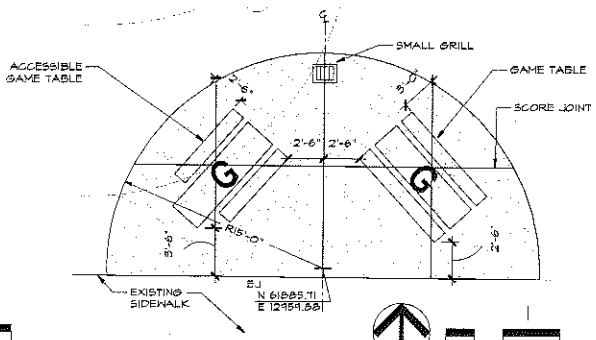

2/19 SMALL PICNIC AREA
ENLARGEMENT

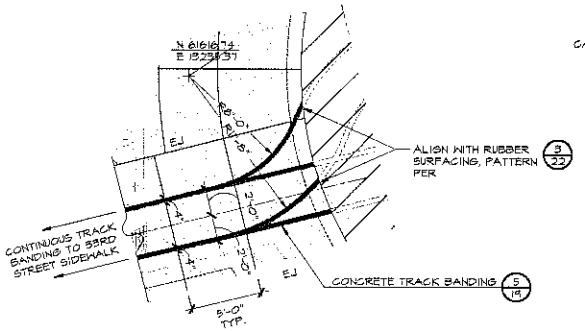

3/19 CONCRETE TRACK BANDING
ENLARGEMENT

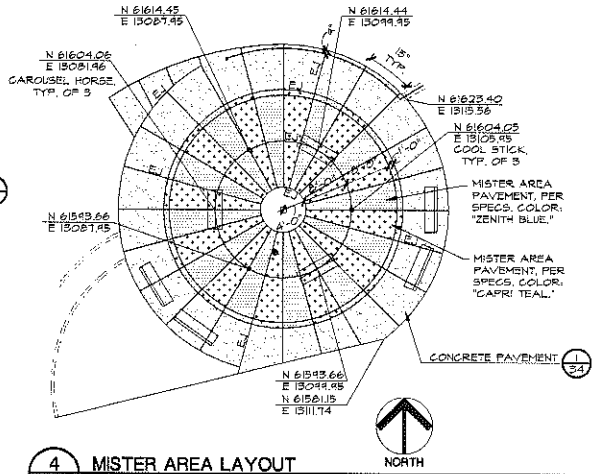

4/19 MISTER AREA LAYOUT
ENLARGEMENT

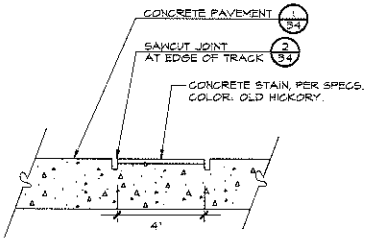

5/19 CONCRETE TRACK BANDING
N.T.S.

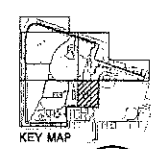

SEE SHEET 15 FOR LAYOUT LEGEND
SEE SHEET 17 FOR LAYOUT NOTES

811 Call before you dig. Callander Associates Landscape Architecture, Inc. CA PROJECT NO. 12.051

BUILDING DEPARTMENT SUBMITTAL

CITY OF SACRAMENTO
PARKS AND RECREATION DEPARTMENT
PARK, PLANNING, DESIGN, & DEVELOPMENT
LANDSCAPE ARCHITECTURE SECTION
915 I STREET, 5TH FLOOR,
SACRAMENTO, CA 95814
McCLATCHY PARK - L19136500

McCLATCHY PARK RENOVATION
LAYOUT PLAN

LANDSCAPE ARCHITECT: BW
DESIGN BY/DRAWN BY: DM/JB
CAD FILE: 12.051
DATE: 7/26/13
SCALE:
CAD SCALE:
P.N.: L19136500
REVISIONS:

SHEET NO. 19 OF 52

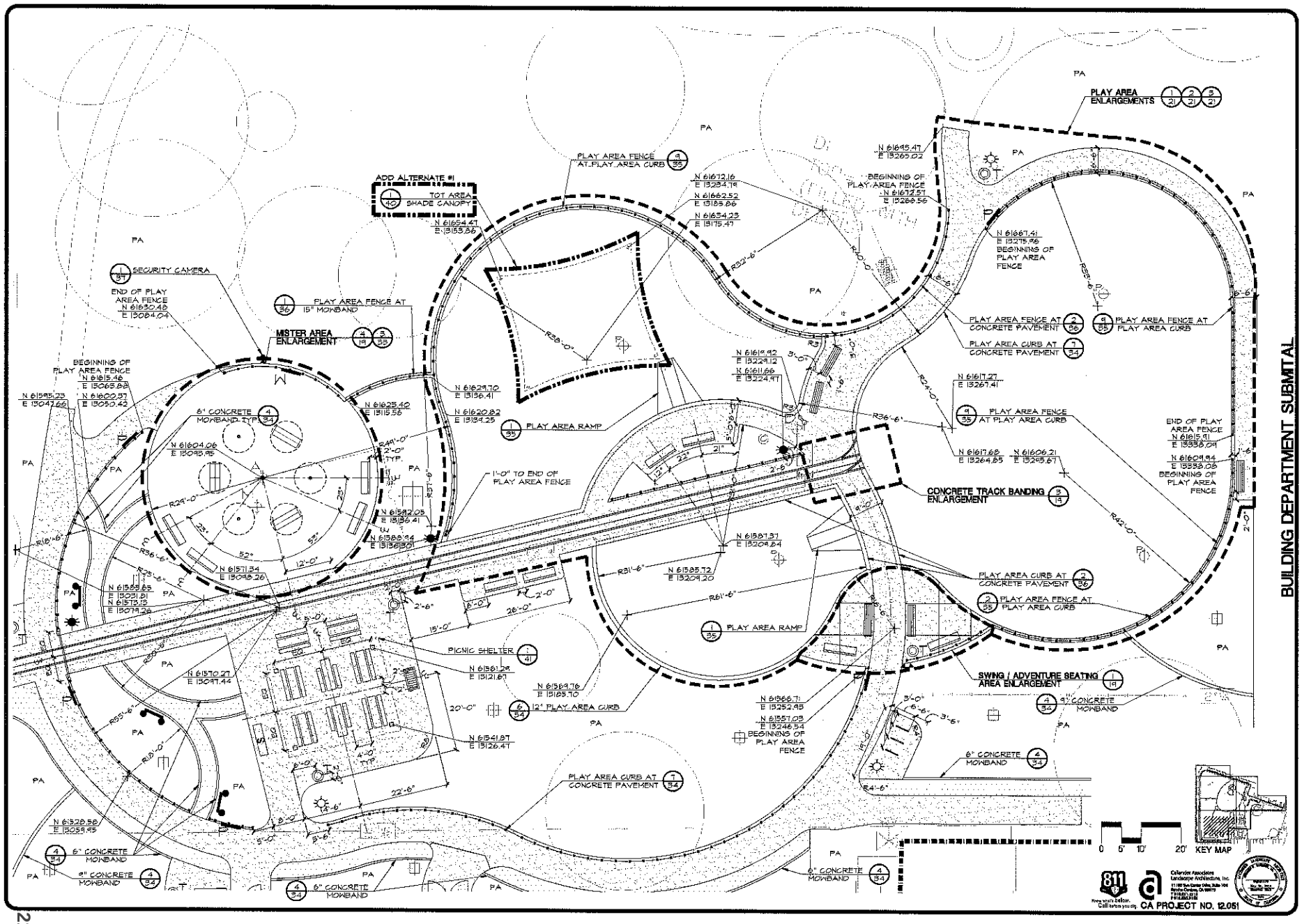

BUILDING DEPARTMENT SUBMITTAL

CITY OF SACRAMENTO
PARKS AND RECREATION DEPARTMENT
PARK PLANNING, DESIGN, & DEVELOPMENT
LANDSCAPE ARCHITECTURE SECTION
915 I STREET, 5TH FLOOR
SACRAMENTO, CA 95814

McCLATCHY PARK - L19136500

McCLATCHY PARK RENOVATION
ENLARGEMENT PLAN

LANDSCAPE ARCHITECT: BN
DESIGN BY/DRAWN BY: DM/JB
CAD FILE: 12.051
DATE: 7/26/13
SCALE:
CAD SCALE:
P.N. L19136500
REVISIONS

SHEET NO. 20 OF 52

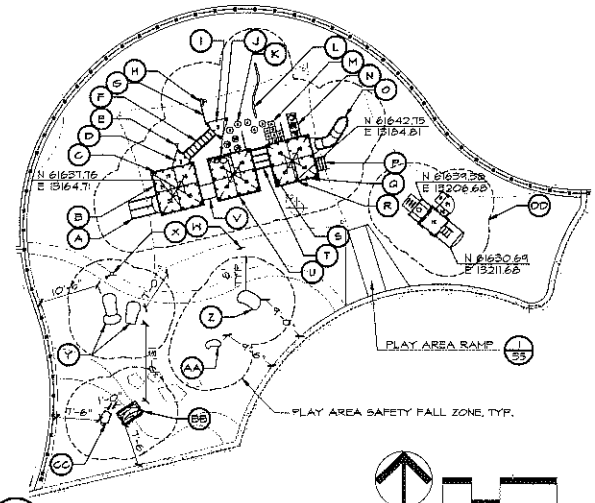

1/21 TOT AREA 2-5

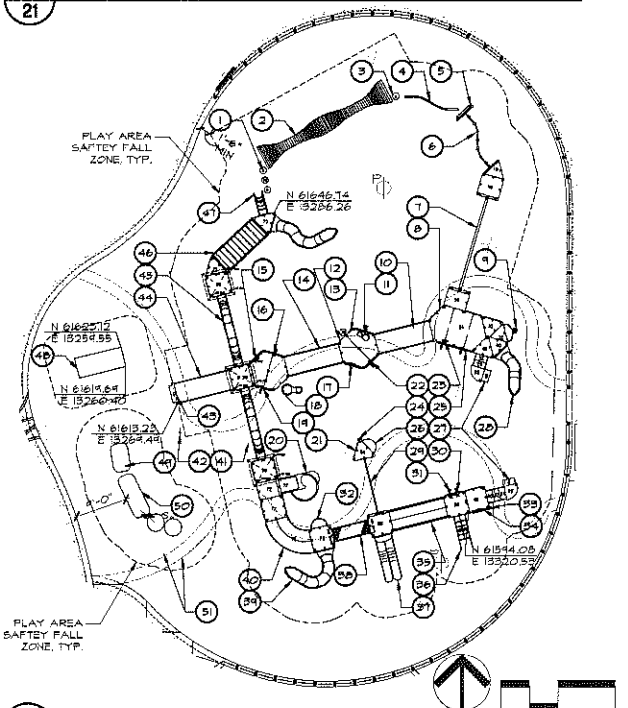

3/21 5-12 ADVENTURE PLAY AREA

PLAY EQUIPMENT LIST

TOT AREA STRUCTURE BY LANDSCAPE STRUCTURES: AVAILABLE THROUGH ROSS RECREATION, CHRIS TAIT (916) 483-3764.

- (A) DOUBLE POLY SLIDE (1)
- (B) COLOR SPLASH PANEL (1)
- (C) GRAB BAR (1)
- (D) ZOO PANEL (1)
- (E) TALK TUBE (1)
- (F) 2' STRAIGHT HORIZ LADDER (1)
- (G) CHINNING BAR (1)
- (H) ACCESSIBLE STATIONARY CYCLER (1)
- (I) PERM HANDHOLD PANELS (1)
- (J) BONGO PANEL (1)
- (K) POD CLIMBER WITH HANDLOOP AND HANDRAIL (2)
- (L) POD CLIMBER WITH 8" HEIGHT (5)
- (M) BLOCK CLIMBER (3)
- (N) ABC CLIMBER (1)
- (O) SLIDEWINDER 2 (1)
- (P) WIGGLE LADDER (1)
- (Q) ZOO INFILL PANEL (1)
- (R) CUSTOM FUNHOUSE FACADE WITH MAZE ENTRANCE (1)
- (S) WHEEL PANEL (1)
- (T) 42" ARCH BRIDGE (1)
- (U) CUSTOM FUNHOUSE FACADE WITH MAZE ENTRANCE (1)
- (V) 30" DIA. TUNNEL WITHOUT NO VIEW (1)
- (W) WELCOME SIGN (1)
- (X) TALK TUBE (1)

TOT AREA PRECAST INDEPENDANT PLAY ITEMS BY GEMROCK: AVAILABLE THROUGH MIRACLE PLAY SYSTEMS, BRIDGET MUCK (916) 311-0545.

- (Y) MOUNTAIN LION (2)
- (Z) BROWN BEAR LARGE (1)
- (AA) BROWN BEAR SMALL (1)
- (BB) HOLLOW LOG CRAWL (1)
- (CC) TORTOISE LARGE (1)

TOT AREA INDEPENDANT PLAY ITEM BY LANDSCAPE STRUCTURES: AVAILABLE THROUGH ROSS RECREATION, CHRIS TAIT (916) 483-3764.

- (DD) TRAIN CLIMBER (1)

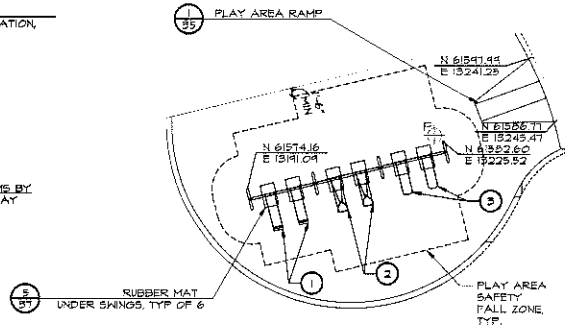

PLAY EQUIPMENT LIST

SWING BY LANDSCAPE STRUCTURES: AVAILABLE THROUGH ROSS RECREATION, CHRIS TAIT (916) 483-3764.

- (1) FULL BUCKET SEAT WITH CHAINLINK, 8' BEAM HEIGHT (2)
- (2) MOLDED BUCKET SEAT WITH CHAINLINK, 8'BEAM HEIGHT (2)
- (3) BELT SEAT WITH CHAINLINK, 8' BEAM HEIGHT (2)

2/21 SWING AREA

PLAY EQUIPMENT LIST

ADVENTURE AREA STRUCTURE BY LANDSCAPE STRUCTURES: AVAILABLE THROUGH ROSS RECREATION, CHRIS TAIT (916) 483-3764.

- (1) POD CLIMBER (3)
- (2) CUSTOM RECYCLED ARCH CLIMBER (1)
- (3) POD CLIMBER (1)
- (4) CURVED BALANCE BEAM (1)
- (5) PLAY STRUCTURE SEAT (1)
- (6) "5" RING BRIDGE, RIGHT DIRECTION WITH CROSSOVERS (1)
- (7) 18' TRACK RIDE (1)
- (8) PERM HANDHOLD PANEL (1)
- (9) CORKSCREW (1)
- (10) RAMP WITH GUARD RAIL AND CURBS (1)
- (11) BONGO REACH PANEL (1)
- (12) PERM HANDHOLD PANEL (1)
- (13) POD CLIMBER WITH PERM HANDHOLD (1)
- (14) RAMP WITH GUARD RAIL AND CURBS (1)
- (15) NAVIGATOR REACH PANEL (1)
- (16) MATCH 5 REACH PANEL (1)
- (17) RING-A-BELL REACH PANEL (1)
- (18) IND WOBBLE POD (1)
- (19) TRAIL TRACKER REACH PANEL (1)
- (20) 72" SPYRO SLIDE
- (21) VERT. ASCENT (1)
- (22) SOUND CHIMES REACH PANEL (1)
- (23) PERISCOPE REACH PANEL (1)
- (24) HAND HOLD LEG LIFT (1)
- (25) NAVIGATOR REACH PANEL (1)
- (26) BALCONY DECK (1)
- (27) RIGHT TRANSFER MODULE (2)
- (28) SLIDEWINDER 2 (1)
- (29) CANYON CLIMBER (1)
- (30) WHEEL PANEL (1)
- (31) KELEIDOSPIN PANEL AT GRADE (1)
- (32) BALCONY DECK (1)
- (33) HAND HOLD LEG LIFT (1)
- (34) FINGER MAZE PANEL (1)
- (35) ARCH BRIDGE WITH BARRIER (1)
- (36) WAVY WEB (1)
- (37) DOUBLE POLY WAVE SLIDE (1)
- (38) GRID WALK WITH BARRIERS (1)
- (39) SLIDEWINDER 2 (1)
- (40) 90 DEGREE CURVE BRIDGE
- (41) CUSTOM ROLLER COASTER CLIMBER (1)
- (42) WELCOME SIGN (1)
- (43) CONCRETE RAMP BERM EXIT PLATE (1)
- (44) RAMP WITH GUARDRAIL AND CURB (1)
- (45) CUSTOM ROLLER COASTER CLIMBER (1)
- (46) CLATTER BRIDGE WITH BARRIERS (1)
- (47) LOOP ARCH (1)

ADVENTURE AREA INDEPENDANT ITEMS BY LANDSCAPE STRUCTURES: AVAILABLE THROUGH ROSS RECREATION, CHRIS TAIT (916) 483-3764.

- (48) TROLLEY CLIMBER (1)

ADVENTURE AREA PRECAST INDEPENDANT PLAY ITEMS BY GEMROCK: AVAILABLE THROUGH MIRACLE PLAY SYSTEMS, BRIDGET MUCK (916) 311-0545.

- (49) ICE CREAM CLIMBER (1)
- (50) POP CORN CLIMBER (1)
- (51) CANDY APPLE CLIMBER (2)

PLAY EQUIPMENT NOTES:

1. ALL PLAY STRUCTURE AREAS TO BE SECURED BY TEMPORARY FENCING WITH LOCKS UNTIL ACCEPTED BY THE PLAYGROUND SAFETY INSPECTOR.
2. ALL DIMENSIONS ARE TO EDGE OF CONCRETE FLATWORK, FACE OF CURB OR CENTERLINE OF POST.
3. ALL DECK HEIGHTS ARE MEASURED FROM TOP OF RESILIENT SURFACE FINISHED GRADE, AND ARE IDENTIFIED BY THE TEXT SHOWING THE DECK HEIGHT, I.E. 48 REPRESENTS A 48 INCH DECK HEIGHT.
4. THE PARTS LISTED IN THE PLAY EQUIPMENT LIST REPRESENT A PARTIAL LIST OF PARTS NECESSARY TO CONSTRUCT THE PLAY EQUIPMENT. THE MANUFACTURER SHALL SUPPLY ALL PARTS, FITTINGS, COMPONENTS AND HARDWARE AS REQUIRED TO COMPLETELY CONSTRUCT THE PLAY STRUCTURES AND COMPLY WITH SAFETY, LIABILITY, AND WARRANTY REQUIREMENTS.
5. WOOD FIBER SHALL HAVE A MINIMUM 12" DEPTH AT THE EDGES OF THE PLAY AREA, DEEPER IN THE CENTER OF THE PLAY AREA AND OVER PLAY AREA DRAINS. TOP OF WOOD FIBER TO BE LEVEL AND COMPACTED. WOOD FIBER SHALL BE INSTALLED WITHIN FORTY-EIGHT HOURS AFTER NEW PLAY EQUIPMENT AND SWINGS ARE INSTALLED TO PREVENT INJURY TO CHILDREN USING THE PLAY EQUIPMENT.
6. PLAY EQUIPMENT SHALL BE INSPECTED BY A CERTIFIED PLAYGROUND INSPECTOR. CITY PLAYGROUND INSPECTOR: DAVID ROBBINS. PH: 869-8445. CALL 48 HOURS PRIOR TO FOOTING LAYOUT AND AT FINAL CONSTRUCTION.

KEY MAP

811 Know what's below. Call before you dig.

Callander Associates Landscape Architecture, Inc.
11180 Sun Center Drive, Suite 104
Rancho Cordova, CA 95670
P (916) 361-1312
F (916) 361-8732

CA PROJECT NO. 12.051

BUILDING DEPARTMENT SUBMITTAL

CITY OF SACRAMENTO
PARKS AND RECREATION DEPARTMENT
PARK, PLANNING, DESIGN & DEVELOPMENT
LANDSCAPE ARCHITECTURE SECTION
915 I STREET, 5TH FLOOR,
SACRAMENTO, CA 95814

MCCLATCHY PARK - L19136500

McCLATCHY PARK RENOVATION
ENLARGEMENT PLAN

LANDSCAPE ARCHITECT: BH
DESIGN BY/DRAWN BY: DMJB
CAD FILE: 12.051
DATE: 7/26/13
SCALE:
CAD SCALE:
P.N.: L19136500
REVISIONS

SHEET NO. 21 OF 52

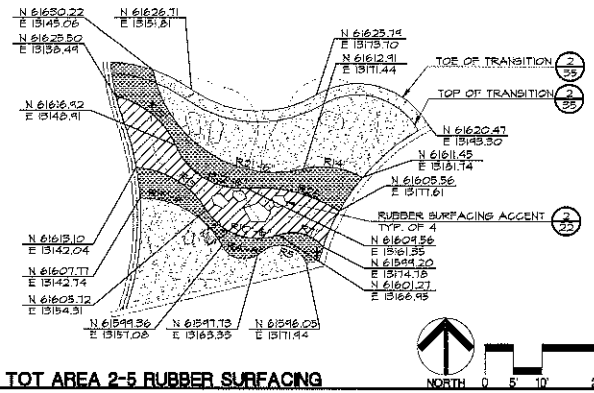

1/22 TOT AREA 2-5 RUBBER SURFACING

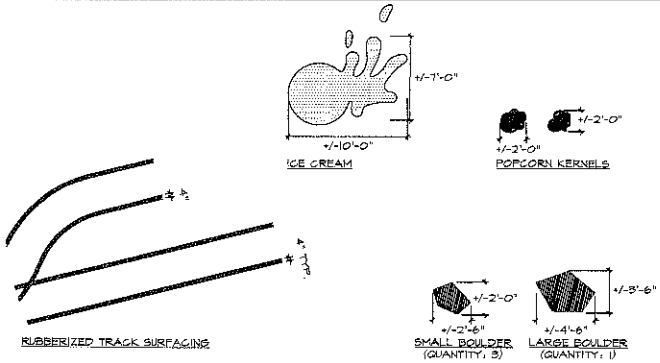

NOTE: CONTRACTOR TO LAYOUT RUBBER SURFACING ACCENTS AS SHOWN ON PLANS. FINAL LOCATION TO BE APPROVED BY LANDSCAPE ARCHITECT PRIOR TO INSTALLATION. LANDSCAPE ARCHITECT TO PROVIDE PAPER TEMPLATES.

2/22 RUBBER SURFACING ACCENTS N.T.S.

PLAY AREA RUBBER SURFACING COLORS

- BEIGE
- BLUE
- 75% GREEN, 25% YELLOW
- ORANGE
- POPCORN KERNELS - YELLOW
- POPCORN KERNELS - WHITE
- BOULDERS - GREY
- ICE CREAM - MID-BROWN

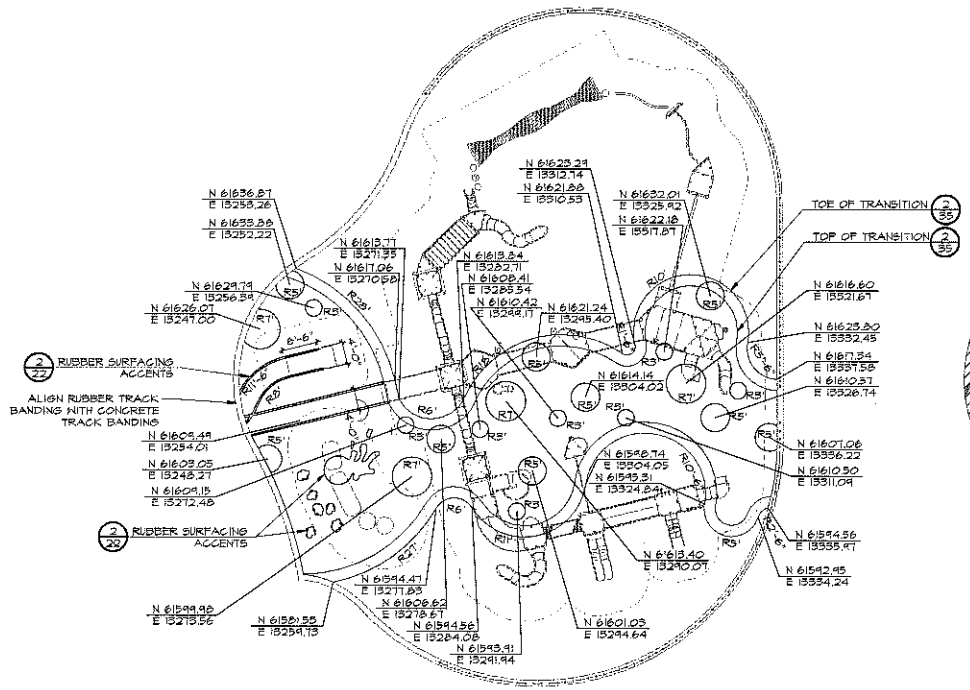

3/22 5-12 ADVENTURE PLAY AREA SURFACING LAYOUT

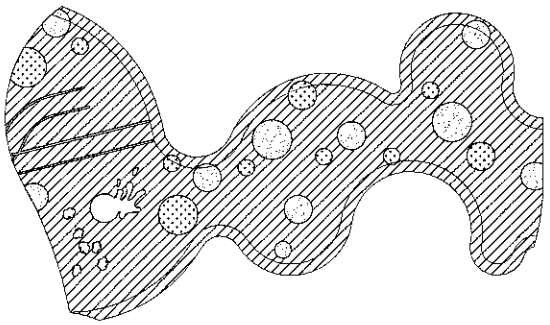

NOTE: CONTRACTOR TO LAYOUT RUBBER SURFACING ACCENTS AS SHOWN ON PLANS. FINAL LOCATION TO BE APPROVED BY LANDSCAPE ARCHITECT PRIOR TO INSTALLATION. LANDSCAPE ARCHITECT TO PROVIDE PAPER TEMPLATES.

4/22 5-12 ADVENTURE PLAY AREA SURFACING

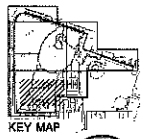

KEY MAP

811 Know what's below. Call before you dig.

Callander Associates Landscape Architecture, Inc.
1114 Main Avenue Otay, Suite 104
Santee, California 92071
T 619.661.1813
F 619.562.1811

CA PROJECT NO. 12,051

BUILDING DEPARTMENT SUBMITTAL

CITY OF SACRAMENTO
PARKS AND RECREATION DEPARTMENT
PARK, PLANNING, DESIGN, & DEVELOPMENT
LANDSCAPE ARCHITECTURE SECTION
915 I STREET, 5TH FLOOR,
SACRAMENTO, CA 95814

McCLATCHY PARK - L19136500

McCLATCHY PARK RENOVATION
ENLARGEMENT PLAN

LANDSCAPE ARCHITECT: BH
DESIGN BY/DRAWN BY: DM/JB
CAD FILE: 12,051
DATE: 7/26/13
SCALE:
CAD SCALE:
P.N.: L19136500
REVISIONS:

SHEET NO. 22 OF 52

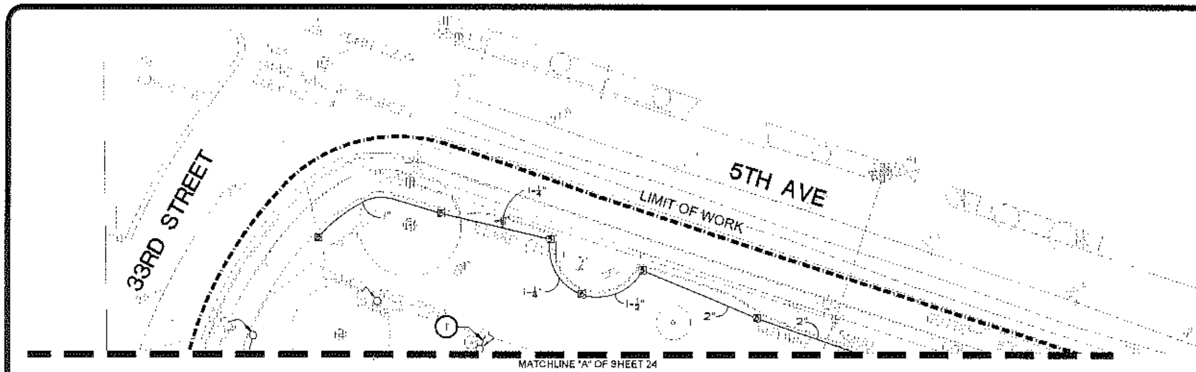

IRRIGATION NOTES

1. IRRIGATION WIRE AND VALVE LOCATION VERIFICATION: EXISTING EQUIPMENT IS SHOWN SCREENED BACK ON PLANS. THE INFORMATION SHOWN IS TAKEN FROM AS-BUILT DRAWINGS AND WILL NOT REFLECT WHAT IS FOUND IN THE FIELD. BEFORE DEMOLITION WORK IS STARTED THE CONTRACTOR SHALL USE APPROPRIATE IRRIGATION TRACING EQUIPMENT TO TRACE THE LOCATION AND ROUTING OF ALL IRRIGATION WIRES AND VALVES ON THE EAST HALF OF THE PARK; STATIONS 18-48 ON CONTROLLER B AND STATIONS 1-10 ON CONTROLLER A. THESE LOCATIONS SHALL BE ACCURATELY SHOWN ON A DRAWING BY CONTRACTOR AND SUBMITTED TO THE CITY FOR REVIEW AND VERIFICATION. VALVE LOCATIONS, WIRE LOCATIONS, AND WIRE BREAK LOCATIONS SHALL BE INDICATED BY STATION NUMBER AS SHOWN ON THE CONTROLLERS. THE DESIGN AND ROUTING SHOWN ON THE PLAN MAY BE MODIFIED TO REFLECT EXISTING CONDITIONS WITH THE APPROVAL OF THE CITY. NO TRENCHING SHALL COMMENCE UNTIL THE SYSTEM IS LOCATED AND VERIFIED.

   VALVES B19, B21, B23, AND B45 ARE NOT OPERATIONAL. CONTRACTOR SHALL TRACE, LOCATE, DIG UP, AND PUT BACK INTO OPERATIONAL ORDER OR VERIFY THAT THE VALVES CAN BE REUSED FOR THE NEW DESIGN IN AREAS THAT ARE BEING MODIFIED.

   STATION B28 OPERATES TWO VALVES AND STATIONS B36 AND B37 MAY HAVE AN "ADD-A-VALVE" INSTALLED. CONTRACTOR TO VERIFY AND MODIFY AS NECESSARY FOR NEW IRRIGATION IMPROVEMENTS SHOWN. REMOVE THE "ADD-A-VALVE" AND INSTALL NEW CONTROL WIRES FOR THAT VALVE.

2. HEAD LOCATIONS: EXISTING HEAD LOCATIONS ARE TAKEN FROM THE AS-BUILTS AND ARE SHOWN SCREENED BACK ON THE BASE. THESE LOCATIONS ARE NOT ACCURATE AND CONTRACTOR TO MAKE ADJUSTMENTS AS NECESSARY TO ACCOMMODATE THE ACTUAL AS-BUILT CONDITIONS IN THE FIELD. THE FUTURE PROJECT AREA SHALL HAVE HEAD TO HEAD COVERAGE AT THE COMPLETION OF THE JOB.
3. TRENCH REPAIR: CONTRACTOR TO REPLACE ALL TURF, ASPHALT, PAVEMENT, OR OTHER SURFACES DAMAGED AS A RESULT OF TRENCHING. CONTRACTOR TO BE EXTREMELY CAUTIOUS TO AVOID TRENCHING THROUGH EXISTING CONTROL WIRES , LATERAL LINES AND MAINLINE. STAKE IN FIELD THE LOCATIONS PER NOTE 1 BEFORE TRENCHING. ALL DAMAGED LATERAL LINES, MAINLINES, CONTROL WIRES OR OTHER EXISTING IMPROVEMENTS SHALL BE REPAIRED TO THE SATISFACTION OF THE CITY AT NO ADDITIONAL COST.
4. SPECIFICATIONS: SEE IRRIGATION SPECIFICATIONS FOR ADDITIONAL INFORMATION.
5. VERIFICATION: SYSTEM DESIGN IS BASED ON 100 P.S.I. AND 465 G.P.M. AVAILABLE AT DISCHARGE OUTLET OF BOOSTER PUMP. CONTRACTOR SHALL VERIFY SAME AND NOTIFY LANDSCAPE ARCHITECT IF SUCH DATA ADVERSELY AFFECTS THE OPERATION OF THE SYSTEM. SUCH NOTICE SHALL BE MADE IN WRITING AND PRIOR TO COMMENCING ANY IRRIGATION WORK.
6. UTILITIES: CONTRACTOR SHALL VERIFY LOCATION OF ALL ON-SITE UTILITIES. RESTORATION OF DAMAGED UTILITIES SHALL BE MADE AT THE CONTRACTOR'S EXPENSE TO THE SATISFACTION OF THE CITY.
7. LAYOUT: THE IRRIGATION CONTRACTOR SHALL LAYOUT ALL WORK PRIOR TO TRENCHING OPERATIONS TO DETERMINE IF MINOR MODIFICATIONS WILL BE REQUIRED. PLANTING CONTRACTOR SHALL STAKE TREE LOCATIONS PRIOR TO IRRIGATION LATERAL INSTALLATION.
8. SCHEMATIC: SYSTEM FEATURES ARE SHOWN SCHEMATICALLY FOR GRAPHIC CLARITY. INSTALL ALL PIPING AND VALVES IN COMMON TRENCHES WHERE FEASIBLE AND INSIDE PLANTING AREAS WHENEVER POSSIBLE. ALL VALVES SHALL BE LOCATED IN GROUNDCOVER OR SHRUB AREAS WHENEVER POSSIBLE.
9. CODES: IRRIGATION SYSTEM SHALL BE INSTALLED IN ACCORDANCE WITH ALL LOCAL CODES AND MANUFACTURER'S SPECIFICATIONS. NOTIFY CITY BY TELEPHONE AND IN WRITING OF ANY CONFLICTS PRIOR TO INSTALLATION.
10. SLEEVING: CONTRACTOR SHALL INSTALL ALL PIPING UNDER PAVING IN SEPARATE SCH. 40 SLEEVES. SLEEVES SHALL BE ADEQUATELY SIZED AND INSTALLED AT 24" MIN. DEPTH BELOW GRADE WITH SAND BACKFILL 6" ABOVE AND 4" BELOW SLEEVE PRIOR TO PAVEMENT CONSTRUCTION. ALL WIRING SHALL BE INSTALLED IN SCH. 40 ELECTRICAL CONDUIT. SLEEVING SHALL EXTEND 1'-0" FROM EDGE OF PAVEMENT INTO LAWN OR PLANTING AREA, AND SHALL HAVE ENDS CLEARLY MARKED ABOVE GRADE.
11. BORING: CONTRACTOR TO BORE UNDER PAVEMENT AS NECESSARY.
12. QUICK COUPLING VALVES: INSTALL ON TRIPLE SWING JOINT. LOCATE 12" AWAY FROM EDGE OF WALKS, WALLS, CURBS, AND HEADERBOARDS WITHIN PLANTING AREAS. PROVIDE OWNER WITH ONE OPERATING KEY, TWO SETS OF LOCKING COVER KEYS, AND ONE SWIVEL HOSE ELL.
13. HEAD ALLOWANCE: CONTRACTOR SHALL ALLOW IN BID PRICE AN AMOUNT SUFFICIENT TO PROVIDE AND INSTALL AN ADDITIONAL 5 SPRINKLER HEADS OF EACH TYPE SPECIFIED ON PLAN TO ACCOMMODATE FIELD CHANGES. THESE HEADS SHALL BE LOCATED AS DIRECTED BY THE LANDSCAPE ARCHITECT. CONTRACTOR SHALL DELIVER TO THE CITY ANY UN-USED ADDITIONAL HEADS AT THE END OF THE MAINTENANCE PERIOD.
14. IRRIGATION INTERUPTION: SHOULD THE EXISTING MAINLINE BREAK OR BE SHUT OFF FOR ANY REASON DURING THE COURSE OF CONSTRUCTION THE CONTRACTOR SHALL HAND WATER ALL TREES, SHRUBS, TURF, AND GROUNDCOVER THAT THE EXISTING IRRIGATION SYSTEM WATERS. THE CONTRACTOR SHALL CONTINUE TO DO SO UNTIL THE IRRIGATION SYSTEM IS OPERABLE. ANY ITEMS (INCLUDING TREES, SHRUBS, TURF, AND IRRIGATION COMPONENTS) THAT DIE OR BECOME DAMAGED DUE TO CONSTRUCTION ACTIVITIES AND/OR LACK OF WATER WILL BE REPLACED BY THE CONTRACTOR AT THE CONTRACTOR'S EXPENSE TO THE SATISFACTION OF THE CITY.
15. SPLICE BOXES AND CONTROL WIRES: INSTALL SPLICE BOXES AS SHOWN AND WHEREVER SPLICED ARE MADE IN THE IRRIGATION CONTROL WIRES. CONTROL WIRES SHALL BE COLOR CODED AS FOLLOWS: FULL CIRCLE ROTORS: BLUE. ADJUSTED ROTORS: RED. ROTARY SPRAYS: GREEN. TREE BUBBLERS: BROWN.
16. EXISTING TREES: CONTRACTOR SHALL TAKE EXTREME CARE WHEN TRENCHING UNDER EXISTING TREES. NO ROOTS OVER 2" SHALL BE CUT AND TRENCHING SHALL BE DONE BY HAND UNDER DRIPLINE OF EXISTING TREE.
17. RISERS: SPRINKLER HEADS IN TURF AREA SHALL HAVE 6" POP-UPS, SPRINKLER HEADS IN PLANTER AREAS SHALL HAVE 12" POP-UPS.
18. MAINLINE: MAINLINE SHALL BE SOLVENT WELD WITH SCH. 80 NIPPLES AND FITTINGS. USE WELD-ON P-70 PRIMER AND WELD-ON 711 INDUSTRIAL GRADE GREY. THRUST BLOCKS SHALL BE PROVIDED AT ALL CHANGES IN PIPE DIRECTION PER CITY STANDARDS. NEW MAINLINE SHALL BE PRESSURE TESTED AT 150 PSI FOR TWO HOURS WITH ZERO PRESSURE LOSS. PRESSURE TEST SHALL BE PERFORMED WITH THE CONSTRUCTION INSPECTOR ON SITE AND SHALL BE DONE BEFORE RCV'S ARE INSTALLED. EXISTING MAINLINE SHALL NOT BE INCLUDED IN PRESSURE TEST.
19. TAGS: PROVIDE STATION IDENTIFICATION TAGS ON ALL NEW VALVES. TAG NUMBER TO MATCH STATION NUMBER ON CLOCK.
20. IRRIGATION COVERAGE TEST: IRRIGATION COVERAGE TEST SHALL BE DONE WITH THE CITY AFTER ALL HEADS ARE INSTALLED AND PRIOR TO INSTALLATION OF PLANTS AND TURF.
21. AUDIT: THE CONTRACTOR SHALL HAVE THE IRRIGATION AUDITED BY A CERTIFIED IRRIGATION AUDITOR. THE APPROVED IRRIGATION AUDIT AND A CERTIFICATE OF COMPLETION SHALL BE COMPLETED AS OUTLINED IN THE SPECIFICATIONS AND CITY CODE SECTION 15.92.

I HAVE COMPLIED WITH THE CRITERIA OF THE MODEL WATER EFFICIENT LANDSCAPE ORDINANCE AND APPLIED THEM ACCORDINGLY FOR THE EFFICIENT USE OF WATER IN THE IRRIGATION DESIGN PLAN.

SIGNATURE ____________ BENJAMIN W. WOODSIDE

IRRIGATION LEGEND

- TURF ROTOR, HUNTER I-25-06 ROTOR, NOZZLE AS INDICATED, 60 PSI, SPACING AS SHOWN, ARC AS REQUIRED (6/27)
- ROTARY SPRAY, HUNTER PROS-XX-PRS40-CU-MP1000 ON HUNTER PRO-SPRAY BODY, 40 PSI, SPACING AS SHOWN, ARC AS REQUIRED
- ROTARY SPRAY, HUNTER PROS-XX-PRS40-CU-MP2000 ON HUNTER PRO-SPRAY BODY, 40 PSI, SPACING AS SHOWN, ARC AS REQUIRED
- ROTARY SPRAY, HUNTER PROS-XX-PRS40-CU-MP3000 ON HUNTER PRO-SPRAY BODY, 40 PSI, SPACING AS SHOWN, ARC AS REQUIRED
- ROTARY CORNER STRIP, HUNTER PROS-XX-PRS40-CU-MPL(OR'R')- CS515, MP CORNER STRIP ON HUNTER PRO-SPRAY BODY, 40 PSI, SPACING AS SHOWN, ARC AS REQUIRED.
- ROTARY SIDE STRIP, HUNTER PROS-XX-PRS40-CU-MP5SS30, SIDE STRIP ON HUNTER PRO-SPRAY BODY, 40 PSI, SPACING AS SHOWN, ARC AS REQUIRED. (7/27)
- EXISTING IRRIGATION HEAD TO BE RELOCATED AS SHOWN. MAINTAIN HEAD TO HEAD COVERAGE AND DO NOT OVERSPRAY ON DECOMPOSED GRANITE PATH AND EXERCISE STATIONS.
- TREE BUBBLER, HUNTER RZWS-18-50-CV, 30 PSI, INSTALL 2 PER SYMBOL PER MANUFACTURER'S RECOMMENDATIONS. (2/39)
- IRRIGATION BACKFLOW PREVENTER: EXISTING 4" BACKFLOW PREVENTER IN ENCLOSURE.
- BOOSTER PUMP ASSEMBLY: EXISTING 25 HP CUSTOM PUMP BOOSTER PUMP PACKAGE. DELIVERS 465 GPM WITH 70 PSI BOOST.
- IRRIGATION CONTROLLER B: EXISTING 48 STATION RAINMASTER DX2 CENTRAL CONTROL CONTROLLER.
- IRRIGATION CONTROLLER A: EXISTING 12 STATION RAINMASTER DX2 CENTRAL CONTROL CONTROLLER. PROVIDE (2) 12-STATION OUTPUT BOARDS, MODEL DX-UPGD-12-36. INCREASE THE CONTROLLER FROM 12 STATION TO 36 STATION CONTROLLER. INSTALL PER MANUFACTURER'S SPECIFICATIONS. (1/25)
- REMOTE CONTROL VALVE: HUNTER IBV-AS-ADJ BRASS VALVE. SIZE PER PLAN. EITHER REUSED EXISTING OR NEW VALVE AS APPROVED. SET PRESSURE FOR PROPER HEAD PERFORMANCE. (4/27)
- EXISTING REMOTE CONTROL VALVE: PROTECT IN PLACE
- SPLICE BOX, PER SPECS
- MAINLINE: 24" MIN. BURIAL PER SPECS. CONTRACTOR SHALL INSTALL THRUST BLOCKS PER CITY OF SACRAMENTO STANDARD SPECIFICATIONS AND PLANS. MAINLINE SIZE SHALL BE 4" UNLESS SHOWN ON PLANS MAINLINE SHALL BE CLASS 315. (1/27)
- EXISTING MAINLINE, SIZE AS SHOWN. DO NOT PRESSURE TEST EXISTING MAINLINE.
- LATERAL: CLASS 200 PVC, 18" MIN. BURIAL PER SPECS, SIZE PER PLAN. (1/27)
- CONTROLLER WIRES: ONLY SHOWN WHERE NOT LOCATED AT EXISTING/NEW MAINLINES. CONTRACTOR TO PROVIDE WIRES TO ALL VALVES FROM CONTROLLER. (1/27)
- SLEEVE: SCH 40 PVC, SIZE AS REQUIRED
- QUICK COUPLING VALVE: HUNTER, HQ-5RC (5/27)
- GATE VALVE:NIBCO F-619-RW-SON FLANGED (3/27)
- 6A / LOW / 2" / 35 / 1.70 — VALVE NUMBER AND WATER USE DESIGNATION; VALVE SIZE; APPROXIMATE GPM THROUGH VALVE; PRECIPITATION RATE
- EXISTING HEAD LOCATIONS ARE NOT SHOWN. CONTRACTOR TO VERIFY LOCATIONS AND ADJUST HEADS AND LATERALS FOR NEW DECOMPOSED GRANITE PATH. PROVIDE HEAD TO HEAD COVERAGE WITHOUT OVERSPRAY ONTO PATH. THE FIRST TWO ROWS OF HEADS SHOULD BE ADJUSTED.

IRRIGATION KEY

1. CONNECT NEW LATERAL TO EXISTING SYSTEM, TYP.
2. BORE UNDER EXISTING CONCRETE PAVEMENT, TYP.
3. AS-BUILT HEAD LOCATIONS ARE INCORRECT. RELOCATE HEADS AS NECESSARY TO BE OUTSIDE OF NEW DECOMPOSED GRANITE PATH AND PROVIDE HEAD TO HEAD COVERAGE. OVERSPRAY ON DECOMPOSED GRANITE PATH IS ALLOWED IN THIS AREA ONLY.
4. CONNECT NEW VALVE TO EXISTING MAINLINE, TYP.
5. ADJUST ROTOR LOCATIONS IF NEEDED TO KEEP FROM OVERSPRAYING ON PLAYGROUND AND COURTS, TYP.

KEY MAP

0 10' 20' 40' NORTH

Callander Associates Landscape Architecture, Inc.

CA PROJECT NO. 12.051

BUILDING DEPARTMENT SUBMITTAL

CITY OF SACRAMENTO
PARKS AND RECREATION DEPARTMENT
PARK, PLANNING, DESIGN, & DEVELOPMENT
LANDSCAPE ARCHITECTURE SECTION
915 I STREET, 5TH FLOOR,
SACRAMENTO, CA 95814

McCLATCHY PARK - L19136500

McCLATCHY PARK RENOVATION
IRRIGATION PLAN

LANDSCAPE ARCHITECT: BW
DESIGN BY/DRAWN BY: BW/BC
CAD FILE: 12.051
DATE: 7/26/13
SCALE:
CAD SCALE:
P.N.: L19136500
REVISIONS

SHEET NO. 23 OF 52

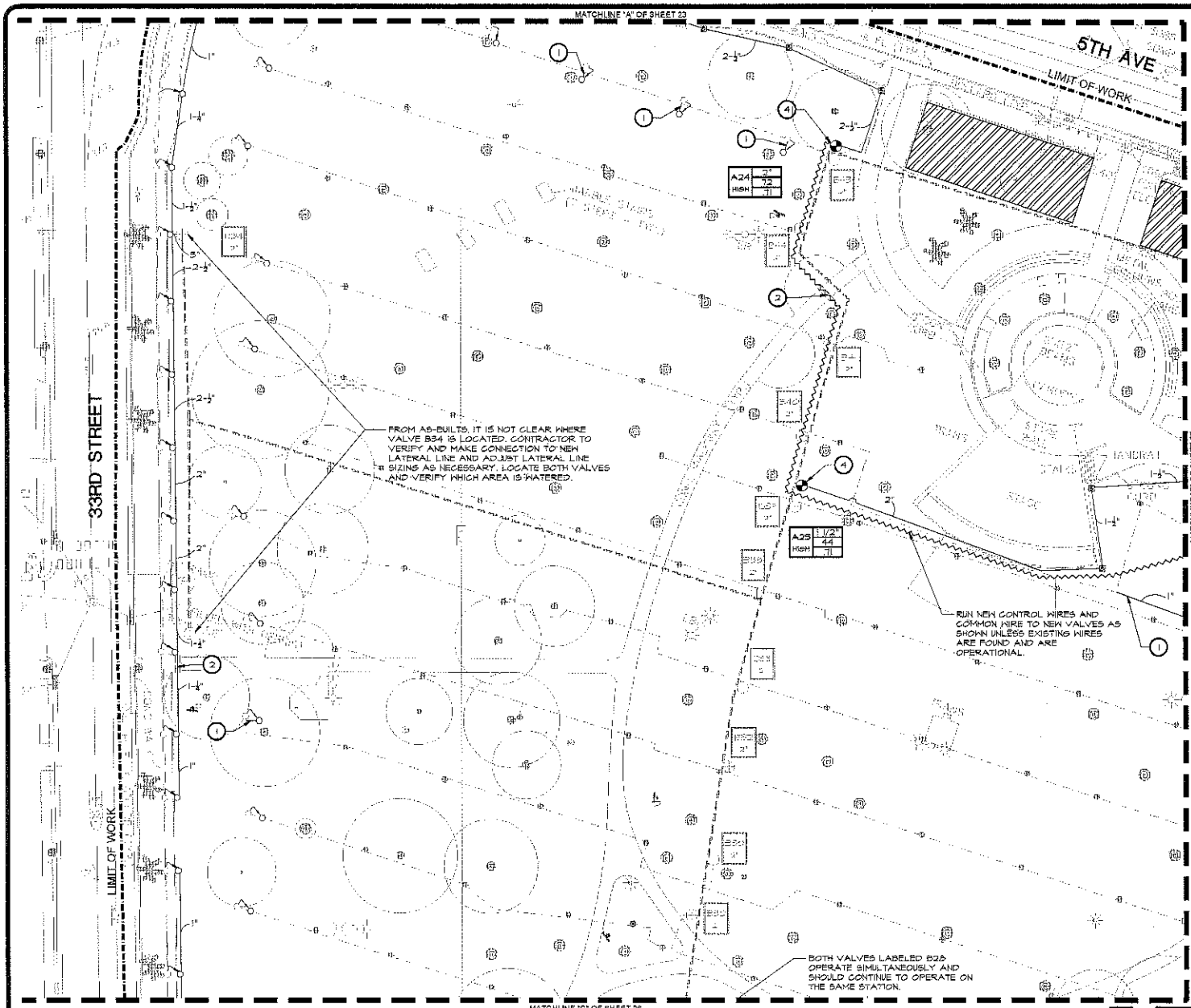

SEE SHEET 23 FOR IRRIGATION NOTES AND LEGEND

I HAVE COMPLIED WITH THE CRITERIA OF THE MODEL WATER EFFICIENT LANDSCAPE ORDINANCE AND APPLIED THEM ACCORDINGLY FOR THE EFFICIENT USE OF WATER IN THE IRRIGATION DESIGN PLAN.

BENJAMIN W. WOODSIDE

SIGNATURE

KEY MAP

Callander Associates Landscape Architecture, Inc.

CA PROJECT NO. 12.051

BUILDING DEPARTMENT SUBMITTAL

CITY OF SACRAMENTO
PARKS AND RECREATION DEPARTMENT
PARK, PLANNING, DESIGN, & DEVELOPMENT
LANDSCAPE ARCHITECTURE SECTION
915 I STREET, 5TH FLOOR,
SACRAMENTO, CA 95814

McCLATCHY PARK - L19136500

McCLATCHY PARK RENOVATION
IRRIGATION PLAN

LANDSCAPE ARCHITECT BW
DESIGN BY/DRAWN BY DM/BC
CAD FILE 12.051
DATE 7/26/13
SCALE
CAD SCALE
P.N. L19136500
REVISIONS

SHEET NO. 24 OF 52

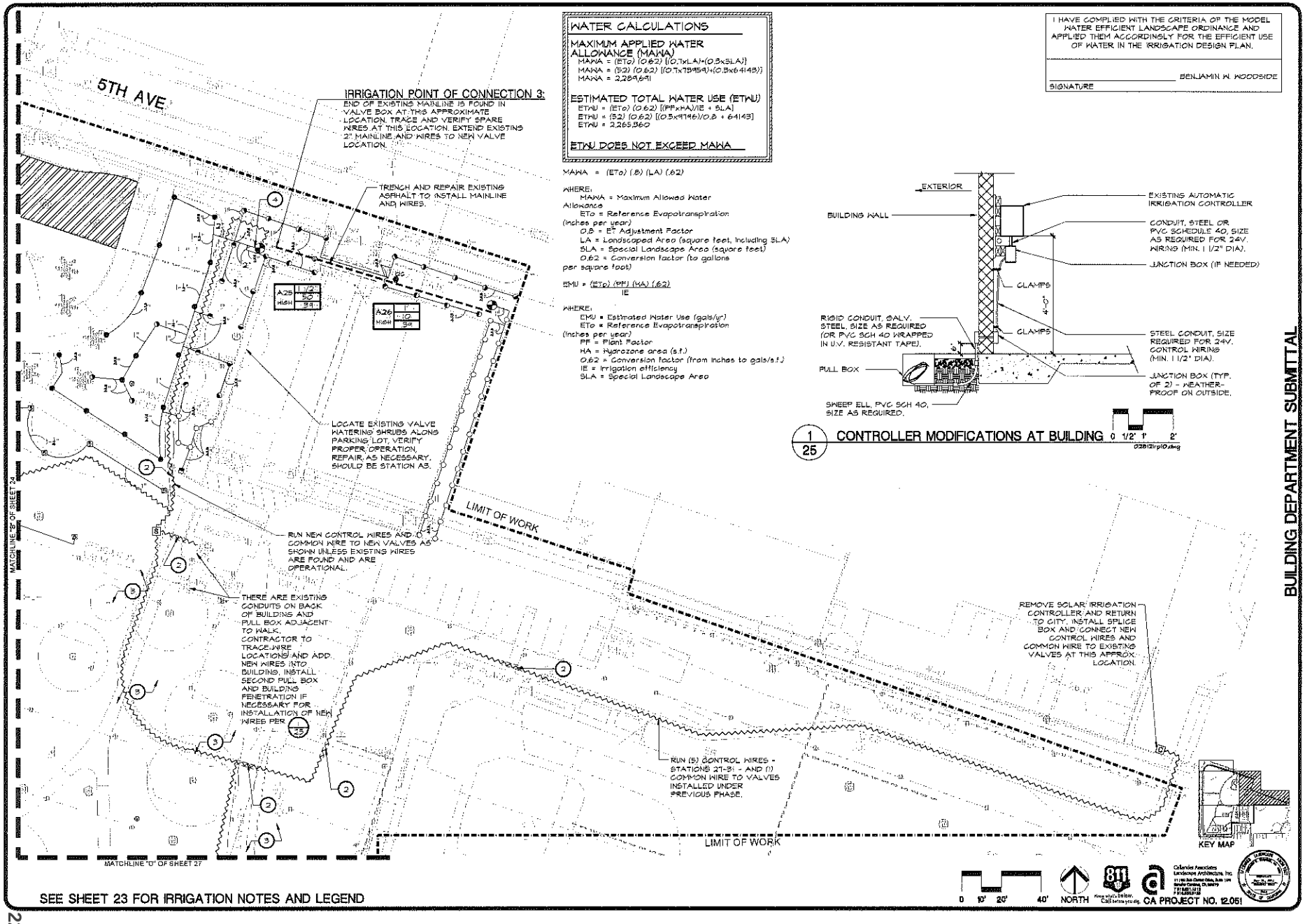

WATER CALCULATIONS

MAXIMUM APPLIED WATER ALLOWANCE (MAWA)

MAWA = (ETo) (0.62) [(0.7xLA)+(0.3xSLA)]
MAWA = (52) (0.62) [(0.7x75959)+(0.3x64143)]
MAWA = 2,289,691

ESTIMATED TOTAL WATER USE (ETWU)

ETWU = (ETo) (0.62) [(PFxHA)/IE + SLA]
ETWU = (52) (0.62) [(0.3x9796)/0.8 + 64143]
ETWU = 2,265,360

ETWU DOES NOT EXCEED MAWA

MAWA = (ETo) (.8) (LA) (.62)

WHERE:
MAWA = Maximum Allowed Water Allowance
ETo = Reference Evapotranspiration (inches per year)
0.8 = ET Adjustment Factor
LA = Landscaped Area (square feet, including SLA)
SLA = Special Landscape Area (square feet)
0.62 = Conversion factor (to gallons per square foot)

$$EMU = \frac{(ETo)\ (PF)\ (HA)\ (.62)}{IE}$$

WHERE:
EMU = Estimated Water Use (gals/yr)
ETo = Reference Evapotranspiration (inches per year)
PF = Plant Factor
HA = Hydrozone area (s.f.)
0.62 = Conversion factor (from inches to gals/s.f.)
IE = Irrigation efficiency
SLA = Special Landscape Area

I HAVE COMPLIED WITH THE CRITERIA OF THE MODEL WATER EFFICIENT LANDSCAPE ORDINANCE AND APPLIED THEM ACCORDINGLY FOR THE EFFICIENT USE OF WATER IN THE IRRIGATION DESIGN PLAN.

BENJAMIN W. WOODSIDE
SIGNATURE

1/25 CONTROLLER MODIFICATIONS AT BUILDING 0 1/2' 1' 2'
02812irp10.dwg

BUILDING DEPARTMENT SUBMITTAL

CITY OF SACRAMENTO
PARKS AND RECREATION DEPARTMENT
PARK, PLANNING, DESIGN, & DEVELOPMENT
LANDSCAPE ARCHITECTURE SECTION
915 I STREET, 5TH FLOOR,
SACRAMENTO, CA 95814
McCLATCHY PARK - L19136500

McCLATCHY PARK RENOVATION
IRRIGATION PLAN

LANDSCAPE ARCHITECT: BW
DESIGN BY/DRAWN BY: DY/BC
CAD FILE: 12.051
DATE: 7/26/13
SCALE:
CAD SCALE:
P.N.: L19136500
REVISIONS

SHEET NO 25 OF 52

SEE SHEET 23 FOR IRRIGATION NOTES AND LEGEND

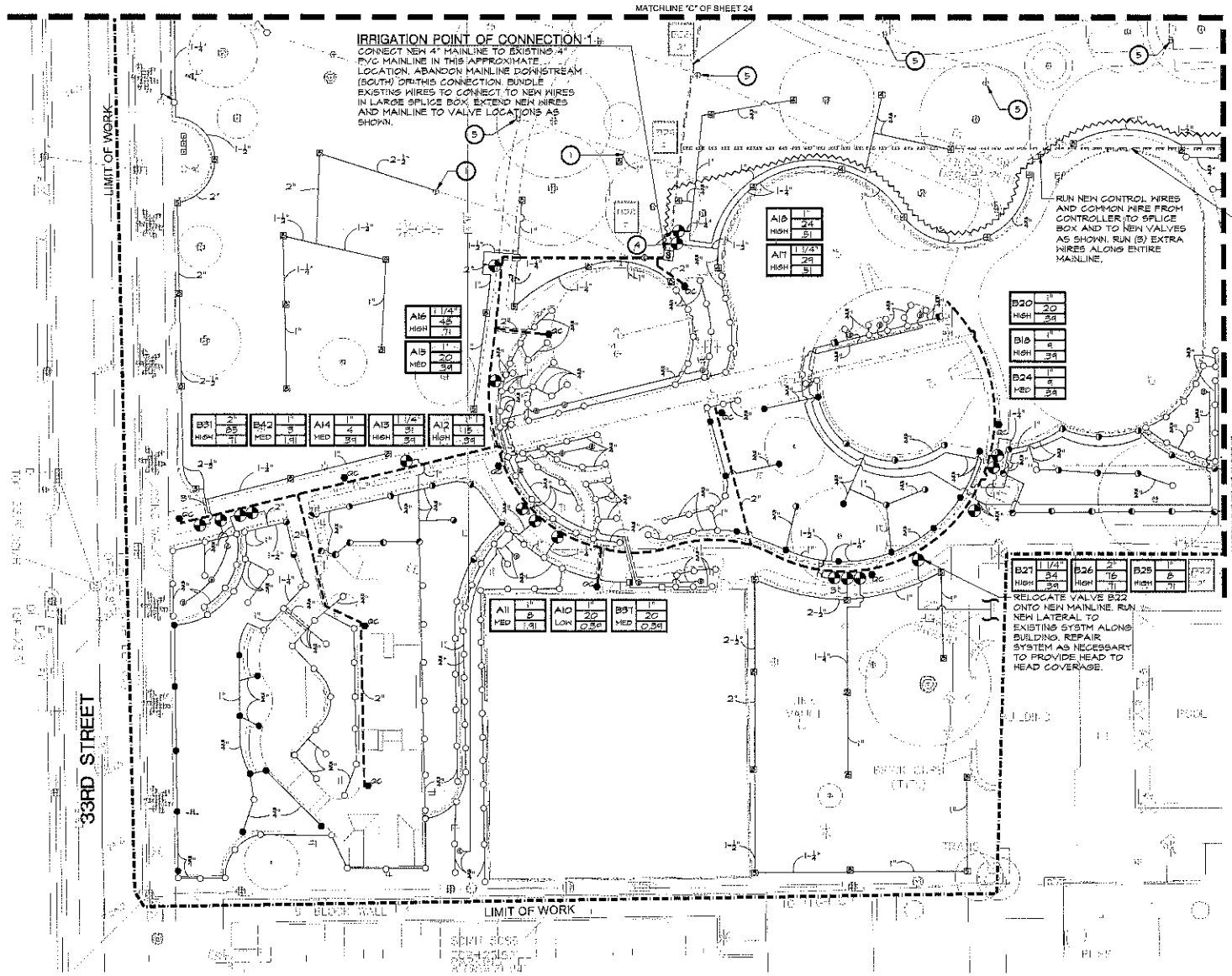

I HAVE COMPLIED WITH THE CRITERIA OF THE MODEL WATER EFFICIENT LANDSCAPE ORDINANCE AND APPLIED THEM ACCORDINGLY FOR THE EFFICIENT USE OF WATER IN THE IRRIGATION DESIGN PLAN.

BENJAMIN W. WOODSIDE
SIGNATURE

SEE SHEET 23 FOR IRRIGATION NOTES AND LEGEND

BUILDING DEPARTMENT SUBMITTAL

CITY OF SACRAMENTO
PARKS AND RECREATION DEPARTMENT
PARK, PLANNING, DESIGN, & DEVELOPMENT
LANDSCAPE ARCHITECTURE SECTION
915 I STREET, 5TH FLOOR,
SACRAMENTO, CA 95814

McCLATCHY PARK - L19136500

McCLATCHY PARK RENOVATION
IRRIGATION PLAN

LANDSCAPE ARCHITECT BH
DESIGN BY/DRAWN BY DM/BC
CAD FILE 12.051
DATE 7/26/13
SCALE
CAD SCALE
P.N. L19136500
REVISIONS

SHEET NO. 26 OF 52

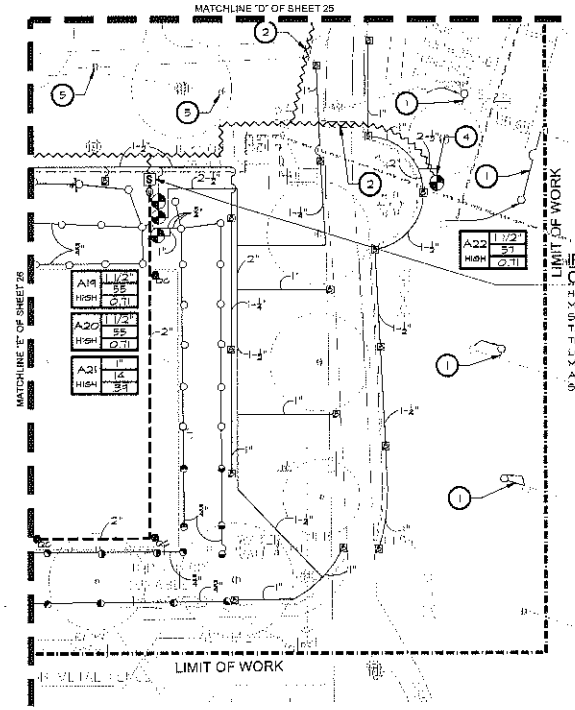

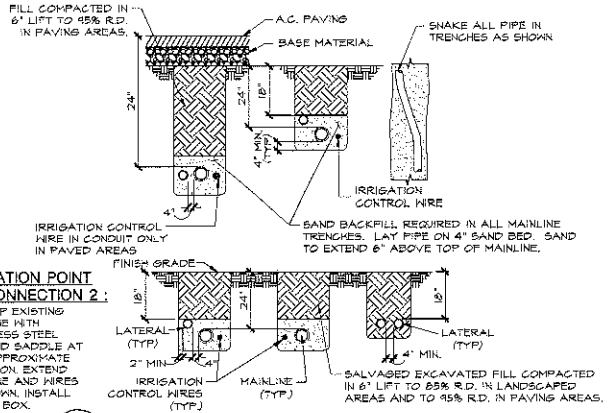

IRRIGATION POINT OF CONNECTION 2 :
HOT TAP EXISTING MAINLINE WITH STAINLESS STEEL TAP AND SADDLE AT THIS APPROXIMATE LOCATION. EXTEND MAINLINE AND WIRES AS SHOWN. INSTALL SPLICE BOX.

1/27 TRENCHING
N.T.S.
CITY OF SACRAMENTO STANDARD DETAIL.

I HAVE COMPLIED WITH THE CRITERIA OF THE MODEL WATER EFFICIENT LANDSCAPE ORDINANCE AND APPLIED THEM ACCORDINGLY FOR THE EFFICIENT USE OF WATER IN THE IRRIGATION DESIGN PLAN.

SIGNATURE — BENJAMIN K. WOODSIDE

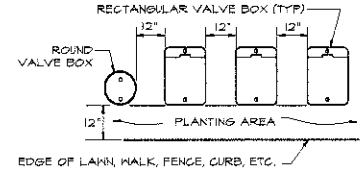

NOTES:
1. CENTER BOXES OVER VALVES.
2. SET BOXES IN GROUND COVER/SHRUB AREA WHERE POSSIBLE.
3. SET BOXES PARALLEL TO EACH OTHER AND PERPENDICULAR TO EDGE.
4. AVOID HEAVILY COMPACTING SOIL AROUND BOXES TO PREVENT DAMAGING VALVE BOXES.

2/27 VALVE BOX LAYOUT
N.T.S.
CITY OF SACRAMENTO STANDARD DETAIL
12.051 VALVE BOX LAYOUT

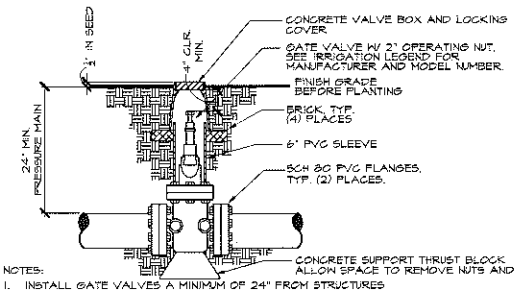

NOTES:
1. INSTALL GATE VALVES A MINIMUM OF 24" FROM STRUCTURES OR HARDSCAPING.
2. INSTALL GATE VALVES IN PLANTING BEDS WHEREVER POSSIBLE.
3. INSTALL VALVE BOX SO THAT TOP OF VALVE BOX IS FLUSH WITH ADJACENT HARDSCAPING.
4. SEE PLAN SHEETS FOR MORE INFORMATION.

3/27 GATE VALVE
N.T.S.
CITY OF SACRAMENTO STANDARD DETAIL

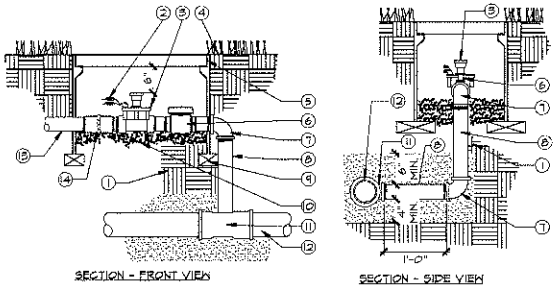

SECTION - FRONT VIEW

SECTION - SIDE VIEW

CALLOUTS:
1. SOIL IN IRRIGATION MAIN AND LATERAL LINES SHALL BE COMPACTED IN 6" LIFT WITH EACH LIFT COMPACTED TO 85% R.D. IN LANDSCAPED AREAS AND 95% R.D. IN PAVING AREAS.
2. VALVE CONTROL WIRE PROVIDE "5M DBY" SEAL PACKS AT ALL SPLICES & 36" OF EXCESS OF WIRE IN A 1" DIA. COIL.
3. REMOTE CONTROL VALVE.
4. FINISH GRADE.
5. 13" X 20" JUMBO RECTANGULAR LOCKING VALVE BOX.
6. FULL PORT PVC BALL VALVE.
7. SCH. 80 PVC 90 DEGREE ELL.
8. SCH. 80 PVC NIPPLE.
9. BRICK - 1 @ EA. CORNER.
10. PEA GRAVEL.
11. SCH. 80 PVC TEE.
12. PVC MAIN LINE.
13. IRRIGATION SUPPLY LINE.
14. SCH. 80 UNION.

4/27 REMOTE CONTROL VALVE
N.T.S.
CITY OF SACRAMENTO STANDARD DETAIL

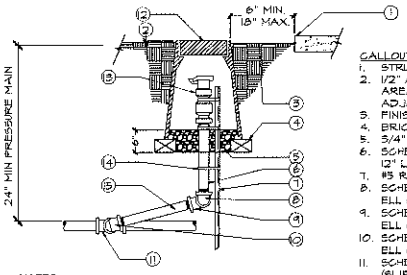

NOTES:
A. INSTALL QUICK COUPLING VALVES IN PLANTING BEDS WHEREVER POSSIBLE.
B. SEE PLAN & SPECIFICATIONS FOR MORE INFORMATION.
C. SIZE OF ASSEMBLY TO BE EQUAL TO THE FIPT OF THE QUICK COUPLER.

CALLOUTS:
1. STRUCTURE OR PAVING
2. 1/2" ABOVE FINISH GRADE IN TURF AREAS AND FLUSH WITH THE TOP OF ADJACENT PAVING IN PLANTING BEDS.
3. FINISH GRADE BEFORE PLANTING.
4. BRICK SUPPORT, TYPICAL (2) PLACES.
5. 3/4" MINUS DRAIN ROCK.
6. SCHEDULE 80 PVC THREADED NIPPLE, 12" LONG.
7. #3 REBAR ANGLE IRON, 36" LONG.
8. SCHEDULE 80 PVC 90 DEGREES 12T ELL (FIPTxMIPT).
9. SCHEDULE 80 PVC 90 DEGREES 12T ELL (FIPTxMIPT).
10. SCHEDULE 80 PVC 90 DEGREES 12T ELL (FIPTxMIPT).
11. SCHEDULE 80 PVC TEE (SLIPxSLIPxFIPT).
12. 10" ROUND PLASTIC VALVE BOX WITH LOCKING COVER.
13. QUICK COUPLING VALVE, SEE PLANS OR SPECS FOR MANUFACTURER AND MODEL NUMBER.
14. STAINLESS STEEL HOSE CLAMPS, MINIMUM OF (3) PLACES.
15. SCHEDULE 80 PVC THREADED NIPPLE, 12" LONG.

5/27 QUICK COUPLER
N.T.S.
CITY OF SACRAMENTO STANDARD DETAIL

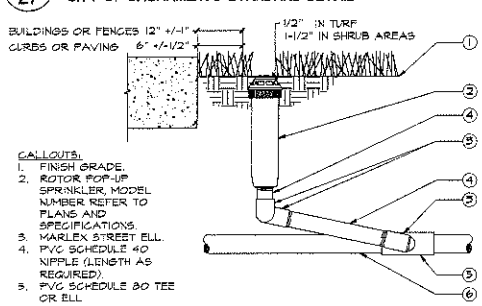

CALLOUTS:
1. FINISH GRADE.
2. ROTOR POP-UP SPRINKLER, MODEL NUMBER REFER TO PLANS AND SPECIFICATIONS.
3. MARLEX STREET ELL.
4. PVC SCHEDULE 40 NIPPLE (LENGTH AS REQUIRED).
5. PVC SCHEDULE 80 TEE OR ELL.
6. PVC LATERAL PIPE.

6/27 ROTOR HEAD
N.T.S.
CITY OF SACRAMENTO STANDARD DETAIL

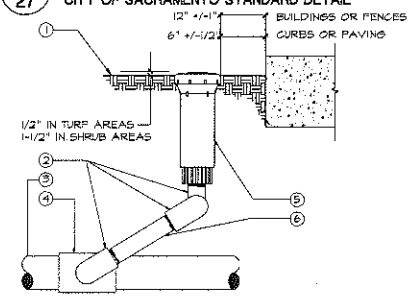

CALLOUTS:
1. FINISH GRADE.
2. MARLEX STREET ELLS.
3. IRRIGATION LATERAL.
4. PVC SCHEDULE 80, 90 DEGREE ELL (5xT) OR TEE (5xSxT)
5. POP-UP SPRAY HEAD.
6. PVC SCHEDULE 40 NIPPLE. (LENGTH AS REQUIRED).

7/27 ROTARY SPRAY HEAD
N.T.S.
CITY OF SACRAMENTO STANDARD DETAIL

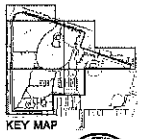
KEY MAP

811 Dig Alert. Call before you dig.

Callander Associates Landscape Architecture, Inc.
11140 Sun Center Drive, Suite 104
Rancho Cordova, CA 95670
916.852.8100
FAX 916.852.8102

CA PROJECT NO. 12.051

SEE SHEET 23 FOR IRRIGATION NOTES AND LEGEND

BUILDING DEPARTMENT SUBMITTAL

CITY OF SACRAMENTO
PARKS AND RECREATION DEPARTMENT
PARK, PLANNING, DESIGN & DEVELOPMENT
LANDSCAPE ARCHITECTURE SECTION
915 I STREET, 5TH FLOOR,
SACRAMENTO, CA 95814
McCLATCHY PARK - L19126500

McCLATCHY PARK RENOVATION
IRRIGATION PLAN

LANDSCAPE ARCHITECT: BN
DESIGN BY/DRAWN BY:
CAD FILE: 12.051
DATE: 7/26/12
SCALE:
CAD SCALE:
P.N. L19126500
REVISIONS

SHEET NO 27 OF 52

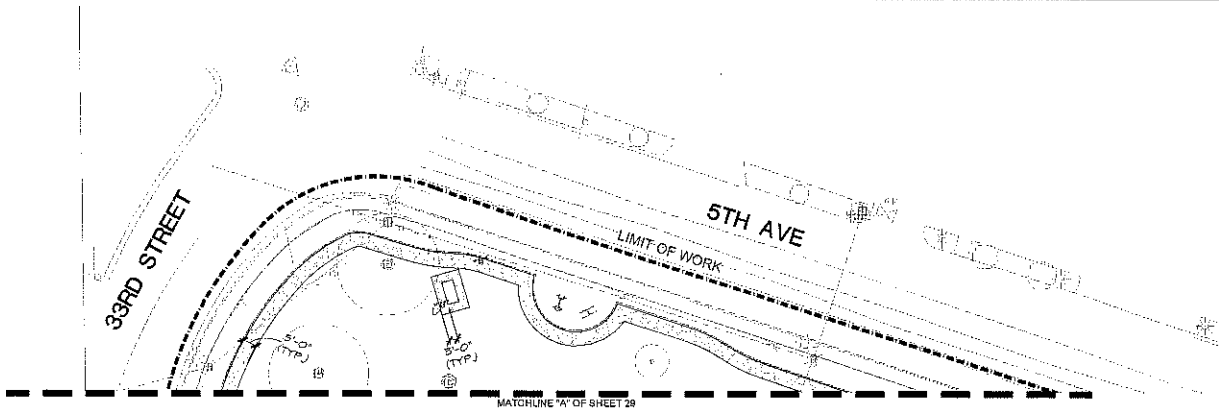

I HAVE COMPLIED WITH THE CRITERIA OF THE MODEL WATER EFFICIENT LANDSCAPE ORDINANCE AND APPLIED THEM ACCORDINGLY FOR THE EFFICIENT USE OF WATER IN THE IRRIGATION DESIGN PLAN.

_____ BENJAMIN W. WOODSIDE
SIGNATURE

PLANTING LIST

SYMBOL	BOTANICAL NAME	COMMON NAME	SIZE	SPACING	QUANTITY	WATER USAGE	NOTES
TREES							
ACE BUE	ACER BUERGERIANUM	TRIDENT MAPLE	15 GAL	AS SHOWN	17	M	
CER OCC	CERCIS OCCIDENTALIS	WESTERN REDBUD	24" BOX	AS SHOWN	4	VL	SINGLE TRUNK
LAG IND	LAGERSTROEMIA INDICA 'CATAWBA'	CATAWBA CRAPE MYRTLE	24" BOX	AS SHOWN	7	L	MULTI-TRUNK
PIN ELD	PINUS ELDARICA	AFGHAN PINE	24" BOX	AS SHOWN	2	L	
PLA ACE	PLATANUS X ACERIFOLIA 'BLOODGOOD'	BLOODGOOD PLANETREE	15 GAL	AS SHOWN	9	M	SINGLE TRUNK
PLA RAC	PLATANUS RACEMOSA	CALIFORNIA SYCAMORE	15 GAL	AS SHOWN	15	M	
QUE LOB	QUERCUS LOBATA	VALLEY OAK	15 GAL	AS SHOWN	4	L	
QUE RUB	QUERCUS RUBRA	RED OAK	15 GAL	AS SHOWN	8	M	
ZEL SER	ZELKOVA SERRATA	JAPANESE ZELKOVA	15 GAL	AS SHOWN	16	M	
SHRUBS							
BAC PIL	BACCHARIS PILULARIS	DWARF COYOTE BRUSH	1 GAL	AS SHOWN	21	L	
BER THU	BERBERIS THUNBERGII 'CRIMSON PYGMY'	CRIMSON PYGMY DWARF JAPANESE BARBERRY	5 GAL	AS SHOWN	32	L	
DIE BIC	DIETES BICOLOR	FORTNIGHT LILY	1 GAL	AS SHOWN	85	L	
	FESTUCA GLAUCA	BLUE FESCUE	1 GAL	12" O.C.	495	L	
	JUNIPERUS SABINA 'BUFFALO'	BUFFALO JUNIPER	1 GAL	6'-0" O.C.	81	L	
	MYOPORUM PARVIFOLIUM	CREEPING MYOPORUM	1 GAL	6'-0" O.C.	36	L	
STI TEN	NASSELLA TENUISISMA	MEXICAN FEATHER GRASS	1 GAL	AS SHOWN	87	L	
PHO CRE	PHORMIUM 'CREAM DELIGHT'	CREAM DELIGHT NEW ZEALAND FLAX	5 GAL	AS SHOWN	38	M	
RHA IND	RHAPHIOLEPIS INDICA 'BALLERINA'	BALLERINA INDIAN HAWTHORN	5 GAL	AS SHOWN	51	M	
	ROSA X 'NOALA'	FLOWER CARPET ROSE	1 GAL	3'-0" O.C.	55	M	
ROS PRO	ROSMARINUS PROSTRATUS	PROSTRATE ROSEMARY	1 GAL	AS SHOWN	44	L	
BUTTERFLY GARDEN							
BUD BLU	BUDDLEJA LO & BEHOLD 'BLUE CHIP'	BLUE CHIP DWARF BUTTERFLY BUSH	5 GAL	AS SHOWN	22	L	
CIS SAL	CISTUS SALVIFOLIUS 'PROSTRATUS'	CREEPING ROCKROSE	1 GAL	AS SHOWN	9	L	
	HEMEROCALLIS 'STELLA DE ORO'	STELLA DE ORO DAYLILY	1 GAL	AS SHOWN	25	M	
LAV ANG	LAVANDULA ANGUSTIFOLA 'HIDCOTE'	HIDCOTE ENGLISH LAVENDER	1 GAL	AS SHOWN	15	L	
SAL MIC	SALVIA MICROPHYLLA	BABY SAGE	1 GAL	AS SHOWN	22	M	
PEN HET	PENSTEMON HETEROPHYLLUS 'MARGARITA BOP'	FOOTHILL PENSTEMON	1 GAL	2'-0" O.C.	32	L	
PHO JAC	PHORMIUM TENAX 'JACK SPRATT'	JACK SPRATT NEW ZEALAND FLAX	1 GAL	AS SHOWN	29	M	
PIT TOB	PITTOSPORUM TOBIRA 'WHEELERS DWARF'	WHEELER'S DWARF PITTOSPORUM	1 GAL	AS SHOWN	96	M	

GROUNDCOVER

- BASE BID: TURF FROM HYDROSEED, PER SPECS. ADD ALTERNATE #2: TURF FROM SOD, PER SPECS.
- BARK MULCH ONLY PER SPECS. NOTE: ALL OTHER SHRUB/GROUNDCOVER AREAS SHALL RECEIVE BARK MULCH PER PLANS.
- EXISTING PLANT MATERIAL TO REMAIN

PLANTING NOTES

1. MULCH: INSTALL A UNIFORM 3" COVERING OF SMALL DECORATIVE BARK, 1" TO 3" PARTICLE SIZE, IN ALL PLANTING AREAS. MATERIAL AVAILABLE FROM SUN-UP FOREST PRODUCTS, INC. (916)751-0665.
2. EXISTING PLANT MATERIAL: PROTECT ALL EXISTING PLANT MATERIAL TO REMAIN. CONTRACTOR TO REPAIR ANY DAMAGES INCURRED AS A DIRECT RESULT OF THIS CONTRACT TO THE OWNER'S SATISFACTION AT NO ADDITIONAL COST.
3. GROUNDCOVER: PROVIDE GROUNDCOVER AT INDICATED ON-CENTER SPACING THROUGHOUT ALL PLANTING AREAS. GROUNDCOVER SHALL BE PROVIDED UP TO THE WATERING BASIN OF ALL TREES AND SHRUBS.
4. TOPSOIL: ALL PLANTING AREAS TO RECEIVE A SIX INCH LAYER OF NATIVE TOPSOIL PER SPECIFICATIONS.
5. SOILS TESTING: SEE SPECIFICATIONS FOR TESTING OF TOPSOIL AND AMENDMENTS.
6. PLACE TURF SEED IN ALL TURF AREAS DAMAGED BY CONSTRUCTION OPERATIONS, OR WHERE CONCRETE PADS OR PAVING ARE REMOVED. REPLACE WITH TURF SOD IF ADD ALT #2 IS AWARDED.
7. IRRIGATION SYSTEM SHALL BE OPERATIONAL AND COVERAGE APPROVED PRIOR TO INSTALLATION OF PLANT MATERIALS.
8. PROVIDE MINIMUM SLOPE OF 2% FOR DRAINAGE IN ALL PLANTED AREAS.
9. THE FINISHED GRADE FOR ALL PLANTERS SHALL BE 5" BELOW THE TOP-OF-CURB OR ADJACENT FLATWORK AND 1/2" FOR TURF AREAS.
10. ALL PLANT MATERIAL SHALL MATCH SPECIFICATIONS PER SPECIES, AND SHALL COMPLY WITH ANSI Z60.1 STANDARD FOR "NEW NURSERY STOCK."
11. IMMEDIATELY UPON AWARD, CONTRACTOR SHALL SECURE PLANT MATERIALS AS SPECIFIED. CONTACT LANDSCAPE ARCHITECT FOR APPROVED SUBSTITUTIONS. NO SUBSTITUTIONS FOR PLANT MATERIALS WILL BE ALLOWED WITHOUT PRIOR WRITTEN APPROVAL FROM THE LANDSCAPE ARCHITECT.
12. TREE LOCATIONS SHALL BE FIELD STAKED AND LOCATIONS APPROVED BY THE LANDSCAPE ARCHITECT PRIOR TO PLANTING. TREE LOCATION MAY BE ADJUSTED IN THE FIELD TO SUIT SITE REQUIREMENTS AS DIRECTED BY THE LANDSCAPE ARCHITECT.
13. ALL TREES SHALL BE PLANTED 10 FEET AWAY FROM NEW OR EXISTING WATER MAINS OR UTILITY LINES SHOWN ON THE PLANS.
14. REFER TO PLANTING DETAILS, PROJECT SPECIFICATIONS, AND CITY OF SACRAMENTO STANDARD SPECIFICATIONS FOR MATERIALS AND INSTALLATION PROCEDURES. PLANT QUANTITIES SHOWN ARE FOR BIDDING REFERENCE ONLY. CONTRACTOR SHALL SUPPLY ALL PLANTS REQUIRED TO FULFILL DESIGN INTENT AS SHOWN ON PLANS.

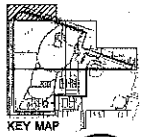
KEY MAP

0 10' 20' 40'

NORTH

811 Know what's below. Call before you dig.

Callander Associates Landscape Architecture, Inc.
1120 Iron Center Drive, Suite 100
Rancho Cordova, CA 95670
T 916.851.1813
F 916.851.1819

CA PROJECT NO. 12.051

BUILDING DEPARTMENT SUBMITTAL

CITY OF SACRAMENTO
PARKS AND RECREATION DEPARTMENT
PARK, PLANNING, DESIGN, & DEVELOPMENT
LANDSCAPE ARCHITECTURE SECTION
915 I STREET, 5TH FLOOR,
SACRAMENTO, CA 95814
McCLATCHY PARK - L19136500

McCLATCHY PARK RENOVATION
PLANTING PLAN

LANDSCAPE ARCHITECT: BW
DESIGN BY/DRAWN BY: DM/BC
CAD FILE: 12.051
DATE: 7/26/13
SCALE:
CAD SCALE:
P.N.: L19136500
REVISIONS

SHEET NO. 28 OF 52

MATCHLINE "A" OF SHEET 28

5TH AVE

LIMIT OF WORK

33RD STREET

LIMIT OF WORK

PLA RAC

5'-0" (TYP)

5'-0" (TYP)

5'-0" (TYP)

MATCHLINE "B" OF SHEET 30

MATCHLINE "C" OF SHEET 31

I HAVE COMPLIED WITH THE CRITERIA OF THE MODEL WATER EFFICIENT LANDSCAPE ORDINANCE AND APPLIED THEM ACCORDINGLY FOR THE EFFICIENT USE OF WATER IN THE IRRIGATION DESIGN PLAN.

SIGNATURE BENJAMIN W. WOODSIDE

BUILDING DEPARTMENT SUBMITTAL

KEY MAP

0 10' 20' 40'

NORTH

811 Know what's below. Call before you dig.

Callander Associates Landscape Architecture, Inc.

CA PROJECT NO. 12.051

SEE SHEET 28 FOR PLANTING NOTES AND LIST

CITY OF SACRAMENTO
PARKS AND RECREATION DEPARTMENT
PARK, PLANNING, DESIGN, & DEVELOPMENT
LANDSCAPE ARCHITECTURE SECTION
915 I STREET, 5TH FLOOR,
SACRAMENTO, CA 95814
McCLATCHY PARK - L19136500

McCLATCHY PARK RENOVATION
PLANTING PLAN

LANDSCAPE ARCHITECT: BW

DESIGN BY/DRAWN BY: DW/BC

CAD FILE: 12.051

DATE: 7/26/13

SCALE:

CAD SCALE:

T.N. L19136500

REVISIONS

SHEET NO. 29 OF 52

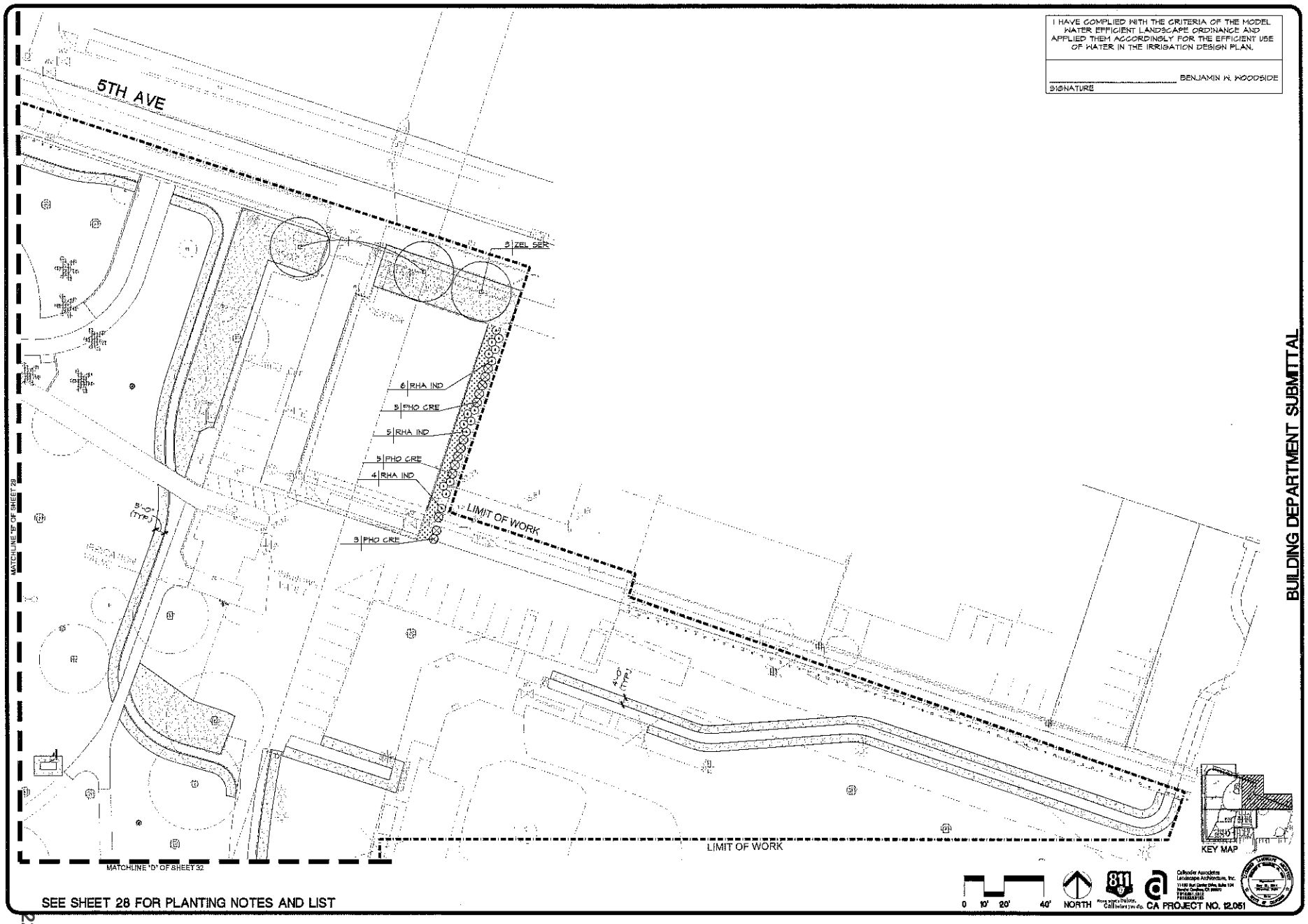

I HAVE COMPLIED WITH THE CRITERIA OF THE MODEL WATER EFFICIENT LANDSCAPE ORDINANCE AND APPLIED THEM ACCORDINGLY FOR THE EFFICIENT USE OF WATER IN THE IRRIGATION DESIGN PLAN.

BENJAMIN W. WOODSIDE
SIGNATURE

SEE SHEET 28 FOR PLANTING NOTES AND LIST

BUILDING DEPARTMENT SUBMITTAL

CITY OF SACRAMENTO
PARKS AND RECREATION DEPARTMENT
PARK, PLANNING, DESIGN, & DEVELOPMENT
LANDSCAPE ARCHITECTURE SECTION
915 I STREET, 5TH FLOOR,
SACRAMENTO, CA 95814

McCLATCHY PARK - L19136500

McCLATCHY PARK IMPROVEMENTS
PLANTING PLAN

LANDSCAPE ARCHITECT: BW
DESIGN BY/DRAWN BY: DM/BC
CAD FILE: 12.051
DATE: 7/26/15
SCALE:
CAD SCALE:
P.N.: L19136500
REVISIONS

SHEET NO. 30 OF 52

I HAVE COMPLIED WITH THE CRITERIA OF THE MODEL WATER EFFICIENT LANDSCAPE ORDINANCE AND APPLIED THEM ACCORDINGLY FOR THE EFFICIENT USE OF WATER IN THE IRRIGATION DESIGN PLAN.

BENJAMIN W. WOODSIDE

SIGNATURE

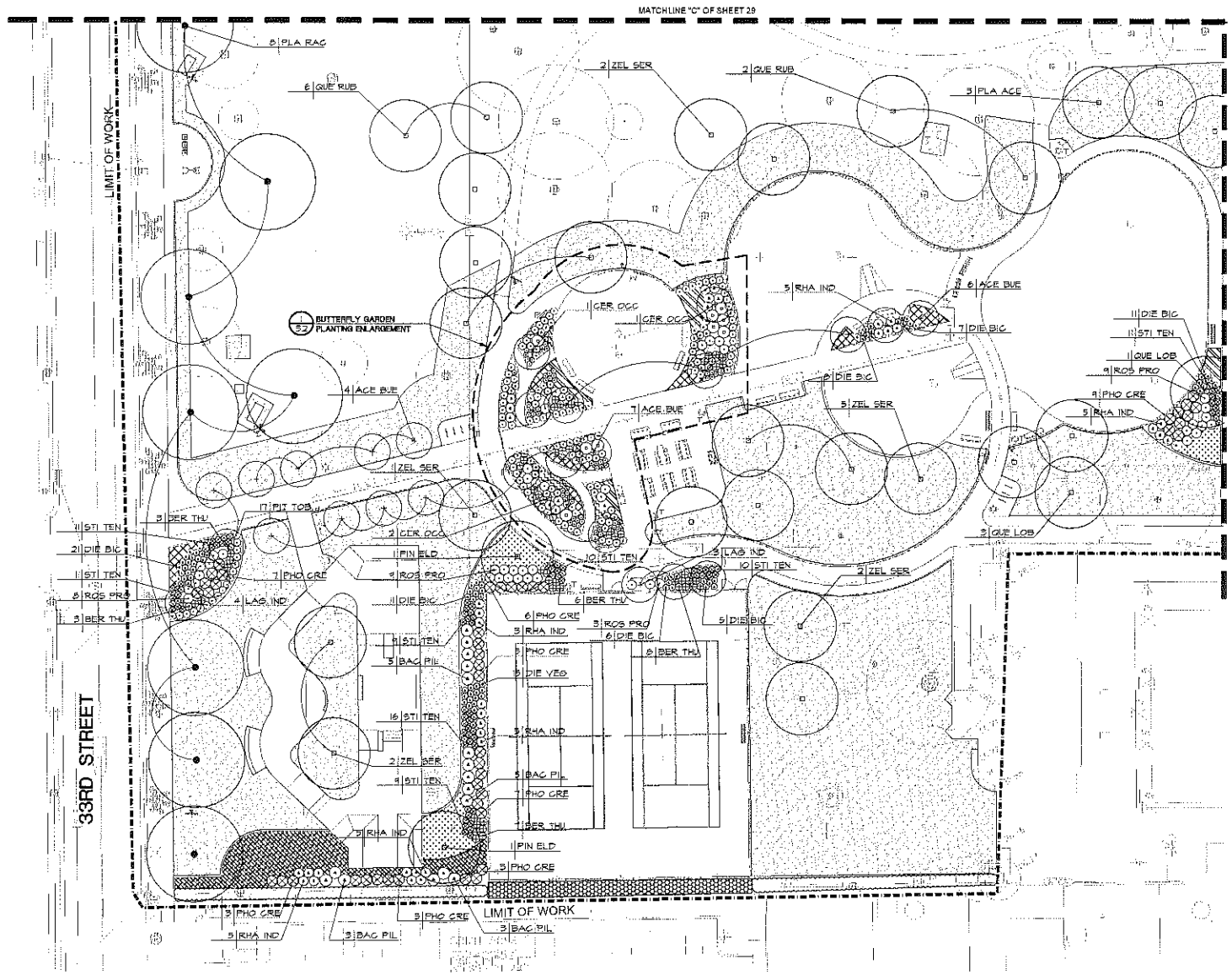

SEE SHEET 28 FOR PLANTING NOTES AND LIST

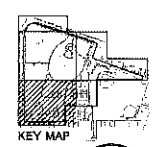

0 10' 20' 40'

NORTH

811 Know what's below. Call before you dig.

Callander Associates Landscape Architecture, Inc.

CA PROJECT NO. 12.051

BUILDING DEPARTMENT SUBMITTAL

CITY OF SACRAMENTO
PARKS AND RECREATION DEPARTMENT
PARK, PLANNING, DESIGN, & DEVELOPMENT
LANDSCAPE ARCHITECTURE SECTION
915 I STREET, 5TH FLOOR,
SACRAMENTO, CA 95814

McCLATCHY PARK - L19136500

McCLATCHY PARK RENOVATION
PLANTING PLAN

LANDSCAPE ARCHITECT: BW
DESIGN BY/DRAWN BY: DM/BC
CAD FILE: 12.051
DATE: 7/26/13
SCALE:
CAD SCALE:
P.N.: L19136500
REVISIONS

SHEET NO. 31 OF 52

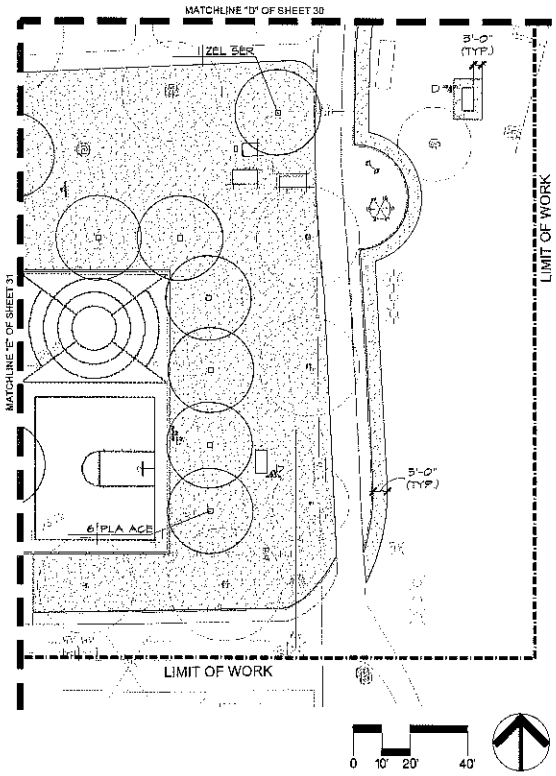

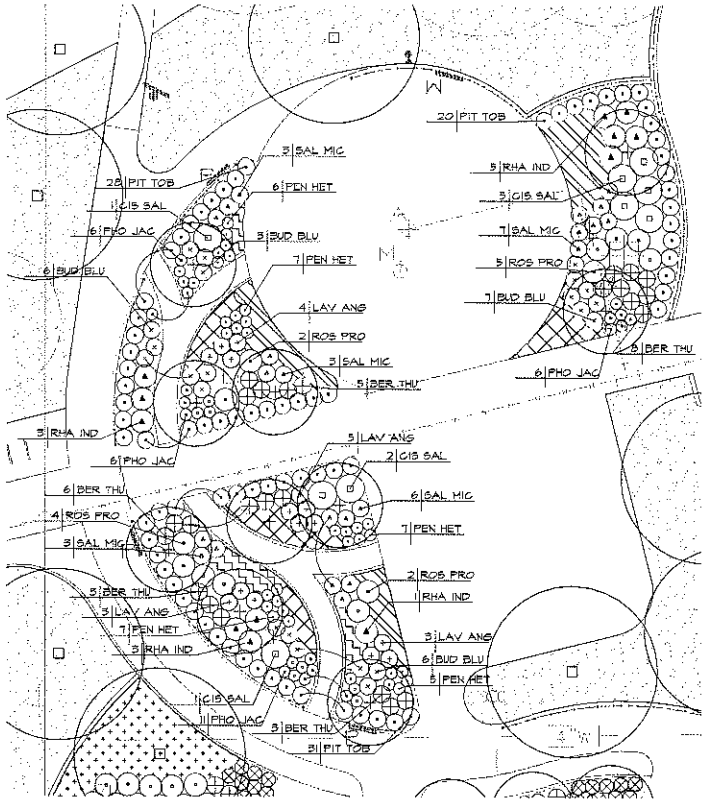

1/32 BUTTERFLY GARDEN PLANTING ENLARGEMENT

I HAVE COMPLIED WITH THE CRITERIA OF THE MODEL WATER EFFICIENT LANDSCAPE ORDINANCE AND APPLIED THEM ACCORDINGLY FOR THE EFFICIENT USE OF WATER IN THE IRRIGATION DESIGN PLAN.

BENJAMIN W. WOODSIDE

SIGNATURE

BUILDING DEPARTMENT SUBMITTAL

CITY OF SACRAMENTO
PARKS AND RECREATION DEPARTMENT
PARK, PLANNING, DESIGN, & DEVELOPMENT
LANDSCAPE ARCHITECTURE SECTION
915 I STREET, 5TH FLOOR
SACRAMENTO, CA 95814

McCLATCHY PARK - L19136500

McCLATCHY PARK RENOVATION
PLANTING PLAN

LANDSCAPE ARCHITECT: BW
DESIGN BY/DRAWN BY: DM/BC
CAD FILE: 12.051
DATE: 7/26/13
SCALE:
CAD SCALE:
P.N. L19136500
REVISIONS

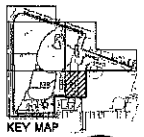
KEY MAP

811 Know what's below. Call before you dig.

Callander Associates Landscape Architecture, Inc.
11130 Sun Center Drive, Suite 100
Rancho Cordova, CA 95670
916.635.1313
916.635.1312
www.callander.com

CA PROJECT NO. 12.051

SHEET NO. 32 OF 52

SEE SHEET 28 FOR PLANTING NOTES AND LIST

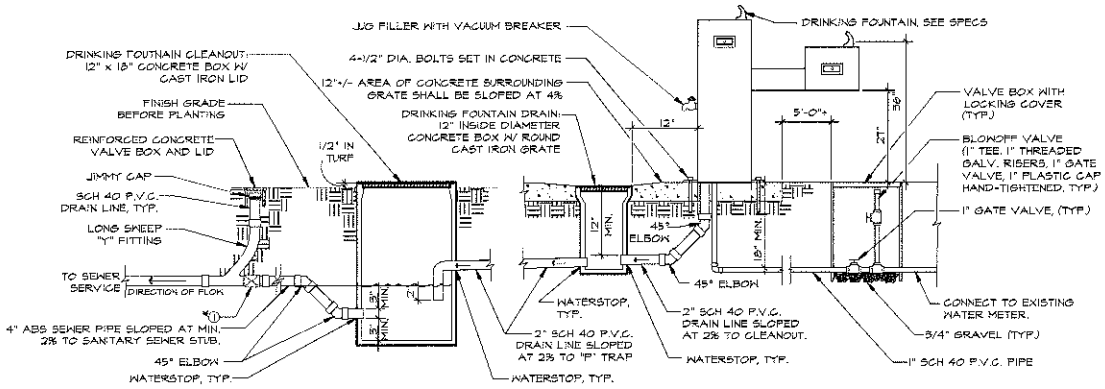

1/33 **DRINKING FOUNTAIN WITH JUG FILLER** N.T.S.
CITY OF SACRAMENTO STANDARD DETAIL

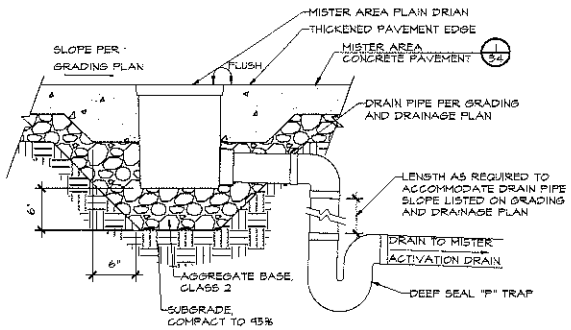

2/33 **MISTER AREA DRAIN** 0 1/2' 1' 2'

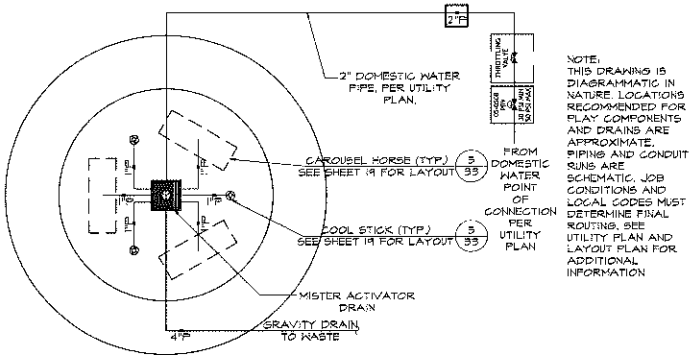

3/33 **MISTER AREA PIPING PLAN** N.T.S.

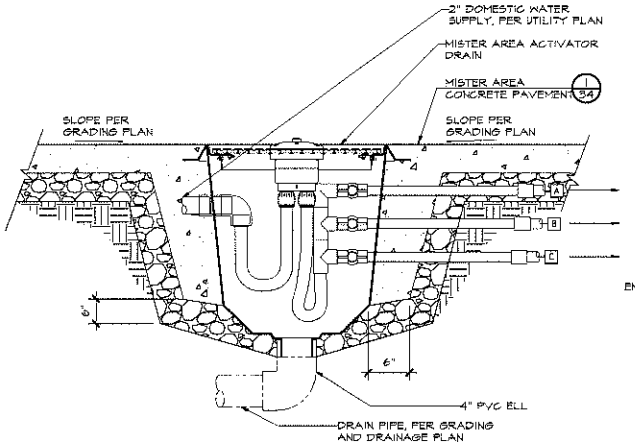

4/33 **MISTER AREA ACTIVATOR / DRAIN** 0 1/2' 1' 2'

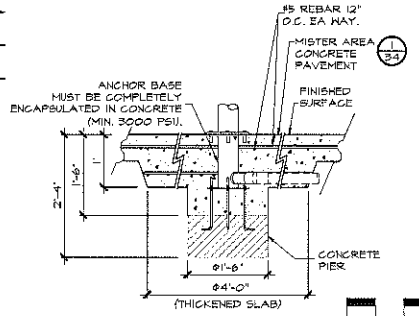

5/33 **MISTER AREA FEATURE INSTALLATION** 0 1/2' 1' 2'

BUILDING DEPARTMENT SUBMITTAL

CA PROJECT NO. 12.051

Calander Associates Landscape Architecture, Inc.

CITY OF SACRAMENTO
PARKS AND RECREATION DEPARTMENT
PARK, PLANNING, DESIGN & DEVELOPMENT
LANDSCAPE ARCHITECTURE SECTION
915 I STREET, 5TH FLOOR,
SACRAMENTO, CA 95814
McCLATCHY PARK - L19136500

McCLATCHY PARK RENOVATION
CONSTRUCTION DETAILS

LANDSCAPE ARCHITECT: BW
DESIGN BY/DRAWN BY: DM/BC
CAD FILE: 12.051
DATE: 7/26/13
SCALE:
CAD SCALE:
P.N.: L19136500
REVISIONS:

SHEET NO 33 OF 52

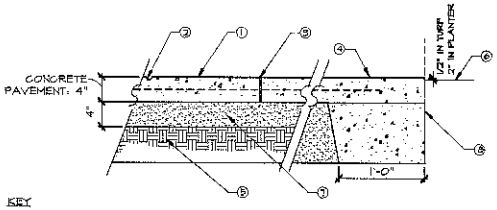

KEY

1. CONCRETE PAVEMENT WITH #3 REBAR 18" O.C. BOTH WAYS. MEDIUM BROOM FINISH PERPENDICULAR TO WALKWAY EDGE.
2. SCORE JOINT
3. EXPANSION JOINT — 2/34
   FOR MISTER AREA CONCRETE PAVEMENT, PROVIDE WATER-TIGHT EXPANSION JOINT PER 3/34
4. TOOLED EDGE, TYP.
5. SUBGRADE COMPACTED TO 95%
6. FINISH GRADE
7. AGGREGATE BASE, COMPACTED TO 95%.
8. THICKEN EXTERIOR EDGES WHEN ADJACENT TO PLAY AREA AND ALL CONCRETE AREAS 8'-0" AND WIDER, BOTH SIDES 7/34

1/34 CONCRETE PAVEMENT/MISTER AREA CONCRETE PAVEMENT

N.T.S.

12051 CONCRETE.DWG

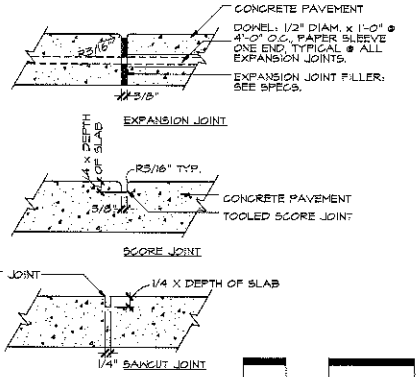

2/34 EXPANSION / SCORE JOINT

0 1/4' 1/2' 1'

12051 expansion-score joints.dwg

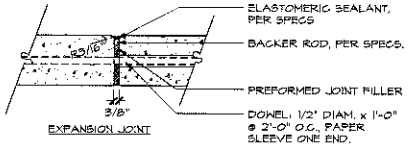

3/34 WATER TIGHT EXPANSION JOINT

0 1/4' 1/2' 1'

01020-water tight exp jnt.dwg

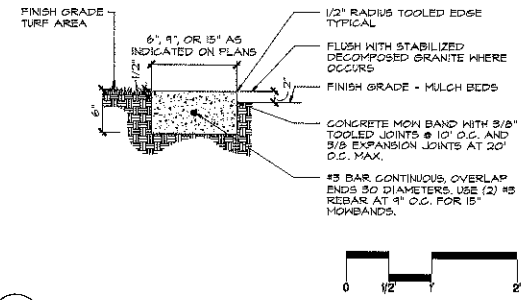

0 1/2' 1' 2'

4/34 CONCRETE MOWBAND

12.051 CONCRETE MOWBAND_PLAY.DWG

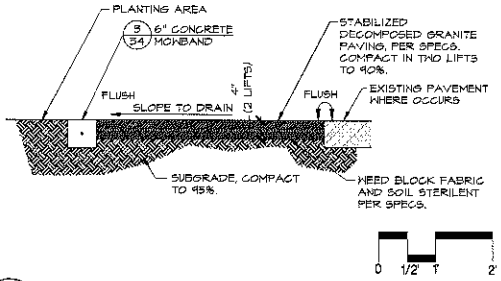

0 1/2' 1' 2'

5/34 STABILIZED DECOMPOSED GRANITE

12051_DECOMPOSED GRANITE.DWG

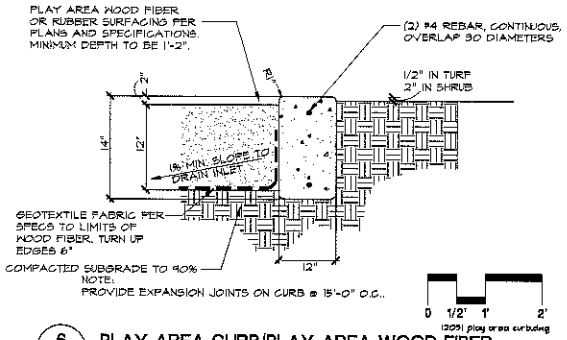

NOTE:
PROVIDE EXPANSION JOINTS ON CURB @ 15'-0" O.C..

0 1/2' 1' 2'

12051 play area curb.dwg

6/34 PLAY AREA CURB/PLAY AREA WOOD FIBER

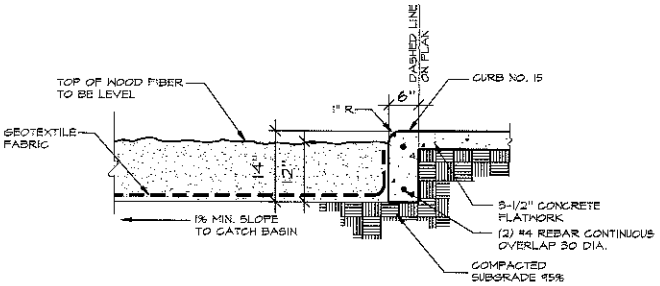

NOTE:
PLAY AREA CURB AND CONCRETE FLATWORK SHALL BE A MONOLITHIC POUR. DO NOT SCORE 6' PLAY AREA CURB.

7/34 PLAY AREA CURB AT CONCRETE PAVEMENT

N.T.S.

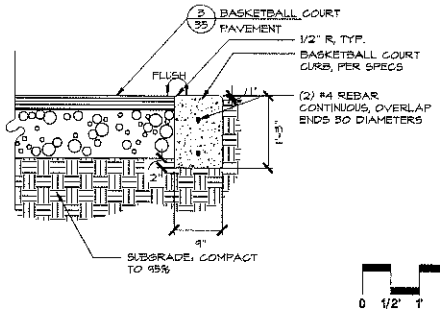

0 1/2' 1' 2'

8/34 BASKETBALL COURT CURB

811 Know what's below. Call before you dig.

Callander Associates Landscape Architecture, Inc.
3130 Bel Centro Drive, Suite 106
Rancho Cordova, CA 95670
T 916.635.1313
F 916.635.9132

CA PROJECT NO. 12.051

BUILDING DEPARTMENT SUBMITTAL

CITY OF SACRAMENTO
PARKS AND RECREATION DEPARTMENT
PARK, PLANNING, DESIGN, & DEVELOPMENT
LANDSCAPE ARCHITECTURE SECTION
915 I STREET, 5TH FLOOR,
SACRAMENTO, CA 95814

McCLATCHY PARK - L19136500

McCLATCHY PARK RENOVATION
CONSTRUCTION DETAILS

LANDSCAPE ARCHITECT: BW
DESIGN BY/DRAWN BY: DM/BG
CAD FILE: 12.051
DATE: 7/26/13
SCALE:
CAD SCALE:
P.N. L19136500
REVISIONS

SHEET NO. 34 OF 52

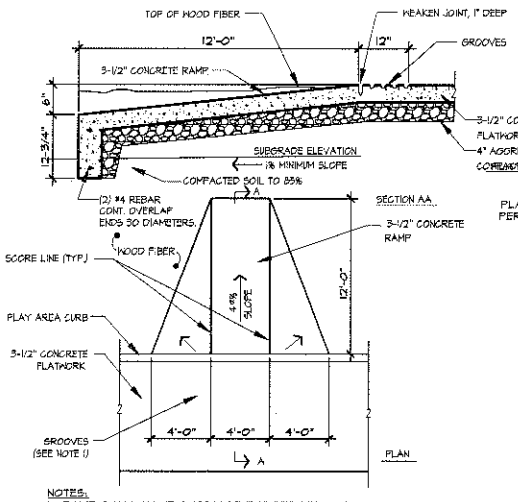

NOTES:
1. RAMP SHALL HAVE A 12" WIDE BORDER WITH GROOVES APPROX. 3/4" O.C., AND 1/4" WIDE BY 1/4" DEEP.
2. SURFACE OF RAMP SHALL BE A TRANSVERSE BROOMED SURFACE TEXTURE ROUGHER THAN SURROUNDING SIDEWALK.

1/35 PLAY AREA RAMP

N.T.S.

CRITICAL FALL HEIGHT	RUBBER TOTAL DEPTH
4'	1 3/4"
5'	2"
6'	2 1/2"
7'	3"
8'	3 1/2"

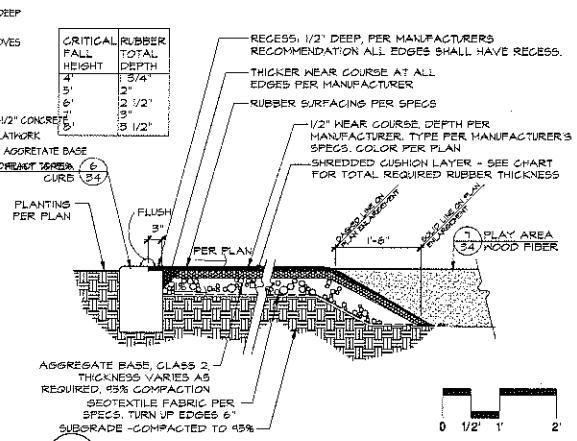

2/35 PLAY AREA RUBBER SURFACING

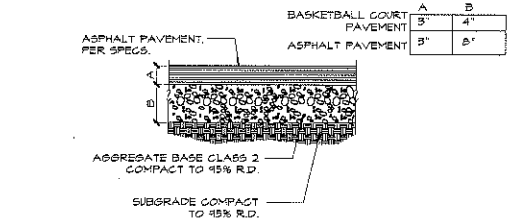

3/35 ASPHALT AND BASKETBALL COURT PAVEMENT

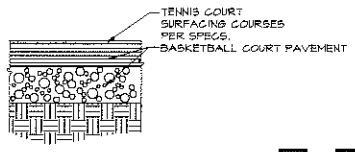

4/35 TENNIS COURT SURFACING

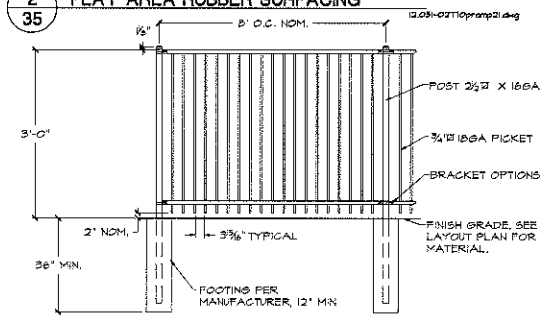

5/35 PLAY AREA FENCE

N.T.S.

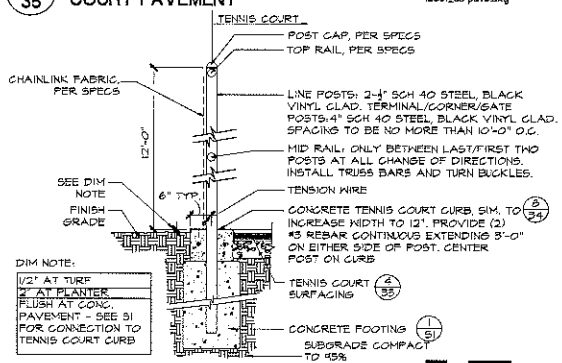

DIM NOTE:

1/2" AT TURF
2" AT PLANTER
FLUSH AT CONC. PAVEMENT - SEE S1 FOR CONNECTION TO TENNIS COURT CURB

6/35 TENNIS COURT FENCING

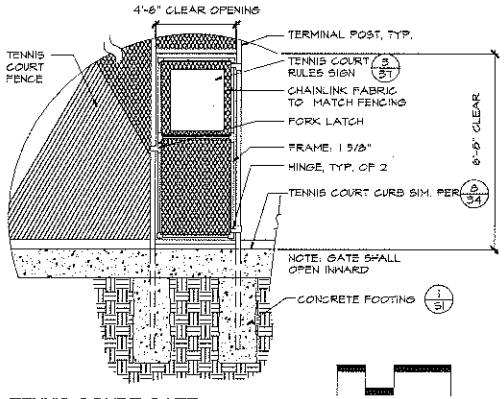

7/35 TENNIS COURT GATE

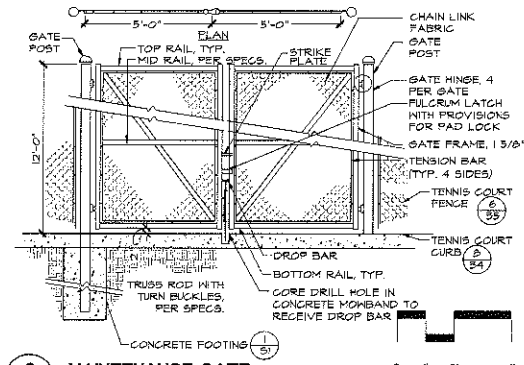

8/35 MAINTENANCE GATE

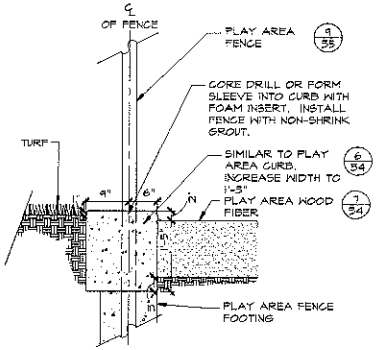

9/35 PLAY AREA FENCE AT PLAY AREA CURB

811 Know what's below. Call before you dig.

CA PROJECT NO. 12.051

Gillender Associates Landscape Architecture, Inc.

BUILDING DEPARTMENT SUBMITTAL

CITY OF SACRAMENTO
PARKS AND RECREATION DEPARTMENT
PARK, PLANNING, DESIGN, & DEVELOPMENT
LANDSCAPE ARCHITECTURE SECTION
915 I STREET, 5TH FLOOR
SACRAMENTO, CA 95814
McCLATCHY PARK - L19136500

McCLATCHY PARK RENOVATION
CONSTRUCTION DETAILS

LANDSCAPE ARCHITECT: BH
DESIGN BY/DRAWN BY: DM/BC
CAD FILE: 12.051
DATE: 7/26/13
SCALE:
CAD SCALE:
P.N.: L19136500
REVISIONS:

SHEET NO. 35 OF 52

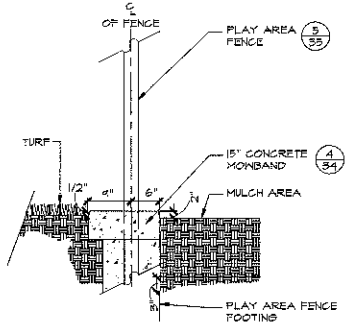

1/36 PLAY AREA FENCE AT MOWBAND

PLAY AREA FENCE AT 15" MOWBAND.dwg

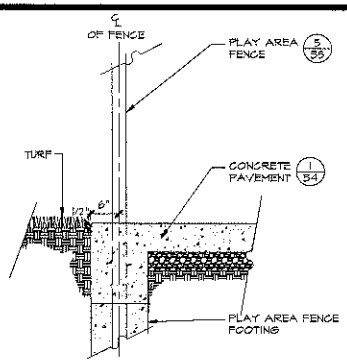

2/36 PLAY AREA FENCE AT CONCRETE PAVEMENT

©2022pm14.dwg

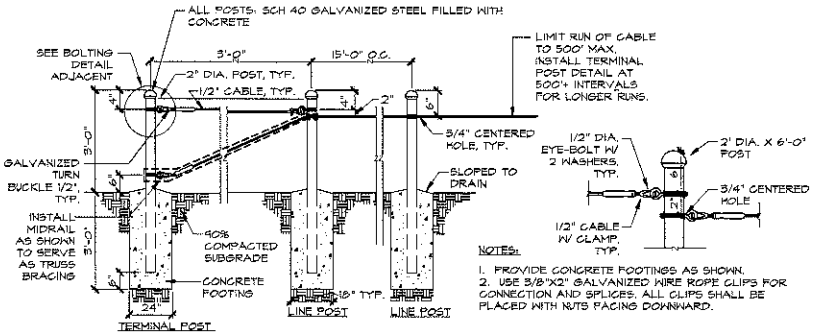

N.T.S.

©2022pc1.dwg

3/36 POST AND CABLE FENCE

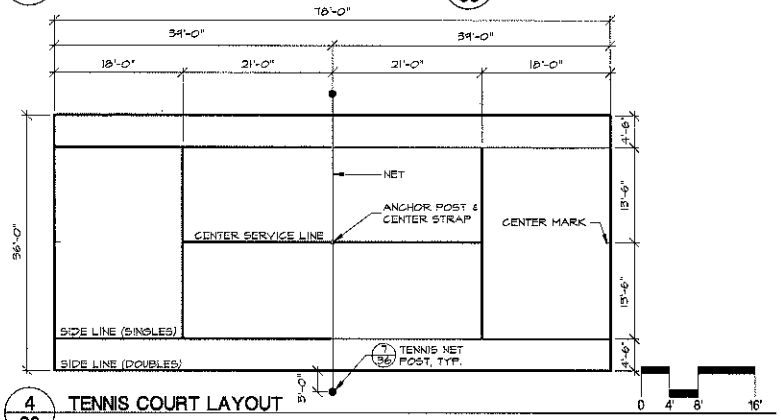

4/36 TENNIS COURT LAYOUT

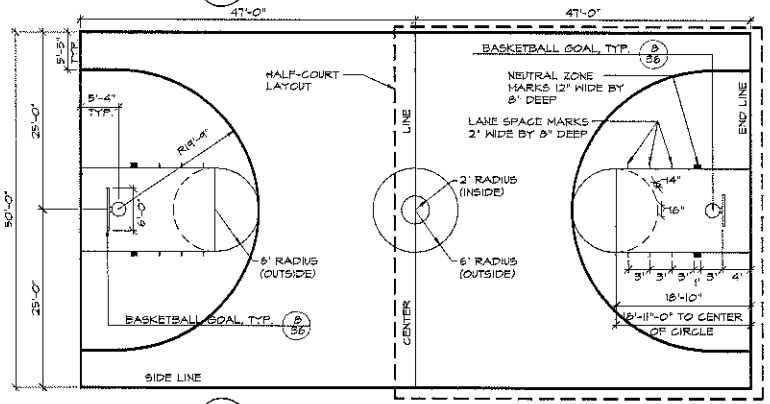

5/36 BASKETBALL COURT LAYOUT

N.T.S.

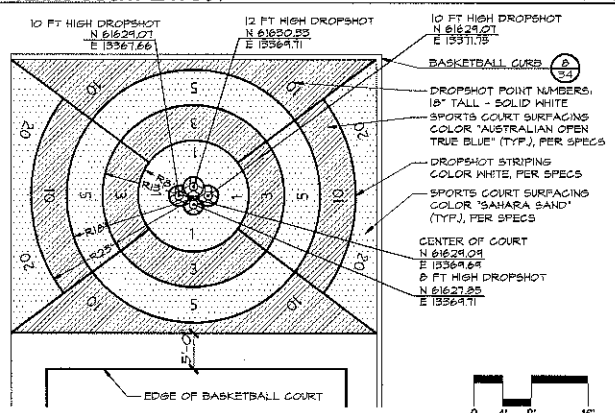

6/36 DROP SHOT LAYOUT

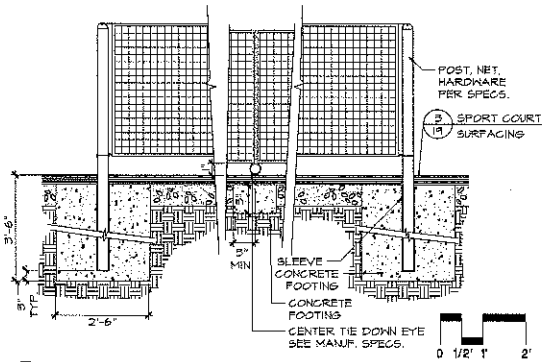

7/36 TENNIS COURT NET AND POSTS

12051_tll66tennisnet6.dwg

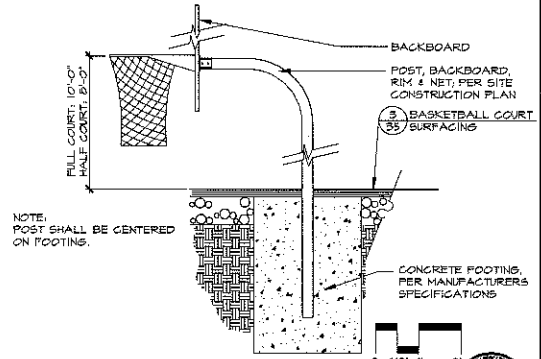

8/36 BASKETBALL GOAL

12.051_basketballgoal.dwg

811 Know what's below. Call before you dig.

Callander Associates Landscape Architecture, Inc.
13130 Sun Center Drive, Suite 104
Rancho Cordova, CA 95670
T: 916.851.1333
F: 916.852.1132

CA PROJECT NO. 12.051

BUILDING DEPARTMENT SUBMITTAL

CITY OF SACRAMENTO
PARKS AND RECREATION DEPARTMENT
PARK PLANNING, DESIGN, & DEVELOPMENT
LANDSCAPE ARCHITECTURE SECTION
915 I STREET, 5TH FLOOR,
SACRAMENTO, CA 95814

McCLATCHY PARK - L19036500

McCLATCHY PARK RENOVATION
CONSTRUCTION DETAILS

LANDSCAPE ARCHITECT: BH
DESIGN BY/DRAWN BY: DM/BC
CAD FILE: 12.051
DATE: 7/26/22
SCALE:
CAD SCALE:
P.N.: L19036500
REVISIONS:

SHEET NO. 36 OF 52

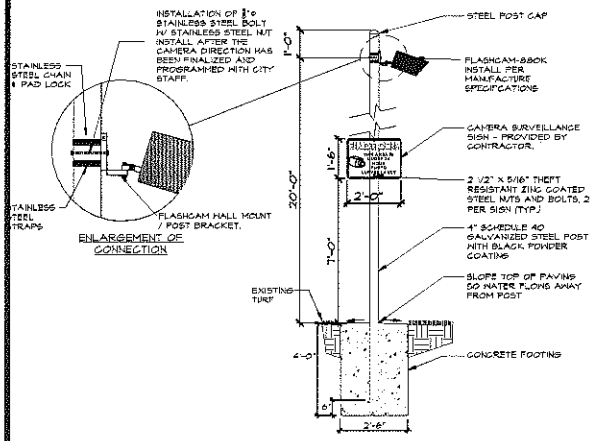

1/37 SECURITY CAMERA N.T.S.

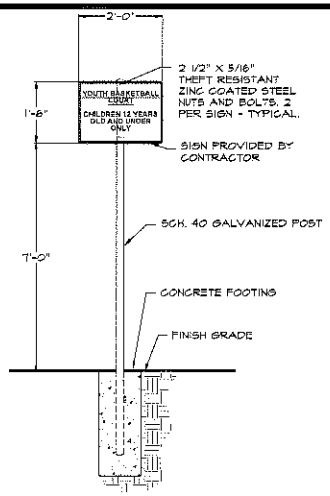

2/37 HALF BASKETBALL COURT SIGN N.T.S.

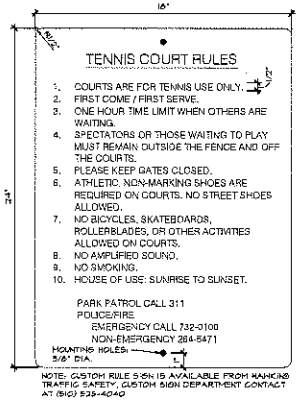

3/37 TENNIS COURT RULES SIGN

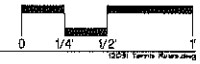

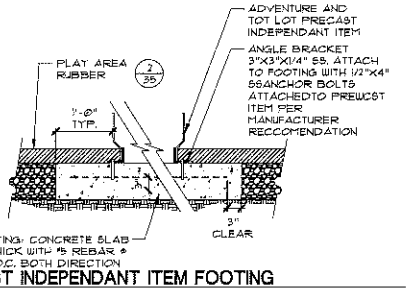

4/37 PRECAST INDEPENDANT ITEM FOOTING

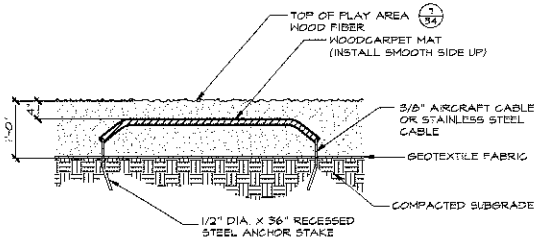

5/37 RUBBER MAT UNDER SWINGS

BUILDING DEPARTMENT SUBMITTAL

CITY OF SACRAMENTO
PARKS AND RECREATION DEPARTMENT
PARK, PLANNING, DESIGN & DEVELOPMENT
LANDSCAPE ARCHITECTURE SECTION
915 I STREET, 5TH FLOOR,
SACRAMENTO, CA 95814
McCLATCHY PARK - L19136500

McCLATCHY PARK RENOVATION
CONSTRUCTION DETAILS

LANDSCAPE ARCHITECT: BN
DESIGN BY/DRAWN BY: DM/JB
CAD FILE: 12.051
DATE: 7/26/13
SCALE:
CAD SCALE:
P.N. L19136500
REVISIONS:

SHEET NO. 37 OF 52

811 Know what's below. Call before you dig.

Callander Associates Landscape Architecture, Inc.

CA PROJECT NO. 12.051

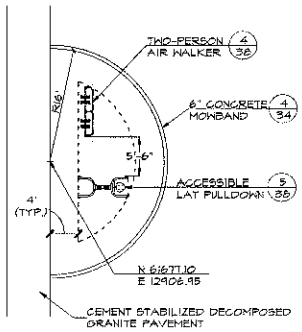

1/38 FITNESS AREA #1
ENLARGEMENT

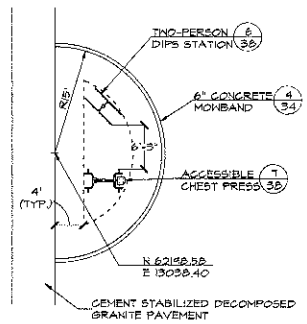

2/38 FITNESS AREA #2
ENLARGEMENT

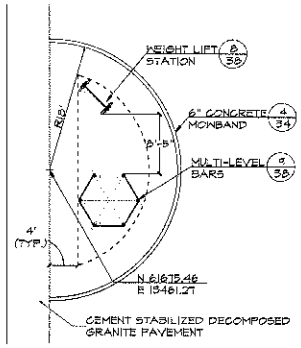

3/38 FITNESS AREA #3
ENLARGEMENT

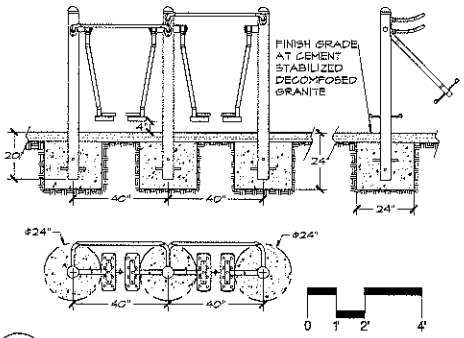

4/38 TWO-PERSON AIR WALKER FOOTINGS

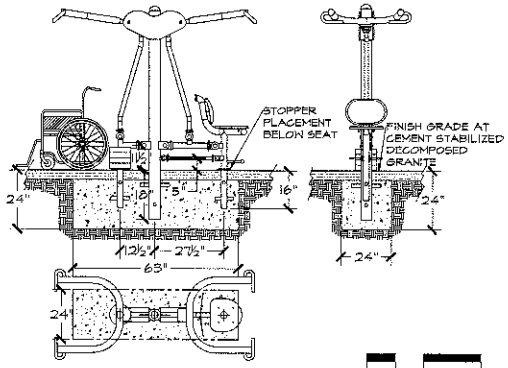

5/38 ACCESSIBLE LAT PULLDOWN FOOTINGS

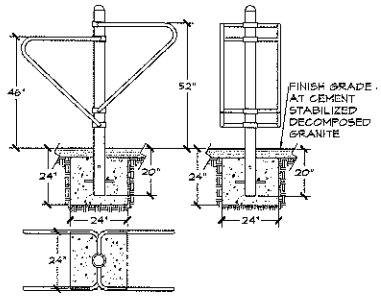

6/38 TWO-PERSON DIPS STATION FOOTINGS

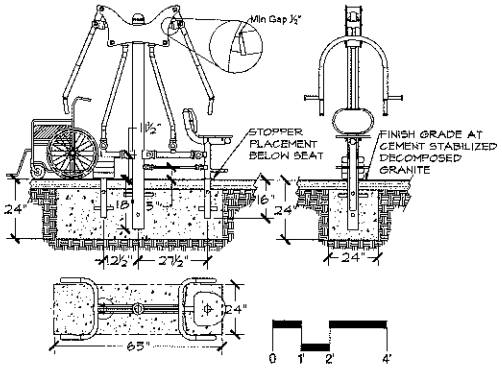

7/38 ACCESSIBLE CHEST PRESS FOOTINGS

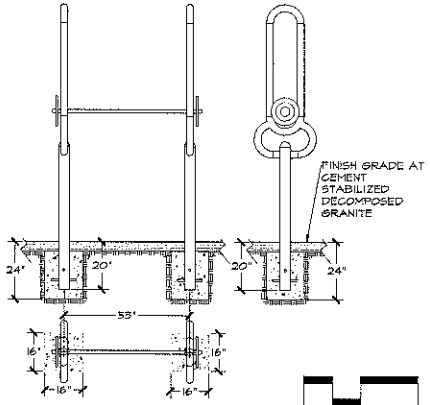

8/38 WEIGHT LIFT FOOTINGS

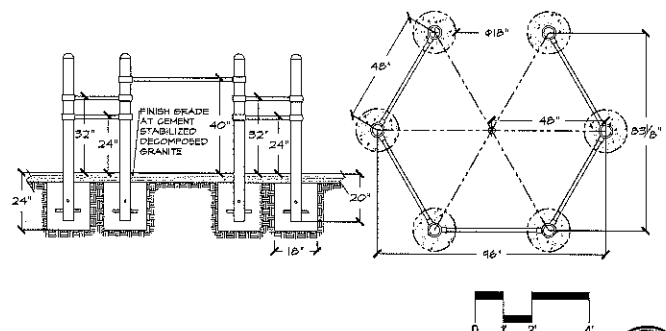

4/38 MULTI-LEVEL BARS FOOTINGS

811 Call before you dig.

CA PROJECT NO. 12.051

BUILDING DEPARTMENT SUBMITTAL

CITY OF SACRAMENTO
PARKS AND RECREATION DEPARTMENT
PARK, PLANNING, DESIGN, & DEVELOPMENT
LANDSCAPE ARCHITECTURE SECTION
915 I STREET, 5TH FLOOR,
SACRAMENTO, CA 95814

McCLATCHY PARK - L19136500

McCLATCHY PARK RENOVATION
CONSTRUCTION DETAILS

LANDSCAPE ARCHITECT: BH
DESIGN BY/DRAWN BY: DM/BC
CAD FILE: 12.051
DATE: 7/28/15
SCALE:
CAD SCALE:
P.N.: L19136500
REVISIONS:

SHEET NO. 38 OF 52

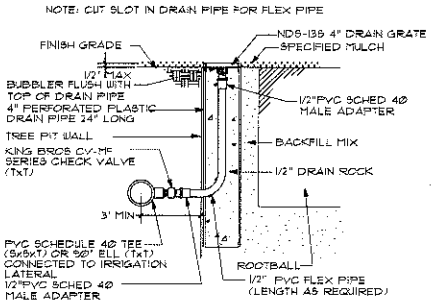

1 / 39 **TREE BUBBLER** N.T.S.

12051-Bubbler2-1.dwg

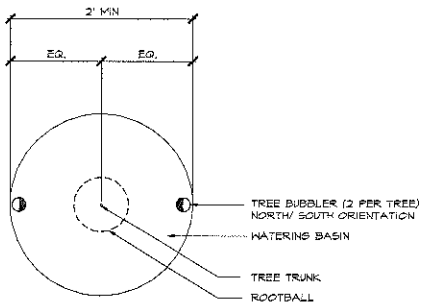

2 / 39 **TREE BUBBLER** N.T.S.

12051 TREE BUBBLER PLAN

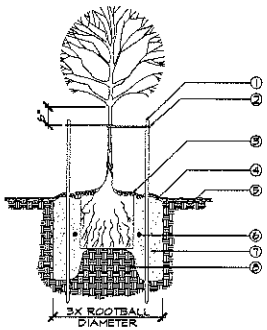

1. TREE STAKES, 2"ø X 8'-0" LODGEPOLE PINE, 2 PER TREE, EAST/ WEST ORIENTATION, CUT STAKES 2" ABOVE HIGHEST RUBBER TRE TIE.
2. RUBBER TREE TIES, 2 PER STAKE, WRAP NO WIRE AROUND TRUNK OR LIMB.
3. MULCH, 2"-4" LAYER.
4. 3" HIGH EARTH WATERING BERM IN PLANTER AREA ONLY.
5. FINISH GRADE, KEEP ROOT CROWN 2" ABOVE FINISH GRADE.
6. PLANT TABS, SEE SPECIFICATIONS.
7. PREPARED BACKFILL, SEE SPECIFICATIONS.
8. EXISTING UNDISTURBED SOIL.

3 / 39 **TREE PLANTING** N.T.S.

12051 TREE PLANTING REVISED.DWG

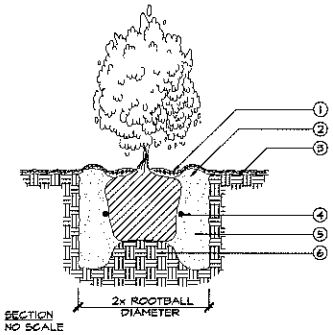

SECTION
NO SCALE

1. 3" LAYER OF APPROVED MULCH.
2. 2" HIGH EARTH MOUND.
3. FINISH GRADE: PLANT ROOT CROWN 1" ABOVE FINISH GRADE.
4. FERTILIZER TABLETS - SEE SPECIFICATIONS.
5. PREPARED BACKFILL, SEE SPECIFICATIONS.
6. PLACE ROOTBALL ON SMALL MOUND OF TAMPED/ FIRM TOPSOIL.

4 / 39 **SHRUB PLANTING** N.T.S.

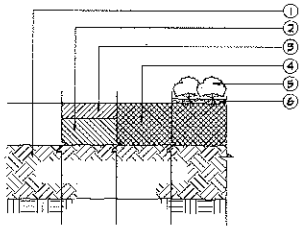

SECTION
NO SCALE

1. RIP OR SCARIFY TOP 12" OF SUBGRADE.
2. ADD 6" OF IMPORTED TOPSOIL. TOPSOIL SHALL BE PHYSICALLY AND CHEMICALLY COMPATIBLE WITH SUBSOIL.
3. ADD AMENDMENTS AND FERTILIZER PER SOILS REPORT.
4. ROTOTILL AMENDMENTS INTO IMPORTED TOPSOIL.
5. PLANT GROUNDCOVER: TRIANGULAR SPACING (SEE PLAN).
6. ADD 3" OF APPROVED MULCH.

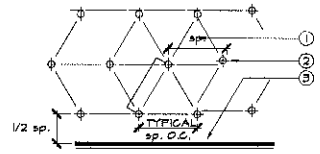

1. GROUNDCOVER SPACING: SEE PLANTING LEGEND.
2. GROUNDCOVER CENTERS.
3. WALL, WALK OR EDGE OF GROUNDCOVER PLANTING.

PLAN
NO SCALE

5 / 39 **GROUNDCOVER SPACING** N.T.S.

BUILDING DEPARTMENT SUBMITTAL

CA PROJECT NO. 12.051

Callander Associates Landscape Architecture, Inc.

CITY OF SACRAMENTO
PARKS AND RECREATION DEPARTMENT
PARK, PLANNING, DESIGN & DEVELOPMENT
LANDSCAPE ARCHITECTURE SECTION
915 I STREET, 5TH FLOOR,
SACRAMENTO, CA 95814
McCLATCHY PARK - L19136500

McCLATCHY PARK RENOVATION
CONSTRUCTION DETAILS

LANDSCAPE ARCHITECT: BN
DESIGN BY/DRAWN BY: DM/JB
CAD FILE: 12.051
DATE: 7/26/13
SCALE:
CAD SCALE:
P.N.: L19136500
REVISIONS:

SHEET NO. 39 OF 52

poligon FABRIC

PROJECT NAME: McCLATCHY PARK

PROJECT LOCATION: SACRAMENTO, CA

BUILDING TYPE: 1HIP 30X35

FABRIC TYPE: SHADE

JOB NUMBER: Y1500

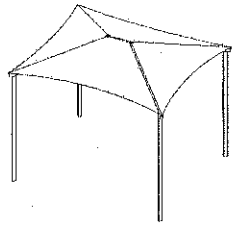

DRAWING LIST:

SHEET NUMBER	DRAWING DESCRIPTION
CS	COVER SHEET
1	ARCHITECTURAL ELEVATIONS
2-2.1	ANCHOR AND FOOTING LAYOUT / DETAILS
3	STRUCTURAL FRAMING PLAN
4-4.1	FRAME CONNECTION / DETAILS
5	FABRIC LAYOUT
6	FABRIC DETAILS

MANUFACTURER NOTES:

MATERIALS:

FABRIC STYLE	ADTM DESIGNER
FABRIC STYLE	ADTM DESIGNER
COATING	ADTM DESIGNER
FABRIC COLOR	TAN
FRAME TUBE COLOR (PRIMER)	ASTM-DRAWING 60
FRAME TUBE COLOR (FINISH)	TAN
HIGH FRAME FITTING	ASTM
ANCHOR BOLTS	SEE SHEET 2.1

GENERAL NOTES:

[illegible]

DESIGN CRITERIA:

GENERAL:
25.0 PSI (PER IBC & ASCE/SEI 7-05)
OCCUPANCY CATEGORY: I

DEAD LOAD:
FABRIC PER TENSIONING: 10 lb/ft
FRAME DEAD LOAD: 2.0 LF WEIGHT

LIVE LOAD:
ROOF LIVE LOAD: 20 PSF

SNOW DESIGN DATA:
GROUND SNOW LOAD (Pg): 6 PSF
FLAT ROOF SNOW LOAD (Pf): 5 PSF
SNOW EXPOSURE FACTOR (Ce): 1.0
SNOW LOAD IMPORTANCE FACTOR (Is): 0.8
THERMAL FACTOR (Ct): 1.2

WIND DESIGN DATA:
BASIC WIND SPEED: 85 MPH
WIND EXPOSURE FACTOR: 0.85
WIND IMPORTANCE FACTOR: 0.87
INTERNAL PRESSURE COEFFICIENT (GCpi): 0
WIND EXPOSURE: C

SEISMIC DESIGN DATA:
CANTILEVERED COLUMN SYSTEMS DETAILED TO ACCOMMODATE SEISMIC FORCES
SEISMIC IMPORTANCE FACTOR (Ie): 1.0
SEISMIC DESIGN CATEGORY: B
SITE CLASS: D

FABRIC DESIGN CONSIDERATIONS:
FABRIC SNOW LOAD (Ps): 0 psf
FABRIC BASIC WIND SPEED (V): 72 MPH

WARNING:
FABRIC TOP SHEET MUST BE REMOVED IN/OR IN ANY SNOW ACCUMULATION.
FABRIC TOP MUST BE REMOVED IN EVENT OF HIGH SUSTAINED WIND.

REVISIONS

REV.	DESCRIPTION	DATE	APPROVED
A	DRAWING RE-CUSTOMIZE	KRYSTAL	KV
B	REVISED DIMENSIONS PER SITE VISIT	7/12/2012	TP

poligon FABRIC — 1-877-765-4422 — www.poligonfabric.com — w/PORTER GROUP

McCLATCHY PARK — SACRAMENTO, CA — INSTALLATION PLAN — CS

CS

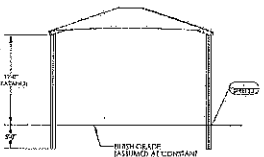

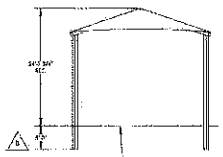

poligon FABRIC — 1-877-765-4422 — www.poligonfabric.com — w/PORTER GROUP

McCLATCHY PARK — SACRAMENTO, CA — ARCHITECTURAL ELEVATIONS

1

COLUMN AND FOOTING LAYOUT NOTES:

1. COLUMNS MUST BE CENTERED IN FOOTINGS
2. FOOTINGS MUST BE SUNKEN TO ALIGN WITH COLUMN AND TRUSS CENTERLINE.

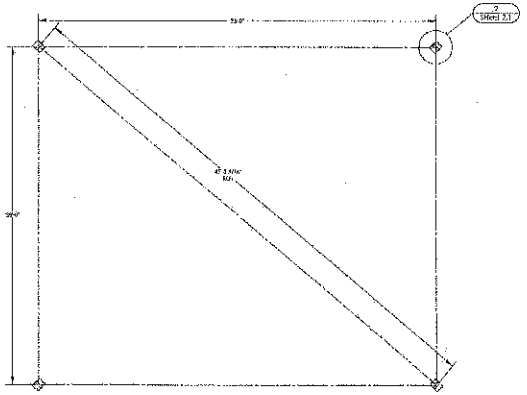

poligon FABRIC — 1-877-765-4422 — www.poligonfabric.com — w/PORTER GROUP

McCLATCHY PARK — SACRAMENTO, CA — ANCHOR LAYOUT

2

FOUNDATION NOTES:

1. ALL CONCRETE MIX DESIGNS MUST WELL CONFORM TO THE REQUIREMENTS OF THE WATER COURT, AS FOR ALL CONCRETE USE IN FUTURE, AND ALL APPLICABLE STATE & LOCAL CODES, LAWS AND REGULATIONS.
2. THE CONCRETE IS CONSIDERED BASED ON THE FOLLOWING PROPERTIES:
   - 28 DAY CONCRETE
   - 28 DAY STRENGTH
3. THE FOOTING SHALL BEARTON COMPETENT UNDISTURBED SOIL OR ON COMPACTED FILL. IF SOIL OF QUESTIONABLE BEARING CAPACITY IS ENCOUNTERED, OR IF WATER TABLE IS OF OTHER POSSIBLE UNFAVORABLE CONDITIONS ARE FOUND, NOTIFICATION OF THE FOUNDATION ENGINEER OF RECORD IS REQUIRED FOR A CHANGE IN CONDITIONS.
4. ALL FOOTINGS SHALL WELL SHALL CONFORM TO THE REQUIREMENTS OF ASTM A615, GRADE 60.
5. IF FOOTING DEPTH DIAGRAMS DO NOT MEET LOCAL FROST REQUIREMENTS, THE DRILLING WILL FOOTING MAY BE EXTENDED, EXCAVATED MATERIAL CAN BE REPLACED AND REMOVE ADDITIONAL TIES TO MEET THE MINIMUM REQUIREMENTS AS SHOWN IN THE DRAWINGS. CONTACT ENGINEER OF RECORD TO VERIFY THAT NEW FOOTING DEPTH MEETS ENGINEERING REQUIREMENTS.

FOUNDATION DESIGN CRITERIA PROVIDED BY POLIGON FABRIC IS BASED ON THE ASSUMPTION THAT THE FOOTING WILL BE CONSTRUCTED IN ACCORDANCE WITH THE CITY OF SACRAMENTO, CALIFORNIA, BUILDING CODE, AND ALL ASCE 7-05 & THE 2010 CALIFORNIA BUILDING CODE (CBC) 2010 ALL BUILDINGS.

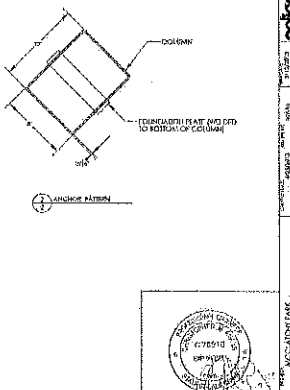

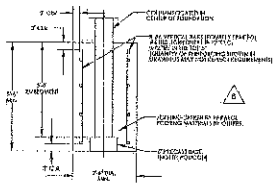

DRILLED SHAFT ROUND FOOTING OPTION

poligon FABRIC — 1-877-765-4422 — www.poligonfabric.com — w/PORTER GROUP

McCLATCHY PARK — SACRAMENTO, CA — ANCHOR AND FOOTING DETAILS

2.1

811 Know what's below. Call before you dig.

Callander Associates Landscape Architecture, Inc.
3130 Sun Center Drive, Suite 104
Roseville, California, CA 95678
T 916.663.3312
F 916.663.3742

CA PROJECT NO. 12.051

BUILDING DEPARTMENT SUBMITTAL

CITY OF SACRAMENTO
PARKS AND RECREATION DEPARTMENT
PARK, PLANNING, DESIGN, & DEVELOPMENT
LANDSCAPE ARCHITECTURE SECTION
915 I STREET, 5TH FLOOR,
SACRAMENTO, CA 95814

McCLATCHY PARK - L19136500

McCLATCHY PARK RENOVATION
SHADE CANOPY
ADD ALTERNATE #1

LANDSCAPE ARCHITECT: BW
DESIGN BY/DRAWN BY: DM/BC
CAD FILE: 12.051
DATE: 7/26/12
SCALE: N.T.S.
CAD SCALE:
F.N. L19136500
REVISIONS

SHEET NO 40 OF 52

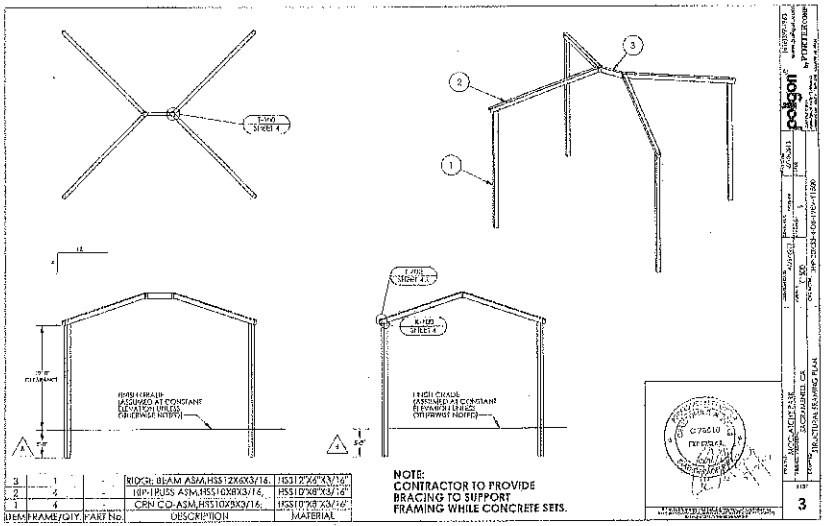

ITEM	FRAME/QTY.	PART No.	DESCRIPTION	MATERIAL
3	1	-	RIDGE BEAM ASM,HSS12X6X3/16,	HSS12"X6"X3/16"
2	4	-	10P-1 PUSS ASM,HSS10X8X3/16,	HSS10"X8"X3/16"
1	4	-	CRN CO-ASM,HSS10X8X3/16,	HSS10"X8"X3/16"

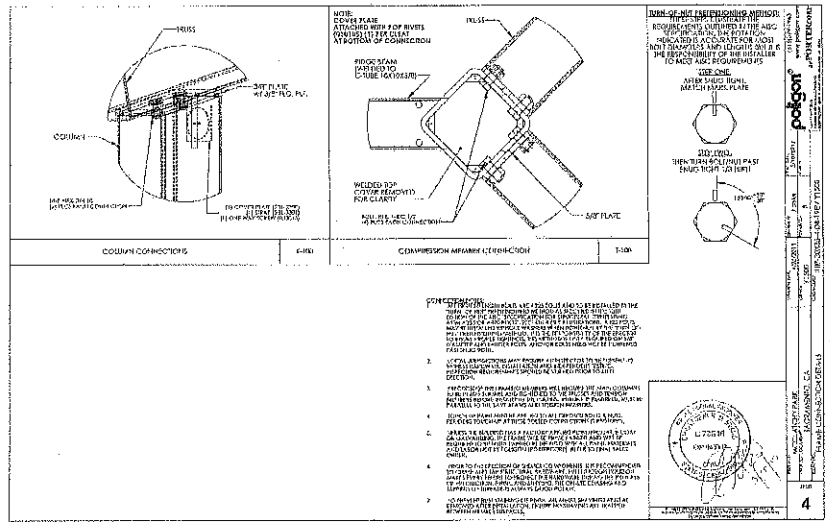

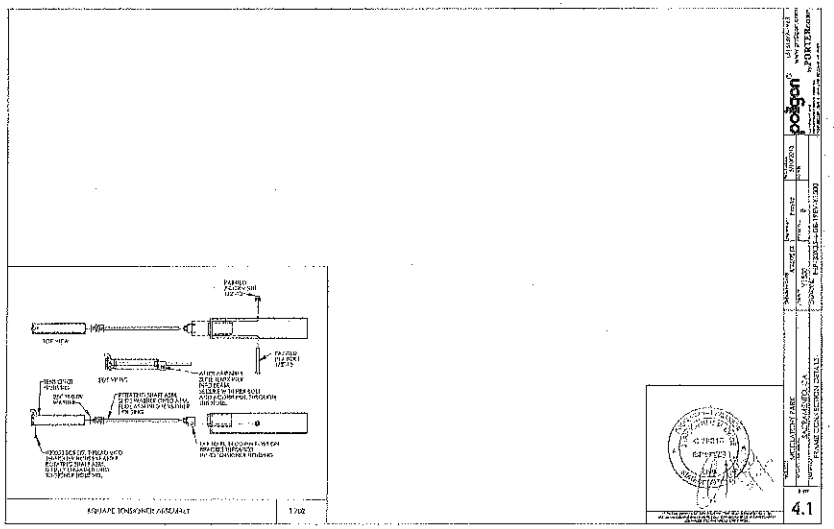

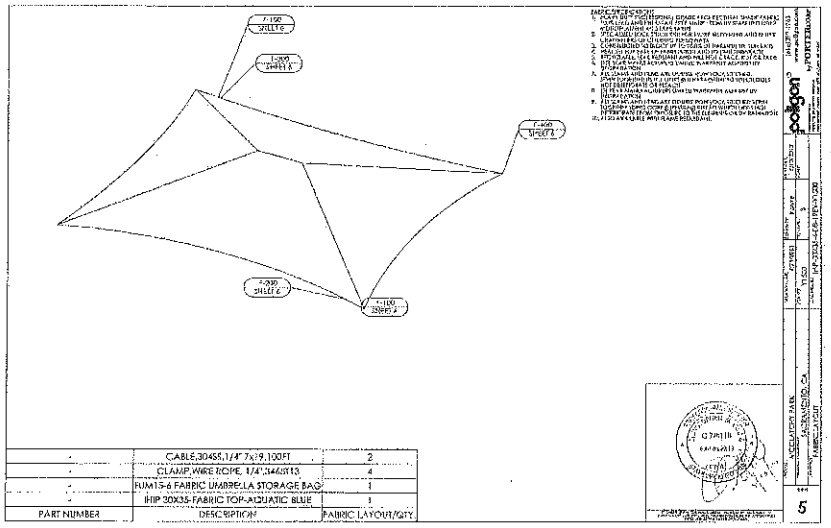

PART NUMBER	DESCRIPTION	FABRIC LAYOUT/QTY
	CABLE,304SS,1/4" 7x19,100FT	2
	CLAMP,WIRE ROPE, 1/4",304SS13	4
-	FUM15-6 FABRIC UMBRELLA STORAGE BAG	1
-	IHIP 30X35-FABRIC TOP-AQUATIC BLUE	1

Call before you dig. CA PROJECT NO. 12.051

Callander Associates Landscape Architecture, Inc.

BUILDING DEPARTMENT SUBMITTAL

McCLATCHY PARK RENOVATION
SHADE CANOPY
ADD ALTERNATE #1

CITY OF SACRAMENTO
PARKS AND RECREATION DEPARTMENT
PARK, PLANNING, DESIGN, & DEVELOPMENT
LANDSCAPE ARCHITECTURE SECTION
915 I STREET, 5TH FLOOR,
SACRAMENTO, CA 95814

McCLATCHY PARK - L19136500

LANDSCAPE ARCHITECT: BW
DESIGN BY/DRAWN BY: DM/BC
CAD FILE: 12.051
DATE: 7/26/13
SCALE: N.T.S.
CAD SCALE:
P.N.: L19136500
REVISIONS

SHEET NO 41 OF 52

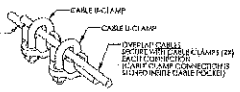

- WITH FABRIC TOP ON STRUCTURE, ASSEMBLE CABLE AND CLAMPS AS DESCRIBED ABOVE.
- HAND FEED THE CABLE IN REMAINING SPACE.
- DO NOT OVERTIGHTEN THE U-CLAMPS AROUND THE CABLE INITIALLY, TO ALLOW FINGER ADJUSTMENT.
- IT MAY BE NECESSARY TO LOOSEN THE CABLE U-CLAMPS TO ALLOW THE CABLE TO REMAIN WRINKLES.
- BEGIN TENSIONING ITERATIVELY, CHECKING UNIFORM DISTRIBUTION.
- DO NOT PERFORM TENSIONER PAST THE MAXIMUM SHOWN ON JIG.
- NOTE: THE TOP IS SUFFICIENTLY TAUT WHEN WRINKLES IN THE FABRIC HAVE BEEN REMOVED.
- TIGHTEN U-CLAMPS.

FABRIC CABLE CONNECTION | F-100

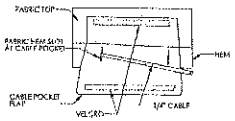

- WITH FABRIC TOP IS STILL ON THE GROUND, INSTALL STAINLESS STEEL CABLE INSIDE THE FABRIC HEM (INSIDE CABLE POCKET FLAP).
- PASS THE CABLE THROUGH THE SEWN HEM AROUND THE TOP TO HEM SLOT.

FABRIC CABLE INSTALLATION | F-100

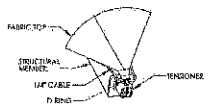

FOR ILLUSTRATION ONLY. ACTUAL PARTS MAY VARY.

THE TENSIONERS ON THE STRUCTURE ARE TO BE IN THEIR FULLY RETRACTED POSITION. CARE SHOULD BE TAKEN AS NOT TO "SNAP" THE FABRIC TOP ON ANY SHARP EDGES WHILE PULLING IT OVER THE BUILDING. HOOK THE D-RINGS AT THE CORNERS, & SIDE RINGS (AT THE HIGH POINT OF THE "PLEATS"). THEN LOOP THE CABLE AROUND THE FIXED HOOKS OF THE TENSIONERS.

REMOVAL OF THE FABRIC TOP IS A REVERSE PROCESS OF THE INITIAL INSTALLATION. LOOSEN THE TENSIONERS AND UNHOOK THE D-RINGS AND CABLE. BEFORE PULLING THE TOP TO BEND OR KINK THE CABLE DURING REMOVAL.

FABRIC CONNECTION @ TENSIONER | F-100

polygon®

DRAWN BY	
CHECKED BY	
DATE	12.08
SCALE	1" = 1'-0"
PROJECT	MCCLATCHY PARK
	SACRAMENTO, CA
	SHADE CANOPY
	FABRIC DETAILS

6

BUILDING DEPARTMENT SUBMITTAL

811 Know what's below. Call before you dig.

Callander Associates Landscape Architecture, Inc.
1110 Bee Center Drive, Suite 104
Rancho Cordova, CA 95670
T 916.851.1813
F 916.852.1180

CA PROJECT NO. 12.051

CITY OF SACRAMENTO
PARKS AND RECREATION DEPARTMENT
PARK, PLANNING, DESIGN, & DEVELOPMENT
LANDSCAPE ARCHITECTURE SECTION
915 I STREET, 5TH FLOOR,
SACRAMENTO, CA 95814

McCLATCHY PARK - L19136500

McCLATCHY PARK RENOVATION
SHADE CANOPY
ADD ALTERNATE #1

LANDSCAPE ARCHITECT: BH
DESIGN BY/DRAWN BY: DM/BG
CAD FILE: 12.051
DATE: 7/26/13
SCALE: N.T.S.
CAD SCALE:
P.N: L19136500
REVISIONS:

SHEET NO. 42 OF 52

poligon®

DRAWING LIST:

SHEET NUMBER	DRAWING DESCRIPTION
CS	COVER SHEET
1	ARCHITECTURAL RENDERING
2-2.1	ANCHOR AND FOOTING LAYOUT / DETAILS
3	STRUCTURAL FRAMING PLAN
4-4.1	ROOF CONNECTION DETAILS
5.0	ROOF PLAN
5.0.1	ROOF CONNECTION DETAILS

DESIGN CRITERIA:

GENERAL:
2013 CALIFORNIA BUILDING CODE
OCCUPANCY CATEGORY: I

DEAD LOAD:
ROOF PURLINS LOAD: 3 PSF
FRAME PURLINS (FOR SELF WEIGHT)

LIVE LOAD:
ROOF LIVE LOAD: 20 PSF

SNOW DESIGN DATA:
GROUND SNOW LOAD (Pg): 0 PSF
FLAT ROOF SNOW LOAD (Pf): 0 PSF
SNOW EXPOSURE FACTOR (Ce): 1.0
SNOW LOAD IMPORTANCE FACTOR (Is): 1.0
THERMAL FACTOR (Ct): 1.0

WIND DESIGN DATA:
BASIC WIND SPEED (V): 85 MPH
WIND IMPORTANCE FACTOR: 1.0
WIND EXPOSURE: C
IMPORTANCE FACTOR (Iw): 0
WIND PRESSURE COEFFICIENT (Cp): 0
WIND EXPOSURE: C

SEISMIC DESIGN DATA:
CHARTS CONFIRM GROUND SHAKING OF NEARBY TO ORDINARY MAGNITUDE
SEISMIC IMPORTANCE FACTOR (Ie): 1.0
SEISMIC DESIGN CATEGORY: C
SEISMIC HELP FLAGS: 0
SEE CALCULATIONS FOR ADDITIONAL DATA

ADDITIONAL CRITERIA:
NONE

PROJECT NAME: MCCLATCHY PARK

PROJECT LOCATION: SACRAMENTO, CA

BUILDING TYPE: REK 24X28

ROOF TYPE: MULTI-RIB

JOB NUMBER: 50267

MANUFACTURER NOTES:

BATTRAN:

[illegible]	[illegible]
[illegible]	[illegible]
[illegible]	[illegible]
[illegible]	[illegible]
[illegible]	[illegible]
[illegible]	[illegible]
[illegible]	[illegible]

GENERAL NOTES:
[illegible]

ALL WELDING OF METAL SHALL BE PERFORMED BY WELDERS HOLDING CERTIFICATES PER AWS D1.1 AND WITH WELDS CONFORMING TO AWS D1.1 OR BY AS INDICATED.

ALL WELDING OF REINFORCED BY WELDERS HOLDING CERTIFICATES PERFORMED BY WELDERS HOLDING CERTIFICATES PER AWS D1.1 OR BY AS INDICATED.

ANY SHIPPED WELDS SHALL BE PAINTED FOR ENVIRONMENTAL PROTECTION.

FOR EFFECTIVE FIELD INSTALLATION OF WIRE SLEEVES IT IS RECOMMENDED THAT THE SLEEVES BE INSTALLED AND THE ROOF PLATE BE PLACED AND THEN DRILLED AND COLLECTED AND LAID BACK ON SOLID TOP SITE OF PRODUCT.

[illegible]

CONTRACTOR:
[illegible]

poligon®
www.poligon.com
PORTER BUILDING

CS

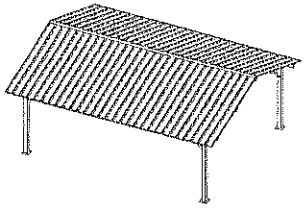

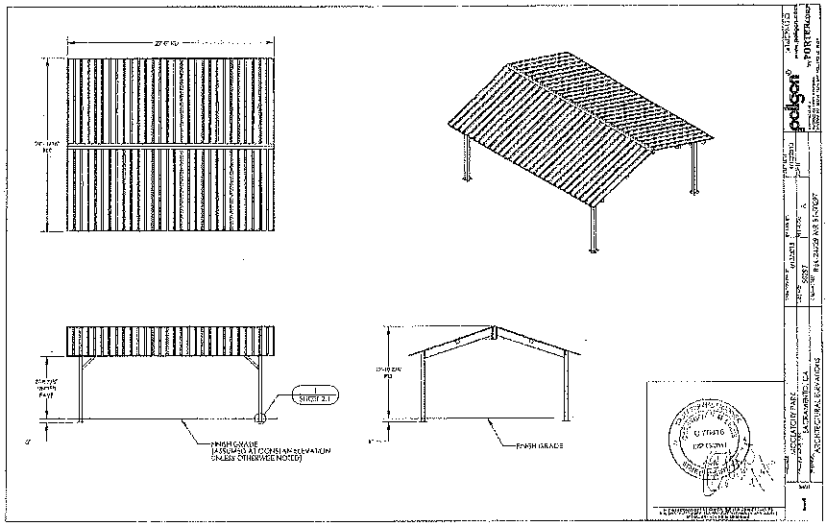

1

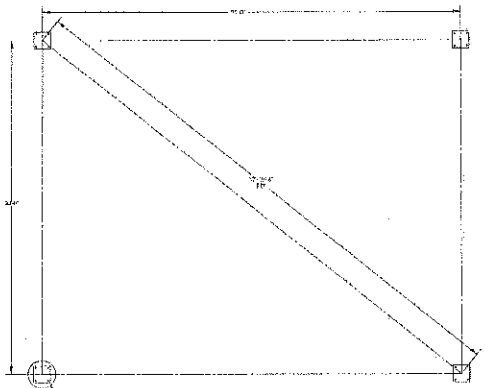

ANCHOR AND FOOTING LAYOUT NOTES:

1. ANCHORS MUST BE CENTERED IN FOOTINGS
2. FOOTINGS MUST BE TURNED TO ALIGN WITH COLUMN AND GIRDER CENTERLINE

2

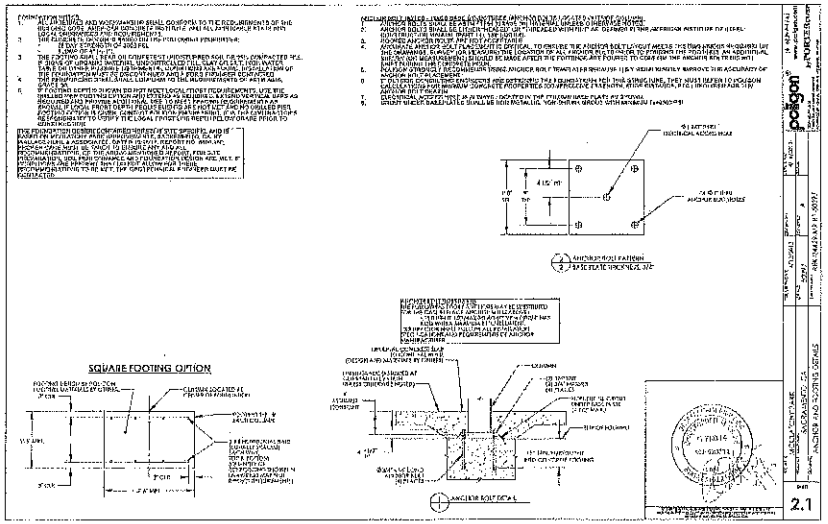

2.1

BUILDING DEPARTMENT SUBMITTAL

CITY OF SACRAMENTO
PARKS AND RECREATION DEPARTMENT
PARK, PLANNING, DESIGN, & DEVELOPMENT
LANDSCAPE ARCHITECTURE SECTION
915 I STREET, 5TH FLOOR,
SACRAMENTO, CA 95814

MCCLATCHY PARK - L19136500

MCCLATCHY PARK RENOVATION
PICNIC SHELTER

LANDSCAPE ARCHITECT: BH
DESIGN BY/DRAWN BY:
CAD FILE: 12.051
DATE: 7/26/13
SCALE: N.T.S.
CAD SCALE:
P.N.: L19136500
REVISIONS

SHEET NO. 43 OF 52

811 Know what's below. Call before you dig.

Callander Associates Landscape Architecture, Inc.
1100 Ben Street Blvd., Suite 100
Davis, California 95616
T 916.661.1810
F 916.661.1812

CA PROJECT NO. 12.051

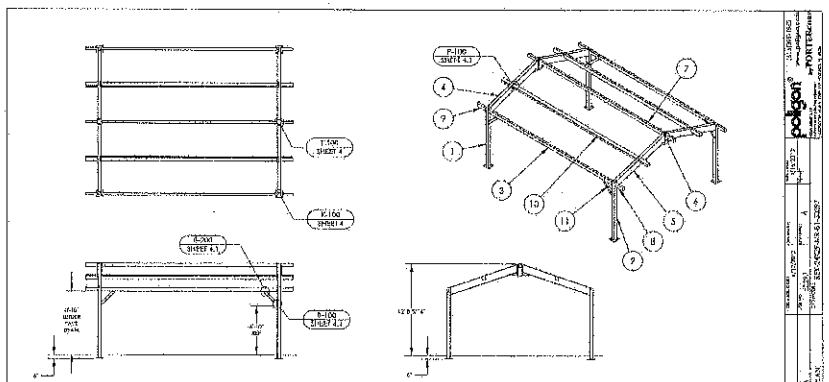

ITEM	FRAME/QTY.	Part No.	Description	Material
11	4	-	BRACE ASM	HSS5"X4"X1/8"
10	2	-	PURLIN ASM	HSS6"X6"X3/16"
9	2	-	EAVE BEAM TAIL ASM	HSS6"X4"X1/8"
8	2	-	EAVE BEAM TAIL ASM, LH	HSS6"X4"X1/8"
7	1	-	RIDGE BEAM ASM	HSS5"X4"X1/8"
6	2	-	COMPRESSION TUBE ASM	HSS8"X8"X5/8"
5	2	-	TRUSS ASM, LH	HSS12"X6"X3/16"
4	2	-	TRUSS ASM, RH	HSS12"X6"X3/16"
3	2	-	EAVE BEAM ASM	HSS6"X4"X1/8"
2	2	-	COLUMN ASM, LH	HSS8"X8"X3/16"
1	2	-	COLUMN ASM, RH	HSS8"X8"X3/16"

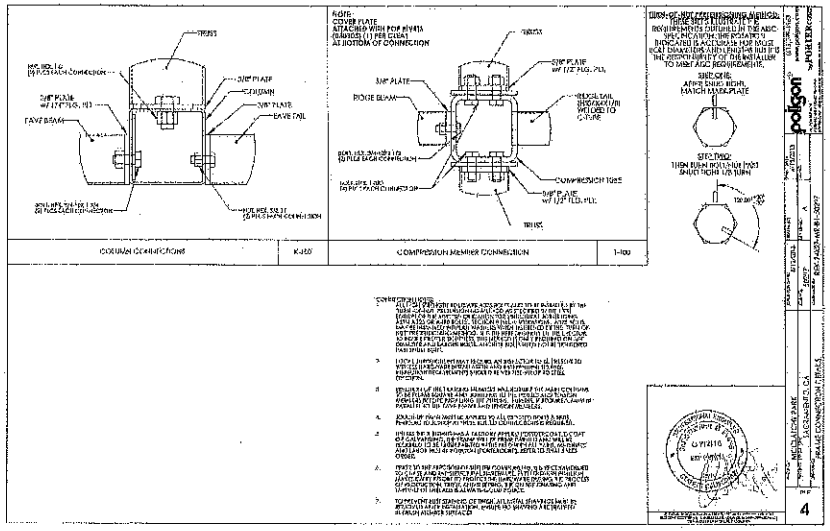

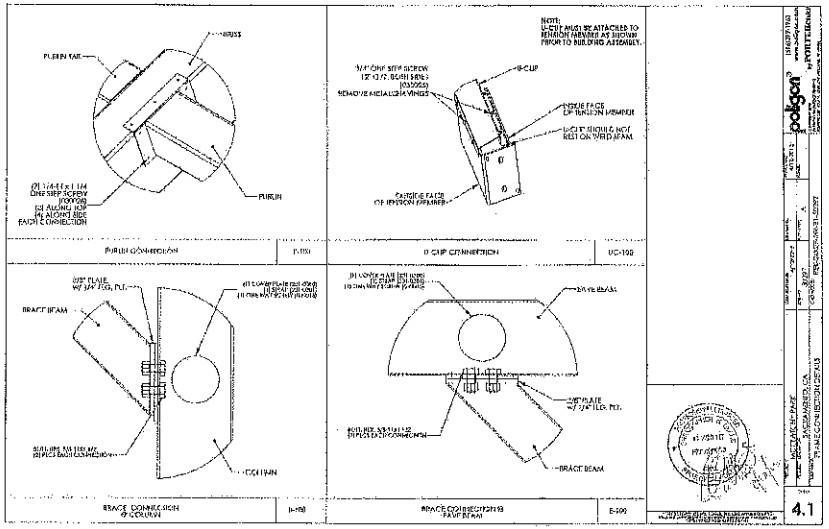

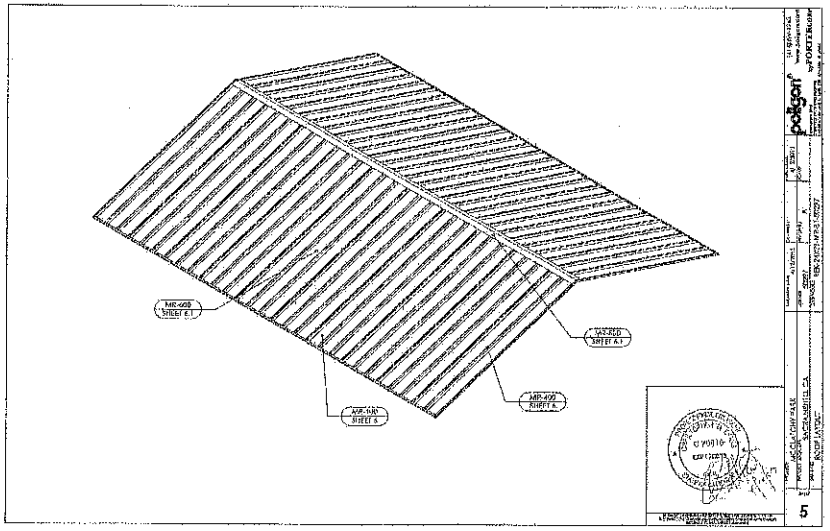

BUILDING DEPARTMENT SUBMITTAL

McCLATCHY PARK RENOVATION
PICNIC SHELTER

CITY OF SACRAMENTO
PARKS AND RECREATION DEPARTMENT
PARK PLANNING, DESIGN, & DEVELOPMENT
LANDSCAPE ARCHITECTURE SECTION
915 I STREET, 5TH FLOOR
SACRAMENTO, CA 95814
McCLATCHY PARK - L19136500

LANDSCAPE ARCHITECT: BH
DESIGN BY/DRAWN BY: DM/BC
CAD FILE: 12.051
DATE: 7/26/12
SCALE: N.T.S.
CAD SCALE:
P.N. L19136500
REVISIONS

SHEET NO. 44 OF 52

Know what's below. Call before you dig. CA PROJECT NO. 12.051

Callander Associates Landscape Architecture, Inc.

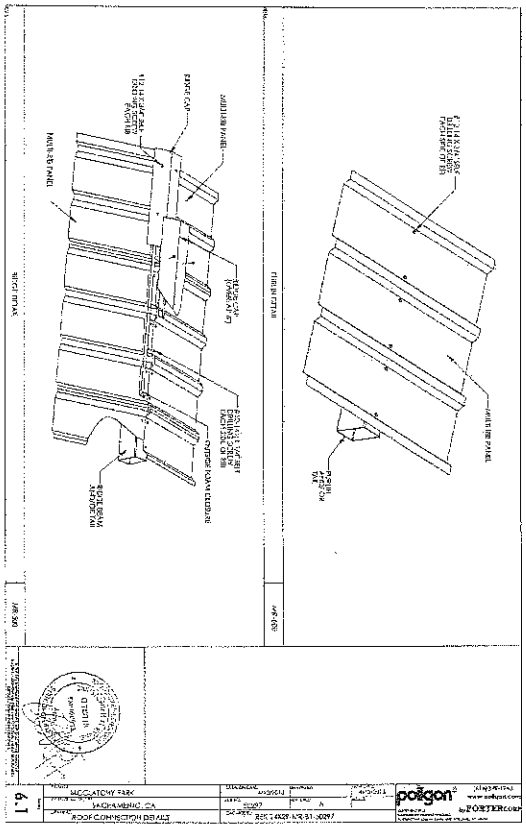

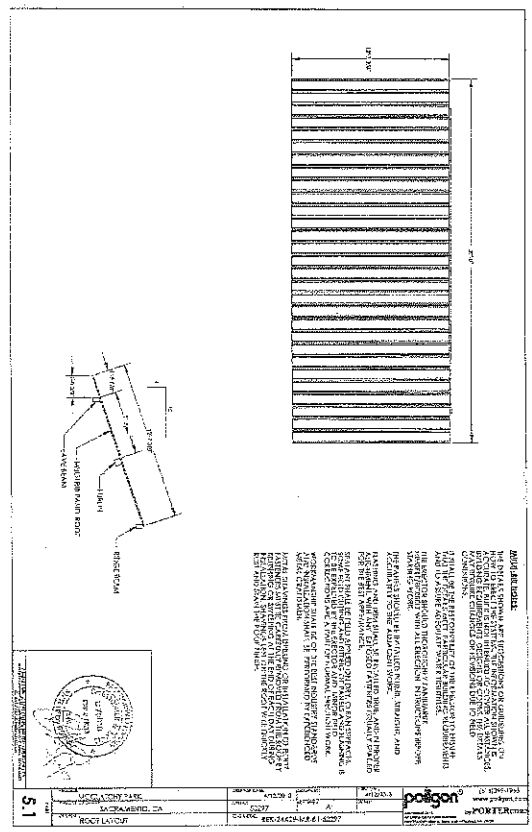

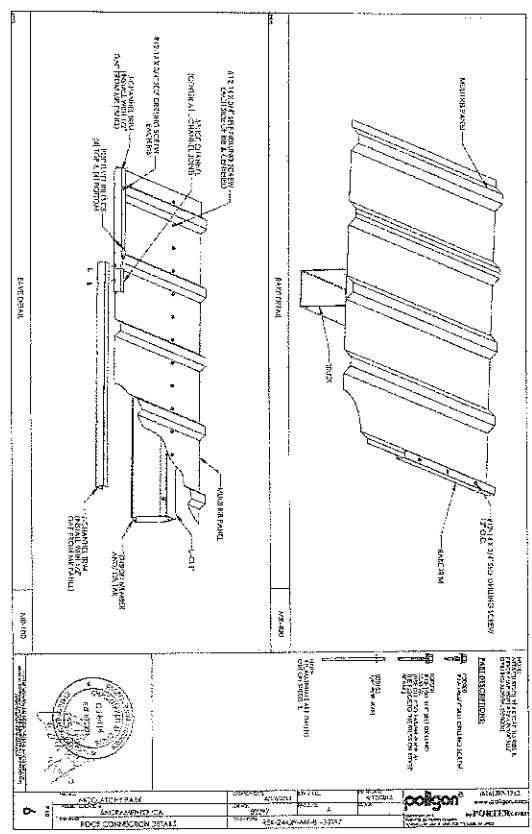

Calander Associates
Landscape Architecture, Inc.
1140 Sacramento Blvd. Suite 100
Sacramento, CA 95814
Phone: 916-442-1000
Fax: 916-442-1000
Calliston Inc. CA PROJECT NO. 12.061

BUILDING DEPARTMENT SUBMITTAL

SHEET NO. 45 OF 52

LANDSCAPE ARCHITECT BY
DESIGN BY/DRAWN BY PM/BC
CAD FILE 12051
DATE 7/26/13
SCALE N.T.S.
FAD SCALE
P.N. L19136500
REVISIONS

McCLATCHY PARK RENOVATION
PICNIC SHELTER

CITY OF SACRAMENTO
PARKS AND RECREATION DEPARTMENT
PARK, PLANNING, DESIGN, & DEVELOPMENT
LANDSCAPE ARCHITECTURE SECTION
915 I STREET, 5TH FLOOR,
SACRAMENTO, CA 95814

McCLATCHY PARK - L19136500

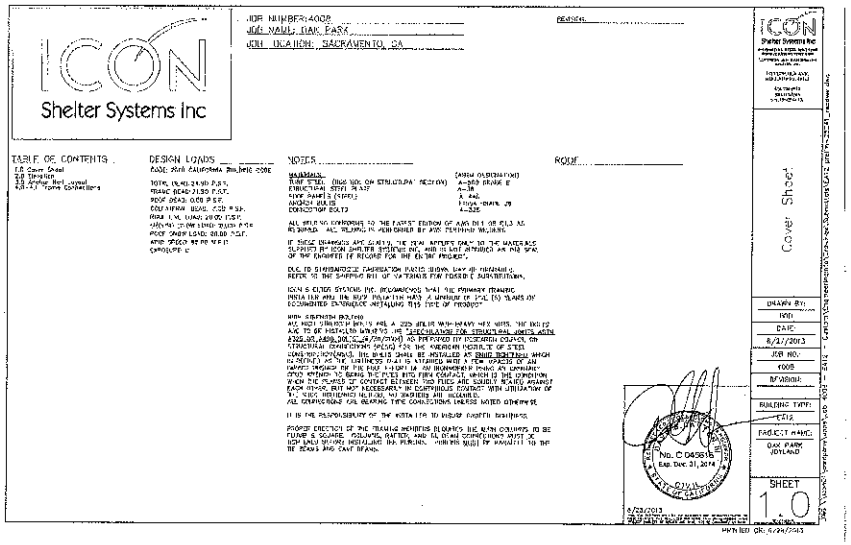

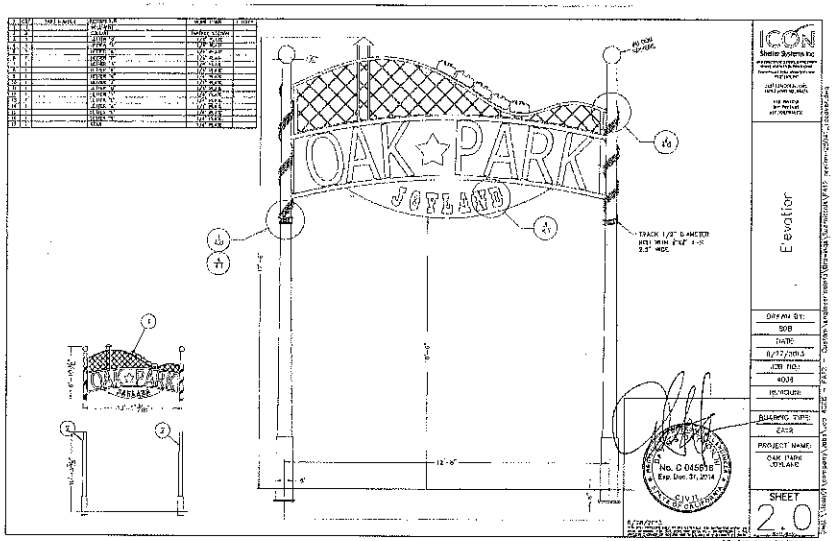

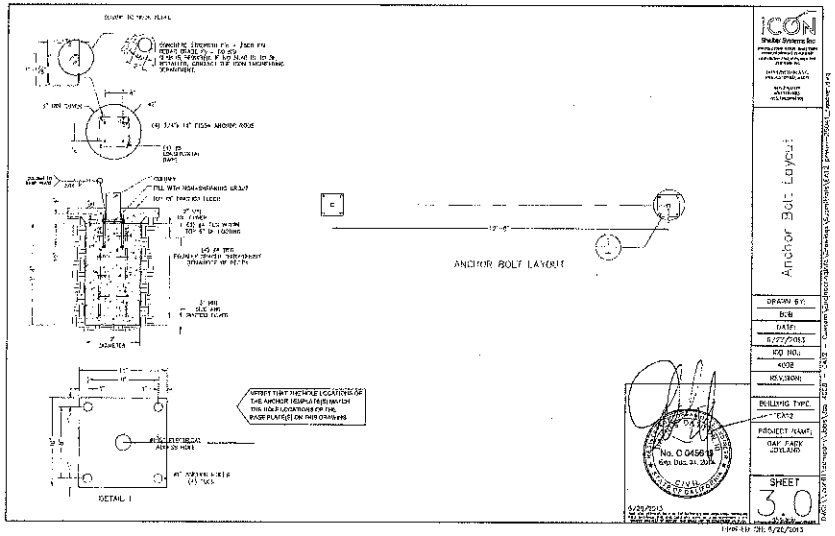

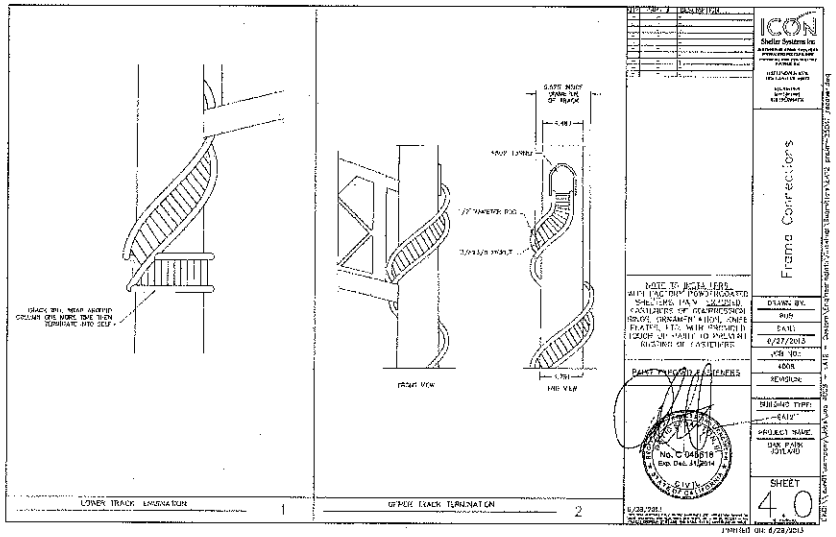

811 Know what's below. Call before you dig.

Callander Associates Landscape Architecture, Inc.

CA PROJECT NO. 12.051

BUILDING DEPARTMENT SUBMITTAL

CITY OF SACRAMENTO
PARKS AND RECREATION DEPARTMENT
PARK, PLANNING, DESIGN, & DEVELOPMENT
LANDSCAPE ARCHITECTURE SECTION
915 I STREET, 5TH FLOOR,
SACRAMENTO, CA 95814

McCLATCHY PARK - L19136500

McCLATCHY PARK RENOVATION
ENTRY ARCH

LANDSCAPE ARCHITECT: BW
DESIGN BY/DRAWN BY: DM/BC
CAD FILE: 12.051
DATE: 7/26/13
SCALE: N.T.S.
CAD SCALE:
P.N.: L19136500
REVISIONS

SHEET NO. 46 OF 52

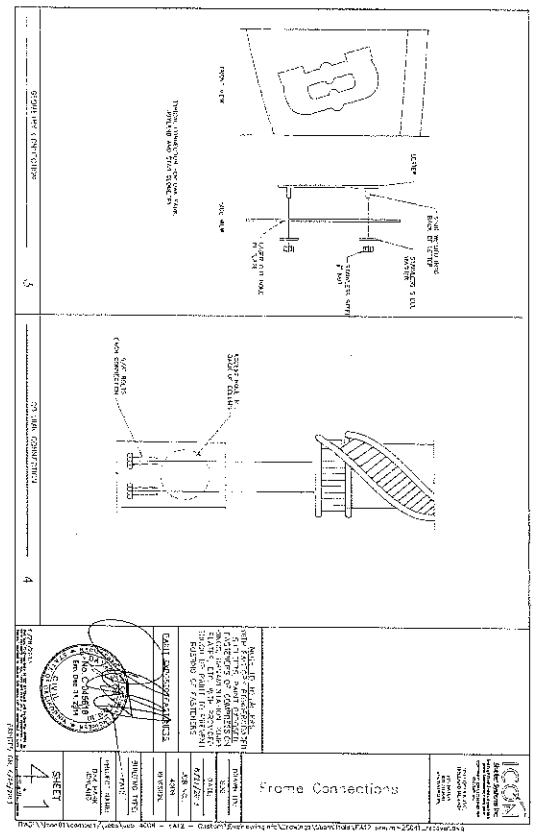

Callender Associates
Landscape Architecture, Inc.
1110 Bayhill Drive, Suite 100
San Bruno, CA 94066
Telephone
Fax
Project Office
Callisterweg, CA PROJECT NO. 12.051

BUILDING DEPARTMENT SUBMITTAL

SHEET NO. 47 OF 52

LANDSCAPE ARCHITECT: BK
DESIGN BY/DRAWN BY: DM/BC
CAD FILE: 12.051
DATE: 7/26/13
SCALE: N.T.S.
CAD SCALE:
T.N.: L19136500
REVISIONS:

McCLATCHY PARK RENOVATION
ENTRY ARCH

CITY OF SACRAMENTO
PARKS AND RECREATION DEPARTMENT
PARK, PLANNING, DESIGN, & DEVELOPMENT
LANDSCAPE ARCHITECTURE SECTION
915 I STREET, 5TH FLOOR,
SACRAMENTO, CA 95814

McCLATCHY PARK - L19136500

SPOHN RANCH SKATE PARKS
PLANNING ‹ DESIGN › CONSTRUCTION
15131 CLARK AVE - CITY OF INDUSTRY, CA 91745
OFFICE (626) 330-3003
FAX (626) 330-0592

The use of these plans shall be restricted to the original site for which they were prepared, and publication thereof is limited to such use. Reproduction, publication or reuse of these plans or concepts by any method, in whole or part, without express written consent from Spohn Ranch, Inc. is prohibited. Title to these plans and concepts belongs to Spohn Ranch, Inc. without prejudice. Visual contact with or any other use of the plans shall constitute acceptance of these restrictions. Copyright © 2013 Spohn Ranch, Inc.

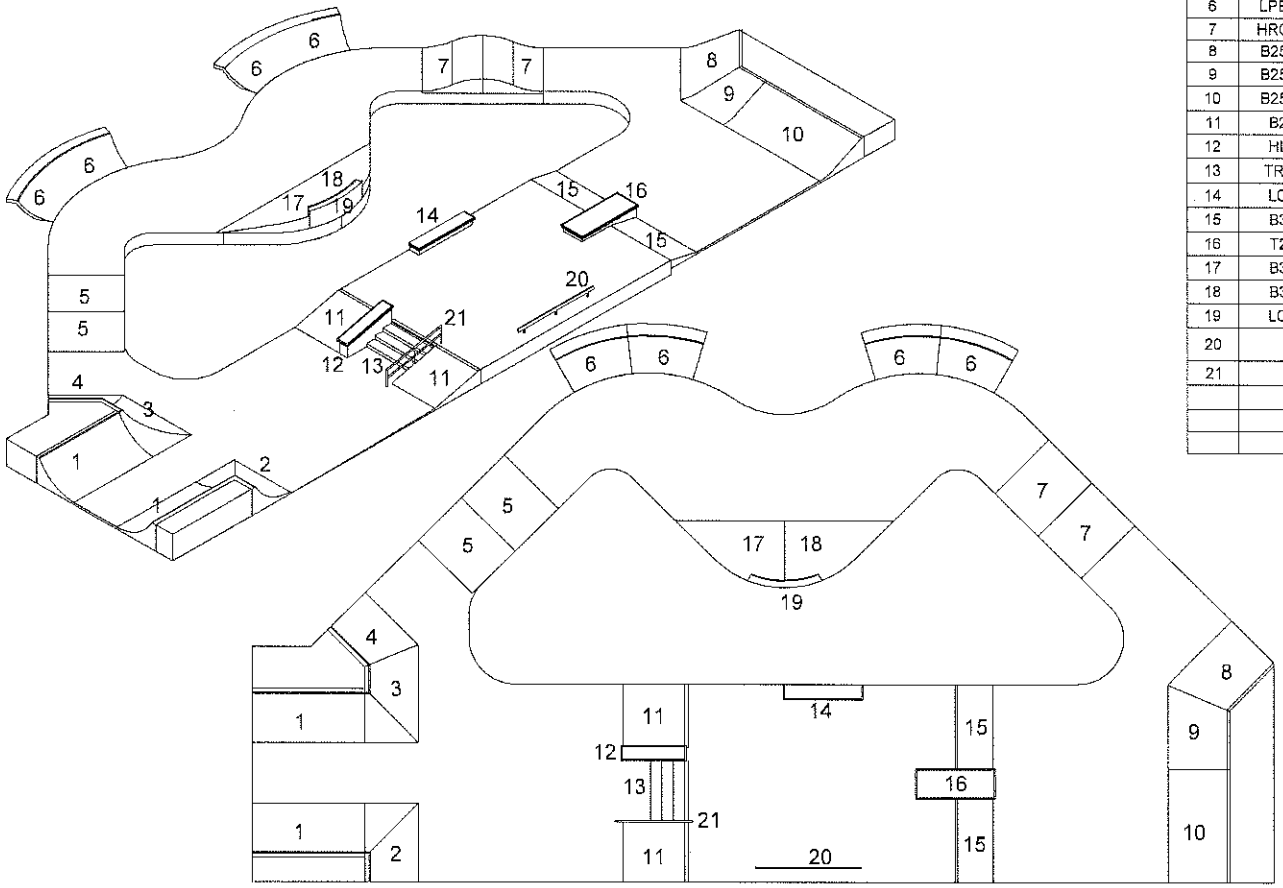

COMPONENT LIST - ALL DIMS ARE NOMINAL			
REF#	CODE	DESCRIPTION	QTY
1	R74120-1	RAMP 7'L x 15'-8"W x 4'H	2
2	PRTR7120-1	RAMP W/ CORNER 7'L x 10'-4"W x 4'H	1
3	PRTR7120-1	RAMP W/ CORNER 7'L x 12'-9"W x 4'H	1
4	R73120-1	RAMP 7'L x 9'-10"W x 4'H	1
5	HRO3090-1	HALF ROLL OVER 8'L x 10'W x 3'H	2
6	LPE7080-1	LARGE CORNER BOWL 6'-6"L x 10'-7"W x 2'-6"H	4
7	HRO3060-1	HALF ROLL OVER 8'L x 10'W x 2'H	2
8	B252090-1	25° BANK 8'-6"L x 12'W x 3'H	1
9	B252090-1	25° BANK 8'-6"L x 11'W x 3'H	1
10	B252090-1	25° BANK 8'-6"L x 15'W x 3'H	1
11	B2060-1	14° BANK 8'-6"L x 8'-3"W x 2'H	2
12	HL098-1	HUBBA LEDGE 8'-6"L x 2'W x 3'-6"H	1
13	TR2060-1	STAIR 5'L x 8'-3"W x 2'H	1
14	LG030-1	GRIND LEDGE 10'-6"L x 2'W x 1'H	1
15	B3030-1	14° BANK 5'L x 11'-3"W x 1'H	2
16	T2060-1	PLATFORM 10'-6"L x 4'W x 2'H	1
17	B3060-1	15° BANK 8'L x 14'-4"W x 2'H	1
18	B3060-1	15° BANK 8'L x 14'-4"W x 2'H	1
19	LG090-1	GRIND LEDGE 9'-10"L x 1'W x 3'H	1
20		2"x3" RECTANGULAR S.S. GRIND RAIL AT 1'-2" HIGH	14ft.
21		2" SCH. 40 ROUND S.S. GRIND RAIL AT 2'-8" HIGH	10ft.
		S.S. COPING	86ft.
		2x2 S.S. EDGE PROTECTION	74ft.
		2x6 S.S. EDGE PROTECTION	8ft.

BUILDING DEPARTMENT SUBMITTAL

811 Know what's below. Call before you dig.

Dallander Associates
Landscape Architecture
11150 Sun Center Drive, Suite 104
Rancho Cordova, CA 95670
T 916.635.9135

CA PROJECT NO. 12-051

CITY OF SACRAMENTO
PARKS AND RECREATION DEPARTMENT
PARK, PLANNING, DESIGN, & DEVELOPMENT
LANDSCAPE ARCHITECTURE SECTION
915 I STREET, 5TH FLOOR,
SACRAMENTO, CA 95814

McCLATCHY PARK - P.N.

McCLATCHY PARK IMPROVEMENTS
SKATE PARK PRE-CAST
CONCRETE LAYOUT PLAN

CHECKED BY

DESIGN BY/DRAWN BY
DPS/KW/BG
CAD FILE
12.051
DATE 7/26/13
SCALE AS NOTED
CAD SCALE 1:1
P.N.
REVISIONS

SHEET NO.
SK-1 OF 58

SPOHN RANCH SKATE PARKS
PLANNING ‹ DESIGN › CONSTRUCTION
15131 CLARK AVE - CITY OF INDUSTRY, CA 91745
OFFICE (626) 330-5803
FAX (626) 330-5505

The use of these plans shall be restricted to the original site for which they were prepared, and publication thereof is limited to such use. Reproduction, publication or reuse of these plans or concepts by any method, in whole or part, without express written consent from Spohn Ranch, Inc. is prohibited. Title to these plans and concepts belongs to Spohn Ranch, Inc. without prejudice. Visual contact with or any other use of the planset shall constitute acceptance of these restrictions. Copyright © 2010 Spohn Ranch, Inc.

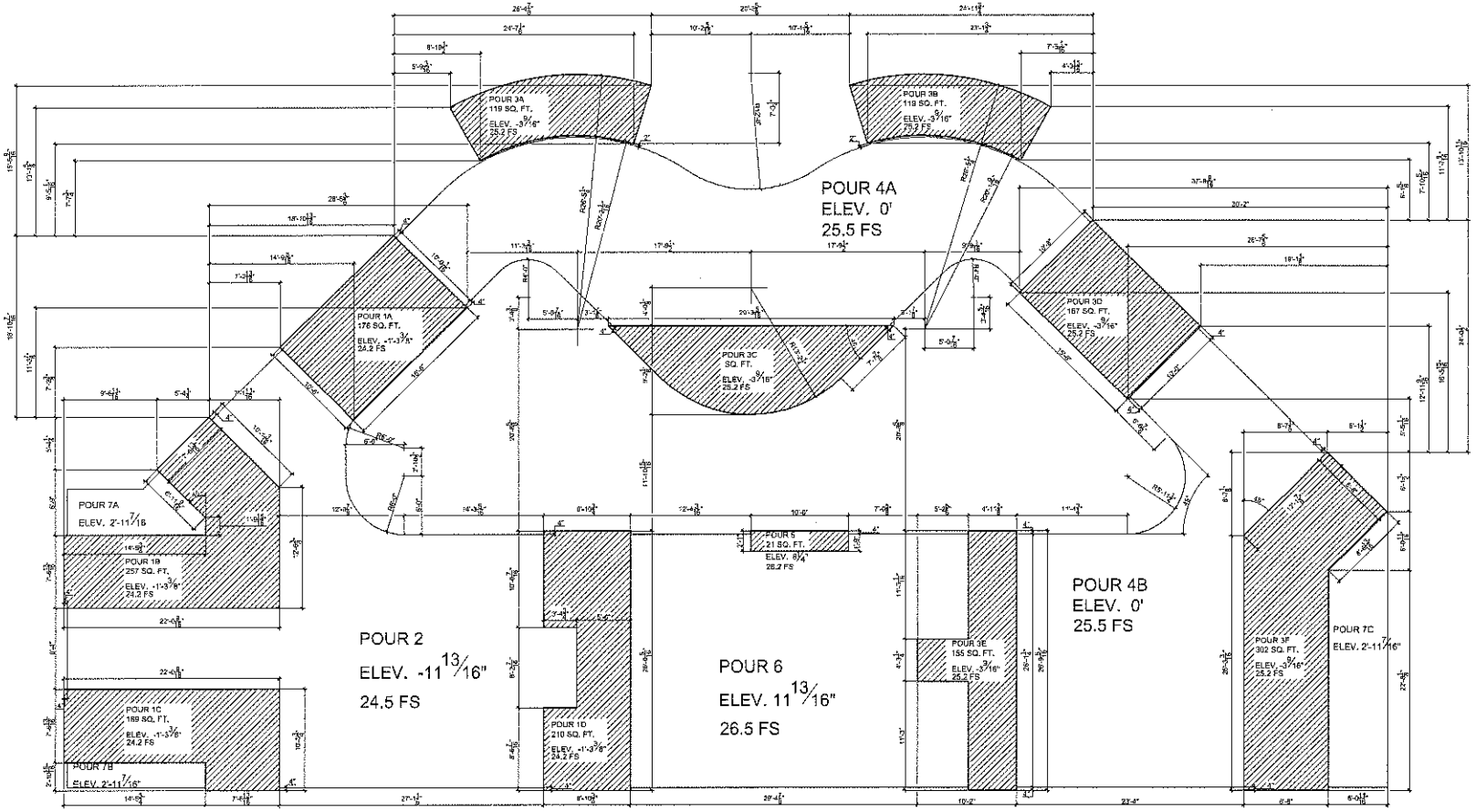

NOTE: CONFIRM PROJECT SITE BENCHMARK ELEVATION AS 25.5' BEFORE COMMENCING GRADING OPERATIONS. LOCATION OF BENCHMARK PROVIDED BY OTHERS.

0 2' 4' 8' 16'

NORTH

811 Know what's below. Call before you dig.

Callander Associates Landscape Architecture
11180 Sun Center Drive, Suite 104
Rancho Cordova, CA 95670
T 916.635.9153

CA PROJECT NO. 12-051

BUILDING DEPARTMENT SUBMITTAL

CITY OF SACRAMENTO
PARKS AND RECREATION DEPARTMENT
PARK, PLANNING, DESIGN, & DEVELOPMENT
LANDSCAPE ARCHITECTURE SECTION
915 I STREET, 5TH FLOOR
SACRAMENTO, CA 95814

McCLATCHY PARK - P.N.

McCLATCHY PARK IMPROVEMENTS
SKATE PARK PRE-CAST CONCRETE FOOTING PLAN

CHECKED BY: —
DESIGN BY/DRAWN BY: DPS/KW/BC
CAD FILE: 12-051
DATE: 7/26/12
SCALE: AS NOTED
CAD SCALE: 1:1
P.N.:
REVISIONS:

SHEET NO. SK-2 OF 58

GENERAL NOTES

[illegible]

SPOHN RANCH SKATE PARKS

PLANNING ‹ DESIGN › CONSTRUCTION
15151 CLARK AVE • CITY OF INDUSTRY, CA 91745
OFFICE (626) 336-5860
FAX (626) 330-5803

The use of these plans shall be restricted to the original site for which they were prepared, and publication thereof is limited to such use. Reproduction, publication or reuse of these plans or concepts by any method, in whole or part, without express written consent from Spohn Ranch, Inc. is prohibited. Title to these plans and concepts belongs to Spohn Ranch, Inc. without prejudice. Visual contact with or any other use of the plans shall constitute acceptance of these restrictions. Copyright © 2013 Spohn Ranch, Inc.

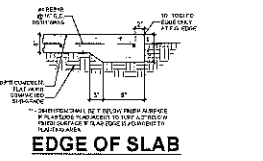

EDGE OF SLAB

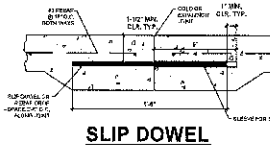

SLIP DOWEL

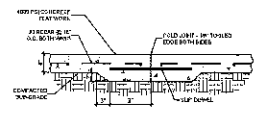

COLD JOINT

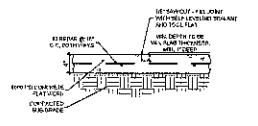

SAWCUT JOINT

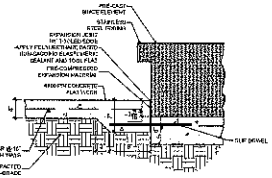

EXPANSION JOINT

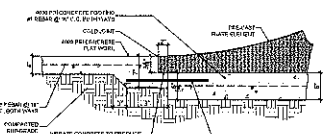

PRE-CAST CONCRETE TOE CONNECTION

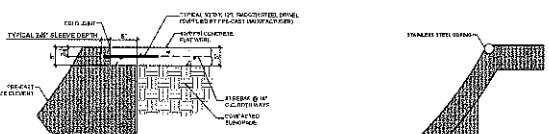

PRE-CAST CONCRETE TOP SLAB CONNECTION

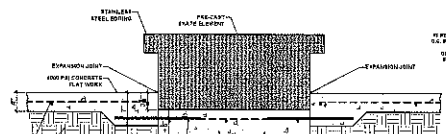

PRE-CAST CONCRETE PROFILE II

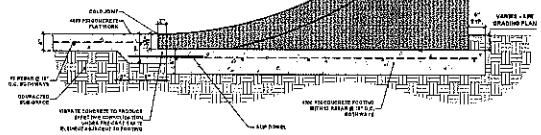

PRE-CAST CONCRETE CANTILEVERED PROFILE

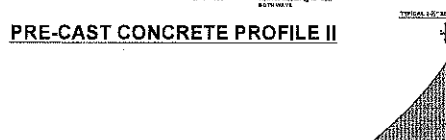

PRE-CAST CONCRETE PROFILE

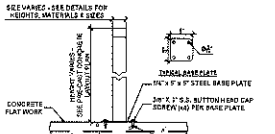

GRIND RAIL CONNECTION

811 Know what's below. Call before you dig. CA

Collander Associates Landscape Architecture
11180 Sun Center Drive, Suite 104
Rancho Cordova, CA 95670
T 916.635.9135

PROJECT NO. 12-051

CITY OF SACRAMENTO
PARKS AND RECREATION DEPARTMENT
PARK, PLANNING, DESIGN & DEVELOPMENT
LANDSCAPE ARCHITECTURE SECTION
915 I STREET, 5TH FLOOR,
SACRAMENTO, CA 95814.
McCLATCHY PARK - P.N.

McCLATCHY PARK IMPROVEMENTS
SKATE PARK PRE-CAST CONCRETE
SPECIFICATIONS AND DETAILS

BUILDING DEPARTMENT SUBMITTAL

CHECKED BY: --
DESIGN BY/DRAWN BY: DPS/KU/BC
CAD FILE: 12.051
DATE: 7/26/13
SCALE: AS NOTED
CAD SCALE: 1:1
P.N.:
REVISIONS:

SHEET NO. SK-3 of 58

CONCRETE & REINFORCING STEEL NOTES:

1. Concrete construction shall conform to ACI 318-08.
2. The minimum 28 day strength and type of concrete shall be as follows:
   A. Drilled Pier ..... 3,000 psi (150 pcf)
3. Cement shall conform to ASTM C-150, type I or II.
4. Natural sand and aggregate shall conform to ASTM C-33.
5. Reinforcing steel shall conform to ASTM A615 Grade 60, UNO.
6. Reinforcing steel shall be fabricated and installed according to the Manual of Standard Practice of Reinforced Concrete Construction by the Concrete Reinforcing Steel Institute.
7. Dimensions shown below for location of reinforcing are to the face of reinforcing and denote clear coverage. Concrete coverage shall be as follows UNO on the contract documents.
   A. Concrete deposited directly against ground except slabs ..... 3"
   B. Concrete exposed to ground but placed in forms ..... 2"
   C. Slabs on the ground ..... position in center of slab.
8. Remove all debris from the forms before placing any concrete.
9. Obtain approval of all affected trades prior to placing concrete.
10. No wood spreaders or wood stakes allowed in areas to be concreted.
11. Concrete mix design shall be prepared by an independent laboratory approved by the school district.
12. Notify the Structural Engineer 48 hours prior to placing concrete.
13. Reinforcing steel not specifically detailed shall be per ACI-318-2008 Detailing Manual.

TESTS and INSPECTIONS:

1. Tests and Inspections shall be provided by a qualified testing agency as marked below and shall conform to the requirements of the 2010 CBC, Section 1704.

Tests:	Inspections:
☐ Fill Compaction	☐ Footing Excavation
☐ Field Density	☐ Pile/Pier Installation
☒ Reinforcing Steel	☒ Reinforcement Placement
☒ Concrete	☐ Reinforcement welding
☐ Structural Steel	☐ Shop Welding
☐ Masonry	☐ Field Welding
☐ Grout and Mortar	☐ High Strength Bolting
	☐ Masonry Placement & Grouting
	☐ Shear Stud Installation
	☒ Concrete Placement
	☒ Concrete Batching

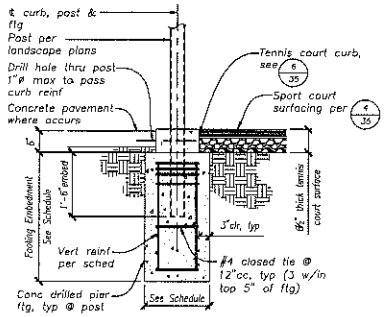

CONCRETE NOTES:
1. F'c = 3000 psi min at 28 days.
2. Reinforcing steel shall be Grade 60 UNO.

Pole Type	Height max	Drilled Pier Footing Diameter	Drilled Pier Footing Embedment	Vertical Reinforcement
Chainlink Fence	12'	24"	4'-0"	5-#5 verts, equally spaced
Maintenance and Court Gates	12'	24"	5'-0"	5-#5 verts, equally spaced

TENNIS COURT FENCING, MAINTENANCE GATE, and TENNIS COURT GATE FOOTINGS (1/S1)

¾"=1'-0"

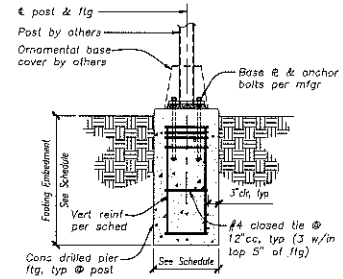

CONCRETE NOTES:
1. F'c = 3000 psi min at 28 days.
2. Reinforcing steel shall be Grade 60 UNO.

Pole Type	Height max	Drilled Pier Footing Diameter	Drilled Pier Footing Embedment	Vertical Reinforcement
Ornamental Streetlight Pole	14'	24"	3'-0"	5-#5 verts, equally spaced
Solar Panel Pole (F1)	22'	24"	4'-6"	5-#5 verts, equally spaced

ORNAMENTAL STREETLIGHT POLE and SOLAR PANEL POLE (F1) (2/S1)

¾"=1'-0"

Barrish Pelham & Associates, Inc.
Consulting Engineers
(916) 418-9100
Sacramento, CA
barrish.com

0 10' 20' 40'

NORTH

811 Know what's below. Call before you dig.

Callander Associates Landscape Architecture

CA PROJECT NO. 12.051

BUILDING DEPARTMENT SUBMITTAL

CITY OF SACRAMENTO
PARKS AND RECREATION DEPARTMENT
PARK PLANNING, DESIGN, & DEVELOPMENT
LANDSCAPE ARCHITECTURE SECTION
915 I STREET, 5TH FLOOR,
SACRAMENTO, CA 95814

McCLATCHY PARK IMPROVEMENTS
FOOTINGS DETAILS

CHECKED BY: IW
DESIGN BY/DRAWN BY: SG
CAD FILE: 12.051
DATE: 7/26/13
SCALE: Per Plan
CAD SCALE: 1:1
T.N.:
REVISIONS

SHEET NO. S1 OF 58

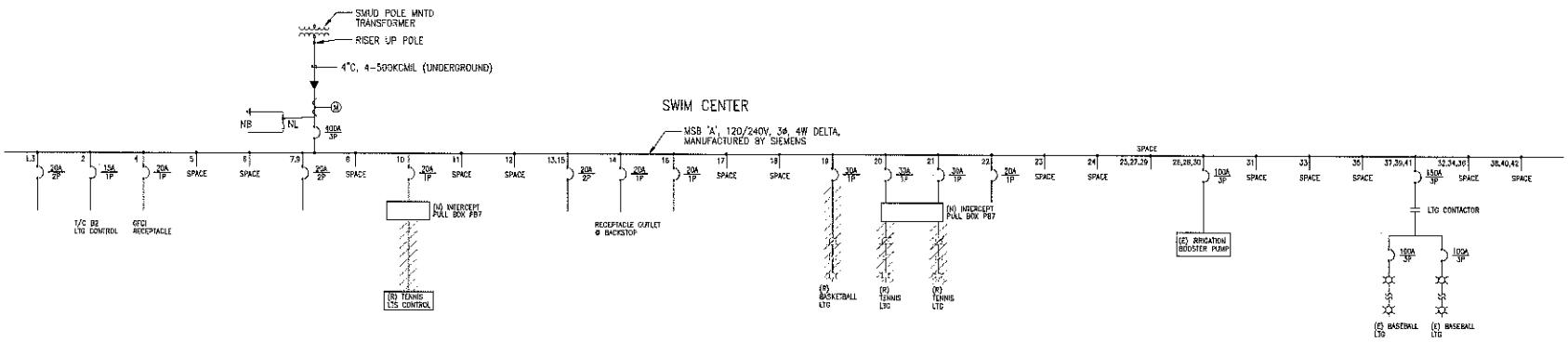

ALL EQUIPMENT IS EXISTING UNLESS OTHERWISE NOTED

1 EXISTING MSB 'A' SINGLE LINE DIAGRAM

SCALE:

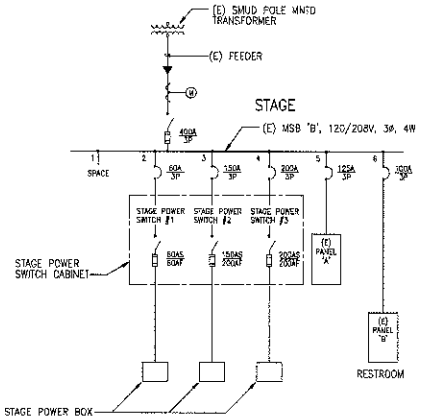

ALL EQUIPMENT IS EXISTING UNLESS OTHERWISE NOTED

2 EXISTING MSB 'B' SINGLE LINE DIAGRAM

SCALE:

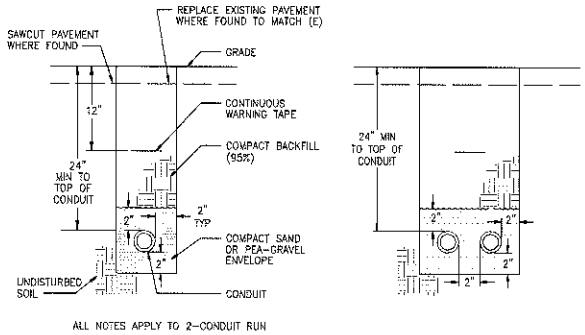

3 TRENCH DETAIL

SCALE:

LEGEND

CIRCUITING

- A-1 — HOMERUN CONDUIT AND CONDUCTORS TO PANEL 'A' CIRCUIT 1; SLASH MARKS INDICATE NUMBER OF CONDUCTORS, 2 #12 AWG + 1 #12 GND, UON
- CIRCUIT CONCEALED IN WALL OR CEILING
- CIRCUIT CONCEALED IN FLOOR OR UNDERGROUND
- CIRCUIT REMOVED
- CONDUIT UP
- CONDUIT DOWN
- CONDUIT STUB AND CAP
- CONDUIT CONTINUATION
- ANNOTATED WIRE, LETTER INDICATES WIRE USAGE
  - OH - OVERHEAD POWER LINE
  - OHT - OVERHEAD TELEPHONE LINE
  - T - UNDERGROUND TELEPHONE LINE

ELECTRICAL APPARATUS AND EQUIPMENT

- SAFETY DISCONNECT SWITCH, FUSED AND NON-FUSED
- FUSED SWITCH
- M — METER
- CIRCUIT BREAKER
- GROUND TO EARTH
- SWITCH
- CONTACTS, NORMALLY OPEN, NORMALLY CLOSED
- TRANSFORMER, SINGLE OR THREE PHASE, SINGLE LINE
- TRANSFORMER, POLE MOUNT, PLAN
- M — CURRENT TRANSFORMER WITH UTILITY METER & SOCKET
- UNDERGROUND TERMINATION POINT
- PB — ELECTRICAL PULLBOX
- JP — JOINT POLE

PANELBOARDS AND RELATED EQUIPMENT

- PANELBOARD, SURFACE OR RECESSED

OUTLETS

- DUPLEX RECEPTACLE, +15" AFF UON

FIXTURES

- DECORATIVE SINGLE-HEAD PARK LIGHT
- DECORATIVE TWIN-HEAD PARK LIGHT
- STREET LIGHT
- CANOPY LIGHT
- BASEBALL FIELD LIGHT
- TENNIS & BASKETBALL COURT LIGHT
- PATH SOLAR LIGHT
- PATH ORNAMENTAL LIGHT
- SHELTER SOLAR LIGHT

TAGS

- 1/E1 — DETAIL TAG e.g., 1 IS THE DETAIL NUMBER, E1 IS THE SHEET NUMBER
- F1 — LIGHT FIXTURE TAG, FIXTURE TYPE F1
- 1 — FEEDER TAG, TAG #1

ABBREVIATIONS

A	AMPERE
BP	BY-PASS TEST SWITCH
C	CONDUIT
CB	CIRCUIT BREAKER
CO	CONDUIT ONLY
E	EXISTING TO REMAIN
EGC	EQUIPMENT GROUNDING CONDUCTOR
GFCI	GROUND FAULT CIRCUIT INTERRUPTER
GND	GROUND
JP	JOINT POLE
LED	LIGHT EMITTING DIODE
LTG	LIGHTING
LTS	LIGHTS
MH	METAL HALIDE
MNTD	MOUNTED
N	NEW
PB	PULL BOX
PC	PHOTOCONTROL
POC	POINT OF CONNECTION
PV	PHOTOVOLTAIC
PVC	POLYVINYLCHLORIDE
R	EXISTING TO BE REMOVED
RL	RELOCATED EXISTING
RSC	RIGID STEEL CONDUIT
SCH	SCHEDULE
TC	TIME CLOCK
TS	TIME SWITCH
TB	TELEPHONE PULL BOX
TYP	TYPICAL
UON	UNLESS OTHERWISE NOTED
V	VOLT
W	WATT
WP	WEATHERPROOF
WB	WATER BOX
XFMR	TRANSFORMER

LIGHT FIXTURE SCHEDULE

SYMBOL	TYPE	DESCRIPTION	MANUFACTURER'S CATALOG NO.	MOUNTING	VOLT.	LAMPS	REMARKS
	F1	SOLAR SECURITY LUMINAIRE ON POLE WITH PV PANEL 4" STRAIGHT ROUND STEEL POLE, TRANSFORMER BASE, CHARGE CONTROLLER, BATTERIES	HADCO # C4246 W/ HADCO ARM BRACKET CA4246 POLE: HADCO CP4246	POLE	120	24W LED	PATH
	F2	LED ACORN LUMINAIRE, TYPE V IES DISTRIBUTION, ON 12' FLUTED POLE WITH PV CONTROLLER AND BATTERY BOX	KING LUMINAIRE 'WASHINGTON ACORN'	POLE	120	60W LED	ORNAMENTAL
	F3	LED LUMINAIRE, TYPE V IES DISTRIBUTION, WITH PV PANEL ON SHELTER ROOF	SOL LIGHTING 'OASYS' # OAS-T5-A-S-R	CEILING	120	6W LED	SHELTER

REGISTERED PROFESSIONAL ENGINEER — Robert D. Zeiger — No. E7218 — Exp. 9/30/14 — Electrical — STATE OF CALIFORNIA

ZEIGER ENGINEERS, INC.
ELECTRICAL CONSULTANTS
475 3RD STREET
OAKLAND, CA 94607
TEL (510) 452-0391
FAX (510) 452-0661

811 — Know what's below. Call before you dig.

Callander Associates Landscape Architecture
1331 Bird Street, Suite 104
Oroville, CA 95965
T 916.825.2583
F 916.825.2583

OA PROJECT NO. 12.051

BUILDING DEPARTMENT SUBMITTAL

CITY OF SACRAMENTO
PARKS AND RECREATION DEPARTMENT
PARK PLANNING, DESIGN, & DEVELOPMENT
LANDSCAPE ARCHITECTURE SECTION
915 I STREET, 5TH FLOOR,
SACRAMENTO, CA 95814

McCLATCHY PARK - P.N.

McCLATCHY PARK IMPROVEMENTS
ELECTRICAL LEGEND AND DETAILS

CHECKED BY: RZ
DESIGN BY/DRAWN BY: RZ/AG
CAD FILE: 12.051
DATE: 7/26/13
SCALE: AS SHOWN
CAD SCALE: 1:1
P.N.:
REVISIONS

SHEET NO. E1 OF 58

3714 07/22/13

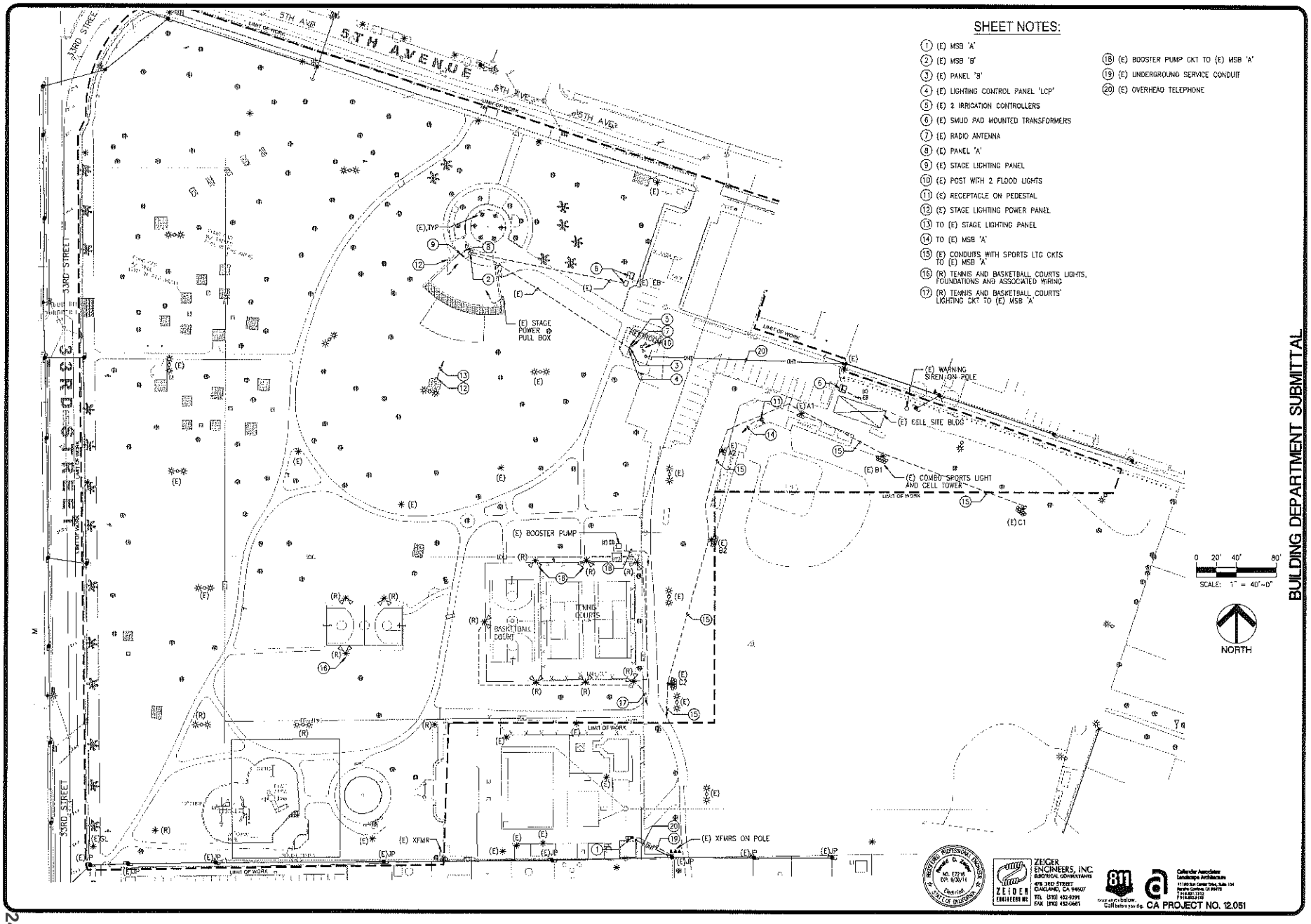

SHEET NOTES:

1. (E) MSB 'A'
2. (E) MSB 'B'
3. (E) PANEL 'B'
4. (E) LIGHTING CONTROL PANEL 'LCP'
5. (E) 2 IRRIGATION CONTROLLERS
6. (E) SMUD PAD MOUNTED TRANSFORMERS
7. (E) RADIO ANTENNA
8. (E) PANEL 'A'
9. (E) STAGE LIGHTING PANEL
10. (E) POST WITH 2 FLOOD LIGHTS
11. (E) RECEPTACLE ON PEDESTAL
12. (E) STAGE LIGHTING POWER PANEL
13. TO (E) STAGE LIGHTING PANEL
14. TO (E) MSB 'A'
15. (E) CONDUITS WITH SPORTS LTG CKTS TO (E) MSB 'A'
16. (R) TENNIS AND BASKETBALL COURTS LIGHTS, FOUNDATIONS AND ASSOCIATED WIRING
17. (R) TENNIS AND BASKETBALL COURTS' LIGHTING CKT TO (E) MSB 'A'
18. (E) BOOSTER PUMP CKT TO (E) MSB 'A'
19. (E) UNDERGROUND SERVICE CONDUIT
20. (E) OVERHEAD TELEPHONE

BUILDING DEPARTMENT SUBMITTAL

CITY OF SACRAMENTO
PARKS AND RECREATION DEPARTMENT
PARK, PLANNING, DESIGN, & DEVELOPMENT
LANDSCAPE ARCHITECTURE SECTION
915 I STREET, 5TH FLOOR,
SACRAMENTO, CA 95814
©CLATCHY PARK - P.N.

McCLATCHY PARK IMPROVEMENTS
EXISTING ELECTRICAL PLAN

CHECKED BY: RZ
DESIGN BY/DRAWN BY: RZ/AG
CAD FILE: 12.051
DATE: 7/26/13
SCALE: AS SHOWN
CAD SCALE: 1:1
P.N.
REVISIONS

SHEET NO. E2 OF 58

3714 07/22/13

ZEIGER ENGINEERS, INC.
ELECTRICAL CONSULTANTS
478 3RD STREET
OAKLAND, CA 94607
TEL (510) 452-9391
FAX (510) 452-0665

811 Know what's below. Call before you dig.

Callander Associates Landscape Architecture
11180 Sun Center Drive, Suite 104
Rancho Cordova, CA 95670
T 916.851.1912
F 916.852.9162

CA PROJECT NO. 12.051

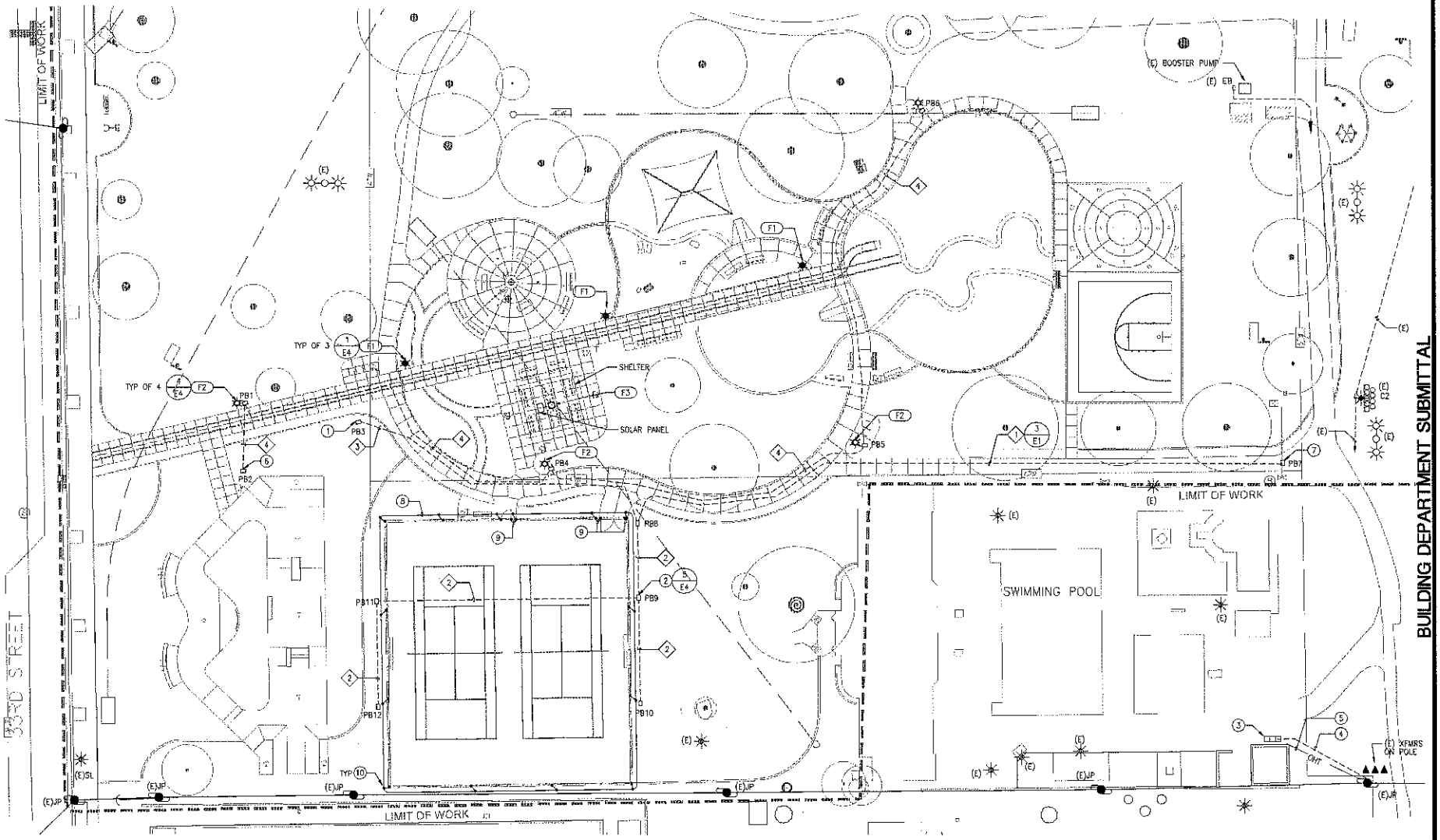

SHEET NOTES:

1. PULL BOX FOR FUTURE SIGN LIGHT, TAPE AND TAG CONDUCTORS
2. PULL BOX FOR FUTURE TENNIS COURT LIGHTS, TYP OF 4 CALTRANS NO.3 1/2, LOCATE 48" CLEAR FROM FENCE
3. (E) MSB 'A', SEE SINGLE LINE DIAGRAM ON SHEET E24
4. (E) UNDERGROUND SERVICE CONDUIT
5. (E) OVERHEAD TELEPHONE
6. PULL BOX TO INTERCEPT (E) SMUD PARK LIGHTS CIRCUIT
7. PULL BOX TO INTERCEPT (E) CONDUIT SERVING TENNIS COURT LIGHTS. TAPE AND TAG CONDUCTORS
8. BURIED GROUND RING, #2/0 BARE COPPER, 24" BELOW GRADE. CONNECT TO FENCE POSTS WITH GROUND CLAMPS
9. BONDING JUMPER ACROSS GATE HINGES
10. GROUND CABLE CONNECTION

0 10' 20' 40' NORTH

ZEIGER ENGINEERS, INC.
ELECTRICAL CONSULTANTS
478 3RD STREET
OAKLAND, CA 94607
TEL (510) 452-9201
FAX (510) 452-0441

811 Know what's below. Call before you dig.

Callander Associates Landscape Architecture
11180 Sun Center Drive, Suite 104
Rancho Cordova, CA 95670
T 916.851.1313
F 916.852.9132

CA PROJECT NO. 12.051

BUILDING DEPARTMENT SUBMITTAL

CITY OF SACRAMENTO
PARKS AND RECREATION DEPARTMENT
PARK, PLANNING, DESIGN, & DEVELOPMENT
LANDSCAPE ARCHITECTURE SECTION
915 I STREET, 5TH FLOOR,
SACRAMENTO, CA 95814

McCLATCHY PARK - P.N.

McCLATCHY PARK IMPROVEMENTS
ELECTRICAL PLAN

CHECKED BY: RZ
DESIGN BY/DRAWN BY: RZ/AG
CAD FILE: 12.051
DATE: 7/26/13
SCALE: AS SHOWN
CAD SCALE: 1:1
P.N.
REVISIONS

SHEET NO. E3 OF 58

3714 07/22/13

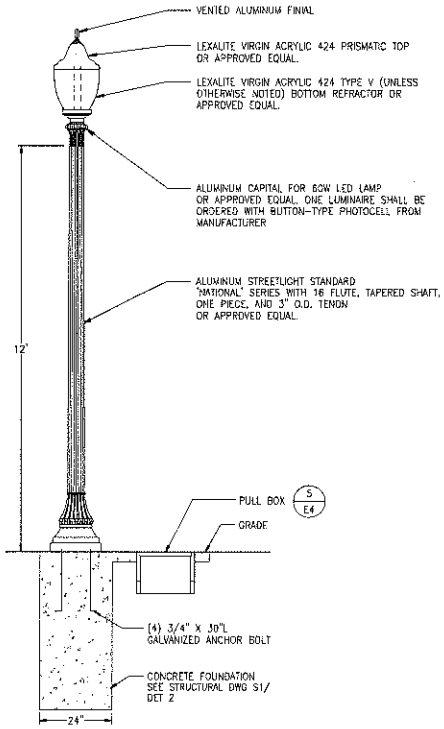

NOTE: THE ACCEPTABILITY OF THE APPROVED EQUAL SHALL BE DETERMINED BY THE CITY ELECTRICAL ENGINEER.

4 ORNAMENTAL STREETLIGHT DETAIL
SCALE:

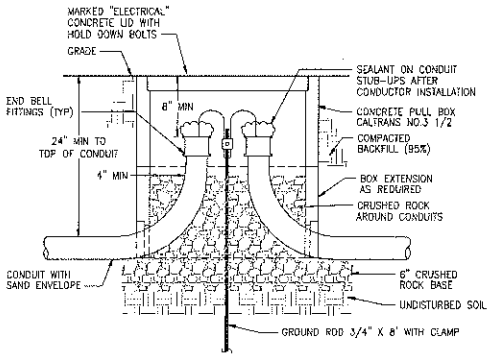

5 PULL BOX DETAIL
SCALE:

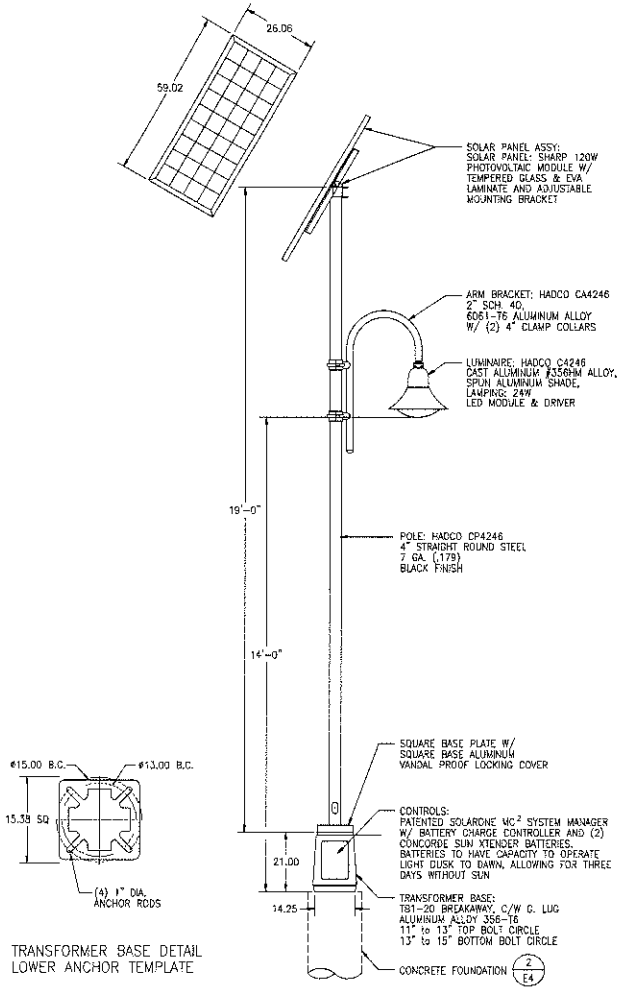

TRANSFORMER BASE DETAIL
LOWER ANCHOR TEMPLATE

1 POLE F1 DETAIL
SCALE:

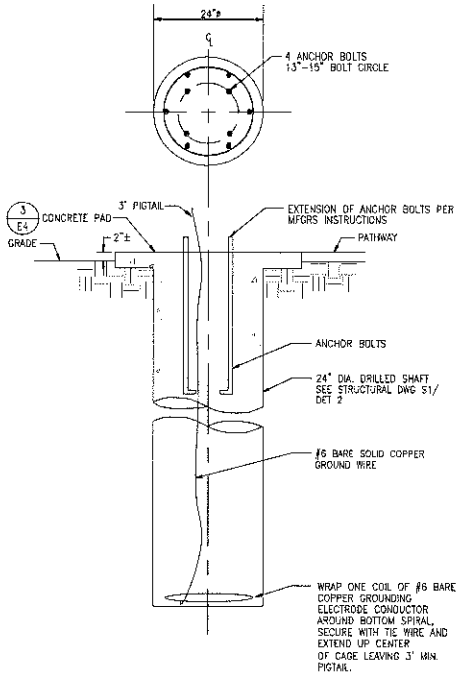

2 POLE FOUNDATION DETAIL
SCALE:

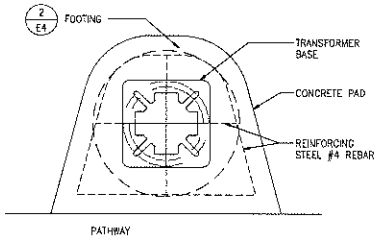

3 POLE PAD
SCALE: 1/10" = 1'

FEEDER SCHEDULE			
TAG	CONDUIT	WIRE QNTY/ GAUGE	SERVING
1	2"C	PULL WIRE 2 #10 + #10 EGC	FUTURE TENNIS COURT LIGHTS FUTURE SIGN LIGHT
2	2"CO	PULL WIRE	FUTURE TENNIS COURT LIGHTS
3	2"C	2 #10 + #10 EGC	FUTURE SIGN LIGHT
4	2"C	2 #8 + #8 EGC	PATHWAY ORNAMENTAL LIGHTS

REGISTERED PROFESSIONAL ENGINEER
MARK D. ZEIBER
NO. E7218
EXP. 9/30/14
Date/Job
STATE OF CALIFORNIA

ZEIBER ENGINEERS, INC.
ELECTRICAL CONSULTANTS
475 3RD STREET
OAKLAND, CA 94607
TEL (510) 452-9591
FAX (510) 452-0661

811 Know what's below. Call before you dig.

Callander Associates Landscape Architecture
1330 Broadway, Suite 1100
Oakland, CA 94612
510-839-7510
510-839-0182

CA PROJECT NO. 12.051

BUILDING DEPARTMENT SUBMITTAL

CITY OF SACRAMENTO
PARKS AND RECREATION DEPARTMENT
PARK, PLANNING, DESIGN & DEVELOPMENT
LANDSCAPE ARCHITECTURE SECTION
915 I STREET, 5TH FLOOR,
SACRAMENTO, CA 95814

McCLATCHY PARK - P.N.

McCLATCHY PARK IMPROVEMENTS
ELECTRICAL DETAILS

CHECKED BY: RZ
DESIGN BY/DRAWN BY: RZ/AG
CAD FILE: 12.051
DATE: 7/26/12
SCALE: AS SHOWN
CAD SCALE: 1:1
P.N.
REVISIONS

SHEET NO. E4 OF 58

3714 07/22/13

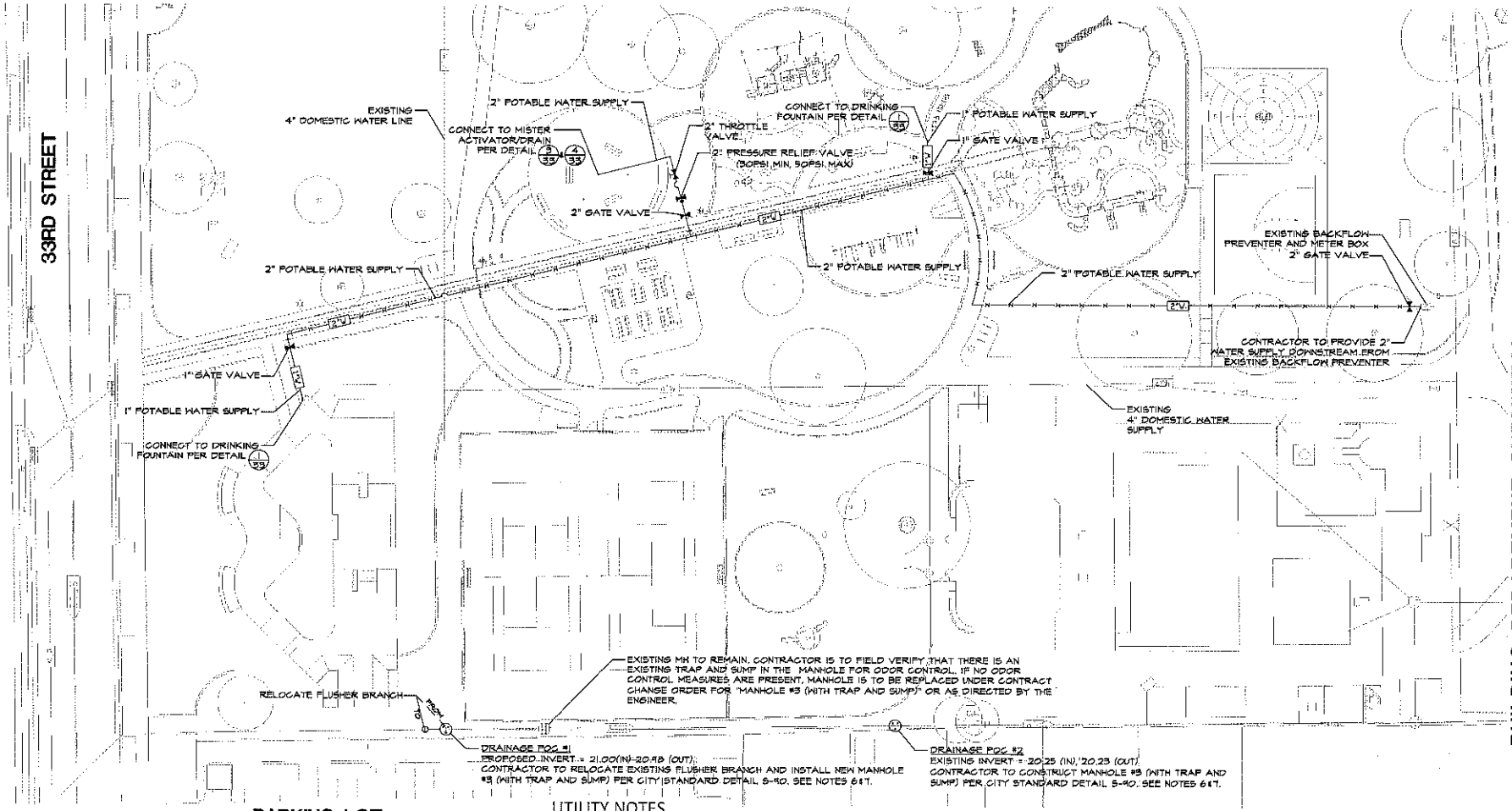

PARKING LOT

UTILITY LEGEND

- PROPOSED DRAIN LINE (SEE GRADING AND DRAINAGE PLAN SHEETS)
- EXISTING BACKFLOW PREVENTER AND METER BOX
- EXISTING WATER LINE
- EXISTING DOMESTIC WATER SUPPLY
- PROPOSED DOMESTIC WATER SUPPLY
- GATE VALVE
- PRESSURE RELIEF VALVE
- THROTTLE VALVE
- EXISTING COMBINED SEWER SYSTEM
- EXISTING MANHOLES
- PROPOSED MANHOLE No. 3 (WITH TRAP AND SUMP) (CSP S-90)
- EXISTING FLUSHER BRANCH
- PROPOSED FLUSHER BRANCH

UTILITY NOTES

1. THIS DESIGN IS DIAGRAMMATIC. ALL PIPING AND VALVES SHOWN ARE FOR DESIGN CLARIFICATION ONLY. INSTALL PIPING AND VALVES OUTSIDE OF CONCRETE WORK AND AWAY FROM PLAY AREAS WHERE POSSIBLE.
2. THE TYPES, LOCATIONS SIZES AND DEPTHS OF EXISTING UTILITIES SHOWN ON THESE PLANS WERE OBTAINED FROM SOURCES OF VARYING RELIABILITY. THE CONTRACTOR IS CAUTIONED THAT ONLY ACTUAL EXCAVATION WILL REVEAL THE TYPES, EXTENT, SIZES, LOCATIONS AND DEPTHS OF SUCH UNDERGROUND UTILITIES. THE CITY OF SACRAMENTO NOR ITS CONSULTANT, MARK THOMAS AND COMPANY, INCORPORATED, CAN ASSUME THE RESPONSIBILITY FOR THE COMPLETENESS OR ACCURACY OF THE DELINEATION OF SUCH UTILITIES NOR THE EXISTENCE OF OTHER BURIED OBJECTS OF SUCH UNDERGROUND UTILITIES WHICH MAY BE ENCOUNTERED BUT ARE NOT SHOWN ON THESE PLANS.
3. THE CONTRACTOR SHALL BE RESPONSIBLE FOR CONTACTING THE RESPECTIVE UTILITY COMPANIES FOR VERIFICATION AT THE SITE OF ANY POSSIBLE CONFLICTS WITH THEIR UNDERGROUND UTILITIES AND THE PROPOSED IMPROVEMENTS SHOWN ON THE PLANS.
4. THE CONTRACTOR SHALL BE RESPONSIBLE FOR CONTACTING THE RESPECTIVE UTILITY COMPANIES 48 HOURS PRIOR TO WORKING AROUND ANY POSSIBLE CONFLICTS WITH THEIR UNDERGROUND UTILITIES AND THE PROPOSED IMPROVEMENTS SHOWN ON THE PLANS.
5. CONTRACTOR SHALL CONNECT NEW DOMESTIC WATER SYSTEM DOWNSTREAM OF EXISTING BACKFLOW PREVENTER. CONTRACTOR TO EXPOSE WATER LINE, AND CONNECT TO PROPOSED GATE VALVE AFTER TESTING AND DISINFECTION.
6. SEE GRADING AND DRAINAGE PLAN FOR PROPOSED INVERTS AND LAYOUT OF DRAINAGE SYSTEM.
7. ANY CONNECTIONS ABOVE MANHOLE BASE SHALL BE CORED AND INSTALLED WITH RESILIENT FLEXIBLE CONNECTION. AN ADDITIONAL FLEXIBLE CONNECTION SHALL BE PLACED 24" OUTSIDE BASE.
8. SEE SHEET U-5 FOR DRAINAGE POC #3.

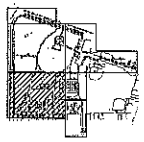
KEYMAP

0 10' 20' 40'

NORTH

811 Know what's below. Call before you dig.

MARK THOMAS & COMPANY
Providing Engineering, Surveying & Planning Services

CA PROJECT NO. 12.051

BUILDING DEPARTMENT SUBMITTAL

CITY OF SACRAMENTO
PARKS AND RECREATION DEPARTMENT
PARK, PLANNING, DESIGN, & DEVELOPMENT
LANDSCAPE ARCHITECTURE SECTION
915 I STREET, 5TH FLOOR,
SACRAMENTO, CA 95814

DEPARTMENT OF PARKS AND RECREATION

MCCLATCHY PARK IMPROVEMENTS
UTILITY PLANS AND DETAILS

Designed: A. ENGEL
Drawn: H. SHUNK
Job No.: 12.051
Date: 7/26/13
Scale: 1"=20'-0"
Checked: bl
File: L:\12051.00
Revisions:

U-1 of 58

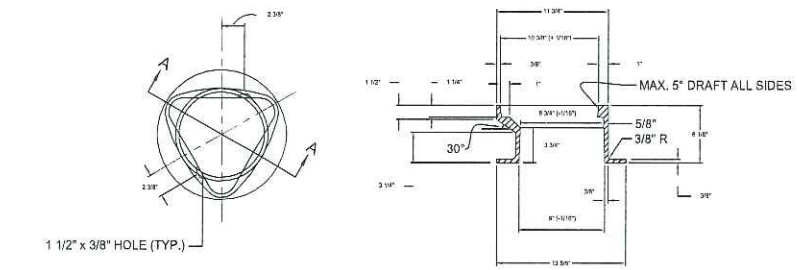

PLAN

SECTION A-A

VALVE BOX FOR STREETS AND PAVED SURFACES

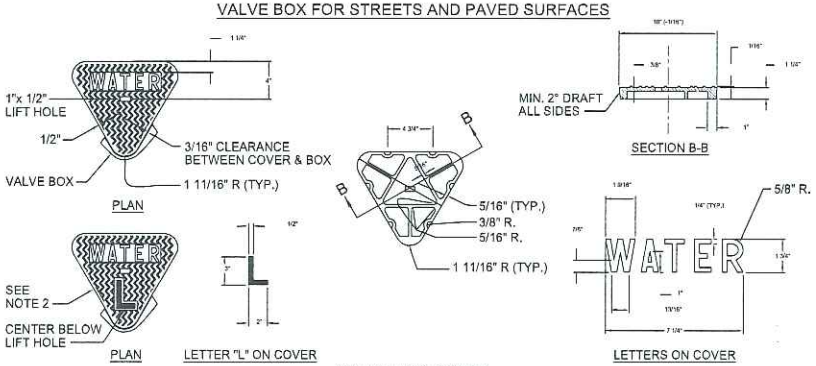

PLAN

SECTION B-B

PLAN

LETTER "L" ON COVER

LETTERS ON COVER

VALVE BOX COVER

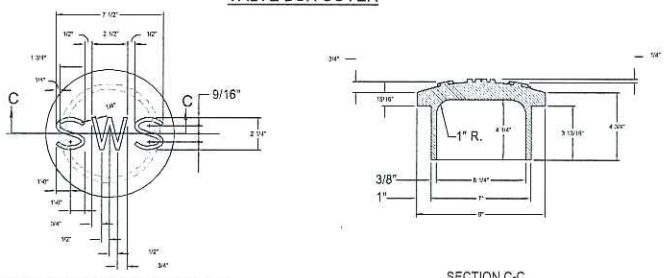

PLAN & LETTERS ON TOP OF DROP CAP

SECTION C-C

DROP CAP FOR PUBLIC UTILITY EASEMENTS

NOTE:

1. VALVE BOX, VALVE BOX COVER AND DROP CAP SHALL BE CONSTRUCTED OF CAST IRON WITH MINIMUM TENSILE STRENGTH OF 25,000 P.S.I.
2. VALVE COVER WITH "L" DESIGNATION SHALL BE USED FOR NEW VALVE INSTALLATION SOUTH OF THE AMERICAN RIVER.

CITY STANDARD DETAIL W-304
STANDARD VALVE BOX AND DROP CAP

0 10' 20' 40'

NORTH

811 Know what's below. Call before you dig.

MARK THOMAS & COMPANY
Providing Engineering, Surveying & Planning Services

CA PROJECT NO. 12.051

BUILDING DEPARTMENT SUBMITTAL

CITY OF SACRAMENTO
PARKS AND RECREATION DEPARTMENT
PARK, PLANNING, DESIGN, & DEVELOPMENT
LANDSCAPE ARCHITECTURE SECTION
915 I STREET, 5TH FLOOR,
SACRAMENTO, CA 95814

McCLATCHY PARK IMPROVEMENTS
UTILITY PLANS AND DETAILS

A. ENGEL
W. SHUNK
12.051
1"=20'-0"

U-2 of 58

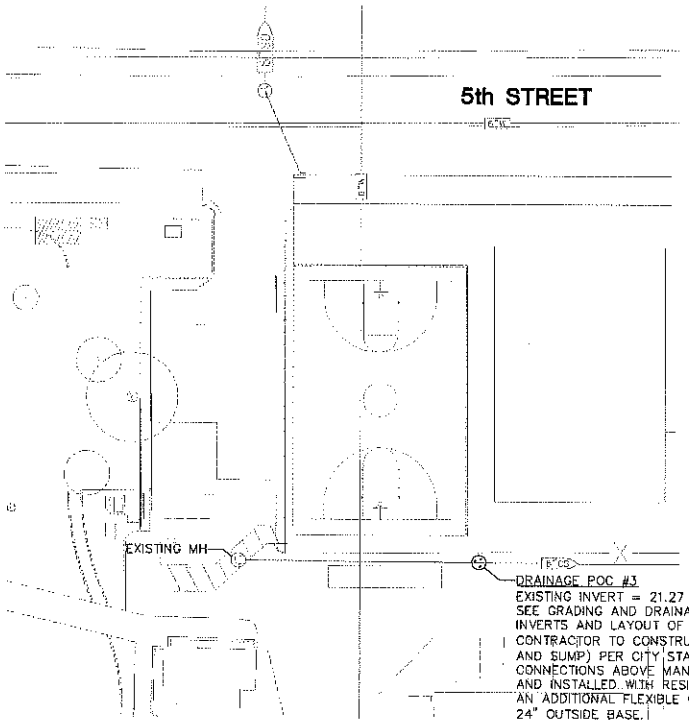

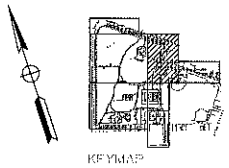

DRAINAGE POC #3

SCALE 1"=20'-0"

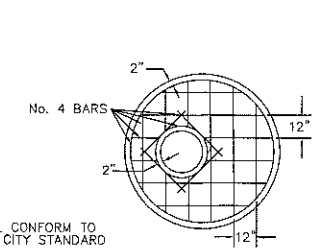

FLAT SLAB TOP

NOTES:

MANHOLES SHALL CONFORM TO SEC. 25 OF THE CITY STANDARD SPECIFICATION

FLEXIBLE COUPLING ON ALL PIPE UP TO 15" DIA. ENTERING MANHOLE WITHIN 1' OF BASE. "COR-N-SEAL" OR APPROVED EQUAL.

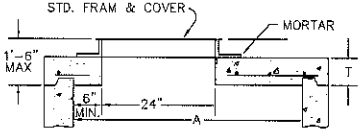

FLAT SLAB SHAL BE USED WHEN DEPTH DOES NOT PERMIT USE OF TAPER UNIT

TABLE OF DIMENSIONS

M.H.	A	B	T MIN.
48"	48"	18"	6"

DIMENSION "B" IS A MINIMUM DIMENSION AND MAY BE GREATER IF DEPTH PERMITS.

RISER SECTIONS, CONES, AND ADJUSTING RINGS SHALL CONFORM TO ASTM DESIGNATION C-478

FRAME SHALL BE SECURED TO RISER OR FLAT SLAB TOP WITH CEMENT MORTAR

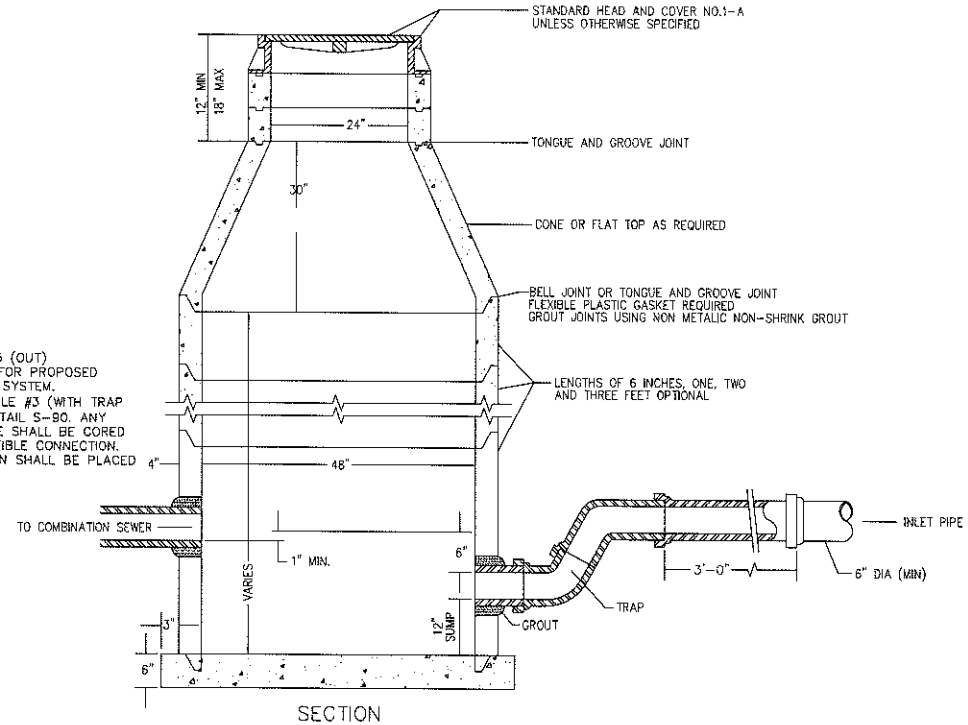

SECTION

CITY STANDARD DETAIL S-90
MANHOLE NO. 3 (WITH TRAP & SUMP)

0 10' 20' 40'

NORTH

811 Know what's below. Call before you dig.

MARK THOMAS & COMPANY
Providing Engineering, Surveying & Planning Services

C.A PROJECT NO. 12.051

BUILDING DEPARTMENT SUBMITTAL

CITY OF SACRAMENTO
PARKS AND RECREATION DEPARTMENT
PARK, PLANNING, DESIGN, & DEVELOPMENT
LANDSCAPE ARCHITECTURE SECTION
915 I STREET, 5TH FLOOR,
SACRAMENTO, CA 95814

McCLATCHY PARK IMPROVEMENTS
UTILITY PLANS AND DETAILS

A. ENGEL
H. SHUNK
12.051
1"=20'-0"

U-3.58

Wallace Kuhl
& ASSOCIATES

Geotechnical Engineering Report

MCCLATCHY PARK IMPROVEMENTS

WKA No. 8890.16P

October 18, 2011

Prepared For:

City of Sacramento
915 I Street, Fifth Floor
Sacramento, California 95814

Wallace Kuhl & Associates

Corporate Office
3050 Industrial Boulevard
West Sacramento, CA 95691
916.372.1434 phone
916.372.2565 fax

Stockton Office
3422 West Hammer Lane, Suite D
Stockton, CA 95219
209.234.7722 phone
209.234.7727 fax

Reno Office
9670 North Virginia Street
Reno, NV 89506
775.626.0300 phone
775.626.0309 fax

October 18, 2011

Mr. Dennis Day
Landscape Architect
Park Planning and Development – Landscape Architecture Section
Department of Parks and Recreation
City of Sacramento
915 I Street, Fifth Floor
Sacramento, California 95814

Geotechnical Engineering Report
MCCLATCHY PARK IMPROVEMENTS
Sacramento, California
WKA No. 8890.16P

As authorized, we have completed our investigation for the McClatchy Park improvements project in Sacramento, California. The purposes of our work have been to explore the existing soil conditions and to provide geotechnical engineering conclusions and recommendations for the project. This letter presents the results of our investigation work.

Our scope of work has included the following:

- Hand augering and sampling at two soil boring locations;
- Obtaining bulk samples of the subgrade soils within the proposed improvement areas;
- Laboratory testing of select soil samples, including Expansion Index and Resistance ("R") value testing of the bulk soil samples;
- Engineering evaluation; and,
- Preparation of this report.

Our scope of work was performed in general accordance with our *Geotechnical Engineering Services Proposal* (WKA No. 2PR11164) dated September 19, 2011.

Site Description

The project site is located at 3500 5th Avenue, which is southeasterly of 5th Avenue and 33rd Street, in Sacramento, California The existing park is currently developed with a raised stage at the northeast end of the park; a playground area at the south end of the park; a basketball court

near the center of the park; exterior concrete flatwork throughout the park; and, landscaping, including relatively mature trees and manicured grasses.

Although existing topographic information was not provided, our observations indicate the site is relatively flat with changes in elevation across the site less than about two feet. Based on topographic information provided on the *United States Geological Survey (USGS) 7.5 Minute Series Topographic Map-Sacramento East Quadrangle* (dated 1967 and photorevised in 1980), the existing ground surface elevation at the site is about +28 feet relative to mean sea level (msl) based on the National Geodetic Vertical Datum (NGVD), 1929.

Project Description

We understand the project will consist of the design and construction of several improvements to the existing McClatchy Park. Specifically, we understand the improvements will consist of new exterior concrete flatwork, concrete curbs and mow strips, a metal shade structure, and an asphalt concrete basketball court.

Based on the existing topography across the site and our understanding of the proposed improvements, we anticipate cuts and fills of about one to two feet will be required to establish final subgrade levels across the site.

Site Investigation and Sampling

Two exploratory borings were drilled on September 30, 2011 utilizing hand operated augering equipment. Relatively undisturbed soil samples were recovered at various depths using a 12-inch long, 2½-inch outside diameter (O.D.), 2-inch inside diameter (I.D.) modified California sampler driven by a 10-pound hand operated slide hammer falling approximately 18 inches.

The samples were retained in 2-inch diameter by 6-inch long thin-walled brass tubes contained within the sampler. Immediately after recovery, the field engineer visually classified the soils in the tubes and the ends of the tubes were sealed to preserve the natural moisture content. All samples were taken to our laboratory for additional classification and selection of samples for testing. The Logs of Soil Borings D1 and D2 attached (Figures 3 and 4), contain descriptions of the soils encountered in each boring. The soil samples were visually classified in general accordance with the Unified Soil Classification System (USCS), which is attached for reference as Figure 5.

Bulk samples of the near-surface subgrade soils were obtained at the boring locations. The samples were obtained from the ground surface to about three feet below the existing ground

surface. Composite samples of subgrade soil were returned to our laboratory for additional testing.

The approximate boring locations are indicated on the attached Site Plan (Figure 2).

Laboratory Testing

Selected undisturbed samples of the soil were tested to determine dry unit weight (American Society of Testing and Materials [ASTM] D2937), natural moisture content (ASTM D2216), and shear strength by triaxial strength testing (ASTM D4767). The results of the moisture/density tests are included on the boring logs at the depth each sample was obtained. The results of the triaxial strength testing are provided on Figure 6.

A composite sample of the anticipated near-surface soils were subjected to Expansion Index testing (ASTM D4829) to determine the expansion potential of the soil. Results of this test are contained on Figure 7.

A composite sample of the anticipated subgrade soil was subjected to R-value testing in accordance with California Test 301. Results of the Resistance value test are contained on Figure 8.

A representative sample of near-surface soil was tested by Sunland Analytical Lab to determine the preliminary corrosion characteristics of the soil (California Department of Transportation Test Method [CTM] 417, 422 & 643). The results of the tests are presented on Figure 9.

FINDINGS

Soil and Groundwater Conditions

The soil conditions at the boring locations generally consists of native silty sands with varying clay, silt, and sand contents extending to the explored 10 foot depths of the borings. At various depths within the borings, variably cemented soils were encountered.

Groundwater was not encountered at the boring locations. According to the map of "Sacramento County, California Ground Water Elevations, Spring 2007," prepared by the County of Sacramento (drawn March 2009), groundwater beneath the site is shown at an approximate elevation of -5 feet msl (reference datum not provided), or about 33 feet below the existing ground surface.

CONCLUSIONS

Seismic Code Parameters

We understand the design of the proposed improvements will be performed using the 2010 edition of the California Building Code (CBC). Based on the 2010 CBC and Chapter 11 of the American Society of Civil Engineers (ASCE) 7-05, *Seismic Design Criteria*, the site parameters may be determined based on the site latitude and longitude using the public domain computer program developed by the USGS. The following parameters may be used for seismic design of the park improvements using the 2010 CBC.

ASCE 7-05 Section 11 / 2010 CBC Chapter 16 Seismic Design Parameters

Latitude: 38.5475° N Longitude: 121.4704° W	ASCE 7-05 Table/Equation	2010 CBC Table/Equation	Factor/ Coefficient	Value
Short-Period MCE at 0.2s	N/A[1]	N/A[1]	S_S	0.589 g
1.0s Period MCE	N/A[1]	N/A[1]	S_1	0.242 g
Site Class	Table 20.3-1	Table 1613.5.2	--	D
Site Coefficient	Table 11.4-1	Table 1613.5.3(1)	F_a	1.329
Site Coefficient	Table 11.4-2	Table 1613.5.3(2)	F_v	1.915
Adjusted MCE Spectral Response Parameters	Equation 11.4-1	Equation 16-36	S_{MS}	0.783 g
	Equation 11.4-2	Equation 16-37	S_{M1}	0.464 g
Design Spectral Acceleration Parameters	Equation 11.4-3	Equation 16-38	S_{DS}	0.522 g
	Equation 11.4-4	Equation 16-39	S_{D1}	0.309 g
Seismic Design Category	Table 11.6-1	Table 1613.5.6(1)	Occupancy I to IV	D
	Table 11.6-2	Table 1613.5.6(2)	Occupancy I to IV	D

[1]: USGS Seismic Hazard Calculator version 5.1.0

The proposed structures are not considered essential facilities and will not be habitable. Therefore, our scope of services does not include subsurface exploration or evaluation to perform a liquefaction analysis at the site. Based on our experience in the area, we consider the potential for liquefaction occurring at the site to be low.

Soil Expansion Potential

The near-surface soils at the site are relatively granular materials with low plasticity fines. These materials are considered to be non-expansive and not capable of exerting significant expansion pressures on foundations or concrete flatwork. Therefore, special reinforcement of flatwork and foundations, or special moisture conditioning during construction are not considered necessary on this project.

Bearing Capacity

Following site clearing, we anticipate the upper 12 inches of the soils at the site will become disturbed and will require processing and recompaction. Our work indicates that undisturbed native soils and engineered fills constructed in accordance with the recommendations of this report will be capable of supporting the proposed improvements.

Pavement Subgrade Quality

Laboratory testing of the near-surface soils indicates those soils are relatively good quality materials for support of asphalt concrete or concrete pavements and Portland cement concrete flatwork. Laboratory test results on a representative bulk sample of near surface soils revealed an R-value of 64 when tested in accordance with California Test 301 (refer to Figure 8).

Excavation Conditions

During construction, the contractor(s) must provide safely sloped excavations or adequately constructed and braced shoring system(s) in accordance with federal, state, and local safety regulations to protect individuals working in an excavation that may expose them to the danger of moving ground and to support existing improvements as necessary.

Based on the information obtained at the boring locations and experience in the area, we anticipate the soils at the site will be readily excavatable with conventional trenching equipment. However, excavations extending into cohesionless, saturated, and/or disturbed soils will likely require excavation bracing or shoring to control sloughing and caving for shallow spread foundations or casing will be required for drilled pier excavations. The near-surface and subsurface variably cemented soils may be slow to excavate with a standard, rubber-tired backhoe; however, experience has shown that excavators can remove these materials with moderate effort.

Excavations less than five feet deep likely will stand at a near-vertical inclination for short periods of time. However, on-site soils may be susceptible to sloughing and caving within the cohesionless soils encountered at the boring locations or if construction is performed during the rainy season. Excavations encountering groundwater may slough or cave if left open for an extended period of time. Excavations entered by workers must conform to current Occupational Safety and Health Administration (OSHA) requirements (i.e., sloped excavations or braced shoring). If material is stored or heavy equipment is operated near an excavation, stronger shoring must be used to resist the extra pressure due to the superimposed loads.

Groundwater

Based on the groundwater information in the area and our subsurface investigation, a permanent groundwater table should not be a significant factor in development of this site. However, saturation of surface soils should be expected from rainfall, surface run-off, or irrigation. In general, standard sump pit and pumping procedures should be adequate to control localized seepage into required excavations.

Seasonal Water

Infiltrating surface run-off water from irrigation and/or seasonal moisture during the winter and spring months will create saturated surface soil conditions. It is probable that grading operations attempted following the onset of winter rains, prior to prolonged drying periods will be hampered by high soil moisture contents. Such soils, intended for use as engineered fill, will require a prolonged period of dry weather and aeration, or chemical treatment, to reach a moisture content suitable for proper compaction. However, chemical treatment within the turf and landscape areas should be avoided as chemical amendment will prohibit vegetative growth, where used.

Preliminary Soil Corrosion Potential

A composite sample of near-surface soil was submitted to Sunland Analytical Lab for testing to determine pH, chloride and sulfate concentrations, and resistivity to help evaluate the potential for corrosive attack upon buried structures. Results of the soil corrosivity tests are summarized below. A copy of the test results is attached as Figure 9.

Sample Location	Depth (feet)	Soil Type	pH	Chloride Content (ppm)	Sulfate Content (ppm)	Resistivity (ohm-cm)
D1 & D2	0 to 3	SM	5.85	29.1	5.3	4020

The California Department of Transportation Corrosion Technology Section, Office of Materials and Foundations, Corrosion Guidelines Version 1.0, September 2003, considers a site to be corrosive to foundation elements if one or more of the following conditions exists for the representative soil and/or water samples taken: has a chloride concentration greater than or equal to 500 ppm, sulfate concentration greater than or equal to 2000 ppm, or the pH is 5.5 or less. Based on this criterion, the on-site soils are not considered highly corrosive for the sample tested. Table 4.3.1 of the 2005 American Concrete Institute (ACI), *Requirements for Concrete Exposed to Sulfate-Containing Solutions*, indicates the severity of sulfate exposure for the samples tested are *Negligible*. We anticipate ordinary Type I-II Portland cement is suitable for use on this project.

We emphasize that Wallace-Kuhl & Associates (WKA) are not corrosion engineers. Therefore, if it is desired to further define the soil corrosion potential at the site or to determine the need, and design parameters, for cathodic protection, a corrosion engineer should be consulted.

RECOMMENDATIONS

Site Clearing

Initially, improvement areas should be cleared of existing structures (if any), utilities, irrigation, vegetation, debris, and other deleterious materials to expose undisturbed native soils. Where practical, the clearing should extend a minimum of two feet beyond the limits of the proposed structural areas.

Underground utilities within the proposed construction areas should be completely removed or rerouted. Depressions resulting from removal of the clearing operations, underground utilities, and below-grade structures, as identified by our representative should be cleaned out to firm undisturbed soils and the excavation widened, as necessary, to allow access with compaction equipment. Depressions should be backfilled with engineered fill in accordance with the recommendations of this report.

Surface vegetation should be removed from the construction areas by stripping. Strippings should be hauled off-site or placed in landscape areas a minimum of five feet from proposed

structural areas of the site (e.g., buildings, pavements, sidewalks, etc.). Discing of organics into the surface soils may be a suitable alternate to stripping, depending on the condition and quantity of organics at the time of grading. The decision to utilize discing in lieu of stripping should be made by our representative at the time of earthwork construction. Discing operations, if approved, should be observed by our representative and must be continuous until the organics are adequately mixed into the soil to provide a compactable mixture of soil containing minor amounts of organic matter. Pockets or significant concentrations of organics will not be allowed.

Subgrade Preparation

Following clearing and stripping operations, areas to receive fill and at-grade areas should be scarified to a depth of at least 12 inches, moisture conditioned to at least the optimum moisture content, and compacted to at least 90 percent relative compaction. Relative compaction should be based on the maximum dry density as determined in accordance with the American Society of Testing and Materials (ASTM) D1557 Compaction Test.

Loose, soft, or saturated soils should be properly prepared (i.e., scarified and compacted) or excavated to expose firm, undisturbed native materials. Existing depressions and depressions resulting from removal of underground structures (if any) should be cleaned of loose soil and properly backfilled in accordance with the recommendations of this report.

Site clearing and compaction operations should be performed in the presence of our representative who will evaluate the performance of the subgrade under compactive load and identify loose or unstable soils that could require additional subgrade preparation.

Engineered Fill

Any fill placed within the construction area should be an approved material, free of significant quantities of organics or other deleterious materials. The fill should be spread in level layers not exceeding nine inches in loose thickness, compacted to a minimum of 90 percent of the maximum dry density as determined by ASTM D1557. The fill material should be moisture conditioned to at least the optimum moisture content at the time of compaction and maintained in that condition.

The upper six inches of pavement subgrades, if any, should be moisture conditioned to at least the optimum moisture content and uniformly compacted to at least 95 percent of the maximum dry density, regardless of whether final grade is completed by excavation, filling, or left at existing grade.

The on-site soils encountered at the boring locations are considered suitable for use as engineered fill provided they are free of rubble and organic concentrations. Imported fill should be a compactable granular material, have an Expansion Index of 20 or less, and be free of particles larger than three inches in maximum dimension. Our firm should approve import material before being transported to the project site. Additionally, the contractor should supply appropriate documentation for imported fill materials indicating the materials are free of known contamination and within acceptable corrosion limits.

Compaction of the existing subgrade must be performed in the presence of our representative who will evaluate the performance of the subgrade under compactive load and identify loose, soft or unstable soil conditions that could require additional excavation. Loose, soft or saturated soil deposits encountered during compaction operations should be removed to expose firm undisturbed soils and backfilled with engineered fill as recommended in this report.

Utility Trench Backfill

Bedding and initial backfill for utility construction should conform with the pipe manufacturers recommendations and applicable sections of the governing agency standards. General trench backfill should consist of engineered fill backfilled in maximum nine-inch thick loose lifts with each lift compacted to at least 90 percent of the maximum dry density as determined by ASTM D1557. Utility trench backfill within the upper six inches of the final subgrade within pavement areas should be compacted to at least 95 percent of the maximum dry density.

We recommend that all underground utility trenches aligned nearly parallel with flatwork and foundations, if any, be at least five feet from the flatwork or foundations, wherever possible. If this is not practical, the trenches should not encroach on a zone extending at a one horizontal to one vertical (1:1) inclination below the edge of the flatwork or foundations.

Foundation Design

Shallow Foundations

We understand relatively lightly loaded structures will be constructed at the site. If foundations are required to support the structures, the improvement may be supported on a continuous perimeter foundation and continuous or isolated interior foundations. Foundations should be embedded at least 18 inches below lowest adjacent soil grade. Isolated foundations should be at least 24 inches wide; continuous foundations should be at least 12 inches wide. Foundations so established may be sized for maximum allowable soil pressures of 3000 pounds per square foot (psf) for dead plus live load with a 1/3 increase for the short-term effects of wind or seismic

forces. The weight of the foundation concrete extending below adjacent soil grade may be disregarded in sizing computations.

We recommend continuous foundations contain at least four No. 4 bars placed two each near the top and bottom of the foundation; however, final foundation reinforcement should be determined by the project structural engineer.

Resistance to lateral displacement of foundations may be computed using an allowable friction factor of 0.30, multiplied by the effective vertical load on each foundation. Additional lateral resistance can be achieved by considering *passive* soil resistance against the vertical projection of the foundations equivalent to a fluid weighing 300 pounds per cubic foot (pcf). These two modes of resistance (friction and *passive* pressure) should not be added unless the frictional component is reduced by one half due to the mobilization of the resistive forces occurring at different degrees of horizontal movement.

We recommend that all foundation excavations be observed by our representative prior to placement of reinforcement and concrete to verify firm bearing materials are exposed. If unsuitable or unstable materials are encountered at the proposed bottom of foundation elevation, the unsuitable/unstable materials should be removed and replaced with suitable material compacted to 90 percent of the maximum dry density as determined by ASTM D1557 Compaction Test. Alternatively, the foundation may be extended deeper to bear directly on suitable/stable soils.

We estimate total settlement for continuous footing foundations using the recommended maximum net allowable bearing pressures presented above, should be less than one inch. Differential settlements are estimated to be about one-half the total settlement within individual structures and as much as the total settlement between structurally isolated foundations.

These settlement estimates are based on the available boring information, our experience with similar structures and soil conditions, and field verification of suitable bearing soils during foundation construction.

Drilled Cast-In-Place Concrete Pier Foundations (Drilled Piers)

Drilled cast-in-place concrete pier (drilled pier) foundations are considered suitable for support of the shade structure and relatively lightly loaded structures. The piers should extend at least three feet below the lowest adjacent soil grade and have a minimum shaft diameter of 18 inches to help facilitate proper cleaning of the bottom of the pier excavations.

Drilled piers founded within undisturbed native soils may be sized utilizing a maximum allowable vertical bearing capacity of 3000 psf or an allowable skin friction of 300 psf for dead plus live loads, which may be applied over the surface of the pier extending deeper than 12 inches below the lowest adjacent soil grade. Those values may be increased by one-third to include short-term wind or seismic forces. The weight of foundation concrete below grade may be disregarded in sizing computations.

Uplift resistance of drilled pier foundations may be computed using the following resisting forces, where applicable: 1) weight of the pier concrete (150 pounds per cubic foot [pcf]) and, 2) the allowable skin friction of 300 psf applied over the shaft area of the pier. Increased uplift resistance can be achieved by increasing the diameter of the pier or increasing the depth.

Sizing of piers to resist lateral loads can be evaluated using Section 1807.3.2 of the 2010 CBC. A value of 300 pcf for lateral bearing as defined in Table 1806.2 of the CBC may be used for the coefficients S_1 and S_3 for the nonconstrained and constrained conditions, respectively. Per Section 1806.1 of the 2010 CBC, an increase of 1/3 is permitted when using the alternate load combinations in Section 1605.3.2 that include wind or earthquake loads. The upper 12 inches of the subgrade should be neglected for the nonconstrained condition. In addition, as noted in Section 1804.3.4 of the 2010 CBC, "isolated poles for uses such as flagpoles or signs and poles used to support buildings that are not adversely affected by a ½ inch motion at the ground surface due to short-term loads shall be permitted to be design using lateral bearing pressures equal to two times the tabular values."

Reinforcement and concrete should be placed in the pier excavations as soon as possible after excavation is completed to minimize the chances of sidewall caving into the excavations. Although we do not anticipate excessive sloughing of the sidewalls during pier construction, we recommend that the pier contractor be prepared to case the pier holes if conditions require.

The bottom of the pier excavations should be free of loose or disturbed soils prior to placement of concrete. Cleaning of the bearing surface should be verified by the geotechnical engineer prior to concrete placement.

If the drilled piers are constructed in the "dry" (with dry being less than two inches of water at the base of the excavation), the concrete may be placed by the free-fall method, using a short hopper or back-chute to direct the concrete flow out of the truck into a vertical stream of flowing concrete with a relatively small diameter. The stream is directed to avoid hitting the sides of the excavation or any reinforcing cages. For the free-fall method of concrete placement, we recommend the concrete mix be designed with a slump of five to seven inches.

In general, we anticipate the drilled pier excavations will be relatively dry. However, if groundwater is encountered which cannot be controlled such that more than six inches of water accumulates at the bottom of the pier excavation, concrete should be placed using a tremie.

When extracting temporary casings or tremie methods from the excavation, care should be taken to maintain a head of concrete to prevent infiltration of water and soil into the shaft area. The head of concrete should always be greater than the head of water trapped outside the pier or tremie, taking into account the differences in unit weights of concrete and water.

To reduce lateral movement of the drilled shafts, it is necessary to place the concrete for the drilled shafts in intimate contact with the surrounding soil. Any voids or enlargements in the shafts due to over-excavation or temporary casing installation shall be filled with concrete at the time the shaft concrete is placed.

We estimate total settlement for drilled pier foundations using the recommended maximum net allowable bearing pressure and allowable capacities presented above, should be less than one inch. Differential settlements may be as much as the total settlement between individual pier elements. The settlement estimates are based on the available soil information, our experience with similar structures and soil conditions, and field verification of suitable bearing soils during foundation construction.

Site Drainage

Performance of the park improvements is dependent upon control of surface water on the site. The ground adjacent to structural improvements should be sloped away from the structures at a gradient no less than two percent for a distance of at least 10 feet. Roof drainage downspouts, if any, should be connected to nonperforated rigid piping directed to an appropriate drainage point away from the structure. Ponding of surface water should not be allowed within 10 feet of the structures, including exterior flatwork, or pavement areas. Landscape berms, if planned, should not be constructed in such a manner as to promote drainage toward any structures or pavements.

Exterior Concrete Flatwork

Areas to receive exterior concrete flatwork (i.e. sidewalks, etc.) should be scarified and compacted as noted in the Subgrade Preparation section of this report. Flatwork may be placed directly on the prepared subgrade and should be at least four inches thick and reinforced for crack control.

Reinforcement should include chaired No. 4 rebar located on maximum 24-inch centers, both ways, or No. 3 rebar located on maximum 18-inch centers, both ways, throughout the slab. The architect or civil engineer should determine the final thickness, strength, reinforcement, and joint spacing of exterior slab-on-grade concrete. Exterior flatwork next to landscaped areas should be thickened to twice the slab thickness for a width of at least 12 inches to help support lawn mowing equipment and other maintenance equipment.

Accurate and consistent location of the reinforcement at mid-slab is essential to its performance and the risk of shrinkage slab cracking is increased if the reinforcement is not properly located within the slab. We do not recommend the use of welded wire fabric (wire mesh) for reinforcement of slab-on-grade concrete, since it is very difficult to construct at mid-slab depth.

Uniform moisture conditioning of subgrade soils is important to reduce the risk of non-uniform moisture withdrawal from the concrete and the possibility of plastic shrinkage cracks. Practices recommended by the Portland Cement Association (PCA) for proper placement and curing of concrete should be followed during exterior concrete flatwork construction. Flatwork should be independent of the building foundations and felt strips should be used to separate concrete slabs from building foundations.

Pavement Design

The asphalt concrete basketball court should be designed by the project civil engineer or landscape architect. As a minimum, we recommend the basketball court consist of at least 2½ inches of asphalt concrete over four inches of aggregate base compacted to 95 percent of the maximum dry density as determined by ASTM D1557. Asphalt concrete should be compacted to at least 95 percent of the theoretical maximum density.

Where exterior flatwork will be subjected to lightweight vehicle traffic (pick-up trucks), the flatwork should be designed as a pavement. Portland cement concrete should be at least four inches thick and be underlain by at least 4 inches of Class 2 aggregate base over a properly prepared and compacted subgrade as noted in this report. Aggregate base should be compacted to at least 95 percent of the maximum dry density as determined by ASTM D1557. Thicker sections would be required for heavier traffic conditions.

The Portland cement concrete should achieve a minimum compressive strength of 3500 pounds per square inch (psi) at 28 days. For crack control, slabs should contain at least chaired No. 3 reinforcing bars placed on maximum 24-inch centers. Reinforcement must be located at mid-slab depth to be effective. Where exterior flatwork will be designed as a pavement, consideration should be given to using slabs with thickened edges, at least two inches plus the

slab thickness and 36 inches wide in accordance with ACI design standards. Reinforcing details, concrete curing, joint spacing and construction should conform with current PCA and ACI guidelines.

We emphasize that the performance of a pavement is critically dependent upon uniform compaction of the subgrade soils, as well as all engineered fill and utility trench backfill within the limits of the pavements. The upper six inches of pavement subgrades should be compacted to at least 95 percent of the ASTM D1557 maximum dry density at no less than the optimum moisture content, and must be stable under construction traffic prior to placement of aggregate base. Class 2 aggregate base should be compacted to at least 95 percent of the ASTM D1557 maximum dry density.

It has been our experience that pavement distress and failures may occur where a non-uniform or disturbed subgrade soil condition is created. Subgrade disturbances can result if pavement subgrade preparation is performed prior to underground utility construction and/or if a significant time period passes between subgrade preparation and placement of aggregate base. Therefore, we recommend that final pavement subgrade preparation (i.e. scarification, moisture conditioning, and compaction) be performed just prior to aggregate base placement.

Materials quality and construction within the structural section of the pavement should conform to the applicable provisions of the latest editions of the *Caltrans Standard Specifications*.

Construction Testing and Observation

Foundation construction should be performed in accordance with the recommendations of this report. Representatives of WKA should be present during foundation construction to observe and test the subgrade to verify compliance with our recommendations and the project specifications. These services are considered as a continuation of the geotechnical engineering report and should be provided by our firm to avoid misinterpretation of the recommendations or the intent of the recommendations. However, these services are beyond the scope of work authorized for this investigation.

We also recommend that our firm be retained to review final plans and specifications to determine if the intent of our recommendations has been implemented into those documents.

LIMITATIONS

Our recommendations are based upon the information provided regarding the proposed project, combined with our analysis of site conditions revealed by the field exploration and laboratory testing programs. We have used our best engineering judgment based upon the information provided and the data generated from our investigation.

This report has been prepared in substantial compliance with generally accepted geotechnical engineering practices that exist in the area of the project at the time the report was prepared. No warranty, either express or implied, is provided.

If the proposed construction is modified or re-sited; or, if it is found during construction that subsurface conditions differ from those we encountered at our boring and bulk sample locations, we should be afforded the opportunity to review the new information or changed conditions to determine if our conclusions and recommendations must be modified.

We emphasize that this report is applicable only to the proposed construction and the investigated site, and should not be utilized for construction on any other site.

We appreciate the opportunity to provide you with our services. Please contact us if you have any questions or require additional information.

Wallace-Kuhl & Associates

Matthew S. Moyneur
Project Engineer

REGISTERED PROFESSIONAL ENGINEER
MATTHEW S. MOYNEUR
NO. 2920
Exp. 6/30/12
GEOTECHNICAL
STATE OF CALIFORNIA

Attachments: Vicinity Map (Figure 1)
Site Plan (Figure 2)
Logs of Soil Borings (Figures 3 and 4)
Unified Soil Classification System (Figure 5)
Triaxial Compression Test Results (Figure 6)
Expansion Index Test Results (Figure 7)
Resistance Value Test Results (Figure 8)
Corrosion Test Results (Figure 9)

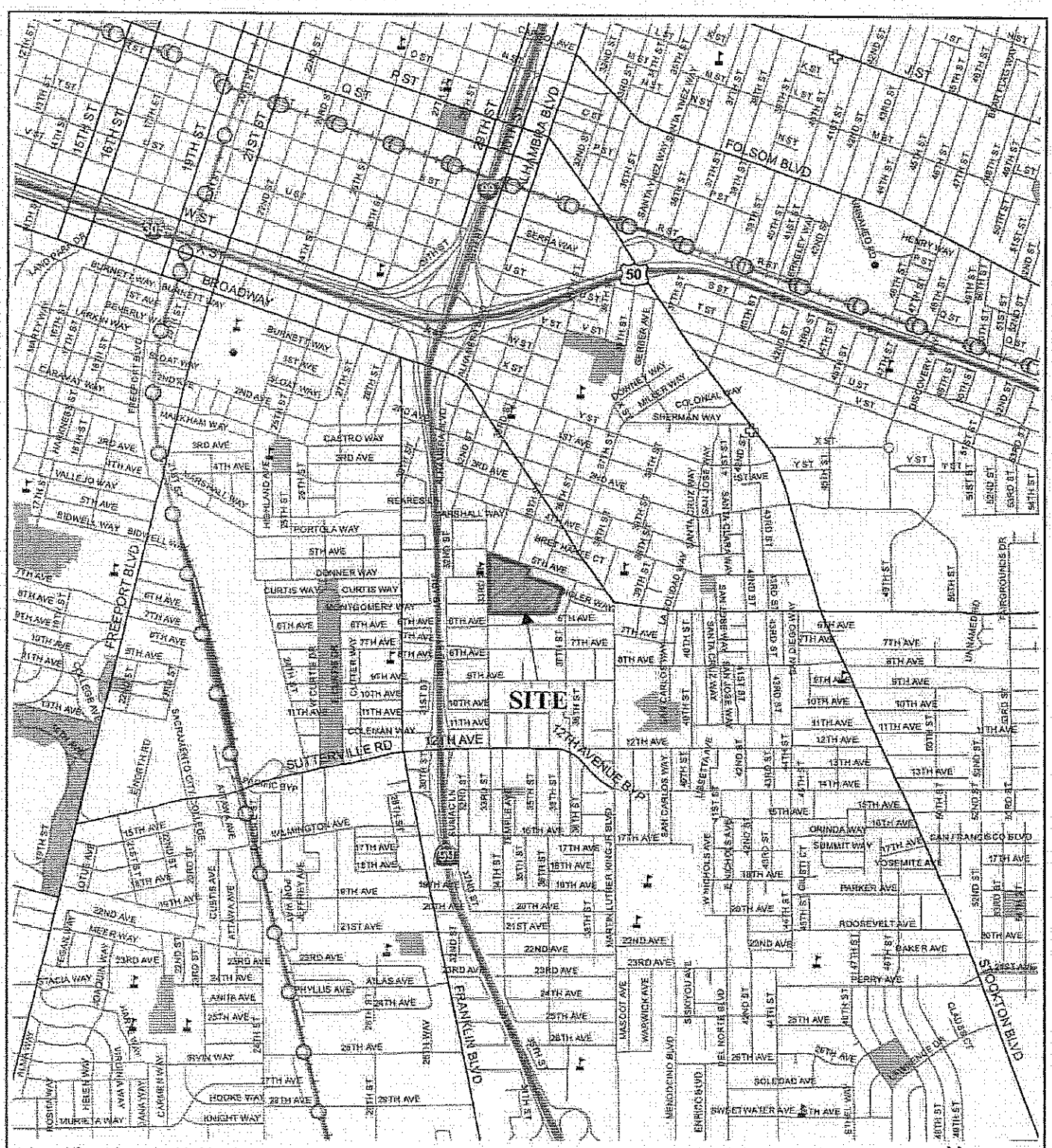

Adapted from data provided by the Sacramento Area Council of Governments, 2008.
Projection: NAD 83, California State Plane, Zone II

N

0 1,000 2,000
Feet

Wallace Kuhl & Associates

VICINITY MAP

McCLATCHY PARK

Sacramento, California

FIGURE	1
DRAWN BY	TJC
CHECKED BY	MSM
PROJECT MGR	MSM
DATE	10/11

WKA NO. 8890.16P

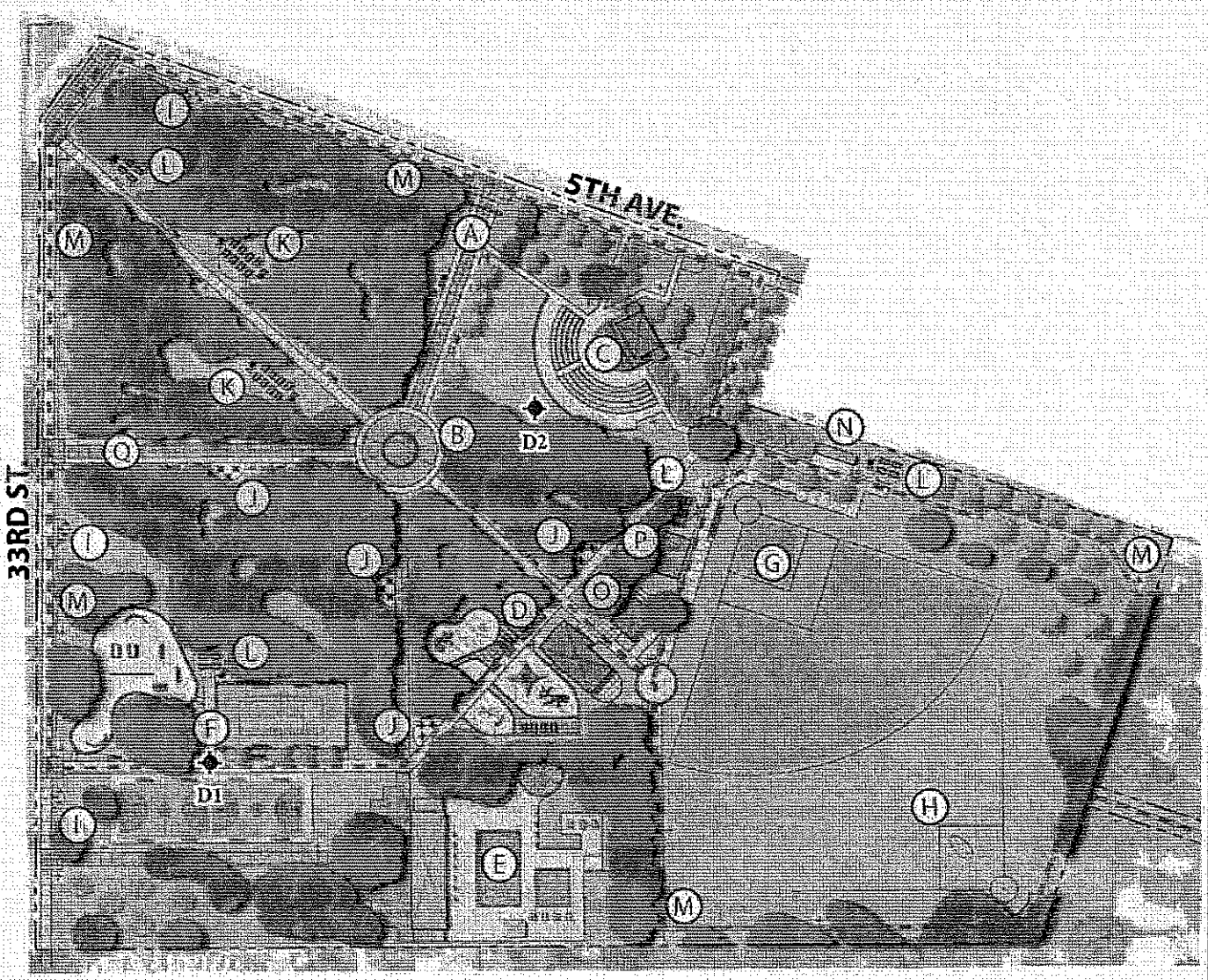

Adapted from a drawing provided by the City of Sacramento Department of Parks and Recreation.
Projection: NAD 83, California State Plane, Zone II

Legend

◆ Approximate soil boring location

N

0 75 150

Feet

Wallace Kuhl

SITE PLAN

McCLATCHY PARK

Sacramento, California

FIGURE	2
DRAWN BY	TJC
CHECKED BY	MSM
PROJECT MGR	MSM
DATE	10/11

WKA NO. 8890.16P

Project: McClatchy Park Improvements
Project Location: Sacramento, California
WKA Number: 8890.16P

LOG OF SOIL BORING D1

Sheet 1 of 1

Date(s) Drilled	9/30/11	Logged By	MSM	Checked By	MSM
Drilling Method	Bucket Auger	Drilling Contractor	WKA	Total Depth of Drill Hole	10.0 feet
Drill Rig Type	Hand Auger	Diameter(s) of Hole, inches	4 inches	Approx. Surface Elevation, ft MSL	
Groundwater Depth [Elevation], feet	Not Encountered	Sampling Method(s)	Open drive sampler with 6-inch sleeve	Drill Hole Backfill	Auger Cuttings
Remarks	Bulk sample obtained from 0 to 3 feet.			Driving Method and Drop	10 lb hammer, 18 inch drop

ELEVATION, feet	DEPTH, feet	GRAPHIC LOG	ENGINEERING CLASSIFICATION AND DESCRIPTION	SAMPLE DATA: SAMPLE	SAMPLE NUMBER	NUMBER OF BLOWS	TEST DATA: MOISTURE CONTENT, %	DRY UNIT WEIGHT, pcf	ADDITIONAL TESTS
			Brown and dark brown, partially cemented, silty fine to medium sand with trace clay (SM)						
	5		Brown, partially cemented, silty fine to medium sand with trace clay (SM)		D1-1		9.2	92	
					D1-2		6.9	88	
	10		End of boring at ~10 feet below the ground surface. Groundwater was not encountered.						

BORING LOG 8890.16P - MCCLATCHY PARK GPJ - WKA GDT 10/18/11 1:25 PM

Wallace Kuhl & Associates

FIGURE 3

Project: McClatchy Park Improvements **Project Location:** Sacramento, California **WKA Number:** 8890.16P	**LOG OF SOIL BORING D2** Sheet 1 of 1

Date(s) Drilled	9/30/11	Logged By	MSM	Checked By	MSM
Drilling Method	Bucket Auger	Drilling Contractor	WKA	Total Depth of Drill Hole	10.0 feet
Drill Rig Type	Hand Auger	Diameter(s) of Hole, inches	4 inches	Approx. Surface Elevation, ft MSL	
Groundwater Depth [Elevation], feet	Not Encountered	Sampling Method(s)	Open drive sampler with 6-inch sleeve	Drill Hole Backfill	Auger Cuttings
Remarks	Bulk sample obtained from 0 to 3 feet.			Driving Method and Drop	10 lb hammer, 18 inch drop

ELEVATION, feet	DEPTH, feet	GRAPHIC LOG	ENGINEERING CLASSIFICATION AND DESCRIPTION	SAMPLE	SAMPLE NUMBER	NUMBER OF BLOWS	MOISTURE CONTENT, %	DRY UNIT WEIGHT, pcf	ADDITIONAL TESTS
			Dark brown and brown, silty fine to medium sand (SM)						
			Brown, partially cemented, silty fine to medium sand with trace clay (SM)						
	5				D2-1		12.5	106	TR
					D2-2		7.4	101	
	10		End of boring at ~10 feet below the ground surface. Groundwater was not encountered.						

BORING LOG 8890.16P MCCLATCHY PARK.GPJ WKA.GDT 10/10/11 1:28 PM

Wallace Kuhl & Associates

FIGURE 4

UNIFIED SOIL CLASSIFICATION SYSTEM

MAJOR DIVISIONS		SYMBOL	CODE	TYPICAL NAMES
COARSE GRAINED SOILS (More than 50% of soil > no. 200 sieve size)	GRAVELS (More than 50% of coarse fraction > no. 4 sieve size)	GW		Well graded gravels or gravel - sand mixtures, little or no fines
		GP		Poorly graded gravels or gravel - sand mixtures, little or no fines
		GM		Silty gravels, gravel - sand - silt mixtures
		GC		Clayey gravels, gravel - sand - clay mixtures
	SANDS (50% or more of coarse fraction < no. 4 sieve size)	SW		Well graded sands or gravelly sands, little or no fines
		SP		Poorly graded sands or gravelly sands, little or no fines
		SM		Silty sands, sand - silt mixtures
		SC		Clayey sands, sand - clay mixtures
FINE GRAINED SOILS (50% or more of soil < no. 200 sieve size)	SILTS & CLAYS LL < 50	ML		Inorganic silts and very fine sands, rock flour, silty or clayey fine sands or clayey silts with slight plasticity
		CL		Inorganic clays of low to medium plasticity, gravelly clays, sandy clays, silty clays, lean clays
		OL		Organic silts and organic silty clays of low plasticity
	SILTS & CLAYS LL ≥ 50	MH		Inorganic silts, micaceous or diatomaceous fine sandy or silty soils, elastic silts
		CH		Inorganic clays of high plasticity, fat clays
		OH		Organic clays of medium to high plasticity, organic silty clays, organic silts
HIGHLY ORGANIC SOILS		Pt		Peat and other highly organic soils
ROCK		RX		Rocks, weathered to fresh
FILL		FILL		Artificially placed fill material

OTHER SYMBOLS

= Drive Sample: 2-1/2" O.D. Modified California sampler

= Drive Sampler: no recovery

= SPT Sampler

= Initial Water Level

= Final Water Level

= Estimated or gradational material change line

= Observed material change line

Laboratory Tests

PI = Plasticity Index

EI = Expansion Index

UCC = Unconfined Compression Test

TR = Triaxial Compression Test

GR = Gradational Analysis (Sieve)

K = Permeability Test

GRAIN SIZE CLASSIFICATION

CLASSIFICATION	RANGE OF GRAIN SIZES	
	U.S. Standard Sieve Size	Grain Size in Millimeters
BOULDERS	Above 12"	Above 305
COBBLES	12" to 3"	305 to 76.2
GRAVEL	3" to No. 4	76.2 to 4.76
coarse (c)	3" to 3/4"	76.2 to 19.1
fine (f)	3/4" to No. 4	19.1 to 4.76
SAND	No. 4 to No. 200	4.76 to 0.074
coarse (c)	No. 4 to No. 10	4.76 to 2.00
medium (m)	No. 10 to No. 40	2.00 to 0.420
fine (f)	No. 40 to No. 200	0.420 to 0.074
SILT & CLAY	Below No. 200	Below 0.074

WallaceKuhl & ASSOCIATES

UNIFIED SOIL CLASSIFICATION SYSTEM

McCLATCHY PARK

Sacramento, California

FIGURE	5
DRAWN BY	TJC
CHECKED BY	MSM
PROJECT MGR	MSM
DATE	10/11
WKA NO. 8890.16P	

TRIAXIAL COMPRESSION TEST

ASTM D4767

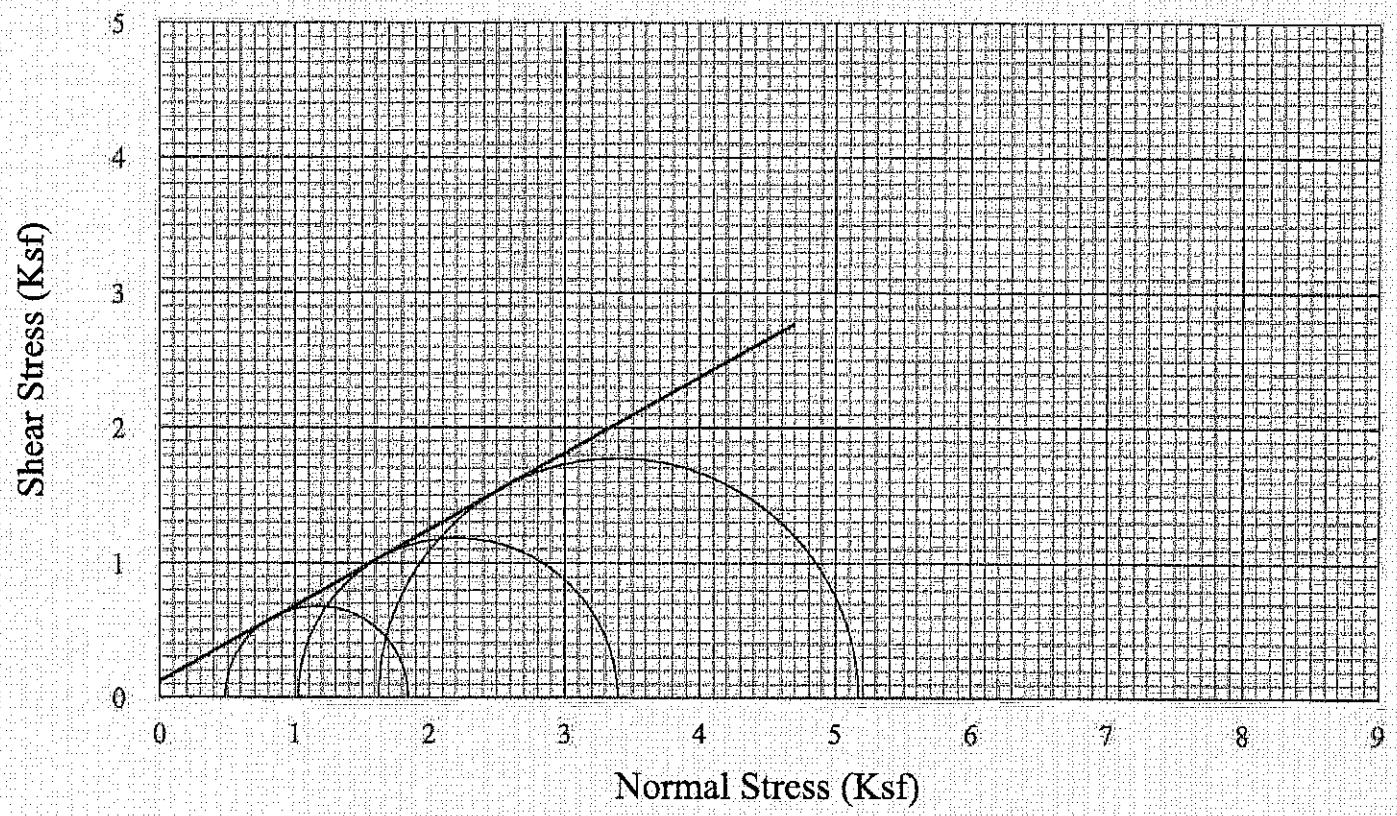

SAMPLE NO. :	D2-11	DRY DENSITY (PCF) :	106.2
SAMPLE CONDITION :	Undisturbed	INITIAL MOISTURE (%) :	12.5
SAMPLE DESCRIPTION :	Brown, silty fine to medium sand with trace clay	FINAL MOISTURE (%) :	19.3
		ANGLE OF INTERNAL FRICTION (ø) :	29°
		COHESION (PSF) :	120

WallaceKuhl & ASSOCIATES

TRIAXIAL COMPRESSION TEST RESULTS

McCLATCHY PARK

Sacramento, California

FIGURE	6
DRAWN BY	TJC
CHECKED BY	MSM
PROJECT MGR	MSM
DATE	10/11

WKA NO. 8890.16P

EXPANSION INDEX TEST RESULTS

ASTM D4829

MATERIAL DESCRIPTION: Brown, silty fine to medium sand with trace clay

LOCATION: D1 & D2

Sample Depth	Pre-Test Moisture (%)	Post-Test Moisture (%)	Dry Density (pcf)	Expansion Index
0'-3'	12.0	24.8	96.0	**9**

CLASSIFICATION OF EXPANSIVE SOIL *

EXPANSION INDEX	POTENTIAL EXPANSION
0 - 20	**Very Low**
21 - 50	Low
51 - 90	Medium
91 - 130	High
Above 130	Very High

* From ASTM D4829, Table 1

WallaceKuhl & ASSOCIATES

EXPANSION INDEX TEST RESULTS

McCLATCHY PARK

Sacramento, California

FIGURE	7
DRAWN BY	TJC
CHECKED BY	MSM
PROJECT MGR	MSM
DATE	10/11
WKA NO. 8890.16P	

RESISTANCE VALUE TEST RESULTS
(California Test 301)

MATERIAL DESCRIPTION: Brown, silty fine to medium sand

LOCATION: D1 & D2 (0'-3')

Specimen No.	Dry Unit Weight (pcf)	Moisture @ Compaction (%)	Exudation Pressure (psi)	Expansion Pressure (dial)	Expansion Pressure (psf)	R Value
1	109	15.5	141	25	108	57
2	112	14.5	314	45	195	64
3	113	13.0	764	85	368	67

R-Value at 300 psi exudation pressure = 64

WallaceKuhl & ASSOCIATES

RESISTANCE VALUE TEST RESULTS

McCLATCHY PARK

Sacramento, California

FIGURE	8
DRAWN BY	TJC
CHECKED BY	MSM
PROJECT MGR	MSM
DATE	10/11
WKA NO. 8890.16P	

Sunland Analytical
11353 Pyrites Way, Suite 4
Rancho Cordova, CA 95670
(916) 852-8557

Date Reported 10/05/2011
Date Submitted 09/30/2011

To: Matt Moyneur
Wallace-Kuhl & Assoc.
3050 Industrial Blvd.
West Sacramento, CA 95691

From: Gene Oliphant, Ph.D. \ Randy Horney
General Manager \ Lab Manager

The reported analysis was requested for the following location:
Location : 8890.16P/MCCLATCHY Site ID : D1 & D2 (0-3').
Thank you for your business.

* For future reference to this analysis please use SUN # 61106-125428.

EVALUATION FOR SOIL CORROSION

Soil pH	5.85	
Minimum Resistivity	4.02 ohm-cm (x1000)	
Chloride	29.1 ppm	00.00291 %
Sulfate	5.3 ppm	00.00053 %

METHODS
pH and Min.Resistivity CA DOT Test #643
Sulfate CA DOT Test #417, Chloride CA DOT Test #422

WallaceKuhl & ASSOCIATES

CORROSION TEST RESULTS
McCLATCHY PARK
Sacramento, California

FIGURE	9
DRAWN BY	TJC
CHECKED BY	MSM
PROJECT MGR	MSM
DATE	10/11
WKA NO. 8890.16P	

Scheduling

EC-1

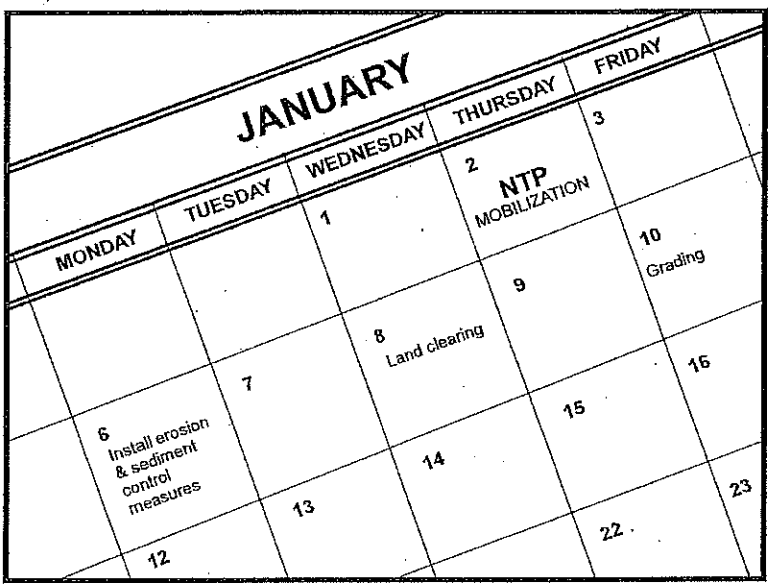

Categories

EC	Erosion Control	☑
SE	Sediment Control	☒
TC	Tracking Control	☒
WE	Wind Erosion Control	☒
NS	Non-Stormwater Management Control	
WM	Waste Management and Materials Pollution Control	

Legend:

☑ **Primary Objective**

☒ **Secondary Objective**

Targeted Constituents

Sediment	☑
Nutrients	
Trash	
Metals	
Bacteria	
Oil and Grease	
Organics	

Potential Alternatives

None

Description and Purpose

Scheduling is the development of a written plan that includes sequencing of construction activities and the implementation of BMPs such as erosion control and sediment control while taking local climate (rainfall, wind, etc.) into consideration. The purpose is to reduce the amount and duration of soil exposed to erosion by wind, rain, runoff, and vehicle tracking, and to perform the construction activities and control practices in accordance with the planned schedule.

Suitable Applications

Proper sequencing of construction activities to reduce erosion potential should be incorporated into the schedule of every construction project especially during rainy season. Use of other, more costly yet less effective, erosion and sediment control BMPs may often be reduced through proper construction sequencing.

Limitations

- Environmental constraints such as nesting season prohibitions reduce the full capabilities of this BMP.

Implementation

- Avoid rainy periods. Schedule major grading operations during dry months when practical. Allow enough time before rainfall begins to stabilize the soil with vegetation or physical means or to install sediment trapping devices.
- Plan the project and develop a schedule showing each phase

of construction. Clearly show how the rainy season relates to soil disturbing and re-stabilization activities. Incorporate the construction schedule into the SWPPP.

- Include on the schedule, details on the rainy season implementation and deployment of:
  - Erosion control BMPs
  - Sediment control BMPs
  - Tracking control BMPs
  - Wind erosion control BMPs
  - Non-stormwater BMPs
  - Waste management and materials pollution control BMPs
- Include dates for activities that may require non-stormwater discharges such as dewatering, sawcutting, grinding, drilling, boring, crushing, blasting, painting, hydro-demolition, mortar mixing, pavement cleaning, etc.
- Work out the sequencing and timetable for the start and completion of each item such as site clearing and grubbing, grading, excavation, paving, foundation pouring utilities installation, etc., to minimize the active construction area during the rainy season.
  - Sequence trenching activities so that most open portions are closed before new trenching begins.
  - Incorporate staged seeding and re-vegetation of graded slopes as work progresses.
  - Schedule establishment of permanent vegetation during appropriate planting time for specified vegetation.
- Non-active areas should be stabilized as soon as practical after the cessation of soil disturbing activities or one day prior to the onset of precipitation.
- Monitor the weather forecast for rainfall.
- When rainfall is predicted, adjust the construction schedule to allow the implementation of soil stabilization and sediment treatment controls on all disturbed areas prior to the onset of rain.
- Be prepared year round to deploy erosion control and sediment control BMPs. Erosion may be caused during dry seasons by un-seasonal rainfall, wind, and vehicle tracking. Keep the site stabilized year round, and retain and maintain rainy season sediment trapping devices in operational condition.
- Apply permanent erosion control to areas deemed substantially complete during the project's defined seeding window.

Costs

Construction scheduling to reduce erosion may increase other construction costs due to reduced economies of scale in performing site grading. The cost effectiveness of scheduling techniques should be compared with the other less effective erosion and sedimentation controls to achieve a cost effective balance.

Inspection and Maintenance

- Verify that work is progressing in accordance with the schedule. If progress deviates, take corrective actions.
- Amend the schedule when changes are warranted.
- Amend the schedule prior to the rainy season to show updated information on the deployment and implementation of construction site BMPs.

References

Stormwater Quality Handbooks Construction Site Best Management Practices (BMPs) Manual, State of California Department of Transportation (Caltrans), November 2000.

Stormwater Management for Construction Activities Developing Pollution Prevention Plans and Best Management Practices (EPA 832-R-92-005), U.S. Environmental Protection Agency, Office of Water, September 1992.

Preservation Of Existing Vegetation EC-2

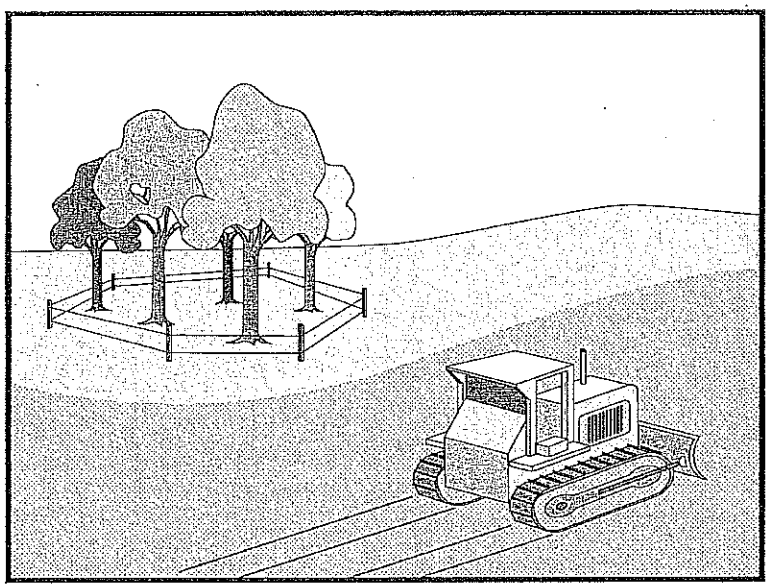

Categories

EC	Erosion Control	☑
SE	Sediment Control	
TC	Tracking Control	
WE	Wind Erosion Control	
NS	Non-Stormwater Management Control	
WM	Waste Management and Materials Pollution Control	

Legend:

☑ **Primary Objective**

☒ **Secondary Objective**

Targeted Constituents

Sediment	☑
Nutrients	
Trash	
Metals	
Bacteria	
Oil and Grease	
Organics	

Potential Alternatives

None

Description and Purpose

Carefully planned preservation of existing vegetation minimizes the potential of removing or injuring existing trees, vines, shrubs, and grasses that protect soil from erosion.

Suitable Applications

Preservation of existing vegetation is suitable for use on most projects. Large project sites often provide the greatest opportunity for use of this BMP. Suitable applications include the following:

- Areas within the site where no construction activity occurs, or occurs at a later date. This BMP is especially suitable to multi year projects where grading can be phased.
- Areas where natural vegetation exists and is designated for preservation. Such areas often include steep slopes, watercourse, and building sites in wooded areas.
- Areas where local, state, and federal government require preservation, such as vernal pools, wetlands, marshes, certain oak trees, etc. These areas are usually designated on the plans, or in the specifications, permits, or environmental documents.
- Where vegetation designated for ultimate removal can be temporarily preserved and be utilized for erosion control and sediment control.

Limitations

- Requires forward planning by the owner/developer,

contractor, and design staff.

- Limited opportunities for use when project plans do not incorporate existing vegetation into the site design.
- For sites with diverse topography, it is often difficult and expensive to save existing trees while grading the site satisfactory for the planned development.

Implementation

The best way to prevent erosion is to not disturb the land. In order to reduce the impacts of new development and redevelopment, projects may be designed to avoid disturbing land in sensitive areas of the site (e.g., natural watercourses, steep slopes), and to incorporate unique or desirable existing vegetation into the site's landscaping plan. Clearly marking and leaving a buffer area around these unique areas during construction will help to preserve these areas as well as take advantage of natural erosion prevention and sediment trapping.

Existing vegetation to be preserved on the site must be protected from mechanical and other injury while the land is being developed. The purpose of protecting existing vegetation is to ensure the survival of desirable vegetation for shade, beautification, and erosion control. Mature vegetation has extensive root systems that help to hold soil in place, thus reducing erosion. In addition, vegetation helps keep soil from drying rapidly and becoming susceptible to erosion. To effectively save existing vegetation, no disturbances of any kind should be allowed within a defined area around the vegetation. For trees, no construction activity should occur within the drip line of the tree.

Timing

- Provide for preservation of existing vegetation prior to the commencement of clearing and grubbing operations or other soil disturbing activities in areas where no construction activity is planned or will occur at a later date.

Design and Layout

- Mark areas to be preserved with temporary fencing. Include sufficient setback to protect roots.
  - Orange colored plastic mesh fencing works well.
  - Use appropriate fence posts and adequate post spacing and depth to completely support the fence in an upright position.
- Locate temporary roadways, stockpiles, and layout areas to avoid stands of trees, shrubs, and grass.
- Consider the impact of grade changes to existing vegetation and the root zone.
- Maintain existing irrigation systems where feasible. Temporary irrigation may be required.
- Instruct employees and subcontractors to honor protective devices. Prohibit heavy equipment, vehicular traffic, or storage of construction materials within the protected area.

Costs

There is little cost associated with preserving existing vegetation if properly planned during the project design, and these costs may be offset by aesthetic benefits that enhance property values. During construction, the cost for preserving existing vegetation will likely be less than the cost of applying erosion and sediment controls to the disturbed area. Replacing vegetation inadvertently destroyed during construction can be extremely expensive, sometimes in excess of $10,000 per tree.

Inspection and Maintenance

During construction, the limits of disturbance should remain clearly marked at all times. Irrigation or maintenance of existing vegetation should be described in the landscaping plan. If damage to protected trees still occurs, maintenance guidelines described below should be followed:

- Verify that protective measures remain in place. Restore damaged protection measures immediately.
- Serious tree injuries shall be attended to by an arborist.
- Damage to the crown, trunk, or root system of a retained tree shall be repaired immediately.
- Trench as far from tree trunks as possible, usually outside of the tree drip line or canopy. Curve trenches around trees to avoid large roots or root concentrations. If roots are encountered, consider tunneling under them. When trenching or tunneling near or under trees to be retained, place tunnels at least 18 in. below the ground surface, and not below the tree center to minimize impact on the roots.
- Do not leave tree roots exposed to air. Cover exposed roots with soil as soon as possible. If soil covering is not practical, protect exposed roots with wet burlap or peat moss until the tunnel or trench is ready for backfill.
- Cleanly remove the ends of damaged roots with a smooth cut.
- Fill trenches and tunnels as soon as possible. Careful filling and tamping will eliminate air spaces in the soil, which can damage roots.
- If bark damage occurs, cut back all loosened bark into the undamaged area, with the cut tapered at the top and bottom and drainage provided at the base of the wood. Limit cutting the undamaged area as much as possible.
- Aerate soil that has been compacted over a trees root zone by punching holes 12 in. deep with an iron bar, and moving the bar back and forth until the soil is loosened. Place holes 18 in. apart throughout the area of compacted soil under the tree crown.
- Fertilization
  - Fertilize stressed or damaged broadleaf trees to aid recovery.
  - Fertilize trees in the late fall or early spring.

- Apply fertilizer to the soil over the feeder roots and in accordance with label instructions, but never closer than 3 ft to the trunk. Increase the fertilized area by one-fourth of the crown area for conifers that have extended root systems.

- Retain protective measures until all other construction activity is complete to avoid damage during site cleanup and stabilization.

References

County of Sacramento Tree Preservation Ordinance, September 1981.

Stormwater Quality Handbooks Construction Site Best Management Practices (BMPs) Manual, State of California Department of Transportation (Caltrans), November 2000.

Stormwater Management of the Puget Sound Basin, Technical Manual, Publication #91-75, Washington State Department of Ecology, February 1992.

Water Quality Management Plan for The Lake Tahoe Region, Volume II, Handbook of Management Practices, Tahoe Regional Planning Agency, November 1988.

Hydraulic Mulch

EC-3

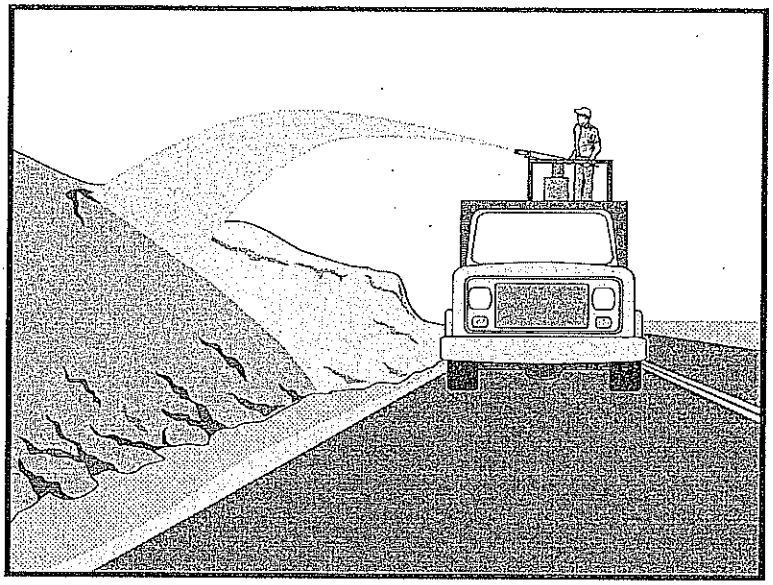

Categories

EC	Erosion Control	☑
SE	Sediment Control	
TC	Tracking Control	
WE	Wind Erosion Control	☒
NS	Non-Stormwater Management Control	
WM	Waste Management and Materials Pollution Control	

Legend:

☑ **Primary Category**

☒ **Secondary Category**

Targeted Constituents

Sediment	☑
Nutrients	
Trash	
Metals	
Bacteria	
Oil and Grease	
Organics	

Potential Alternatives

EC-4 Hydroseeding

EC-5 Soil Binders

EC-6 Straw Mulch

EC-7 Geotextiles and Mats

EC-8 Wood Mulching

EC-14 Compost Blanket

EC-16 Non-Vegetative Stabilization

Description and Purpose

Hydraulic Mulch consists of various types of fibrous materials mixed with water and sprayed onto the soil surface in slurry form to provide a layer of temporary protection from wind and water erosion.

Suitable Applications

Hydraulic mulch as a temporary, stand alone, erosion control BMP is suitable for disturbed areas that require temporary protection from wind and water erosion until permanent soil stabilization activities commence. Examples include:

- Rough-graded areas that will remain inactive for longer than permit-required thresholds (e.g., 14 days) or otherwise require stabilization to minimize erosion or prevent sediment discharges.
- Soil stockpiles.
- Slopes with exposed soil between existing vegetation such as trees or shrubs.
- Slopes planted with live, container-grown vegetation or plugs.
- Slopes burned by wildfire.

Hydraulic mulch can also be applied to augment other erosion control BMPs such as:

- In conjunction with straw mulch (see EC-6 Straw Mulch) where the rate of hydraulic mulch is reduced to 100-500 lbs per acre and the slurry is applied over the straw as a tackifying agent to hold the straw in place.
- Supplemental application of soil amendments, such as fertilizer, lime, gypsum, soil bio-stimulants or compost.

Limitations

In general, hydraulic mulch is not limited by slope length, gradient or soil type. However, the following limitations typically apply:

- Most hydraulic mulch applications, particularly bonded fiber matrices (BFMs), require at least 24 hours to dry before rainfall occurs.
- Temporary applications (i.e., without a vegetative component) may require a second application in order to remain effective for an entire rainy season.
- Treatment areas must be accessible to hydraulic mulching equipment.
- Availability of water sources in remote areas for mixing and application.
- As a stand-alone temporary BMP, hydraulic mulches may need to be re-applied to maintain their erosion control effectiveness, typically after 6-12 months depending on the type of mulch used.
- Availability of hydraulic mulching equipment may be limited just prior to the rainy season and prior to storms due to high demand.
- Cellulose fiber mulches alone may not perform well on steep slopes or in course soils.

Implementation

- Where feasible, it is preferable to prepare soil surfaces prior to application by roughening embankments and fill areas with a crimping or punching type roller or by track walking.
- The majority of hydraulic mulch applications do not necessarily require surface/soil preparation (See EC-15 Soil Preparation) although in almost every case where re-vegetation is included as part of the practice, soil preparation can be beneficial. One of the advantages of hydraulic mulch over other erosion control methods is that it can be applied in areas where soil preparation is precluded by site conditions, such as steep slopes, rocky soils, or inaccessibility.
- Avoid mulch over spray onto roads, sidewalks, drainage channels, existing vegetation, etc.
- Hydraulic mulching is generally performed utilizing specialized machines that have a large water-holding/mixing tank and some form of mechanical agitation or other recirculation method to keep water, mulch and soil amendments in suspension. The mixed hydraulic slurry can be applied from a tower sprayer on top of the machine or by extending a hose to areas remote from the machine.

- Where possible apply hydraulic mulch from multiple directions to adequately cover the soil. Application from a single direction can result in shadowing, uneven coverage and failure of the BMP.
- Hydraulic mulch can also include a vegetative component, such as seed, rhizomes, or stolons (see EC-4 Hydraulic Seed).
- Typical hydraulic mulch application rates range from 2,000 pounds per acre for standard mulches (SMs) to 3,500 pounds per acre for BFMs. However, the required amount of hydraulic mulch to provide adequate coverage of exposed topsoil may appear to exceed the standard rates when the roughness of the soil surface is changed due to soil preparation methods (see EC-15 Soil Preparation) or by slope gradient.
- Other factors such as existing soil moisture and soil texture can have a profound effect on the amount of hydraulic mulch required (i.e. application rate) applied to achieve an erosion-resistant covering.
- Avoid use of mulch without a tackifier component, especially on slopes.
- Mulches used in the hydraulic mulch slurry can include:
  - Cellulose fiber
  - Thermally-processed wood fibers
  - Cotton
  - Synthetics
  - Compost (see EC-14, Compost Blanket)
- Additional guidance on the comparison and selection of temporary slope stabilization methods is provided in Appendix F of the Handbook.

Categories of Hydraulic Mulches

Standard Hydraulic Mulch (SM)

Standard hydraulic mulches are generally applied at a rate of 2,000 pounds per acre and are manufactured containing around 5% tackifier (i.e. soil binder), usually a plant-derived guar or psyllium type. Most standard mulches are green in color derived from food-color based dyes.

Hydraulic Matrices (HM) and Stabilized Fiber Matrices (SFM)

Hydraulic matrices and stabilized fiber matrices are slurries which contain increased levels of tackifiers/soil binders; usually 10% or more by weight. HMs and SFMs have improved performance compared to a standard hydraulic mulch (SM) because of the additional percentage of tackifier and because of their higher application rates, typically 2,500 – 4,000 pounds per acre. Hydraulic matrices can include a mixture of fibers, for example, a 50/50 blend of paper and wood fiber. In the case of an SFM, the tackifier/soil binder is specified as a polyacrylamide (PAM).

Bonded Fiber Matrix (BFM)

Bonded fiber matrices (BFMs) are hydraulically-applied systems of fibers, adhesives (typically guar based) and chemical cross-links. Upon drying, the slurry forms an erosion-resistant blanket that prevents soil erosion and promotes vegetation establishment. The cross-linked adhesive in the BFM should be biodegradable and should not dissolve or disperse upon re-wetting. BFMs are typically applied at rates from 3,000 to 4,000 lbs/acre based on the manufacturer's recommendation. BFMs should not be applied immediately before, during or immediately after rainfall or if the soil is saturated. Depending on the product, BFMs typically require 12 to 24 hours to dry and become effective.

Mechanically-Bonded Fiber Matrices (MBFM)

Mechanically-bonded fiber matrices (MBFMs) are hydraulically applied systems similar to BFM that use crimped synthetic fibers and PAM and are typically applied to a slope at a higher application rate than a standard BFM.

Hydraulic Compost Matrix (HCM)

Hydraulic compost matrix (HCM) is a field-derived practice whereby finely graded or sifted compost is introduced into the hydraulic mulch slurry. A guar-type tackifier can be added for steeper slope applications as well as any specified seed mixtures. A HCM can help to accelerate seed germination and growth. HCMs are particularly useful as an in-fill for three-dimensional re-vegetation geocomposites, such as turf reinforcement mats (TRM) (see EC-7 Geotextiles and Mats).

Costs

Average installed costs for hydraulic mulch categories are is provided in Table 1, below.

Table 1
HYDRAULIC MULCH BMPs
INSTALLED COSTS

BMP	Installed Cost/Acre
Standard Hydraulic Mulching (SM)	$1,700 - $3,600 per acre
Hydraulic Matrices (HM) and Stabilized Fiber Matrices	
Guar-based	$2,000 - $4,000 per acre
PAM-based	$2,500 - $5,610 per acre
Bonded Fiber Matrix (BFM)	$3,900 - $6,900 per acre
Mechanically Bonded Fiber Matrix (MBFM)	$4,500 - $6,000 per acre
Hydraulic Compost Matrix (HCM)	$3,000 - $3,500 per acre

Source: Caltrans Soil Stabilization BMP Research for Erosion and Sediment Controls, July 2007

Inspection and Maintenance

- Maintain an unbroken, temporary mulched ground cover throughout the period of construction when the soils are not being reworked.
- BMPs must be inspected in accordance with General Permit requirements for the associated project type and risk level. It is recommended that at a minimum, BMPs be inspected

weekly, prior to forecasted rain events, daily during extended rain events, and after the conclusion of rain events.

- Areas where erosion is evident should be repaired and BMPs re-applied as soon as possible. Care should be exercised to minimize the damage to protected areas while making repairs, as any area damaged will require re-application of BMPs.
- Compare the number of bags or weight of applied mulch to the area treated to determine actual application rates and compliance with specifications.

References

Soil Stabilization BMP Research for Erosion and Sediment Controls: Cost Survey Technical Memorandum, State of California Department of Transportation (Caltrans), July 2007.

Controlling Erosion of Construction Sites, Agricultural Information #347, U.S. Department of Agriculture (USDA), Natural Resources Conservation Service (NRCS) (formerly Soil Conservation Service – SCS).

Guides for Erosion and Sediment Control in California, USDA Soils Conservation Service, January 1991.

Manual of Standards of Erosion and Sediment Control Measures, Association of Bay Area Governments, May 1995.

Sedimentation and Erosion Control, An Inventory of Current Practices Draft, US EPA, April 1990.

Soil Erosion by Water, Agriculture Information Bulletin #513, U.S. Department of Agriculture, Soil Conservation Service.

Stormwater Quality Handbooks Construction Site Best Management Practices (BMPs) Manual, State of California Department of Transportation (Caltrans), March 2003.

Guidance Document: Soil Stabilization for Temporary Slopes, State of California Department of Transportation (Caltrans), November 1999

Stormwater Management of the Puget Sound Basin, Technical Manual, Publication #91-75, Washington State Department of Ecology, February 1992.

Water Quality Management Plan for the Lake Tahoe Region, Volume II, Handbook of Management Practices, Tahoe Regional Planning Agency, November 1988.

Hydroseeding EC-4

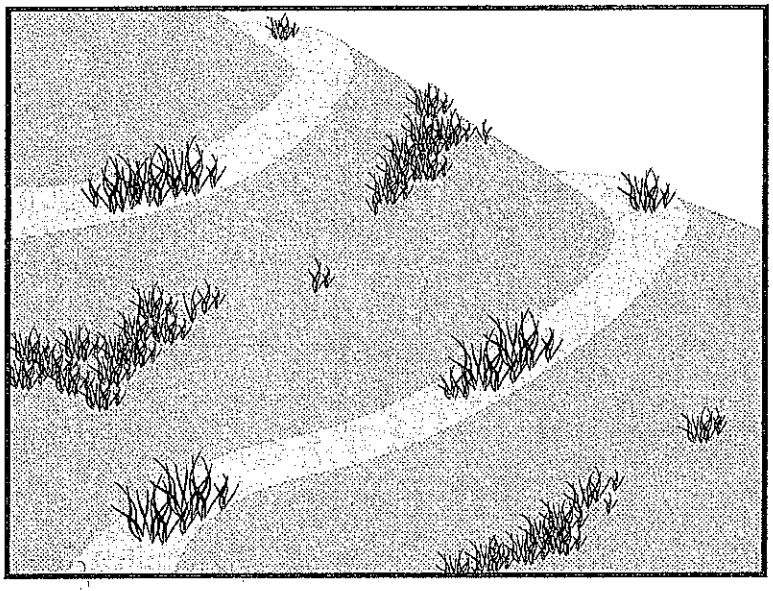

Categories

EC	Erosion Control	☑
SE	Sediment Control	
TC	Tracking Control	
WE	Wind Erosion Control	☒
NS	Non-Stormwater Management Control	
WM	Waste Management and Materials Pollution Control	

Legend:

☑ **Primary Category**

☒ **Secondary Category**

Targeted Constituents

Sediment	☑
Nutrients	
Trash	
Metals	
Bacteria	
Oil and Grease	
Organics	

Potential Alternatives

EC-3 Hydraulic Mulch

EC-5 Soil Binders

EC-6 Straw Mulch

EC-7 Geotextiles and Mats

EC-8 Wood Mulching

EC-14 Compost Blanket

EC-16 Non-Vegetative Stabilization

Description and Purpose

Hydroseeding typically consists of applying a mixture of a hydraulic mulch, seed, fertilizer, and stabilizing emulsion with a hydraulic mulcher, to temporarily protect exposed soils from erosion by water and wind. Hydraulic seeding, or hydroseeding, is simply the method by which temporary or permanent seed is applied to the soil surface.

Suitable Applications

Hydroseeding is suitable for disturbed areas requiring temporary protection until permanent stabilization is established, for disturbed areas that will be re-disturbed following an extended period of inactivity, or to apply permanent stabilization measures. Hydroseeding without mulch or other cover (e.g. EC-7, Erosion Control Blanket) is not a stand-alone erosion control BMP and should be combined with additional measures until vegetation establishment.

Typical applications for hydroseeding include:

- Disturbed soil/graded areas where permanent stabilization or continued earthwork is not anticipated prior to seed germination.
- Cleared and graded areas exposed to seasonal rains or temporary irrigation.
- Areas not subject to heavy wear by construction equipment or high traffic.

Limitations

- Availability of hydroseeding equipment may be limited just prior to the rainy season and prior to storms due to high demand.
- Hydraulic seed should be applied with hydraulic mulch or a stand-alone hydroseed application should be followed by one of the following:
  - Straw mulch (see Straw Mulch EC-6)
  - Rolled erosion control products (see Geotextiles and Mats EC-7)
  - Application of Compost Blanket (see Compost Blanket EC-14)

  Hydraulic seed may be used alone only on small flat surfaces when there is sufficient time in the season to ensure adequate vegetation establishment and coverage to provide adequate erosion control.
- Hydraulic seed without mulch does not provide immediate erosion control.
- Temporary seeding may not be appropriate for steep slopes (i.e., slopes readily prone to rill erosion or without sufficient topsoil).
- Temporary seeding may not be appropriate in dry periods without supplemental irrigation.
- Temporary vegetation may have to be removed before permanent vegetation is applied.
- Temporary vegetation may not be appropriate for short term inactivity (i.e. less than 3-6 months).

Implementation

In order to select appropriate hydraulic seed mixtures, an evaluation of site conditions should be performed with respect to:

- Soil conditions
- Site topography and exposure (sun/wind)
- Season and climate
- Vegetation types
- Maintenance requirements
- Sensitive adjacent areas
- Water availability
- Plans for permanent vegetation

The local office of the U.S.D.A. Natural Resources Conservation Service (NRCS) is an excellent source of information on appropriate seed mixes.

The following steps should be followed for implementation:

- Where appropriate or feasible, soil should be prepared to receive the seed by disking or otherwise scarifying (See EC-15, Soil Preparation) the surface to eliminate crust, improve air and water infiltration and create a more favorable environment for germination and growth.

- Avoid use of hydraulic seed in areas where the BMP would be incompatible with future earthwork activities.
- Hydraulic seed can be applied using a multiple step or one step process.
  - In a multiple step process, hydraulic seed is applied first, followed by mulch or a Rolled Erosion Control Product (RECP).
  - In the one step process, hydraulic seed is applied with hydraulic mulch in a hydraulic matrix. When the one step process is used to apply the mixture of fiber, seed, etc., the seed rate should be increased to compensate for all seeds not having direct contact with the soil.
- All hydraulically seeded areas should have mulch, or alternate erosion control cover to keep seeds in place and to moderate soil moisture and temperature until the seeds germinate and grow.
- All seeds should be in conformance with the California State Seed Law of the Department of Agriculture. Each seed bag should be delivered to the site sealed and clearly marked as to species, purity, percent germination, dealer's guarantee, and dates of test. The container should be labeled to clearly reflect the amount of Pure Live Seed (PLS) contained. All legume seed should be pellet inoculated. Inoculant sources should be species specific and should be applied at a rate of 2 lb of inoculant per 100 lb seed.
- Commercial fertilizer should conform to the requirements of the California Food and Agricultural Code, which can be found at http://www.leginfo.ca.gov/.html/fac_table_of_contents.html. Fertilizer should be pelleted or granular form.
- Follow up applications should be made as needed to cover areas of poor coverage or germination/vegetation establishment and to maintain adequate soil protection.
- Avoid over spray onto roads, sidewalks, drainage channels, existing vegetation, etc.
- Additional guidance on the comparison and selection of temporary slope stabilization methods is provided in Appendix F of the Handbook.

Costs

Average cost for installation and maintenance may vary from as low as $1,900 per acre for flat slopes and stable soils, to $4,000 per acre for moderate to steep slopes and/or erosive soils. Cost of seed mixtures vary based on types of required vegetation.

BMP	Installed Cost per Acre
Hydraulic Seed	$1,900-$4,000

Source: Caltrans Soil Stabilization BMP Research for Erosion and Sediment Controls, July 2007

Inspection and Maintenance

- BMPs must be inspected in accordance with General Permit requirements for the associated project type and risk level. It is recommended that at a minimum, BMPs be inspected weekly, prior to forecasted rain events, daily during extended rain events, and after the conclusion of rain events.
- Areas where erosion is evident should be repaired and BMPs re-applied as soon as possible. Care should be exercised to minimize the damage to protected areas while making repairs, as any area damaged will require re-application of BMPs.
- Where seeds fail to germinate, or they germinate and die, the area must be re-seeded, fertilized, and mulched within the planting season, using not less than half the original application rates.
- Irrigation systems, if applicable, should be inspected daily while in use to identify system malfunctions and line breaks. When line breaks are detected, the system must be shut down immediately and breaks repaired before the system is put back into operation.
- Irrigation systems should be inspected for complete coverage and adjusted as needed to maintain complete coverage.

References

Soil Stabilization BMP Research for Erosion and Sediment Controls: Cost Survey Technical Memorandum, State of California Department of Transportation (Caltrans), July 2007.

Stormwater Quality Handbooks Construction Site Best Management Practices (BMPs) Manual, State of California Department of Transportation (Caltrans), March 2003.

Guidance Document: Soil Stabilization for Temporary Slopes, State of California Department of Transportation (Caltrans), November 1999.

Earth Dikes and Drainage Swales EC-9

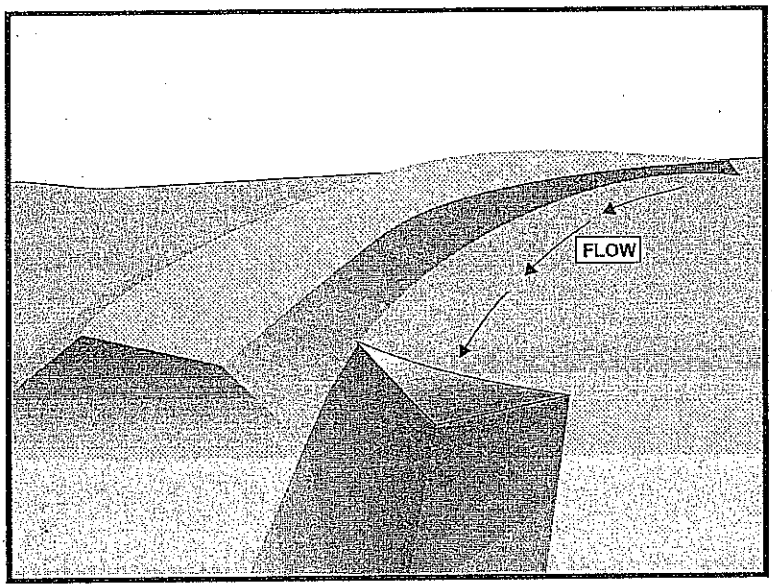

Categories

EC	Erosion Control	☑
SE	Sediment Control	
TC	Tracking Control	
WE	Wind Erosion Control	
NS	Non-Stormwater Management Control	
WM	Waste Management and Materials Pollution Control	

Legend:

☑ **Primary Objective**

☒ **Secondary Objective**

Targeted Constituents

Sediment	☑
Nutrients	
Trash	
Metals	
Bacteria	
Oil and Grease	
Organics	

Potential Alternatives

None

Description and Purpose

An earth dike is a temporary berm or ridge of compacted soil used to divert runoff or channel water to a desired location. A drainage swale is a shaped and sloped depression in the soil surface used to convey runoff to a desired location. Earth dikes and drainage swales are used to divert off site runoff around the construction site, divert runoff from stabilized areas and disturbed areas, and direct runoff into sediment basins or traps.

Suitable Applications

Earth dikes and drainage swales are suitable for use, individually or together, where runoff needs to be diverted from one area and conveyed to another.

- Earth dikes and drainage swales may be used:
  - To convey surface runoff down sloping land
  - To intercept and divert runoff to avoid sheet flow over sloped surfaces
  - To divert and direct runoff towards a stabilized watercourse, drainage pipe or channel
  - To intercept runoff from paved surfaces
  - Below steep grades where runoff begins to concentrate
  - Along roadways and facility improvements subject to flood drainage

- At the top of slopes to divert runon from adjacent or undisturbed slopes
- At bottom and mid slope locations to intercept sheet flow and convey concentrated flows
- Divert sediment laden runoff into sediment basins or traps

Limitations

Dikes should not be used for drainage areas greater than 10 acres or along slopes greater than 10 percent. For larger areas more permanent drainage structures should be built. All drainage structures should be built in compliance with local municipal requirements.

- Earth dikes may create more disturbed area on site and become barriers to construction equipment.
- Earth dikes must be stabilized immediately, which adds cost and maintenance concerns.
- Diverted stormwater may cause downstream flood damage.
- Dikes should not be constructed of soils that may be easily eroded.
- Regrading the site to remove the dike may add additional cost.
- Temporary drains and swales or any other diversion of runoff should not adversely impact upstream or downstream properties.
- Temporary drains and swales must conform to local floodplain management requirements.
- Earth dikes/drainage swales are not suitable as sediment trapping devices.
- It may be necessary to use other soil stabilization and sediment controls such as check dams, plastics, and blankets, to prevent scour and erosion in newly graded dikes, swales, and ditches.
- Sediment accumulation, scour depressions, and/or persistent non-stormwater discharges can result in areas of standing water suitable for mosquito production in drainage swales.

Implementation

The temporary earth dike is a berm or ridge of compacted soil, located in such a manner as to divert stormwater to a sediment trapping device or a stabilized outlet, thereby reducing the potential for erosion and offsite sedimentation. Earth dikes can also be used to divert runoff from off site and from undisturbed areas away from disturbed areas and to divert sheet flows away from unprotected slopes.

An earth dike does not itself control erosion or remove sediment from runoff. A dike prevents erosion by directing runoff to an erosion control device such as a sediment trap or directing runoff away from an erodible area. Temporary diversion dikes should not adversely impact adjacent properties and must conform to local floodplain management regulations, and should not be used in areas with slopes steeper than 10%.

Slopes that are formed during cut and fill operations should be protected from erosion by runoff. A combination of a temporary drainage swale and an earth dike at the top of a slope can divert

runoff to a location where it can be brought to the bottom of the slope (see EC-11, Slope Drains). A combination dike and swale is easily constructed by a single pass of a bulldozer or grader and compacted by a second pass of the tracks or wheels over the ridge. Diversion structures should be installed when the site is initially graded and remain in place until post construction BMPs are installed and the slopes are stabilized.

Diversion practices concentrate surface runoff, increasing its velocity and erosive force. Thus, the flow out of the drain or swale must be directed onto a stabilized area or into a grade stabilization structure. If significant erosion will occur, a swale should be stabilized using vegetation, chemical treatment, rock rip-rap, matting, or other physical means of stabilization. Any drain or swale that conveys sediment laden runoff must be diverted into a sediment basin or trap before it is discharged from the site.

General

- Care must be applied to correctly size and locate earth dikes, drainage swales. Excessively steep, unlined dikes, and swales are subject to erosion and gully formation.
- Conveyances should be stabilized.
- Use a lined ditch for high flow velocities.
- Select flow velocity based on careful evaluation of the risks due to erosion of the measure, soil types, overtopping, flow backups, washout, and drainage flow patterns for each project site.
- Compact any fills to prevent unequal settlement.
- Do not divert runoff onto other property without securing written authorization from the property owner.
- When possible, install and utilize permanent dikes, swales, and ditches early in the construction process.
- Provide stabilized outlets.

Earth Dikes

Temporary earth dikes are a practical, inexpensive BMP used to divert stormwater runoff. Temporary diversion dikes should be installed in the following manner:

- All dikes should be compacted by earth moving equipment.
- All dikes should have positive drainage to an outlet.
- All dikes should have 2:1 or flatter side slopes, 18 in. minimum height, and a minimum top width of 24 in. Wide top widths and flat slopes are usually needed at crossings for construction traffic.
- The outlet from the earth dike must function with a minimum of erosion. Runoff should be conveyed to a sediment trapping device such as a Sediment Trap (SE-3) or Sediment Basin

(SE-2) when either the dike channel or the drainage area above the dike are not adequately stabilized.

- Temporary stabilization may be achieved using seed and mulching for slopes less than 5% and either rip-rap or sod for slopes in excess of 5%. In either case, stabilization of the earth dike should be completed immediately after construction or prior to the first rain.
- If riprap is used to stabilize the channel formed along the toe of the dike, the following typical specifications apply:

Channel Grade	Riprap Stabilization
0.5-1.0%	4 in. Rock
1.1-2.0%	6 in. Rock
2.1-4.0%	8 in. Rock
4.1-5.0%	8 in. -12 in. Riprap

- The stone riprap, recycled concrete, etc. used for stabilization should be pressed into the soil with construction equipment.
- Filter cloth may be used to cover dikes in use for long periods.
- Construction activity on the earth dike should be kept to a minimum.

Drainage Swales

Drainage swales are only effective if they are properly installed. Swales are more effective than dikes because they tend to be more stable. The combination of a swale with a dike on the downhill side is the most cost effective diversion.

Standard engineering design criteria for small open channel and closed conveyance systems should be used (see the local drainage design manual). Unless local drainage design criteria state otherwise, drainage swales should be designed as follows:

- No more than 5 acres may drain to a temporary drainage swale.
- Place drainage swales above or below, not on, a cut or fill slope.
- Swale bottom width should be at least 2 ft
- Depth of the swale should be at least 18 in.
- Side slopes should be 2:1 or flatter.
- Drainage or swales should be laid at a grade of at least 1 percent, but not more than 15 percent.
- The swale must not be overtopped by the peak discharge from a 10-year storm, irrespective of the design criteria stated above.

- Remove all trees, stumps, obstructions, and other objectionable material from the swale when it is built.
- Compact any fill material along the path of the swale.
- Stabilize all swales immediately. Seed and mulch swales at a slope of less than 5 percent, and use rip-rap or sod for swales with a slope between 5 and 15 percent. For temporary swales, geotextiles and mats (EC-7) may provide immediate stabilization.
- Irrigation may be required to establish sufficient vegetation to prevent erosion.
- Do not operate construction vehicles across a swale unless a stabilized crossing is provided.
- Permanent drainage facilities must be designed by a professional engineer (see the local drainage design criteria for proper design).
- At a minimum, the drainage swale should conform to predevelopment drainage patterns and capacities.
- Construct the drainage swale with a positive grade to a stabilized outlet.
- Provide erosion protection or energy dissipation measures if the flow out of the drainage swale can reach an erosive velocity.

Costs

- Cost ranges from $15 to $55 per ft for both earthwork and stabilization and depends on availability of material, site location, and access.
- Small dikes: $2.50 - $6.50/linear ft; Large dikes: $2.50/yd^3.
- The cost of a drainage swale increases with drainage area and slope. Typical swales for controlling internal erosion are inexpensive, as they are quickly formed during routine earthwork.

Inspection and Maintenance

- Inspect BMPs prior to forecast rain, daily during extended rain events, after rain events, weekly during the rainy season, and at two-week intervals during the non-rainy season.
- Inspect BMPs subject to non-stormwater discharges daily while non-stormwater discharges occur.
- Inspect ditches and berms for washouts. Replace lost riprap, damaged linings or soil stabilizers as needed.
- Inspect channel linings, embankments, and beds of ditches and berms for erosion and accumulation of debris and sediment. Remove debris and sediment and repair linings and embankments as needed.
- Temporary conveyances should be completely removed as soon as the surrounding drainage area has been stabilized or at the completion of construction

References

Erosion and Sediment Control Handbook, S.J. Goldman, K. Jackson, T.A. Bursetynsky, P.E., McGraw Hill Book Company, 1986.

Manual of Standards of Erosion and Sediment Control Measures, Association of Bay Area Governments, May 1995.

Metzger, M.E. 2004. Managing mosquitoes in stormwater treatment devices. University of California Division of Agriculture and Natural Resources, Publication 8125. On-line: http://anrcatalog.ucdavis.edu/pdf/8125.pdf

National Association of Home Builders (NAHB). Stormwater Runoff & Nonpoint Source Pollution Control Guide for Builders and Developers. National Association of Home Builders, Washington, D.C., 1995

National Management Measures to Control Nonpoint Source Pollution from Urban Areas, United States Environmental Protection Agency, 2002.

Southeastern Wisconsin Regional Planning Commission (SWRPC). Costs of Urban Nonpoint Source Water Pollution Control Measures. Technical Report No. 31. Southeastern Wisconsin Regional Planning Commission, Waukesha, WI. 1991

Stormwater Quality Handbooks Construction Site Best Management Practices (BMPs) Manual, State of California Department of Transportation (Caltrans), November 2000.

Stormwater Management of the Puget Sound Basin, Technical Manual, Publication #91-75, Washington State Department of Ecology, February 1992.

Water Quality Management Plan for the Lake Tahoe Region, Volume II, Handbook of Management Practices, Tahoe Regional Planning Agency, November 1988.

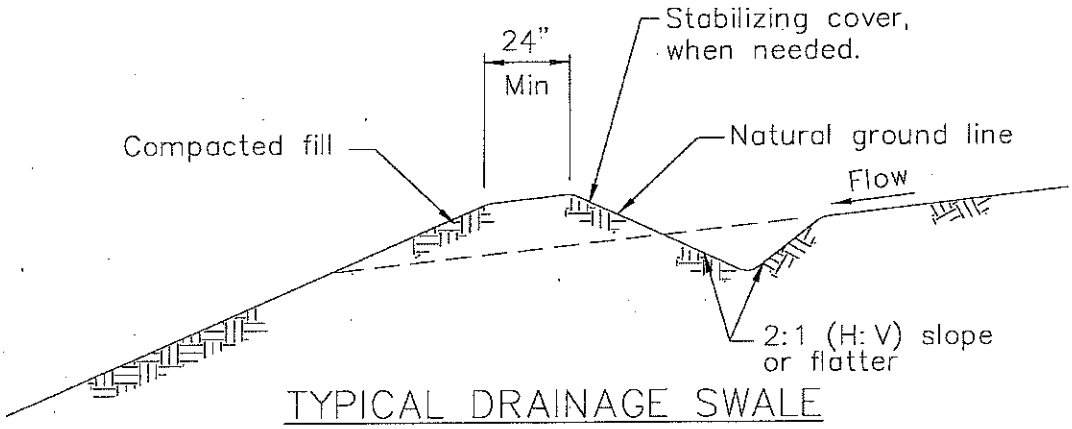

TYPICAL DRAINAGE SWALE
NOT TO SCALE

NOTES:

1. Stabilize inlet, outlets and slopes.
2. Properly compact the subgrade.

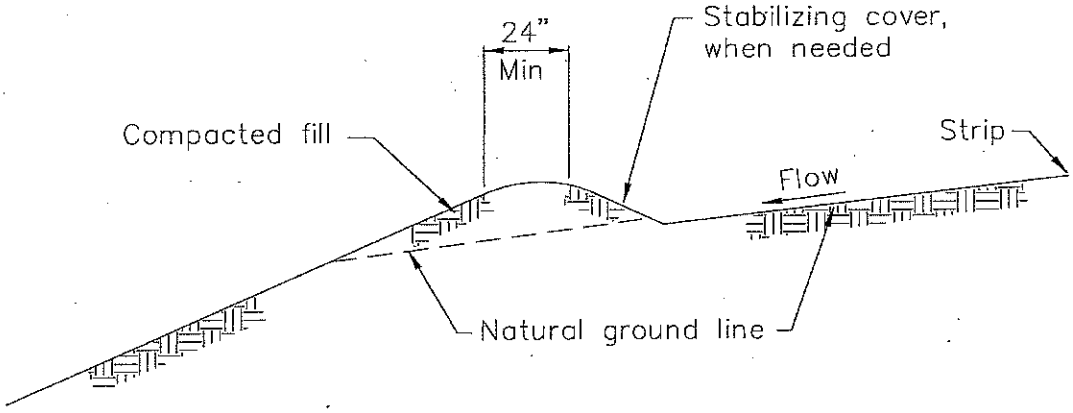

TYPICAL EARTH DIKE
NOT TO SCALE

Soil Preparation/Roughening EC-15

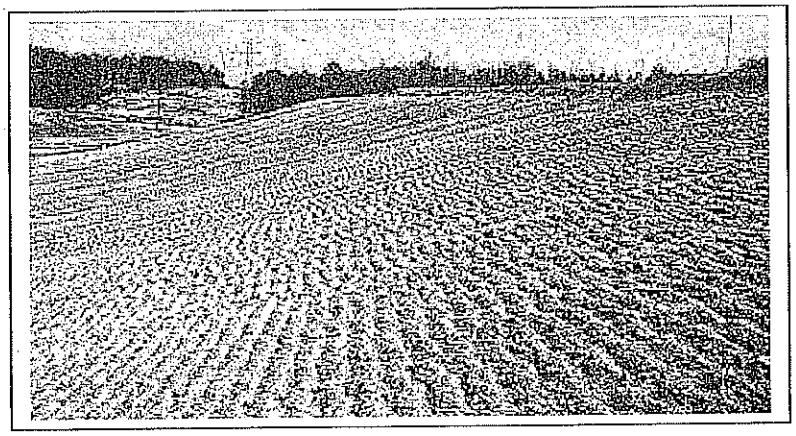

Categories

EC	Erosion Control	☑
SE	Sediment Control	☒
TC	Tracking Control	
WE	Wind Erosion Control	
NS	Non-Stormwater Management Control	
WM	Waste Management and Materials Pollution Control	

Legend:

☑ **Primary Category**

☒ **Secondary Category**

Description and Purpose

Soil Preparation/Roughening involves assessment and preparation of surface soils for BMP installation. This can include soil testing (for seed base, soil characteristics, or nutrients), as well as roughening surface soils by mechanical methods (including sheepsfoot rolling, track walking, scarifying, stair stepping, and imprinting) to prepare soil for additional BMPs, or to break up sheet flow. Soil Preparation can also involve tilling topsoil to prepare a seed bed and/or incorporation of soil amendments, to enhance vegetative establishment.

Targeted Constituents

Sediment	☑
Nutrients	
Trash	
Metals	
Bacteria	
Oil and Grease	
Organics	

Suitable Applications

Soil preparation: Soil preparation is essential to proper vegetative establishment. In particular, soil preparation (i.e. tilling, raking, and amendment) is suitable for use in combination with any soil stabilization method, including RECPs or sod. Soil preparation should not be confused with roughening.

Roughening: Soil roughening is generally referred to as track walking (sometimes called imprinting) a slope, where treads from heavy equipment run parallel to the contours of the slope and act as mini terraces. Soil preparation is most effective when used in combination with erosion controls. Soil Roughening is suitable for use as a complementary process for controlling erosion on a site. Roughening is not intended to be used as a stand-alone BMP, and should be used with perimeter controls, additional erosion control measures, grade breaks, and vegetative establishment for maximum effectiveness. Roughening is intended to only affect surface soils and should not compromise slope stability or overall compaction. Suitable applications for soil roughening include:

Potential Alternatives

EC-3 Hydraulic Mulch

EC-5 Soil Binders

EC-7 Geotextiles and Mats

- Along any disturbed slopes, including temporary stockpiles, sediment basins, or compacted soil diversion berms and swales.
- Roughening should be used in combination with hydraulically applied stabilization methods, compost blanket, or straw mulch; but should not be used in combination with RECPs or sod because roughening is intended to leave terraces on the slope.

Limitations

- Preparation and roughening must take place prior to installing other erosion controls (such as hydraulically applied stabilizers) or sediment controls (such as fiber rolls) on the faces of slopes.
- In such cases where slope preparation is minimal, erosion control/revegetation BMPs that do not require extensive soil preparation - such as hydraulic mulching and seeding applications - should be employed.
- Consideration should be given to the type of erosion control BMP that follows surface preparation, as some BMPs are not designed to be installed over various types of tillage/roughening, i.e., RECPs (erosion control blankets) should not be used with soil roughening due to a "bridging" effect, which suspends the blanket above the seed bed.
- Surface roughness has an effect on the amount of mulch material that needs to be applied, which shows up as a general increase in mulch material due to an increase in surface area (Topographic Index -see EC-3 Hydraulic Mulching).

Implementation

- Additional guidance on the comparison and selection of temporary slope stabilization methods is provided in Appendix F of the Handbook.

General

A roughened surface can significantly reduce erosion. Based on tests done at the San Diego State Erosion Research Laboratory, various roughening techniques on slopes can result in a 12 - 76% reduction in the erosion rate versus smooth slopes.

Materials

Minimal materials are required unless amendments and/or seed are added to the soil. The majority of soil roughening/preparation can be done with equipment that is on hand at a normal construction site, such as bull dozers and compaction equipment.

Installation Guidelines

Soil Preparation

- Where appropriate or feasible, soil should be prepared to receive the seed by disking or otherwise scarifying the surface to eliminate crust, improve air and water infiltration and create a more favorable environment for germination and growth.
- Based upon soil testing conducted, apply additional soil amendments (e.g. fertilizers, additional seed) to the soil to help with germination. Follow EC-4, Hydroseeding, when selecting and applying seed and fertilizers.

Cut Slope Roughening:

- Stair-step grade or groove the cut slopes that are steeper than 3:1.
- Use stair-step grading on any erodible material soft enough to be ripped with a bulldozer. Slopes consisting of soft rock with some subsoil are particularly suited to stair-step grading.
- Make the vertical cut distance less than the horizontal distance, and slightly slope the horizontal position of the "step" in toward the vertical wall.
- Do not make individual vertical cuts more than 2 feet (0.6 m) high in soft materials or more than 3 feet (0.9 m) high in rocky materials.
- Groove the slope using machinery to create a series of ridges and depressions that run across the slope, on the contour.

Fill Slope Roughening:

- Place on fill slopes with a gradient steeper than 3:1 in lifts not to exceed 8 inches (0.2 m), and make sure each lift is properly compacted.
- Ensure that the face of the slope consists of loose, uncompacted fill 4-6 inches (0.1-0.2 m) deep.
- Use grooving or tracking to roughen the face of the slopes, if necessary.
- Do not blade or scrape the final slope face.

Roughening for Slopes to be Mowed:

- Slopes which require mowing activities should not be steeper than 3:1.
- Roughen these areas to shallow grooves by track walking, scarifying, sheepsfoot rolling, or imprinting.
- Make grooves close together (less than 10 inches), and not less than 1 inch deep, and perpendicular to the direction of runoff (i.e., parallel to the slope contours).
- Excessive roughness is undesirable where mowing is planned.

Roughening With Tracked Machinery:

- Limit roughening with tracked machinery to soils with a sandy textural component to avoid undue compaction of the soil surface.
- Operate tracked machinery up and down the slope to leave horizontal depressions in the soil. Do not back-blade during the final grading operation.
- Seed and mulch roughened areas as soon as possible to obtain optimum seed germination and growth.

Costs

Costs are based on the additional labor of tracking or preparation of the slope plus the cost of any required soil amendment materials.

Inspection and Maintenance

- BMPs must be inspected in accordance with General Permit requirements for the associated project type and risk level. It is recommended that at a minimum, BMPs be inspected weekly, prior to forecasted rain events, daily during extended rain events, and after the conclusion of rain events.
- Check the seeded slopes for signs of erosion such as rills and gullies. Fill these areas slightly above the original grade, then reseed and mulch as soon as possible.
- Inspect BMPs weekly during normal operations, prior to forecasted rain events, daily during extended rain events, and after the conclusion of rain events.

References

Soil Stabilization BMP Research for Erosion and Sediment Controls: Cost Survey Technical Memorandum, State of California Department of Transportation (Caltrans), July 2007.

Erosion and Sediment Control Manual, Oregon Department of Environmental Quality, February 2005.

Non-Vegetative Stabilization EC-16

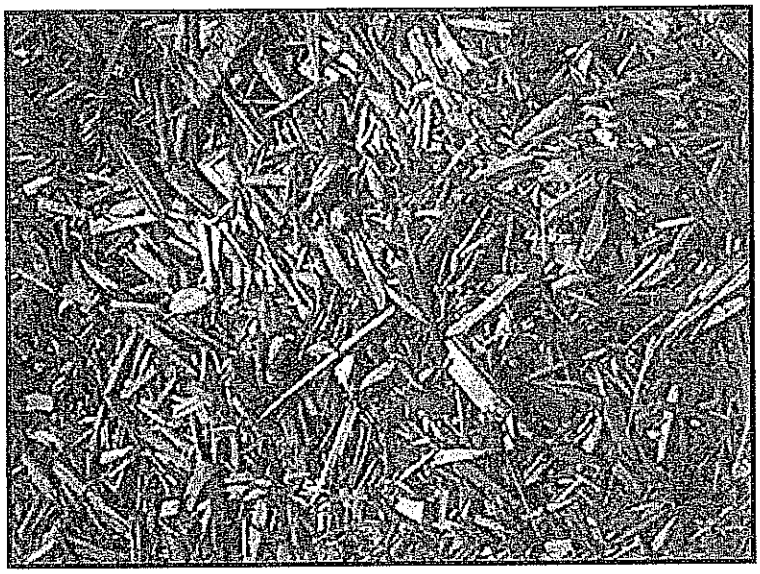

Categories		
EC	Erosion Control	☑
SE	Sediment Control	☒
TR	Tracking Control	
WE	Wind Erosion Control	☒
NS	Non-Stormwater Management Control	
WM	Waste Management and Materials Pollution Control	

Legend:

☑ **Primary Category**

☒ **Secondary Category**

Targeted Constituents	
Sediment	☑
Nutrients	
Trash	
Metals	
Bacteria	
Oil and Grease	
Organics	

Potential Alternatives

None

Description and Purpose

Non-vegetative stabilization methods are used for temporary or permanent stabilization of areas prone to erosion and should be used only where vegetative options are not feasible; examples include:

- Areas of vehicular or pedestrian traffic such as roads or paths;
- Arid environments where vegetation would not provide timely ground coverage, or would require excessive irrigation;
- Rocky substrate, infertile or droughty soils where vegetation would be difficult to establish; and
- Areas where vegetation will not grow adequately within the construction time frame.

There are several non-vegetative stabilization methods and selection should be based on site-specific conditions.

Decomposed Granite (DG) is a permanent erosion protection method that consists of a layer of stabilized decomposed granite placed over an erodible surface.

Degradable Mulches of various types (see EC-3, EC-6, EC-8) can be used for temporary non-vegetative stabilization; examples include straw mulch, compost, wood chips or hydraulic mulch.

Geotextiles and Mats can be used for temporary non-vegetative stabilization (see EC-7). These BMPs are typically manufactured

from degradable or synthetic materials and are designed and specified based on their functional longevity, i.e., how long they will persist and provide erosion protection. All geotextiles and mats should be replaced when they exceed their functional longevity or when permanent stabilization methods are instituted.

Gravel Mulch is a non-degradable erosion control product that is composed of washed and screened coarse to very coarse gravel, 16 mm to 64 mm (0.6" - 2.5"), similar to an AASHTO No. 3 coarse aggregate.

Rock Slope Protection consists of utilizing large rock or rip-rap (4"- 24") to stabilize slopes with a high erosion potential and those subject to scour along waterways.

Soil Binders can be used for temporary non-vegetative stabilization (see EC-5). The key to their use is functional longevity. In most cases, the soil binder will need to be routinely monitored and re-applied to maintain an erosion-resistant coverage.

Suitable Applications

Non-vegetated stabilization methods are suitable for use on disturbed soil areas and on material stockpiles that need to be temporarily or permanently protected from erosion by water and wind. Non-vegetated stabilization should only be utilized when vegetation cannot be established in the required timeframe, due to soil or climactic conditions, or where vegetation may be a potential fire hazard.

Decomposed Granite (DG) and Gravel Mulch are suitable for use in areas where vegetation establishment is difficult, on flat surfaces, trails and pathways, and when used in conjunction with a stabilizer or tackifier, on shallow slopes (i.e., 10:1 [H:V]). DG and gravel can also be used on shallow rocky slopes where vegetation cannot be established for permanent erosion control.

Degradable Mulches can be used to cover and protect soil surfaces from erosion both in temporary and permanent applications. In many cases, the use of mulches by themselves requires routine inspection and re-application. See EC-3 Hydraulic Mulch, EC-6 Straw Mulch, EC-8 Wood Mulch, or EC-14 Compost Blankets for more information.

Geotextiles and Mats can be used as a temporary stand-alone soil stabilization method. Depending on material selection, geotextiles and mats can be a short-term (3 mos – 1 year) or long-term (1-2 years) temporary stabilization method. For more information on geotextiles and mats see EC-7 Geotextiles and Mats.

Rock Slope Protection can be used when the slopes are subject to scour or have a high erosion potential, such as slopes adjacent to flowing waterways or slopes subject to overflow from detention facilities (spillways).

Soil Binders can be used for temporary stabilization of stockpiles and disturbed areas not subject to heavy traffic. See EC-5 Soil Binders for more information.

Limitations

General

- Refer to EC-3, EC-6, EC-8, and EC-14 for limitations on use of mulches. Refer to EC-7 for limitations on use of geotextiles and mats. Refer to EC-5 for limitations on use of Soil Binders.

Decomposed Granite

- Not available in some geographic regions.
- If not tackified, material may be susceptible to erosion even on slight slopes (e.g., 30:1 [H:V]).
- Installed costs may be more expensive than vegetative stabilization methods.

Gravel Mulch

- Availability is limited in some geographic regions.
- If not properly screened and washed, can contain fine material that can erode and/or create dust problems.
- If inadequately sized, material may be susceptible to erosion on sloped areas.
- Pore spaces fill with dirt and debris over time; may provide a growing medium for weeds.

Rock Slope Protection

- Installation is labor intensive.
- Installed costs can be significantly higher than vegetative stabilization methods.
- Rounded stones may not be used on slopes greater than 2:1 [H:V].

Implementation

General

Non-vegetated stabilization should be used in accordance with the following general guidance:

- Should be used in conjunction with other BMPs, including drainage, erosion controls and sediment controls.
- Refer to EC-3, EC-6, EC-8, and EC-14 for implementation details for mulches. Refer to EC-7 for implementation details for geotextiles and mats. Refer to EC-5 for implementation details for soil binders.
- Non-vegetated stabilization measures should be implemented as soon as the disturbance in the areas they are intended to protect has ceased.
- Additional guidance on the comparison and selection of temporary slope stabilization methods is provided in Appendix F of the Handbook.

Decomposed Granite Stabilization

- If used for a road or path should be installed on a prepared base.

- Should be mixed with a stabilizer if used for roads or pathways, or on slope applications.
- Though porous it is recommended to prevent standing water on or next to a decomposed granite road or pathway.

Gravel Mulch

- Should be sized based on slope, rainfall, and upgradient run-on conditions. Stone size should be increased as potential for erosion increases (steeper slopes, high intensity rainfall).
- If permanent, a weed control fabric should be placed prior to installation.
- Should be installed at a minimum 2" depth.
- Should completely cover all exposed surfaces.

Rock Slope Protection

- Rock slope protection installation should follow Caltrans Standard Specification 72-2: Rock Slope Protection. Refer to the specification for rock conformity requirements and installation methods.
- When using rock slope protection, rock size and installation method should be specified by an Engineer.
- A geotextile fabric should be placed prior to installation.

Costs

- Costs are highly variable depending not only on technique chosen, but also on materials chosen within specific techniques. In addition, availability of certain materials will vary by region/location, which will also affect the cost. Costs of mulches, geotextiles and mats, and soil binders are presented in their respective fact sheets. Costs for decomposed granite, gravel mulch stabilization and rock slope protection may be higher depending on location and availability of materials. Caltrans has provided an estimate for gravel mulch of \$10 - \$15/yd^2 in flat areas and \$11 - \$23/yd^2 on side slopes.

Inspection and Maintenance

General

- BMPs must be inspected in accordance with General Permit requirements for the associated project type and risk level. It is recommended that at a minimum, BMPs be inspected weekly, prior to forecasted rain events, daily during extended rain events, and after the conclusion of rain events.
- For permanent installation, require inspection periodically and after major storm events to look for signs of erosion or damage to the stabilization.
- All damage should be repaired immediately.
- Refer to EC-3, EC-6, EC-8, and EC-14 for inspection and maintenance requirements for mulches. Refer to EC-7 for inspection and maintenance requirements for geotextiles and mats. Refer to EC-5 for inspection and maintenance requirements for soil binders.

Decomposed Granite and Gravel Mulch Stabilization

- Rake out and add decomposed granite or gravel as needed to areas subject to rill erosion. Inspect upgradient drainage controls and repair/modify as necessary.
- Should remain stable under loose surface material. Any significant problem areas should be repaired to restore uniformity to the installation.

References

Arid Zone Forestry: A Guide for Field Technicians. Food and Agriculture Organization of the United Nations, 1989.

Design of Roadside Channels with Flexible Linings, Hydraulic Engineering Circular Number 15, Third Edition, Federal Highway Administration, 2007.

Design Standards for Urban Infrastructure - Soft Landscape Design, Department of Territory and Municipal Services - Australian Capital Territory http://www.tams.act.gov.au/work/standards_and_procedures/design_standards_for_urban_infrastructure

Erosion and Sediment Control Handbook: A Guide for Protection of State Waters through the use of Best Management Practices during Land Disturbing Activities, Tennessee Department of Environment and Conservation, 2002.

Gravel Mulch, Landscape Architecture Non-Standard Specification 10-2, California Department of Transportation (Caltrans), http://www.dot.ca.gov/hq/LandArch/roadside/detail-gm.htm

Maine Erosion and Sediment Control BMPs, DEPLW0588, Maine Department of Environmental Protection: Bureau of Land and Water Quality, 2003.

National Menu of Best Management Practices, US Environmental Protection Agency, 2006.

Standard Specification 72-2: Rock Slope Protection. California Department of Transportation, 2006.

Stormwater Quality Handbooks Construction Site Best Management Practices (BMPs) Manual, State of California Department of Transportation (Caltrans), March 2003.

Silt Fence

SE-1

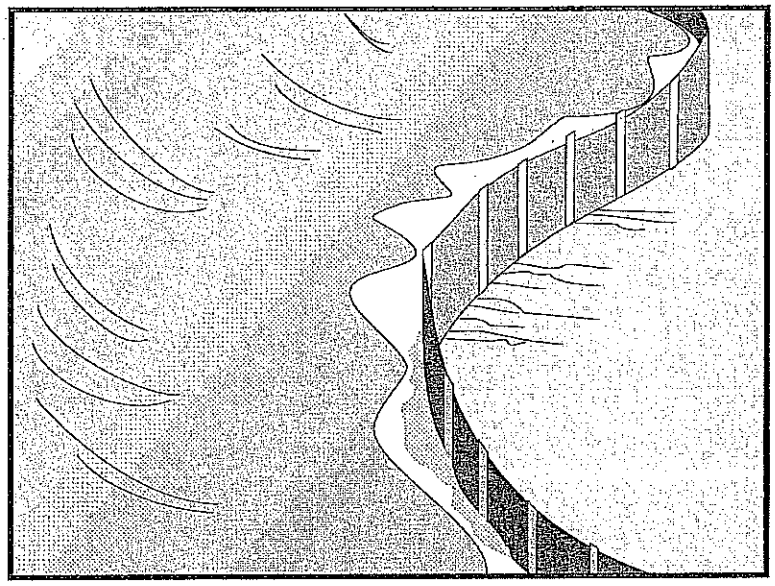

Categories		
EC	Erosion Control	
SE	Sediment Control	☑
TC	Tracking Control	
WE	Wind Erosion Control	
NS	Non-Stormwater Management Control	
WM	Waste Management and Materials Pollution Control	

Legend:

☑ **Primary Category**

☒ **Secondary Category**

Targeted Constituents	
Sediment	☑
Nutrients	
Trash	
Metals	
Bacteria	
Oil and Grease	
Organics	

Potential Alternatives

SE-5 Fiber Rolls

SE-6 Gravel Bag Berm

SE-8 Sandbag Barrier

SE-10 Storm Drain Inlet Protection

SE-14 Biofilter Bags

Description and Purpose

A silt fence is made of a woven geotextile that has been entrenched, attached to supporting poles, and sometimes backed by a plastic or wire mesh for support. The silt fence detains sediment-laden water, promoting sedimentation behind the fence.

Suitable Applications

Silt fences are suitable for perimeter control, placed below areas where sheet flows discharge from the site. They could also be used as interior controls below disturbed areas where runoff may occur in the form of sheet and rill erosion and around inlets within disturbed areas (SE-10). Silt fences are generally ineffective in locations where the flow is concentrated and are only applicable for sheet or overland flows. Silt fences are most effective when used in combination with erosion controls. Suitable applications include:

- Along the perimeter of a project.
- Below the toe or down slope of exposed and erodible slopes.
- Along streams and channels.
- Around temporary spoil areas and stockpiles.
- Around inlets.
- Below other small cleared areas.

Limitations

- Do not use in streams, channels, drain inlets, or anywhere flow is concentrated.
- Do not use in locations where ponded water may cause a flooding hazard. Runoff typically ponds temporarily on the upstream side of silt fence.
- Do not use silt fence to divert water flows or place across any contour line. Fences not constructed on a level contour, or fences used to divert flow will concentrate flows resulting in additional erosion and possibly overtopping or failure of the silt fence.
- Improperly installed fences are subject to failure from undercutting, overtopping, or collapsing.
- Not effective unless trenched and keyed in.
- Not intended for use as mid-slope protection on slopes greater than 4:1 (H:V).
- Do not use on slopes subject to creeping, slumping, or landslides.

Implementation

General

A silt fence is a temporary sediment barrier consisting of woven geotextile stretched across and attached to supporting posts, trenched-in, and, depending upon the strength of fabric used, supported with plastic or wire mesh fence. Silt fences trap sediment by intercepting and detaining small amounts of sediment-laden runoff from disturbed areas in order to promote sedimentation behind the fence.

The following layout and installation guidance can improve performance and should be followed:

- Use principally in areas where sheet flow occurs.
- Install along a level contour, so water does not pond more than 1.5 ft at any point along the silt fence.
- The maximum length of slope draining to any point along the silt fence should be 200 ft or less.
- The maximum slope perpendicular to the fence line should be 1:1.
- Provide sufficient room for runoff to pond behind the fence and to allow sediment removal equipment to pass between the silt fence and toes of slopes or other obstructions. About 1200 ft^2 of ponding area should be provided for every acre draining to the fence.
- Turn the ends of the filter fence uphill to prevent stormwater from flowing around the fence.
- Leave an undisturbed or stabilized area immediately down slope from the fence where feasible.

- Silt fences should remain in place until the disturbed area is permanently stabilized, after which, the silt fence should be removed and properly disposed.
- Silt fence should be used in combination with erosion source controls up slope in order to provide the most effective sediment control.
- Be aware of local regulations regarding the type and installation requirements of silt fence, which may differ from those presented in this fact sheet.

Design and Layout

The fence should be supported by a plastic or wire mesh if the fabric selected does not have sufficient strength and bursting strength characteristics for the planned application (as recommended by the fabric manufacturer). Woven geotextile material should contain ultraviolet inhibitors and stabilizers to provide a minimum of six months of expected usable construction life at a temperature range of 0 °F to 120 °F.

- Layout in accordance with attached figures.
- For slopes steeper than 2:1 (H:V) and that contain a high number of rocks or large dirt clods that tend to dislodge, it may be necessary to install additional protection immediately adjacent to the bottom of the slope, prior to installing silt fence. Additional protection may be a chain link fence or a cable fence.
- For slopes adjacent to sensitive receiving waters or Environmentally Sensitive Areas (ESAs), silt fence should be used in conjunction with erosion control BMPs.

Standard vs. Heavy Duty Silt Fence

Standard Silt Fence

- Generally applicable in cases where the slope of area draining to the silt fence is 4:1 (H:V) or less.
- Used for shorter durations, typically 5 months or less
- Area draining to fence produces moderate sediment loads.

Heavy Duty Silt Fence

- Use is generally limited to 8 months or less.
- Area draining to fence produces moderate sediment loads.
- Heavy duty silt fence usually has 1 or more of the following characteristics, not possessed by standard silt fence.
  - Fence fabric has higher tensile strength.
  - Fabric is reinforced with wire backing or additional support.
  - Posts are spaced closer than pre-manufactured, standard silt fence products.
  - Posts are metal (steel or aluminum)

Materials

Standard Silt Fence

- Silt fence material should be woven geotextile with a minimum width of 36 in. and a minimum tensile strength of 100 lb force. The fabric should conform to the requirements in ASTM designation D4632 and should have an integral reinforcement layer. The

reinforcement layer should be a polypropylene, or equivalent, net provided by the manufacturer. The permittivity of the fabric should be between 0.1 sec^{-1} and 0.15 sec^{-1} in conformance with the requirements in ASTM designation D4491.

- Wood stakes should be commercial quality lumber of the size and shape shown on the plans. Each stake should be free from decay, splits or cracks longer than the thickness of the stake or other defects that would weaken the stakes and cause the stakes to be structurally unsuitable.

- Staples used to fasten the fence fabric to the stakes should be not less than 1.75 in. long and should be fabricated from 15 gauge or heavier wire. The wire used to fasten the tops of the stakes together when joining two sections of fence should be 9 gauge or heavier wire. Galvanizing of the fastening wire will not be required.

Heavy-Duty Silt Fence

- Some silt fence has a wire backing to provide additional support, and there are products that may use prefabricated plastic holders for the silt fence and use metal posts or bar reinforcement instead of wood stakes. If bar reinforcement is used in lieu of wood stakes, use number four or greater bar. Provide end protection for any exposed bar reinforcement for health and safety purposes.

Installation Guidelines – Traditional Method

Silt fences are to be constructed on a level contour. Sufficient area should exist behind the fence for ponding to occur without flooding or overtopping the fence.

- A trench should be excavated approximately 6 in. wide and 6 in. deep along the line of the proposed silt fence (trenches should not be excavated wider or deeper than necessary for proper silt fence installation).

- Bottom of the silt fence should be keyed-in a minimum of 12 in.

- Posts should be spaced a maximum of 6 ft apart and driven securely into the ground a minimum of 18 in. or 12 in. below the bottom of the trench.

- When standard strength geotextile is used, a plastic or wire mesh support fence should be fastened securely to the upslope side of posts using heavy–duty wire staples at least 1 in. long. The mesh should extend into the trench.

- When extra-strength geotextile and closer post spacing are used, the mesh support fence may be eliminated.

- Woven geotextile should be purchased in a long roll, then cut to the length of the barrier. When joints are necessary, geotextile should be spliced together only at a support post, with a minimum 6 in. overlap and both ends securely fastened to the post.

- The trench should be backfilled with native material and compacted.

- Construct silt fences with a setback of at least 3 ft from the toe of a slope. Where, due to specific site conditions, a 3 ft setback is not available, the silt fence may be constructed at the

toe of the slope, but should be constructed as far from the toe of the slope as practicable. Silt fences close to the toe of the slope will be less effective and more difficult to maintain.

- Construct the length of each reach so that the change in base elevation along the reach does not exceed 1/3 the height of the barrier; in no case should the reach exceed 500 ft.
- Cross barriers should be a minimum of $^1/_3$ and a maximum of ½ the height of the linear barrier.
- See typical installation details at the end of this fact sheet.

Installation Guidelines - Static Slicing Method

- Static Slicing is defined as insertion of a narrow blade pulled behind a tractor, similar to a plow blade, at least 10 inches into the soil while at the same time pulling silt geotextile fabric into the ground through the opening created by the blade to the depth of the blade. Once the gerotextile is installed, the soil is compacted using tractor tires.
- This method will not work with pre-fabricated, wire backed silt fence.
- Benefits:
    - Ease of installation (most often done with a 2 person crew). In addition, installation using static slicing has been found to be more efficient on slopes, in rocky soils, and in saturated soils.
    - Minimal soil disturbance.
    - Greater level of compaction along fence, leading to higher performance (i.e. greater sediment retention).
    - Uniform installation.
    - Less susceptible to undercutting/undermining.

Costs

- It should be noted that costs vary greatly across regions due to available supplies and labor costs.
- Average annual cost for installation using the traditional silt fence installation method (assumes 6 month useful life) is $7 per linear foot based on vendor research. Range of cost is $3.50 - $9.10 per linear foot.
- In tests, the slicing method required 0.33 man hours per 100 linear feet, while the trenched based systems required as much as 1.01 man hours per linear foot.

Inspection and Maintenance

- BMPs must be inspected in accordance with General Permit requirements for the associated project type and risk level. It is recommended that at a minimum, BMPs be inspected weekly, prior to forecasted rain events, daily during extended rain events, and after the conclusion of rain events.
- Repair undercut silt fences.

- Repair or replace split, torn, slumping, or weathered fabric. The lifespan of silt fence fabric is generally 5 to 8 months.
- Silt fences that are damaged and become unsuitable for the intended purpose should be removed from the site of work, disposed, and replaced with new silt fence barriers.
- Sediment that accumulates in the BMP should be periodically removed in order to maintain BMP effectiveness. Sediment should be removed when the sediment accumulation reaches one-third of the barrier height.
- Silt fences should be left in place until the upstream area is permanently stabilized. Until then, the silt fence should be inspected and maintained regularly.
- Remove silt fence when upgradient areas are stabilized. Fill and compact post holes and anchor trench, remove sediment accumulation, grade fence alignment to blend with adjacent ground, and stabilize disturbed area.

References

Manual of Standards of Erosion and Sediment Control Measures, Association of Bay Area Governments, May 1995.

National Management Measures to Control Nonpoint Source Pollution from Urban Areas, United States Environmental Protection Agency, 2002.

Proposed Guidance Specifying Management Measures for Sources of Nonpoint Pollution in Coastal Waters, Work Group-Working Paper, USEPA, April 1992.

Sedimentation and Erosion Control Practices, and Inventory of Current Practices (Draft), UESPA, 1990.

Southeastern Wisconsin Regional Planning Commission (SWRPC). Costs of Urban Nonpoint Source Water Pollution Control Measures. Technical Report No. 31. Southeastern Wisconsin Regional Planning Commission, Waukesha, WI. 1991

Stormwater Quality Handbooks - Construction Site Best Management Practices (BMPs) Manual, State of California Department of Transportation (Caltrans), March 2003.

Stormwater Management Manual for The Puget Sound Basin, Washington State Department of Ecology, Public Review Draft, 1991.

U.S. Environmental Protection Agency (USEPA). Stormwater Management for Industrial Activities: Developing Pollution Prevention Plans and Best Management Practices. U.S. Environmental Protection Agency, Office of Water, Washington, DC, 1992.

Water Quality Management Plan for the Lake Tahoe Region, Volume II, Handbook of Management Practices, Tahoe Regional Planning Agency, November 1988.Soil Stabilization BMP Research for Erosion and Sediment Controls: Cost Survey Technical Memorandum, State of California Department of Transportation (Caltrans), July 2007.

Erosion and Sediment Control Manual, Oregon Department of Environmental Quality, February 2005.

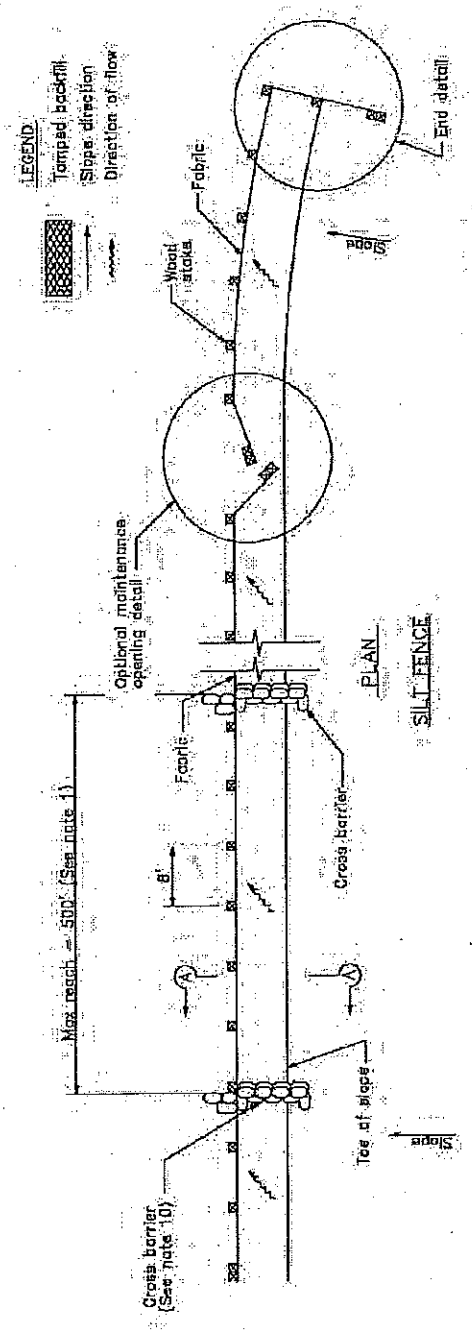

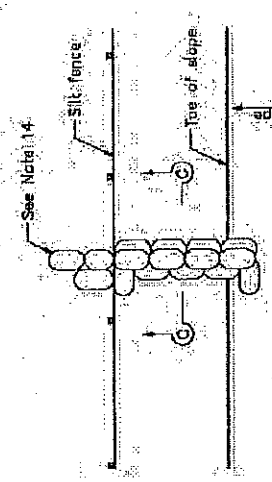

CROSS BARRIER DETAIL

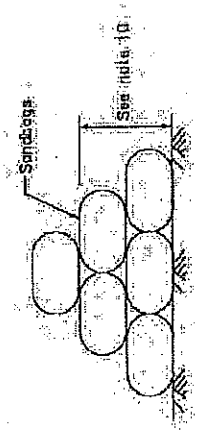

SECTION C–C

NOTES:

1. Construct the length of each reach so that the change in base elevation along the reach does not exceed 1/3 the height of the linear barrier, in no case shall the reach length exceed 500'.
2. The last 8'–0" of fence shall be turned up slope.
3. Stake dimensions are nominal.
4. Dimension may vary to fit field condition.
5. Stakes shall be spaced at 8'–0" maximum and shall be positioned on downstream side of fence.
6. Stakes to overlap and fence fabric to fold around each stake one full turn. Secure fabric to stake with 4 staples.
7. Stakes shall be driven tightly together to prevent potential flow-through of sediment at joint. The tops of the stakes shall be secured with wire.
8. For end stake, fence fabric shall be folded around two stakes one full turn and secured with 4 staples.
9. Minimum 4 staples per stake. Dimensions shown are typical.
10. Cross barriers shall be a minimum of 1/3 and a maximum of 1/2 the height of the linear barrier.
11. Maintenance openings shall be constructed in a manner to ensure sediment remains behind silt fence.
12. Joining sections shall not be placed at sump locations.
13. Sandbag rows and layers shall be offset to eliminate gaps.
14. Add 3–4 bags to cross barrier on downgradient side of silt fence as needed to prevent bypass or undermining and as allowable based on site limits of disturbance.

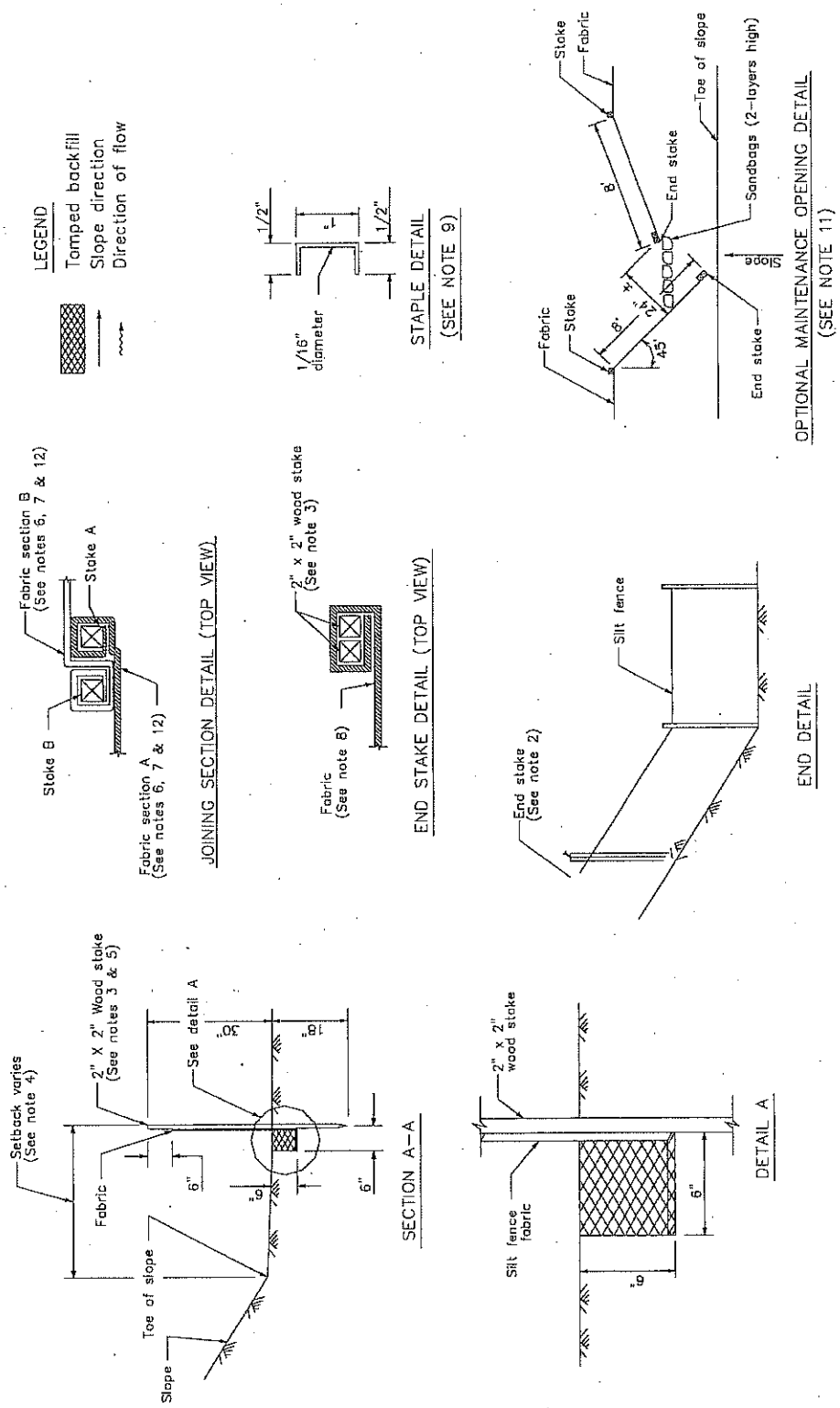
LEGEND
Tamped backfill
Slope direction
Direction of flow
1/2"
1/16" diameter
1/2"
STAPLE DETAIL
(SEE NOTE 9)
Stake
Fabric
Toe of slope
Sandbags (2-layers high)
End stake
Slope
Fabric
Stake
End stake
OPTIONAL MAINTENANCE OPENING DETAIL
(SEE NOTE 11)
Fabric section B
(See notes 6, 7 & 12)
Stake A
Stake B
Fabric section A
(See notes 6, 7 & 12)
JOINING SECTION DETAIL (TOP VIEW)
2" x 2" wood stake
(See note 3)
Fabric
(See note 8)
END STAKE DETAIL (TOP VIEW)
Silt fence
End stake
(See note 2)
END DETAIL
Setback varies
(See note 4)
2" X 2" Wood stake
(See notes 3 & 5)
See detail A
30"
18"
Fabric
6"
6"
6"
Toe of slope
Slope
SECTION A-A
2" x 2"
wood stake
Silt fence
fabric
6"
6"
DETAIL A

Check Dams

SE-4

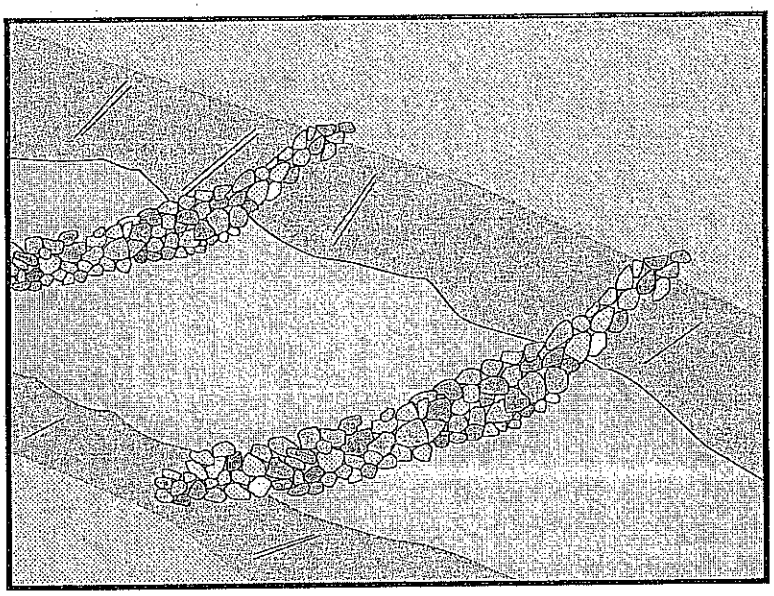

Categories

EC	Erosion Control	☒
SE	Sediment Control	☑
TC	Tracking Control	
WE	Wind Erosion Control	
NS	Non-Stormwater Management Control	
WM	Waste Management and Materials Pollution Control	

Legend:

☑ **Primary Category**

☒ **Secondary Category**

Targeted Constituents

Sediment	☑
Nutrients	
Trash	
Metals	
Bacteria	
Oil and Grease	
Organics	

Potential Alternatives

SE-5 Fiber Rolls

SE-6 Gravel Bag Berm

SE-8 Sandbag Barrier

SE-14 Biofilter Bags

Description and Purpose

A check dam is a small barrier constructed of rock, gravel bags, sandbags, fiber rolls, or other proprietary products, placed across a constructed swale or drainage ditch. Check dams reduce the effective slope of the channel, thereby reducing scour and channel erosion by reducing flow velocity and increasing residence time within the channel, allowing sediment to settle.

Suitable Applications

Check dams may be appropriate in the following situations:

- To promote sedimentation behind the dam.
- To prevent erosion by reducing the velocity of channel flow in small intermittent channels and temporary swales.
- In small open channels that drain 10 acres or less.
- In steep channels where stormwater runoff velocities exceed 5 ft/s.
- During the establishment of grass linings in drainage ditches or channels.
- In temporary ditches where the short length of service does not warrant establishment of erosion-resistant linings.
- To act as a grade control structure.

Limitations

- Not to be used in live streams or in channels with extended base flows.
- Not appropriate in channels that drain areas greater than 10 acres.
- Not appropriate in channels that are already grass-lined unless erosion potential or sediment-laden flow is expected, as installation may damage vegetation.
- Require extensive maintenance following high velocity flows.
- Promotes sediment trapping which can be re-suspended during subsequent storms or removal of the check dam.
- Do not construct check dams with straw bales or silt fence.
- Water suitable for mosquito production may stand behind check dams, particularly if subjected to daily non-stormwater discharges.

Implementation

General

Check dams reduce the effective slope and create small pools in swales and ditches that drain 10 acres or less. Using check dams to reduce channel slope reduces the velocity of stormwater flows, thus reducing erosion of the swale or ditch and promoting sedimentation. Thus, check dams are dual-purpose and serve an important role as erosion controls as well as as sediment controls. Note that use of 1-2 isolated check dams for sedimentation will likely result in little net removal of sediment because of the small detention time and probable scour during longer storms. Using a series of check dams will generally increase their effectiveness. A sediment trap (SE-3) may be placed immediately upstream of the check dam to increase sediment removal efficiency.

Design and Layout

Check dams work by decreasing the effective slope in ditches and swales. An important consequence of the reduced slope is a reduction in capacity of the ditch or swale. This reduction in capacity should be considered when using this BMP, as reduced capacity can result in overtopping of the ditch or swale and resultant consequences. In some cases, such as a "permanent" ditch or swale being constructed early and used as a "temporary" conveyance for construction flows, the ditch or swale may have sufficient capacity such that the temporary reduction in capacity due to check dams is acceptable. When check dams reduce capacities beyond acceptable limits, either:

- Don't use check dams. Consider alternative BMPs, or.
- Increase the size of the ditch or swale to restore capacity.

Maximum slope and velocity reduction is achieved when the toe of the upstream dam is at the same elevation as the top of the downstream dam (see "Spacing Between Check Dams" detail at the end of this fact sheet). The center section of the dam should be lower than the edge sections (at least 6 inches), acting as a spillway, so that the check dam will direct flows to the center of

the ditch or swale (see "Typical Rock Check Dam" detail at the end of this fact sheet). Bypass or side-cutting can occur if a sufficient spillway is not provided in the center of the dam.

Check dams are usually constructed of rock, gravel bags, sandbags, and fiber rolls. A number of products can also be used as check dams (e.g. HDPE check dams, temporary silt dikes (SE-12)), and some of these products can be removed and reused. Check dams can also be constructed of logs or lumber, and have the advantage of a longer lifespan when compared to gravel bags, sandbags, and fiber rolls. Check dams should not be constructed from straw bales or silt fences, since concentrated flows quickly wash out these materials.

Rock check dams are usually constructed of 8 to 12 in. rock. The rock is placed either by hand or mechanically, but never just dumped into the channel. The dam should completely span the ditch or swale to prevent washout. The rock used should be large enough to stay in place given the expected design flow through the channel. It is recommended that abutments be extended 18 in. into the channel bank. Rock can be graded such that smaller diameter rock (e.g. 2-4 in) is located on the upstream side of larger rock (holding the smaller rock in place); increasing residence time.

Log check dams are usually constructed of 4 to 6 in. diameter logs, installed vertically. The logs should be embedded into the soil at least 18 in. Logs can be bolted or wired to vertical support logs that have been driven or buried into the soil.

See fiber rolls, SE-5, for installation of fiber roll check dams.

Gravel bag and sand bag check dams are constructed by stacking bags across the ditch or swale, shaped as shown in the drawings at the end of this fact sheet (see "Gravel Bag Check Dam" detail at the end of this fact sheet).

Manufactured products, such as temporary silt dikes (SE-12), should be installed in accordance with the manufacturer's instructions. Installation typically requires anchoring or trenching of products, as well as regular maintenance to remove accumulated sediment and debris.

If grass is planted to stabilize the ditch or swale, the check dam should be removed when the grass has matured (unless the slope of the swales is greater than 4%).

The following guidance should be followed for the design and layout of check dams:

- Install the first check dam approximately 16 ft from the outfall device and at regular intervals based on slope gradient and soil type.
- Check dams should be placed at a distance and height to allow small pools to form between each check dam.
- For multiple check dam installation, backwater from a downstream check dam should reach the toes of the upstream check dam.
- A sediment trap provided immediately upstream of the check dam will help capture sediment. Due to the potential for this sediment to be resuspended in subsequent storms, the sediment trap should be cleaned following each storm event.

- High flows (typically a 2-year storm or larger) should safely flow over the check dam without an increase in upstream flooding or damage to the check dam.
- Where grass is used to line ditches, check dams should be removed when grass has matured sufficiently to protect the ditch or swale.

Materials

- Rock used for check dams should typically be 8-12 in rock and be sufficiently sized to stay in place given expected design flows in the channel. Smaller diameter rock (e.g. 2 to 4 in) can be placed on the upstream side of larger rock to increase residence time.
- Gravel bags used for check dams should conform to the requirements of SE-6, Gravel Bag Berms.
- Sandbags used for check dams should conform to SE-8, Sandbag Barrier.
- Fiber rolls used for check dams should conform to SE-5, Fiber Rolls.
- Temporary silt dikes used for check dams should conform to SE-12, Temporary Silt Dikes.

Installation

- Rock should be placed individually by hand or by mechanical methods (no dumping of rock) to achieve complete ditch or swale coverage.
- Tightly abut bags and stack according to detail shown in the figure at the end of this section (pyramid approach). Gravel bags and sandbags should not be stacked any higher than 3 ft.
- Upper rows or gravel and sand bags shall overlap joints in lower rows.
- Fiber rolls should be trenched in, backfilled, and firmly staked in place.
- Install along a level contour.
- HDPE check dams, temporary silt dikes, and other manufactured products should be used and installed per manufacturer specifications.

Costs

Cost consists of labor costs if materials are readily available (such as gravel on-site). If material must be imported, costs will increase. For other material and installation costs, see SE-5, SE-6, SE-8, SE-12, and SE-14.

Inspection and Maintenance

- BMPs must be inspected in accordance with General Permit requirements for the associated project type and risk level. It is recommended that at a minimum, BMPs be inspected weekly, prior to forecasted rain events, daily during extended rain events, and after the conclusion of rain events.
- Replace missing rock, bags, rolls, etc. Replace bags or rolls that have degraded or have become damaged.

- If the check dam is used as a sediment capture device, sediment that accumulates behind the BMP should be periodically removed in order to maintain BMP effectiveness. Sediment should be removed when the sediment accumulation reaches one-third of the barrier height.
- If the check dam is used as a grade control structure, sediment removal is not required as long as the system continues to control the grade.
- Inspect areas behind check dams for pools of standing water, especially if subjected to daily non-stormwater discharges.
- Remove accumulated sediment prior to permanent seeding or soil stabilization.
- Remove check dam and accumulated sediment when check dams are no longer needed.

References

Draft – Sedimentation and Erosion Control, and Inventory of Current Practices, USEPA, April 1990.

Manual of Standards of Erosion and Sediment Control Measures, Association of Bay Area Governments, May 1995.

Stormwater Quality Handbooks - Construction Site Best Management Practices (BMPs) Manual, State of California Department of Transportation (Caltrans), March 2003.

Stormwater Management of the Puget Sound Basin, Technical Manual, Publication #91-75, Washington State Department of Ecology, February 1992.

Erosion and Sediment Control Manual, Oregon Department of Environmental Quality, February 2005.

Metzger, M.E. 2004. Managing mosquitoes in stormwater treatment devices. University of California Division of Agriculture and Natural Resources, Publication 8125. On-line: http://anrcatalog.ucdavis.edu/pdf/8125.pdf

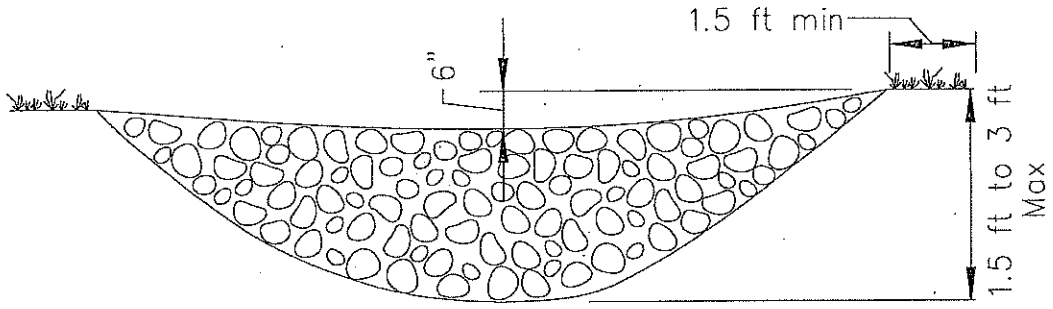

ELEVATION

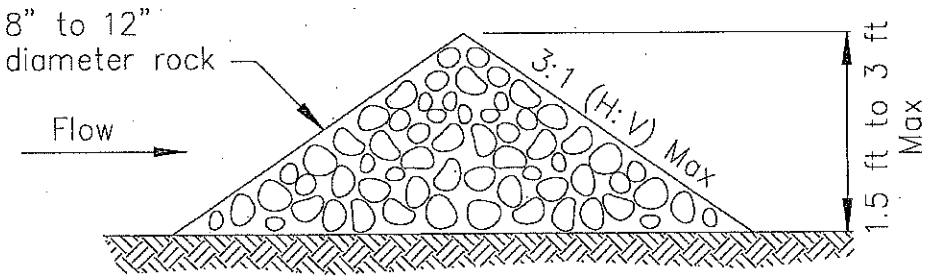

TYPICAL ROCK CHECK DAM SECTION

ROCK CHECK DAM
NOT TO SCALE

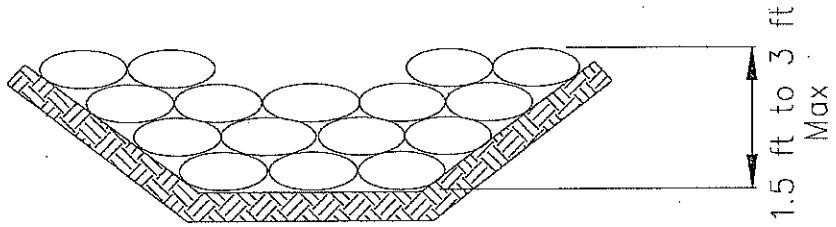

GRAVEL BAG CHECK DAM ELEVATION
NOT TO SCALE

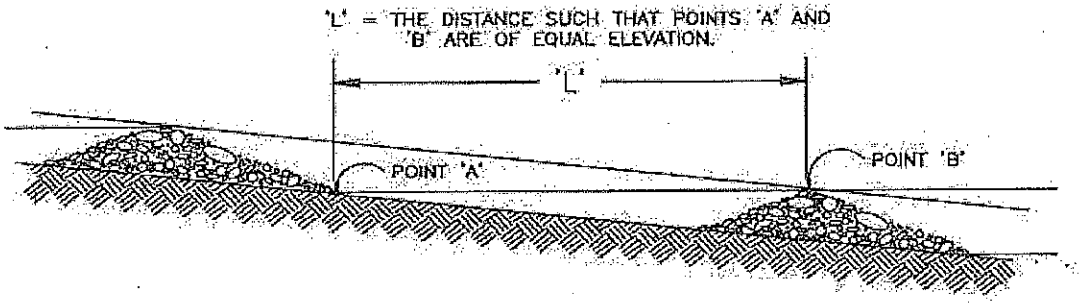

SPACING BETWEEN CHECK DAMS

Fiber Rolls

SE-5

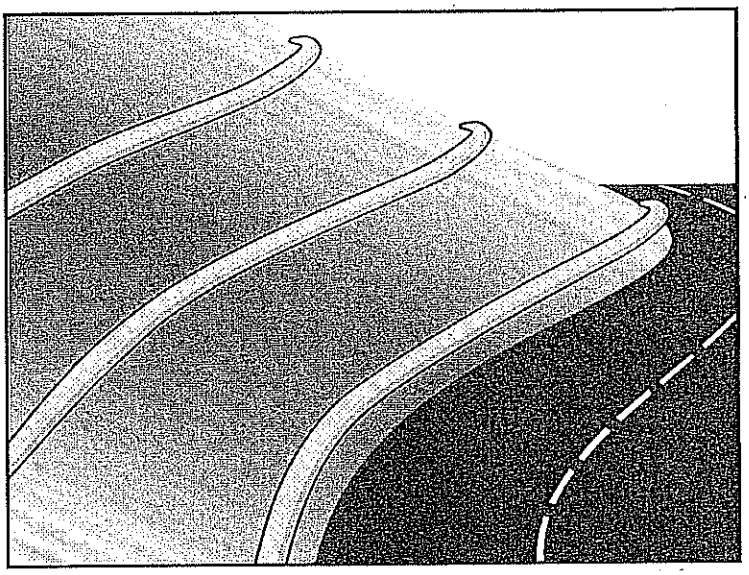

Categories

EC	Erosion Control	☒
SE	Sediment Control	☑
TC	Tracking Control	
WE	Wind Erosion Control	
NS	Non-Stormwater Management Control	
WM	Waste Management and Materials Pollution Control	

Legend:

☑ **Primary Category**

☒ **Secondary Category**

Targeted Constituents

Sediment	☑
Nutrients	
Trash	
Metals	
Bacteria	
Oil and Grease	
Organics	

Potential Alternatives

SE-1 Silt Fence

SE-6 Gravel Bag Berm

SE-8 Sandbag Barrier

SE-14 Biofilter Bags

Description and Purpose

A fiber roll consists of straw, coir, or other biodegradable materials bound into a tight tubular roll wrapped by netting, which can be photodegradable or natural. Additionally, gravel core fiber rolls are available, which contain an imbedded ballast material such as gravel or sand for additional weight when staking the rolls are not feasible (such as use as inlet protection). When fiber rolls are placed at the toe and on the face of slopes along the contours, they intercept runoff, reduce its flow velocity, release the runoff as sheet flow, and provide removal of sediment from the runoff (through sedimentation). By interrupting the length of a slope, fiber rolls can also reduce sheet and rill erosion until vegetation is established.

Suitable Applications

Fiber rolls may be suitable:

- Along the toe, top, face, and at grade breaks of exposed and erodible slopes to shorten slope length and spread runoff as sheet flow.
- At the end of a downward slope where it transitions to a steeper slope.
- Along the perimeter of a project.
- As check dams in unlined ditches with minimal grade.
- Down-slope of exposed soil areas.
- At operational storm drains as a form of inlet protection.

- Around temporary stockpiles.

Limitations

- Fiber rolls are not effective unless trenched in and staked.
- Not intended for use in high flow situations.
- Difficult to move once saturated.
- If not properly staked and trenched in, fiber rolls could be transported by high flows.
- Fiber rolls have a very limited sediment capture zone.
- Fiber rolls should not be used on slopes subject to creep, slumping, or landslide.
- Rolls typically function for 12-24 months depending upon local conditions.

Implementation

Fiber Roll Materials

- Fiber rolls should be prefabricated.
- Fiber rolls may come manufactured containing polyacrylamide (PAM), a flocculating agent within the roll. Fiber rolls impregnated with PAM provide additional sediment removal capabilities and should be used in areas with fine, clayey or silty soils to provide additional sediment removal capabilities. Monitoring may be required for these installations.
- Fiber rolls are made from weed free rice straw, flax, or a similar agricultural material bound into a tight tubular roll by netting.
- Typical fiber rolls vary in diameter from 9 in. to 20 in. Larger diameter rolls are available as well.

Installation

- Locate fiber rolls on level contours spaced as follows:
  - Slope inclination of 4:1 (H:V) or flatter: Fiber rolls should be placed at a maximum interval of 20 ft.
  - Slope inclination between 4:1 and 2:1 (H:V): Fiber Rolls should be placed at a maximum interval of 15 ft. (a closer spacing is more effective).
  - Slope inclination 2:1 (H:V) or greater: Fiber Rolls should be placed at a maximum interval of 10 ft. (a closer spacing is more effective).
- Prepare the slope before beginning installation.
- Dig small trenches across the slope on the contour. The trench depth should be ¼ to 1/3 of the thickness of the roll, and the width should equal the roll diameter, in order to provide area to backfill the trench.

- It is critical that rolls are installed perpendicular to water movement, and parallel to the slope contour.
- Start building trenches and installing rolls from the bottom of the slope and work up.
- It is recommended that pilot holes be driven through the fiber roll. Use a straight bar to drive holes through the roll and into the soil for the wooden stakes.
- Turn the ends of the fiber roll up slope to prevent runoff from going around the roll.
- Stake fiber rolls into the trench.
  - Drive stakes at the end of each fiber roll and spaced 4 ft maximum on center.
  - Use wood stakes with a nominal classification of 0.75 by 0.75 in. and minimum length of 24 in.
- If more than one fiber roll is placed in a row, the rolls should be overlapped, not abutted.
- See typical fiber roll installation details at the end of this fact sheet.

Removal

- Fiber rolls can be left in place or removed depending on the type of fiber roll and application (temporary vs. permanent installation). Typically, fiber rolls encased with plastic netting are used for a temporary application because the netting does not biodegrade. Fiber rolls used in a permanent application are typically encased with a biodegradeable material and are left in place. Removal of a fiber roll used in a permanent application can result in greater disturbance.
- Temporary installations should only be removed when up gradient areas are stabilized per General Permit requirements, and/or pollutant sources no longer present a hazard. But, they should also be removed before vegetation becomes too mature so that the removal process does not disturb more soil and vegetation than is necessary.

Costs

Material costs for regular fiber rolls range from $20 - $30 per 25 ft roll.

Material costs for PAM impregnated fiber rolls range between 7.00-$9.00 per linear foot, based upon vendor research.

Inspection and Maintenance

- BMPs must be inspected in accordance with General Permit requirements for the associated project type and risk level. It is recommended that at a minimum, BMPs be inspected weekly, prior to forecasted rain events, daily during extended rain events, and after the conclusion of rain events.
- Repair or replace split, torn, unraveling, or slumping fiber rolls.
- If the fiber roll is used as a sediment capture device, or as an erosion control device to maintain sheet flows, sediment that accumulates in the BMP should be periodically removed

in order to maintain BMP effectiveness. Sediment should be removed when sediment accumulation reaches one-third the designated sediment storage depth.

- If fiber rolls are used for erosion control, such as in a check dam, sediment removal should not be required as long as the system continues to control the grade. Sediment control BMPs will likely be required in conjunction with this type of application.
- Repair any rills or gullies promptly.

References

Stormwater Quality Handbooks - Construction Site Best Management Practices (BMPs) Manual, State of California Department of Transportation (Caltrans), March 2003.

Erosion and Sediment Control Manual, Oregon Department of Environmental Quality, February 2005.

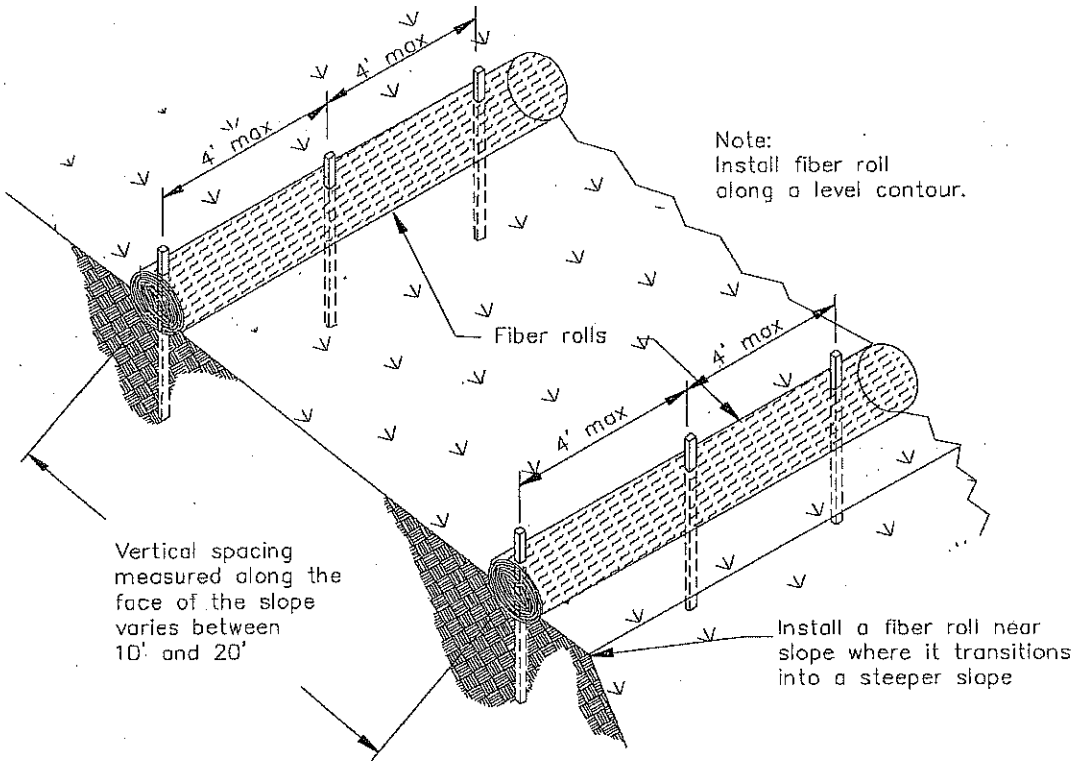

TYPICAL FIBER ROLL INSTALLATION

N.T.S.

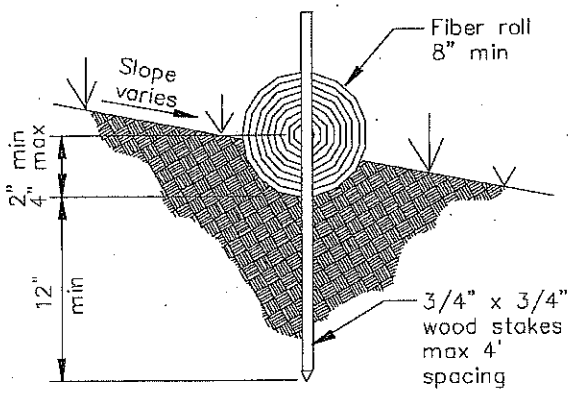

ENTRENCHMENT DETAIL

N.T.S.

Gravel Bag Berm

SE-6

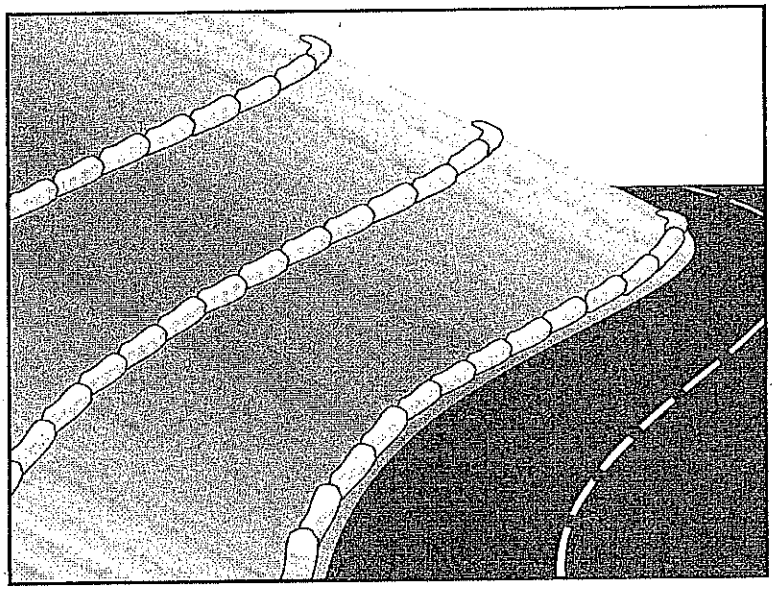

Categories

EC	Erosion Control	☒
SE	Sediment Control	☑
TC	Tracking Control	
WE	Wind Erosion Control	
NS	Non-Stormwater Management Control	
WM	Waste Management and Materials Pollution Control	

Legend:

☑ **Primary Category**

☒ **Secondary Category**

Targeted Constituents

Sediment	☑
Nutrients	
Trash	
Metals	
Bacteria	
Oil and Grease	
Organics	

Potential Alternatives

SE-1 Silt Fence

SE-5 Fiber Roll

SE-8 Sandbag Barrier

SE-14 Biofilter Bags

Description and Purpose

A gravel bag berm is a series of gravel-filled bags placed on a level contour to intercept sheet flows. Gravel bags pond sheet flow runoff, allowing sediment to settle out, and release runoff slowly as sheet flow, preventing erosion.

Suitable Applications

Gravel bag berms may be suitable:

- As a linear sediment control measure:
  - Below the toe of slopes and erodible slopes
  - As sediment traps at culvert/pipe outlets
  - Below other small cleared areas
  - Along the perimeter of a site
  - Down slope of exposed soil areas
  - Around temporary stockpiles and spoil areas
  - Parallel to a roadway to keep sediment off paved areas
  - Along streams and channels
- As a linear erosion control measure:
  - Along the face and at grade breaks of exposed and erodible slopes to shorten slope length and spread runoff as sheet flow.

- At the top of slopes to divert runoff away from disturbed slopes.
- As chevrons (small check dams) across mildly sloped construction roads. For use check dam use in channels, see SE-4, Check Dams.

Limitations

- Gravel berms may be difficult to remove.
- Removal problems limit their usefulness in landscaped areas.
- Gravel bag berm may not be appropriate for drainage areas greater than 5 acres.
- Runoff will pond upstream of the berm, possibly causing flooding if sufficient space does not exist.
- Degraded gravel bags may rupture when removed, spilling contents.
- Installation can be labor intensive.
- Durability of gravel bags is somewhat limited and bags may need to be replaced when installation is required for longer than 6 months.
- Easily damaged by construction equipment.
- When used to detain concentrated flows, maintenance requirements increase.

Implementation

General

A gravel bag berm consists of a row of open graded gravel-filled bags placed on a level contour. When appropriately placed, a gravel bag berm intercepts and slows sheet flow runoff, causing temporary ponding. The temporary ponding allows sediment to settle. The open graded gravel in the bags is porous, which allows the ponded runoff to flow slowly through the bags, releasing the runoff as sheet flows. Gravel bag berms also interrupt the slope length and thereby reduce erosion by reducing the tendency of sheet flows to concentrate into rivulets, which erode rills, and ultimately gullies, into disturbed, sloped soils. Gravel bag berms are similar to sand bag barriers, but are more porous. Generally, gravel bag berms should be used in conjunction with temporary soil stabilization controls up slope to provide effective erosion and sediment control.

Design and Layout

- Locate gravel bag berms on level contours.
- When used for slope interruption, the following slope/sheet flow length combinations apply:
  - Slope inclination of 4:1 (H:V) or flatter: Gravel bags should be placed at a maximum interval of 20 ft, with the first row near the slope toe.
  - Slope inclination between 4:1 and 2:1 (H:V): Gravel bags should be placed at a maximum interval of 15 ft. (a closer spacing is more effective), with the first row near the slope toe.

Slope inclination 2:1 (H:V) or greater: Gravel bags should be placed at a maximum interval of 10 ft. (a closer spacing is more effective), with the first row near the slope toe.

- Turn the ends of the gravel bag barriers up slope to prevent runoff from going around the berm.
- Allow sufficient space up slope from the gravel bag berm to allow ponding, and to provide room for sediment storage.
- For installation near the toe of the slope, gravel bag barriers should be set back from the slope toe to facilitate cleaning. Where specific site conditions do not allow for a set-back, the gravel bag barrier may be constructed on the toe of the slope. To prevent flows behind the barrier, bags can be placed perpendicular to a berm to serve as cross barriers.
- Drainage area should not exceed 5 acres.
- In Non-Traffic Areas:
  - Height = 18 in. maximum
  - Top width = 24 in. minimum for three or more layer construction
  - Top width = 12 in. minimum for one or two layer construction
  - Side slopes = 2:1 (H:V) or flatter
- In Construction Traffic Areas:
  - Height = 12 in. maximum
  - Top width = 24 in. minimum for three or more layer construction.
  - Top width = 12 in. minimum for one or two layer construction.
  - Side slopes = 2:1 (H:V) or flatter.
- Butt ends of bags tightly.
- On multiple row, or multiple layer construction, overlap butt joints of adjacent row and row beneath.
- Use a pyramid approach when stacking bags.

Materials

- ***Bag Material:*** Bags should be woven polypropylene, polyethylene or polyamide fabric or burlap, minimum unit weight of 4 ounces/yd^2, Mullen burst strength exceeding 300 lb/in^2 in conformance with the requirements in ASTM designation D3786, and ultraviolet stability exceeding 70% in conformance with the requirements in ASTM designation D4355.

- ***Bag Size:*** Each gravel-filled bag should have a length of 18 in., width of 12 in., thickness of 3 in., and mass of approximately 33 lbs. Bag dimensions are nominal, and may vary based on locally available materials.

- ***Fill Material:*** Fill material should be 0.5 to 1 in. crushed rock, clean and free from clay, organic matter, and other deleterious material, or other suitable open graded, non-cohesive, porous gravel.

Costs

Material costs for gravel bags are average and are dependent upon material availability. $2.50-3.00 per filled gravel bag is standard based upon vendor research.

Inspection and Maintenance

- BMPs must be inspected in accordance with General Permit requirements for the associated project type and risk level. It is recommended that at a minimum, BMPs be inspected weekly, prior to forecasted rain events, daily during extended rain events, and after the conclusion of rain events.

- Gravel bags exposed to sunlight will need to be replaced every two to three months due to degrading of the bags.

- Reshape or replace gravel bags as needed.

- Repair washouts or other damage as needed.

- Sediment that accumulates in the BMP should be periodically removed in order to maintain BMP effectiveness. Sediment should be removed when the sediment accumulation reaches one-third of the barrier height.

- Remove gravel bag berms when no longer needed and recycle gravel fill whenever possible and properly dispose of bag material. Remove sediment accumulation and clean, re-grade, and stabilize the area.

References

Handbook of Steel Drainage and Highway Construction, American Iron and Steel Institute, 1983.

Stormwater Quality Handbooks - Construction Site Best Management Practices (BMPs) Manual, State of California Department of Transportation (Caltrans), March 2003.

Stormwater Pollution Plan Handbook, First Edition, State of California, Department of Transportation Division of New Technology, Materials and Research, October 1992.

Erosion and Sediment Control Manual, Oregon Department of Environmental Quality, February 2005.

Street Sweeping and Vacuuming SE-7

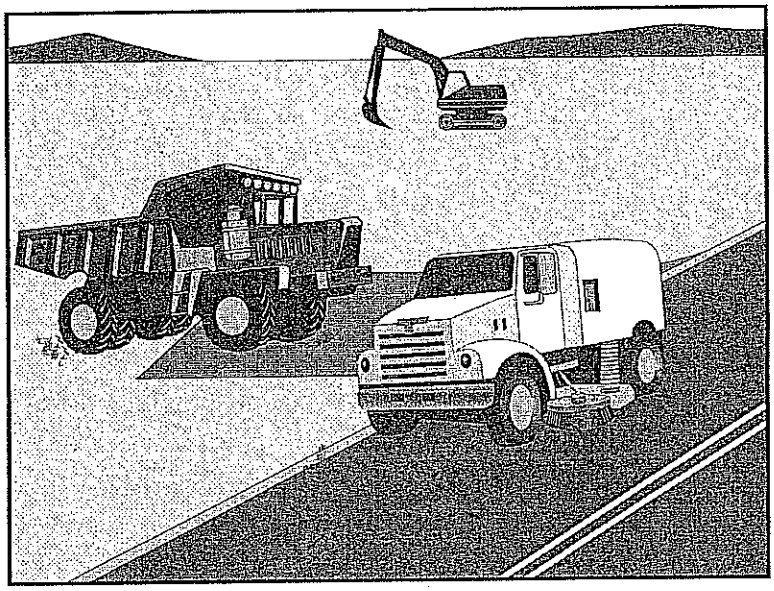

Categories

EC	Erosion Control	
SE	Sediment Control	☒
TC	Tracking Control	☑
WE	Wind Erosion Control	
NS	Non-Stormwater Management Control	
WM	Waste Management and Materials Pollution Control	

Legend:

☑ **Primary Objective**

☒ **Secondary Objective**

Targeted Constituents

Sediment	☑
Nutrients	
Trash	☑
Metals	
Bacteria	
Oil and Grease	☑
Organics	

Potential Alternatives

None

Description and Purpose

Street sweeping and vacuuming includes use of self-propelled and walk-behind equipment to remove sediment from streets and roadways, and to clean paved surfaces in preparation for final paving. Sweeping and vacuuming prevents sediment from the project site from entering storm drains or receiving waters.

Suitable Applications

Sweeping and vacuuming are suitable anywhere sediment is tracked from the project site onto public or private paved streets and roads, typically at points of egress. Sweeping and vacuuming are also applicable during preparation of paved surfaces for final paving.

Limitations

Sweeping and vacuuming may not be effective when sediment is wet or when tracked soil is caked (caked soil may need to be scraped loose).

Implementation

- Controlling the number of points where vehicles can leave the site will allow sweeping and vacuuming efforts to be focused, and perhaps save money.
- Inspect potential sediment tracking locations daily.
- Visible sediment tracking should be swept or vacuumed on a daily basis.
- Do not use kick brooms or sweeper attachments. These tend to spread the dirt rather than remove it.

- If not mixed with debris or trash, consider incorporating the removed sediment back into the project

Costs

Rental rates for self-propelled sweepers vary depending on hopper size and duration of rental. Expect rental rates from $58/hour (3 yd^3 hopper) to $88/hour (9 yd^3 hopper), plus operator costs. Hourly production rates vary with the amount of area to be swept and amount of sediment. Match the hopper size to the area and expect sediment load to minimize time spent dumping.

Inspection and Maintenance

- Inspect BMPs in accordance with General Permit requirements for the associated project type and risk level. It is recommended that at a minimum, BMPs be inspected weekly, prior to forecasted rain events, daily during extended rain events, and after the conclusion of rain events.
- When actively in use, points of ingress and egress must be inspected daily.
- When tracked or spilled sediment is observed outside the construction limits, it must be removed at least daily. More frequent removal, even continuous removal, may be required in some jurisdictions.
- Be careful not to sweep up any unknown substance or any object that may be potentially hazardous.
- Adjust brooms frequently; maximize efficiency of sweeping operations.
- After sweeping is finished, properly dispose of sweeper wastes at an approved dumpsite.

References

Stormwater Quality Handbooks - Construction Site Best Management Practices (BMPs) Manual, State of California Department of Transportation (Caltrans), November 2000.

Labor Surcharge and Equipment Rental Rates, State of California Department of Transportation (Caltrans), April 1, 2002 – March 31, 2003.

Storm Drain Inlet Protection SE-10

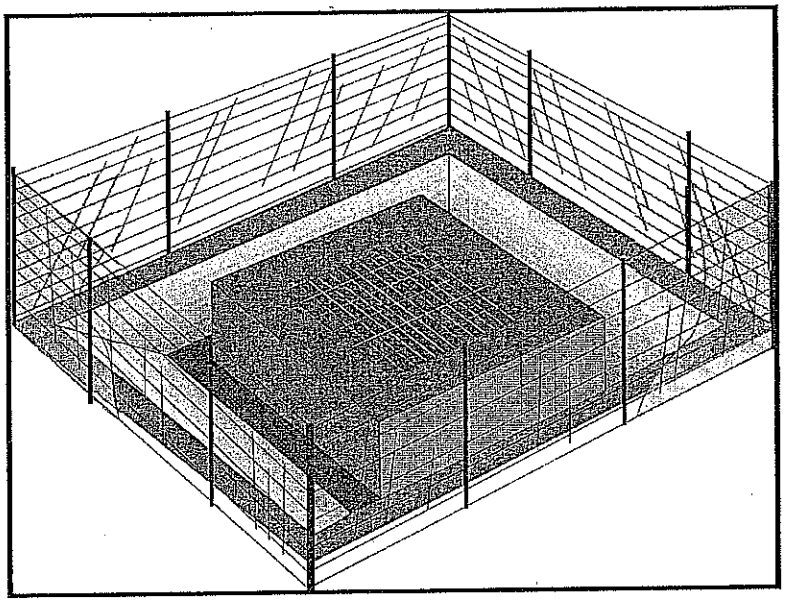

Categories

EC	Erosion Control	
SE	Sediment Control	☑
TC	Tracking Control	
WE	Wind Erosion Control	
NS	Non-Stormwater Management Control	
WM	Waste Management and Materials Pollution Control	

Legend:

☑ **Primary Category**

☒ **Secondary Category**

Targeted Constituents

Sediment	☑
Nutrients	
Trash	☒
Metals	
Bacteria	
Oil and Grease	
Organics	

Potential Alternatives

SE-1 Silt Fence

SE-5 Fiber Rolls

SE-6 Gravel Bag Berm

SE-8 Sandbag Barrier

SE-14 Biofilter Bags

Description and Purpose

Storm drain inlet protection consists of a sediment filter or an impounding area in, around or upstream of a storm drain, drop inlet, or curb inlet. Storm drain inlet protection measures temporarily pond runoff before it enters the storm drain, allowing sediment to settle. Some filter configurations also remove sediment by filtering, but usually the ponding action results in the greatest sediment reduction. Temporary geotextile storm drain inserts attach underneath storm drain grates to capture and filter storm water.

Suitable Applications

Every storm drain inlet receiving runoff from unstabilized or otherwise active work areas should be protected. Inlet protection should be used in conjunction with other erosion and sediment controls to prevent sediment-laden stormwater and non-stormwater discharges from entering the storm drain system.

Limitations

- Drainage area should not exceed 1 acre.
- In general straw bales should not be used as inlet protection.
- Requires an adequate area for water to pond without encroaching into portions of the roadway subject to traffic.

- Sediment removal may be inadequate to prevent sediment discharges in high flow conditions or if runoff is heavily sediment laden. If high flow conditions are expected, use other onsite sediment trapping techniques in conjunction with inlet protection.
- Frequent maintenance is required.
- Limit drainage area to 1 acre maximum. For drainage areas larger than 1 acre, runoff should be routed to a sediment-trapping device designed for larger flows. See BMPs SE-2, Sediment Basin, and SE-3, Sediment Traps.
- Excavated drop inlet sediment traps are appropriate where relatively heavy flows are expected, and overflow capability is needed.

Implementation

General

Inlet control measures presented in this handbook should not be used for inlets draining more than one acre. Runoff from larger disturbed areas should be first routed through SE-2, Sediment Basin or SE-3, Sediment Trap and/or used in conjunction with other drainage control, erosion control, and sediment control BMPs to protect the site. Different types of inlet protection are appropriate for different applications depending on site conditions and the type of inlet. Alternative methods are available in addition to the methods described/shown herein such as prefabricated inlet insert devices, or gutter protection devices.

Design and Layout

Identify existing and planned storm drain inlets that have the potential to receive sediment-laden surface runoff. Determine if storm drain inlet protection is needed and which method to use.

- The key to successful and safe use of storm drain inlet protection devices is to know where runoff that is directed toward the inlet to be protected will pond or be diverted as a result of installing the protection device.
  - Determine the acceptable location and extent of ponding in the vicinity of the drain inlet. The acceptable location and extent of ponding will influence the type and design of the storm drain inlet protection device.
  - Determine the extent of potential runoff diversion caused by the storm drain inlet protection device. Runoff ponded by inlet protection devices may flow around the device and towards the next downstream inlet. In some cases, this is acceptable; in other cases, serious erosion or downstream property damage can be caused by these diversions. The possibility of runoff diversions will influence whether or not storm drain inlet protection is suitable; and, if suitable, the type and design of the device.
- The location and extent of ponding, and the extent of diversion, can usually be controlled through appropriate placement of the inlet protection device. In some cases, moving the inlet protection device a short distance upstream of the actual inlet can provide more efficient sediment control, limit ponding to desired areas, and prevent or control diversions.

- Six types of inlet protection are presented below. However, it is recognized that other effective methods and proprietary devices exist and may be selected.
  - Silt Fence: Appropriate for drainage basins with less than a 5% slope, sheet flows, and flows under 0.5 cfs.
  - Excavated Drop Inlet Sediment Trap: An excavated area around the inlet to trap sediment (SE-3).
  - Gravel bag barrier: Used to create a small sediment trap upstream of inlets on sloped, paved streets. Appropriate for sheet flow or when concentrated flow may exceed 0.5 cfs, and where overtopping is required to prevent flooding.
  - Block and Gravel Filter: Appropriate for flows greater than 0.5 cfs.
  - Temporary Geotextile Storm drain Inserts: Different products provide different features. Refer to manufacturer details for targeted pollutants and additional features.
  - Biofilter Bag Barrier: Used to create a small retention area upstream of inlets and can be located on pavement or soil. Biofilter bags slowly filter runoff allowing sediment to settle out. Appropriate for flows under 0.5 cfs.
- Select the appropriate type of inlet protection and design as referred to or as described in this fact sheet.
- Provide area around the inlet for water to pond without flooding structures and property.
- Grates and spaces around all inlets should be sealed to prevent seepage of sediment-laden water.
- Excavate sediment sumps (where needed) 1 to 2 ft with 2:1 side slopes around the inlet.

Installation

- ***DI Protection Type 1 - Silt Fence*** - Similar to constructing a silt fence; see BMP SE-1, Silt Fence. Do not place fabric underneath the inlet grate since the collected sediment may fall into the drain inlet when the fabric is removed or replaced and water flow through the grate will be blocked resulting in flooding. See typical Type 1 installation details at the end of this fact sheet.

  1. Excavate a trench approximately 6 in. wide and 6 in. deep along the line of the silt fence inlet protection device.
  2. Place 2 in. by 2 in. wooden stakes around the perimeter of the inlet a maximum of 3 ft apart and drive them at least 18 in. into the ground or 12 in. below the bottom of the trench. The stakes should be at least 48 in.
  3. Lay fabric along bottom of trench, up side of trench, and then up stakes. See SE-1, Silt Fence, for details. The maximum silt fence height around the inlet is 24 in.
  4. Staple the filter fabric (for materials and specifications, see SE-1, Silt Fence) to wooden stakes. Use heavy-duty wire staples at least 1 in. in length.

5. Backfill the trench with gravel or compacted earth all the way around.

- ***DI Protection Type 2 - Excavated Drop Inlet Sediment Trap*** - Install filter fabric fence in accordance with DI Protection Type 1. Size excavated trap to provide a minimum storage capacity calculated at the rate 67 yd^3/acre of drainage area. See typical Type 2 installation details at the end of this fact sheet.

- ***DI Protection Type 3 - Gravel bag*** - Flow from a severe storm should not overtop the curb. In areas of high clay and silts, use filter fabric and gravel as additional filter media. Construct gravel bags in accordance with SE-6, Gravel Bag Berm. Gravel bags should be used due to their high permeability. See typical Type 3 installation details at the end of this fact sheet.

  1. Construct on gently sloping street.
  2. Leave room upstream of barrier for water to pond and sediment to settle.
  3. Place several layers of gravel bags – overlapping the bags and packing them tightly together.
  4. Leave gap of one bag on the top row to serve as a spillway. Flow from a severe storm (e.g., 10 year storm) should not overtop the curb.

- ***DI Protection Type 4 – Block and Gravel Filter*** - Block and gravel filters are suitable for curb inlets commonly used in residential, commercial, and industrial construction. See typical Type 4 installation details at the end of this fact sheet.

  1. Place hardware cloth or comparable wire mesh with 0.5 in. openings over the drop inlet so that the wire extends a minimum of 1 ft beyond each side of the inlet structure. If more than one strip is necessary, overlap the strips. Place woven geotextile over the wire mesh.
  2. Place concrete blocks lengthwise on their sides in a single row around the perimeter of the inlet, so that the open ends face outward, not upward. The ends of adjacent blocks should abut. The height of the barrier can be varied, depending on design needs, by stacking combinations of blocks that are 4 in., 8 in., and 12 in. wide. The row of blocks should be at least 12 in. but no greater than 24 in. high.
  3. Place wire mesh over the outside vertical face (open end) of the concrete blocks to prevent stone from being washed through the blocks. Use hardware cloth or comparable wire mesh with 0.5 in. opening.
  4. Pile washed stone against the wire mesh to the top of the blocks. Use 0.75 to 3 in.

- ***DI Protection Type 5 – Temporary Geotextile Insert (proprietary)*** – Many types of temporary inserts are available. Most inserts fit underneath the grate of a drop inlet or inside of a curb inlet and are fastened to the outside of the grate or curb. These inserts are removable and many can be cleaned and reused. Installation of these inserts differs between manufacturers. Please refer to manufacturer instruction for installation of proprietary devices.

- ***DI Protection Type 6 - Biofilter bags*** – Biofilter bags may be used as a substitute for gravel bags in low-flow situations. Biofilter bags should conform to specifications detailed in SE-14, Biofilter bags.

  1. Construct in a gently sloping area.
  2. Biofilter bags should be placed around inlets to intercept runoff flows.
  3. All bag joints should overlap by 6 in.
  4. Leave room upstream for water to pond and for sediment to settle out.
  5. Stake bags to the ground as described in the following detail. Stakes may be omitted if bags are placed on a paved surface.

Costs

- Average annual cost for installation and maintenance of DI Type 1-4 and 6 (one year useful life) is $200 per inlet.
- Temporary geotextile inserts are proprietary and cost varies by region. These inserts can often be reused and may have greater than 1 year of use if maintained and kept undamaged. Average cost per insert ranges from $50-75 plus installation, but costs can exceed $100. This cost does not include maintenance.

Inspection and Maintenance

- BMPs must be inspected in accordance with General Permit requirements for the associated project type and risk level. It is recommended that at a minimum, BMPs be inspected weekly, prior to forecasted rain events, daily during extended rain events, and after the conclusion of rain events.
- Silt Fences. If the fabric becomes clogged, torn, or degrades, it should be replaced. Make sure the stakes are securely driven in the ground and are in good shape (i.e., not bent, cracked, or splintered, and are reasonably perpendicular to the ground). Replace damaged stakes. At a minimum, remove the sediment behind the fabric fence when accumulation reaches one-third the height of the fence or barrier height.
- Gravel Filters. If the gravel becomes clogged with sediment, it should be carefully removed from the inlet and either cleaned or replaced. Since cleaning gravel at a construction site may be difficult, consider using the sediment-laden stone as fill material and put fresh stone around the inlet. Inspect bags for holes, gashes, and snags, and replace bags as needed. Check gravel bags for proper arrangement and displacement.
- Sediment that accumulates in the BMP should be periodically removed in order to maintain BMP effectiveness. Sediment should be removed when the sediment accumulation reaches one-third of the barrier height.
- Inspect and maintain temporary geotextile insert devices according to manufacturer's specifications.
- Remove storm drain inlet protection once the drainage area is stabilized.

- Clean and regrade area around the inlet and clean the inside of the storm drain inlet, as it should be free of sediment and debris at the time of final inspection.

References

Stormwater Quality Handbooks - Construction Site Best Management Practices (BMPs) Manual, State of California Department of Transportation (Caltrans), March 2003.

Stormwater Management Manual for The Puget Sound Basin, Washington State Department of Ecology, Public Review Draft, 1991.

Erosion and Sediment Control Manual, Oregon Department of Environmental Quality, February 2005.

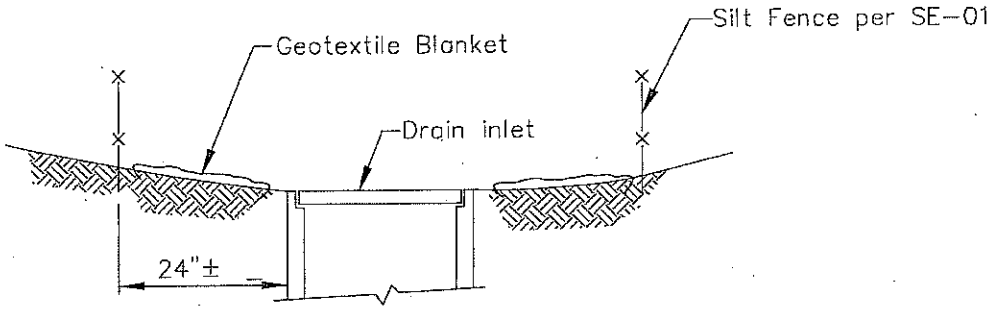

SECTION A–A

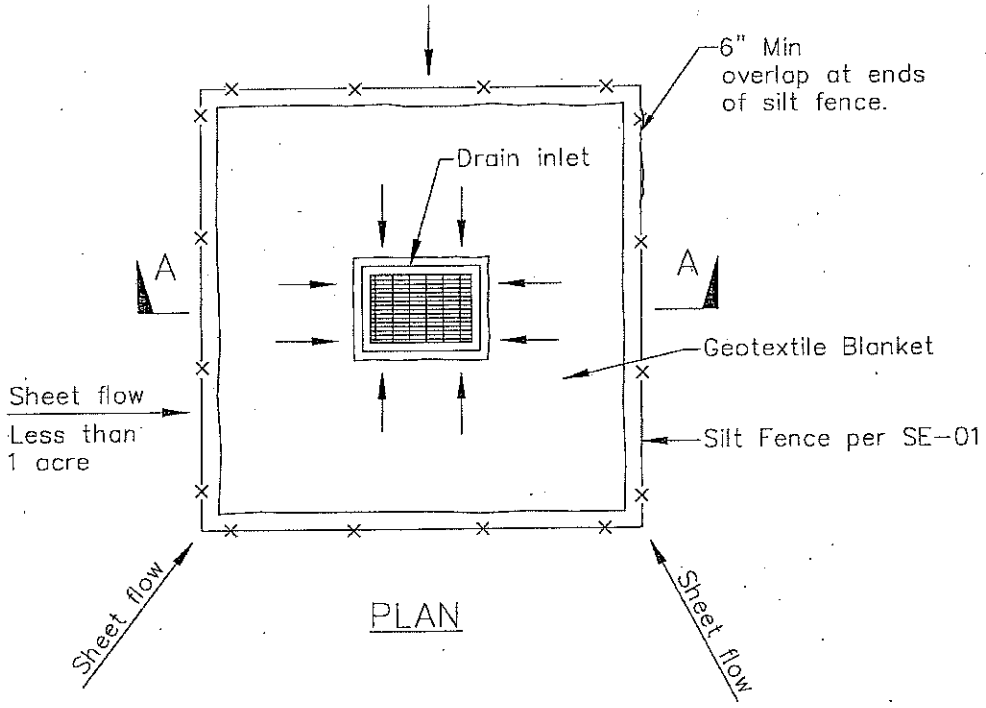

PLAN

DI PROTECTION TYPE 1
NOT TO SCALE

NOTES:

1. For use in areas where grading has been completed and final soil stabilization and seeding are pending.
2. Not applicable in paved areas.
3. Not applicable with concentrated flows.

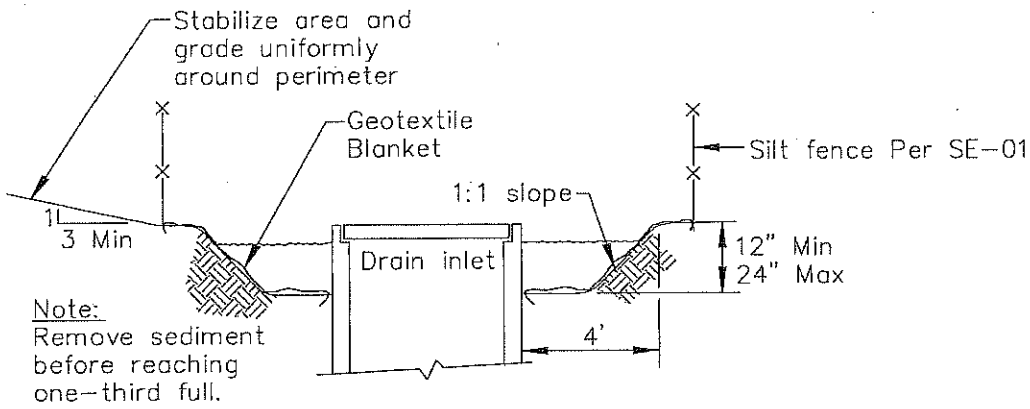

Section A–A

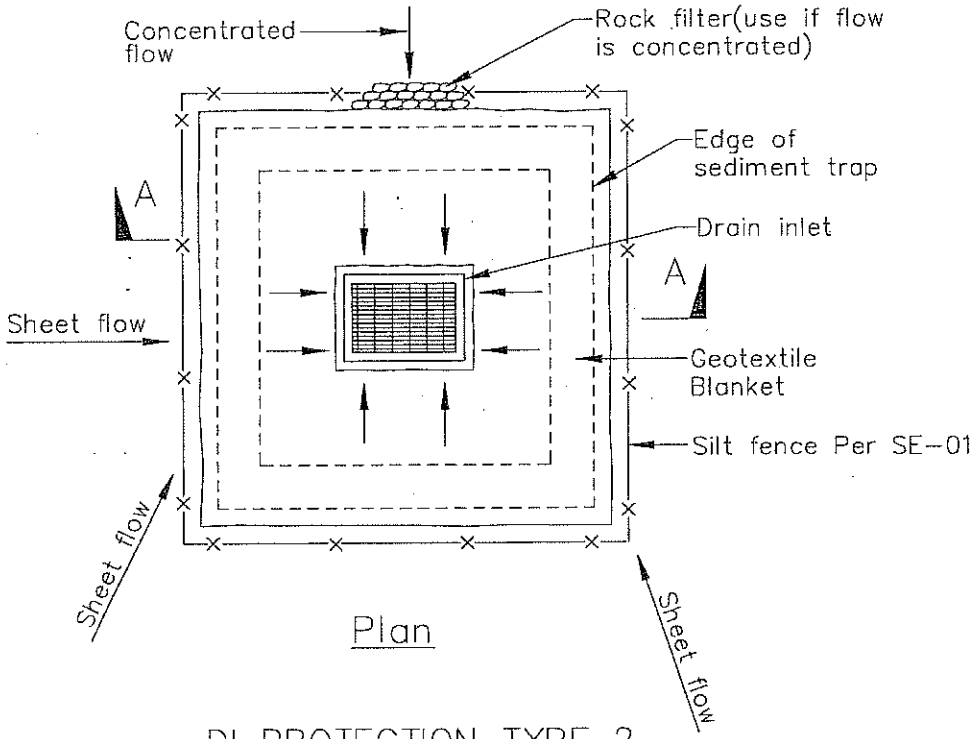

Plan

DI PROTECTION TYPE 2
NOT TO SCALE

Notes
1. For use in cleared and grubbed and in graded areas.
2. Shape basin so that longest inflow area faces longest length of trap.
3. For concentrated flows, shape basin in 2:1 ratio with length oriented towards direction of flow.

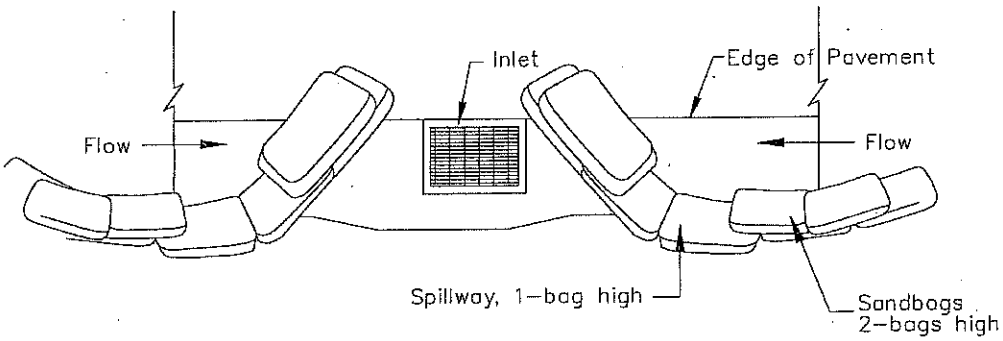

TYPICAL PROTECTION FOR INLET ON SUMP

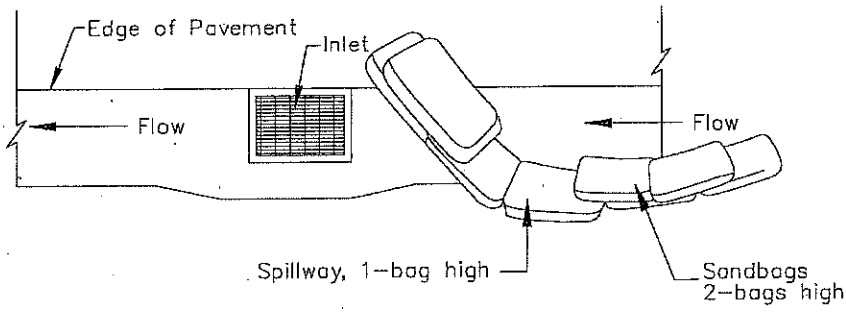

TYPICAL PROTECTION FOR INLET ON GRADE

NOTES:

1. Intended for short-term use.
2. Use to inhibit non-storm water flow.
3. Allow for proper maintenance and cleanup.
4. Bags must be removed after adjacent operation is completed
5. Not applicable in areas with high silts and clays without filter fabric.

DI PROTECTION TYPE 3
NOT TO SCALE

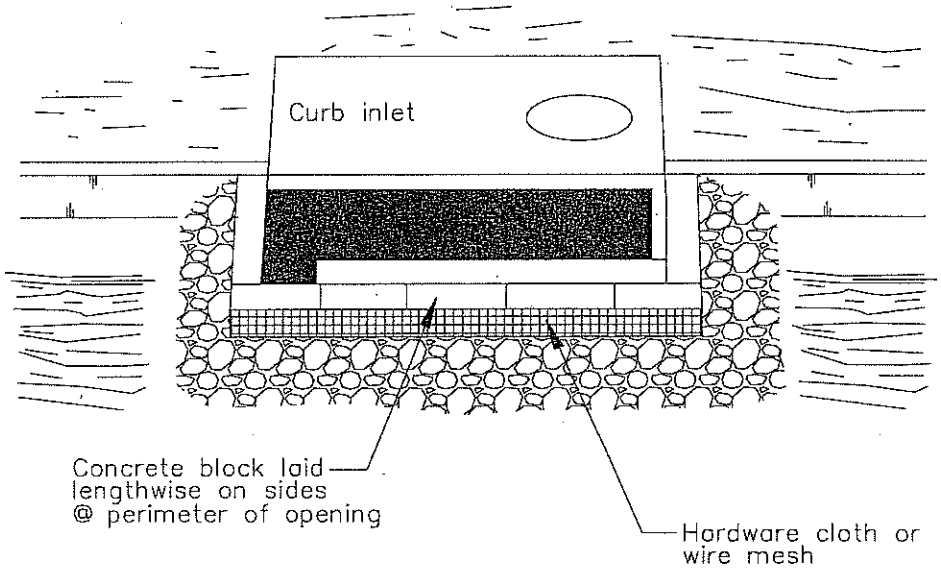

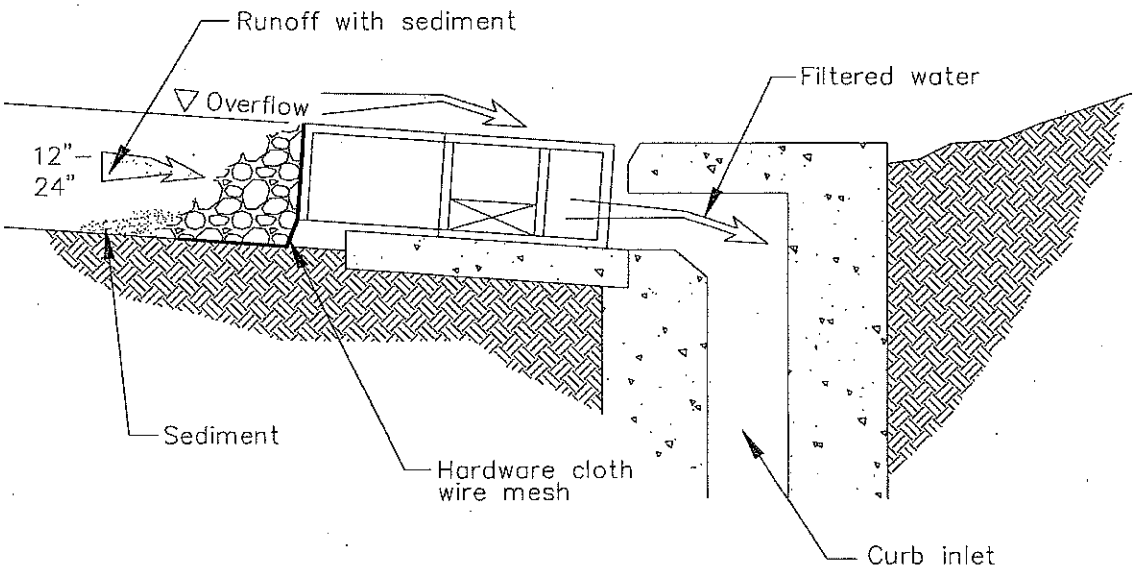

DI PROTECTION – TYPE 4

NOT TO SCALE

Biofilter Bags

SE-14

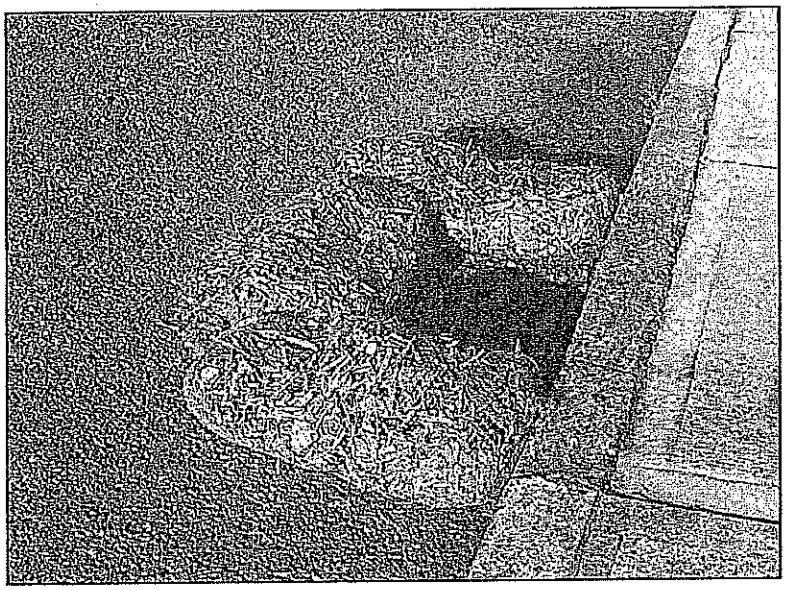

Categories

EC	Erosion Control	
SE	Sediment Control	☑
TR	Tracking Control	
WE	Wind Erosion Control	
NS	Non-Stormwater Management Control	
WM	Waste Management and Materials Pollution Control	

Legend:

☑ **Primary Category**

☒ **Secondary Category**

Targeted Constituents

Sediment	☑
Nutrients	
Trash	
Metals	
Bacteria	
Oil and Grease	
Organics	

Potential Alternatives

SE-1 Silt Fence

SE-4 Check Dams

SE-5 Fiber Roll

SE-6 Gravel Bag Berm

SE-8 Sandbag Barrier

SE-10 Storm Drain Inlet Protection

Description and Purpose

Biofilter bags, or bio-bags, are a multi-purpose sediment control BMP consisting of a plastic mesh bag filled with 100% recycled wood product waste. Biofilter bags come in a variety of sizes (30" X 18" and 30" X 9" being common) and generally have between 1-2 cubic yards of recycled wood waste (or wood chips). Biofilter bags work by detaining flow and allowing a slow rate of discharge through the wood media. This action removes suspended sediment through gravity settling of the detained water and filtration within the bag.

Suitable Applications

Biofilter bags are a short-term BMP that can be rapidly deployed, maintained, and replaced. Biofilter bags can be an effective short-term solution to place in developed rills to prevent further erosion until permanent measures can be established. Suitable short-term applications include:

- As a linear sediment control measure:
  - Below the toe of slopes and erodible slopes
  - Below other small cleared areas
  - Along the perimeter of a site (with low-expected flow)
  - Down slope of exposed soil areas
  - Around temporary stockpiles and spoil areas
  - Parallel to a roadway to keep sediment off paved areas

CASQA
CALIFORNIA STORMWATER QUALITY ASSOCIATION

- Along streams and channels

- As linear erosion control measure:
  - Along the face and at grade breaks of exposed and erodible slopes to shorten slope length and spread runoff as sheet flow
  - At the top of slopes to divert runoff away from disturbed slopes
  - As check dams across mildly sloped construction roads
- Inlet Protection (See SE-10)
- Supplement to silt fences or other sediment control devices

Limitations

- Short life-span (2-3 months); regular maintenance and replacement required to ensure effectiveness. Bags will rapidly fill with sediment and reduce permeability.
- Easily damaged by construction vehicles.
- If not properly staked, will fail on slope applications.
- If improperly installed can allow undercutting or side-cutting flow.
- Not effective where water velocities or volumes are high.
- Potentially buoyant and easily displaced if not properly installed.

Implementation

General

Biofilter bags are a relatively low cost temporary BMP that are easily deployed and have a simple installation that can be performed by hand. Without proper installation, however, biofilter bags can fail due to their light weight, potential displacement, and multiple joint locations. One of the benefits of utilizing biofilter bags is that the media (wood-product) can be recycled or used onsite when no longer needed (where acceptable).

Design and Layout – Linear control

- Locate biofilter bags on level contours.
  - Slopes between 20:1 and 4:1 (H:V): Biofilter bags should be placed at a maximum interval of 20 ft, with the first row near the slope toe.
  - Slopes between 4:1 and 2:1 (H:V): Biofilter bags should be placed at a maximum interval of 15 ft, with the first row near the slope toe.
  - Slopes 2:1 (H:V) or steeper: Biofilter bags should be placed at a maximum interval of 10 ft., with the first row placed the slope toe.

- Turn the ends of the biofilter bag barriers up slope to prevent runoff from going around the berm.
- Allow sufficient space up slope from the biofilter bag berm to allow ponding, and to provide room for sediment storage.
- Stake biofilter bags into a 1 to 2 in. deep trench with a width equal to the bag.
  - Drive one stake at each end of the bag.
  - Use wood stakes with a nominal classification of 0.75 by 0.75 in. and minimum length of 24 in.
- Biofilter bags should be overlapped (6 in.), not abutted.

Costs

Pre-filled biofilter bags cost approximately $2.50-$3.50 per bag, dependent upon size.

Inspection and Maintenance

- BMPs must be inspected in accordance with General Permit requirements for the associated project type and risk level. It is recommended that at a minimum, BMPs be inspected weekly, prior to forecasted rain events, daily during extended rain events, and after the conclusion of rain events.
- Biofilter bags exposed to sunlight will need to be replaced every two to three months due to degrading of the bags.
- Reshape or replace biofilter bags as needed.
- Repair washouts or other damage as needed.
- Sediment that is retained by the BMP should be periodically removed in order to maintain BMP effectiveness. Sediment should be removed when the sediment accumulation reaches one-third of the barrier height.
- Remove biofilter bag berms when no longer needed. Remove sediment accumulation and clean, re-grade, and stabilize the area. Biofilter media may be used on-site, if allowed.

References

Catalog of Stormwater Best Management Practices for Idaho Cities and Counties. Volume 2, Section 7, BMP 34 – Biofilter Bags, Idaho Department of Environmental Quality, 2005.

Erosion and Sediment Control Manual, Oregon Department of Environmental Quality, February 2005.

Stormwater Quality Handbooks Construction Site Best Management Practices (BMPs) Manual, State of California Department of Transportation (Caltrans), March 2003.

Wind Erosion Control WE-1

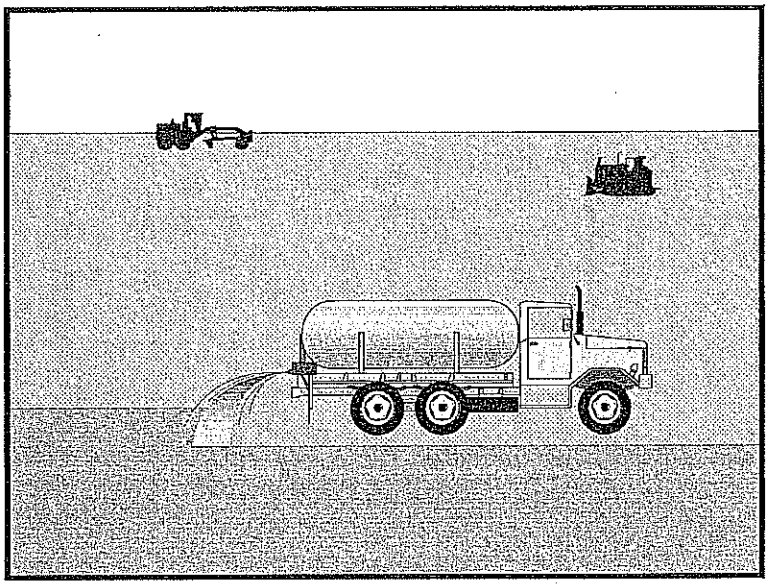

Categories

EC	Erosion Control	
SE	Sediment Control	☒
TC	Tracking Control	
WE	Wind Erosion Control	☑
NS	Non-Stormwater Management Control	
WM	Waste Management and Materials Pollution Control	

Legend:

☑ **Primary Category**

☒ **Secondary Category**

Targeted Constituents

Sediment	☑
Nutrients	
Trash	
Metals	
Bacteria	
Oil and Grease	
Organics	

Potential Alternatives

EC-5 Soil Binders

Description and Purpose

Wind erosion or dust control consists of applying water or other chemical dust suppressants as necessary to prevent or alleviate dust nuisance generated by construction activities. Covering small stockpiles or areas is an alternative to applying water or other dust palliatives.

California's Mediterranean climate, with a short "wet" season and a typically long, hot "dry" season, allows the soils to thoroughly dry out. During the dry season, construction activities are at their peak, and disturbed and exposed areas are increasingly subject to wind erosion, sediment tracking and dust generated by construction equipment. Site conditions and climate can make dust control more of an erosion problem than water based erosion. Additionally, many local agencies, including Air Quality Management Districts, require dust control and/or dust control permits in order to comply with local nuisance laws, opacity laws (visibility impairment) and the requirements of the Clean Air Act. Wind erosion control is required to be implemented at all construction sites greater than 1 acre by the General Permit.

Suitable Applications

Most BMPs that provide protection against water-based erosion will also protect against wind-based erosion and dust control requirements required by other agencies will generally meet wind erosion control requirements for water quality protection. Wind erosion control BMPs are suitable during the following construction activities:

- Construction vehicle traffic on unpaved roads
- Drilling and blasting activities
- Soils and debris storage piles
- Batch drop from front-end loaders
- Areas with unstabilized soil
- Final grading/site stabilization

Limitations

- Watering prevents dust only for a short period (generally less than a few hours) and should be applied daily (or more often) to be effective.
- Over watering may cause erosion and track-out.
- Oil or oil-treated subgrade should not be used for dust control because the oil may migrate into drainageways and/or seep into the soil.
- Chemical dust suppression agents may have potential environmental impacts. Selected chemical dust control agents should be environmentally benign.
- Effectiveness of controls depends on soil, temperature, humidity, wind velocity and traffic.
- Chemical dust suppression agents should not be used within 100 feet of wetlands or water bodies.
- Chemically treated subgrades may make the soil water repellant, interfering with long-term infiltration and the vegetation/re-vegetation of the site. Some chemical dust suppressants may be subject to freezing and may contain solvents and should be handled properly.
- In compacted areas, watering and other liquid dust control measures may wash sediment or other constituents into the drainage system.
- If the soil surface has minimal natural moisture, the affected area may need to be pre-wetted so that chemical dust control agents can uniformly penetrate the soil surface.

Implementation

Dust Control Practices

Dust control BMPs generally stabilize exposed surfaces and minimize activities that suspend or track dust particles. The following table presents dust control practices that can be applied to varying site conditions that could potentially cause dust. For heavily traveled and disturbed areas, wet suppression (watering), chemical dust suppression, gravel asphalt surfacing, temporary gravel construction entrances, equipment wash-out areas, and haul truck covers can be employed as dust control applications. Permanent or temporary vegetation and mulching can be employed for areas of occasional or no construction traffic. Preventive measures include minimizing surface areas to be disturbed, limiting onsite vehicle traffic to 15 mph or less, and controlling the number and activity of vehicles on a site at any given time.

Chemical dust suppressants include: mulch and fiber based dust palliatives (e.g. paper mulch with gypsum binder), salts and brines (e.g. calcium chloride, magnesium chloride), non-petroleum based organics (e.g. vegetable oil, lignosulfonate), petroleum based organics (e.g. asphalt emulsion, dust oils, petroleum resins), synthetic polymers (e.g. polyvinyl acetate, vinyls, acrylic), clay additives (e.g. bentonite, montimorillonite) and electrochemical products (e.g. enzymes, ionic products).

	Dust Control Practices							
Site Condition	Permanent Vegetation	Mulching	Wet Suppression (Watering)	Chemical Dust Suppression	Gravel or Asphalt	Temporary Gravel Construction Entrances/Equipment Wash Down	Synthetic Covers	Minimize Extent of Disturbed Area
Disturbed Areas not Subject to Traffic	x	x	x	x	x			x
Disturbed Areas Subject to Traffic			x	x	x	x		x
Material Stockpiles		x	x	x			x	x
Demolition			x			x	x	
Clearing/ Excavation			x	x				x
Truck Traffic on Unpaved Roads			x	x	x	x	x	
Tracking					x	x		

Additional preventive measures include:

- Schedule construction activities to minimize exposed area (see EC-1, Scheduling).
- Quickly treat exposed soils using water, mulching, chemical dust suppressants, or stone/gravel layering.
- Identify and stabilize key access points prior to commencement of construction.
- Minimize the impact of dust by anticipating the direction of prevailing winds.
- Restrict construction traffic to stabilized roadways within the project site, as practicable.
- Water should be applied by means of pressure-type distributors or pipelines equipped with a spray system or hoses and nozzles that will ensure even distribution.
- All distribution equipment should be equipped with a positive means of shutoff.
- Unless water is applied by means of pipelines, at least one mobile unit should be available at all times to apply water or dust palliative to the project.
- If reclaimed waste water is used, the sources and discharge must meet California Department of Health Services water reclamation criteria and the Regional Water Quality

Control Board (RWQCB) requirements. Non-potable water should not be conveyed in tanks or drain pipes that will be used to convey potable water and there should be no connection between potable and non-potable supplies. Non-potable tanks, pipes, and other conveyances should be marked, "NON-POTABLE WATER - DO NOT DRINK."

- Pave or chemically stabilize access points where unpaved traffic surfaces adjoin paved roads.
- Provide covers for haul trucks transporting materials that contribute to dust.
- Provide for rapid clean up of sediments deposited on paved roads. Furnish stabilized construction road entrances and wheel wash areas.
- Stabilize inactive areas of construction sites using temporary vegetation or chemical stabilization methods.

For chemical stabilization, there are many products available for chemically stabilizing gravel roadways and stockpiles. If chemical stabilization is used, the chemicals should not create any adverse effects on stormwater, plant life, or groundwater and should meet all applicable regulatory requirements.

Costs

Installation costs for water and chemical dust suppression vary based on the method used and the length of effectiveness. Annual costs may be high since some of these measures are effective for only a few hours to a few days.

Inspection and Maintenance

- Inspect and verify that activity-based BMPs are in place prior to the commencement of associated activities.
- BMPs must be inspected in accordance with General Permit requirements for the associated project type and risk level. It is recommended that at a minimum, BMPs be inspected weekly, prior to forecasted rain events, daily during extended rain events, and after the conclusion of rain events.
- Check areas protected to ensure coverage.
- Most water-based dust control measures require frequent application, often daily or even multiple times per day. Obtain vendor or independent information on longevity of chemical dust suppressants.

References

Best Management Practices and Erosion Control Manual for Construction Sites, Flood Control District of Maricopa County, Arizona, September 1992.

California Air Pollution Control Laws, California Air Resources Board, updated annually.

Construction Manual, Chapter 4, Section 10, "Dust Control"; Section 17, "Watering"; and Section 18, "Dust Palliative", California Department of Transportation (Caltrans), July 2001.

Prospects for Attaining the State Ambient Air Quality Standards for Suspended Particulate Matter (PM10), Visibility Reducing Particles, Sulfates, Lead, and Hydrogen Sulfide, California Air Resources Board, April 1991.

Stormwater Quality Handbooks Construction Site Best Management Practices (BMPs) Manual, State of California Department of Transportation (Caltrans), March 2003.

Stabilized Construction Entrance/Exit TC-1

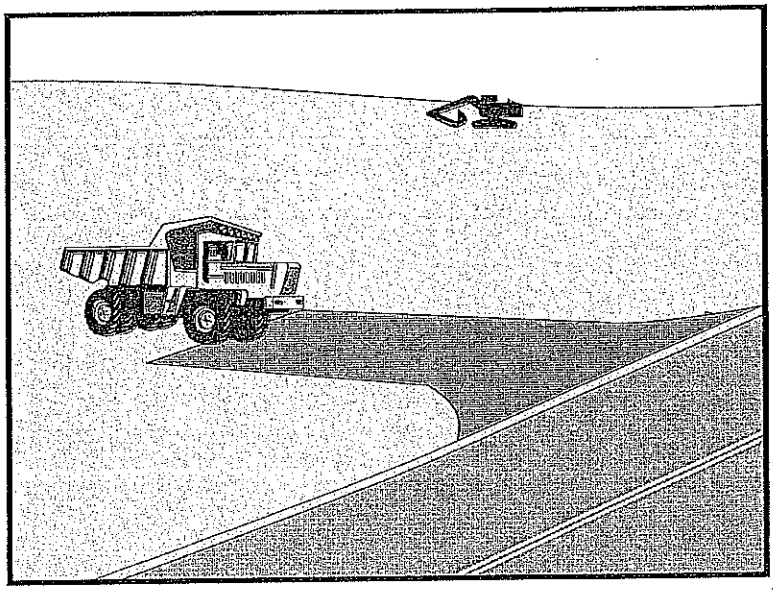

Categories		
EC	Erosion Control	☒
SE	Sediment Control	☒
TC	Tracking Control	☑
WE	Wind Erosion Control	
NS	Non-Stormwater Management Control	
WM	Waste Management and Materials Pollution Control	

Legend:

☑ **Primary Objective**

☒ **Secondary Objective**

Targeted Constituents	
Sediment	☑
Nutrients	
Trash	
Metals	
Bacteria	
Oil and Grease	
Organics	

Potential Alternatives

None

Description and Purpose

A stabilized construction access is defined by a point of entrance/exit to a construction site that is stabilized to reduce the tracking of mud and dirt onto public roads by construction vehicles.

Suitable Applications

Use at construction sites:

- Where dirt or mud can be tracked onto public roads.
- Adjacent to water bodies.
- Where poor soils are encountered.
- Where dust is a problem during dry weather conditions.

Limitations

- Entrances and exits require periodic top dressing with additional stones.
- This BMP should be used in conjunction with street sweeping on adjacent public right of way.
- Entrances and exits should be constructed on level ground only.
- Stabilized construction entrances are rather expensive to construct and when a wash rack is included, a sediment trap of some kind must also be provided to collect wash water runoff.

CASQA
CALIFORNIA STORMWATER QUALITY ASSOCIATION

Implementation

General

A stabilized construction entrance is a pad of aggregate underlain with filter cloth located at any point where traffic will be entering or leaving a construction site to or from a public right of way, street, alley, sidewalk, or parking area. The purpose of a stabilized construction entrance is to reduce or eliminate the tracking of sediment onto public rights of way or streets. Reducing tracking of sediments and other pollutants onto paved roads helps prevent deposition of sediments into local storm drains and production of airborne dust.

Where traffic will be entering or leaving the construction site, a stabilized construction entrance should be used. NPDES permits require that appropriate measures be implemented to prevent tracking of sediments onto paved roadways, where a significant source of sediments is derived from mud and dirt carried out from unpaved roads and construction sites.

Stabilized construction entrances are moderately effective in removing sediment from equipment leaving a construction site. The entrance should be built on level ground. Advantages of the Stabilized Construction Entrance/Exit is that it does remove some sediment from equipment and serves to channel construction traffic in and out of the site at specified locations. Efficiency is greatly increased when a washing rack is included as part of a stabilized construction entrance/exit.

Design and Layout

- Construct on level ground where possible.
- Select 3 to 6 in. diameter stones.
- Use minimum depth of stones of 12 in. or as recommended by soils engineer.
- Construct length of 50 ft or maximum site will allow, and 10 ft minimum width or to accommodate traffic.
- Rumble racks constructed of steel panels with ridges and installed in the stabilized entrance/exit will help remove additional sediment and to keep adjacent streets clean.
- Provide ample turning radii as part of the entrance.
- Limit the points of entrance/exit to the construction site.
- Limit speed of vehicles to control dust.
- Properly grade each construction entrance/exit to prevent runoff from leaving the construction site.
- Route runoff from stabilized entrances/exits through a sediment trapping device before discharge.
- Design stabilized entrance/exit to support heaviest vehicles and equipment that will use it.

- Select construction access stabilization (aggregate, asphaltic concrete, concrete) based on longevity, required performance, and site conditions. Do not use asphalt concrete (AC) grindings for stabilized construction access/roadway.
- If aggregate is selected, place crushed aggregate over geotextile fabric to at least 12 in. depth, or place aggregate to a depth recommended by a geotechnical engineer. A crushed aggregate greater than 3 in. but smaller than 6 in. should be used.
- Designate combination or single purpose entrances and exits to the construction site.
- Require that all employees, subcontractors, and suppliers utilize the stabilized construction access.
- Implement SE-7, Street Sweeping and Vacuuming, as needed.
- All exit locations intended to be used for more than a two-week period should have stabilized construction entrance/exit BMPs.

Inspection and Maintenance

- Inspect and verify that activity–based BMPs are in place prior to the commencement of associated activities. While activities associated with the BMPs are under way, inspect BMPs in accordance with General Permit requirements for the associated project type and risk level. It is recommended that at a minimum, BMPs be inspected weekly, prior to forecasted rain events, daily during extended rain events, and after the conclusion of rain events.
- Inspect local roads adjacent to the site daily. Sweep or vacuum to remove visible accumulated sediment.
- Remove aggregate, separate and dispose of sediment if construction entrance/exit is clogged with sediment.
- Keep all temporary roadway ditches clear.
- Check for damage and repair as needed.
- Replace gravel material when surface voids are visible.
- Remove all sediment deposited on paved roadways within 24 hours.
- Remove gravel and filter fabric at completion of construction

Costs

Average annual cost for installation and maintenance may vary from $1,200 to $4,800 each, averaging $2,400 per entrance. Costs will increase with addition of washing rack, and sediment trap. With wash rack, costs range from $1,200 - $6,000 each, averaging $3,600 per entrance.

References

Manual of Standards of Erosion and Sediment Control Measures, Association of Bay Area Governments, May 1995.

National Management Measures to Control Nonpoint Source Pollution from Urban Areas, USEPA Agency, 2002.

Proposed Guidance Specifying Management Measures for Sources of Nonpoint Pollution in Coastal Waters, Work Group Working Paper, USEPA, April 1992.

Stormwater Quality Handbooks Construction Site Best Management Practices (BMPs) Manual, State of California Department of Transportation (Caltrans), November 2000.

Stormwater Management of the Puget Sound Basin, Technical Manual, Publication #91-75, Washington State Department of Ecology, February 1992.

Virginia Erosion and Sedimentation Control Handbook, Virginia Department of Conservation and Recreation, Division of Soil and Water Conservation, 1991.

Guidance Specifying Management Measures for Nonpoint Pollution in Coastal Waters, EPA 840-B-9-002, USEPA, Office of Water, Washington, DC, 1993.

Water Quality Management Plan for the Lake Tahoe Region, Volume II, Handbook of Management Practices, Tahoe Regional Planning Agency, November 1988.

Stabilized Construction Entrance/Exit TC-1

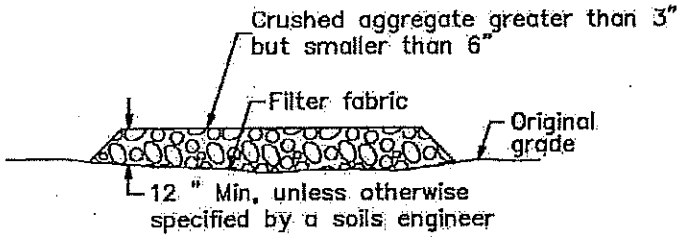

SECTION B–B
NTS

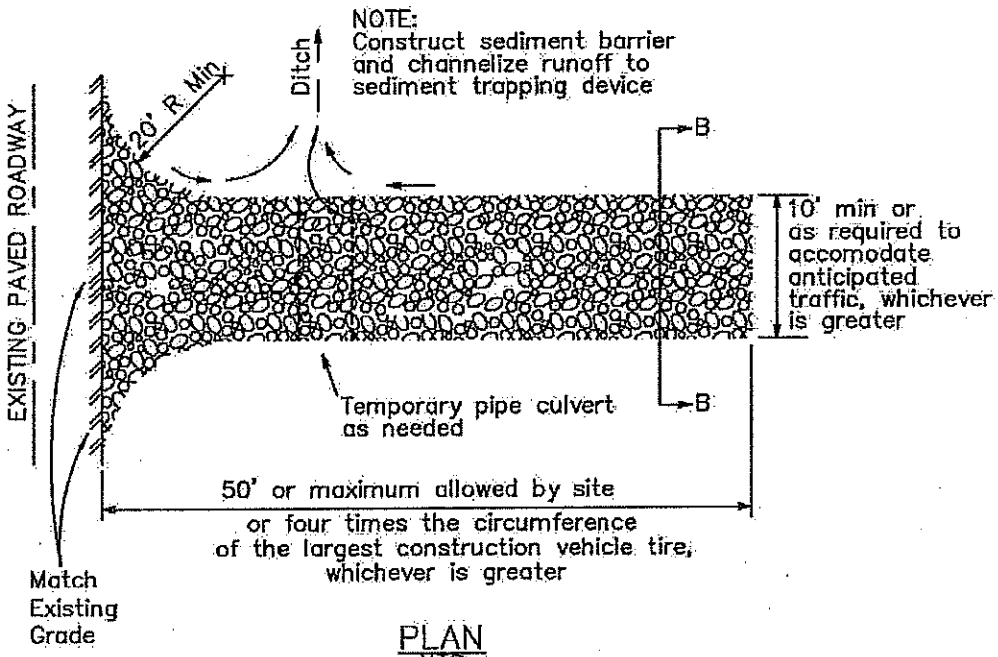

PLAN
NTS

Stabilized Construction Entrance/Exit TC-1

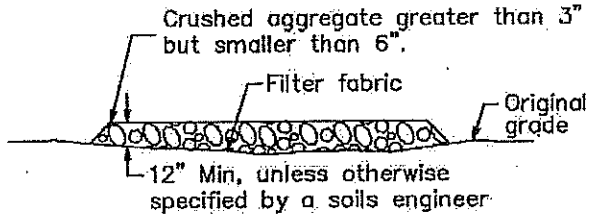

SECTION B–B
NTS

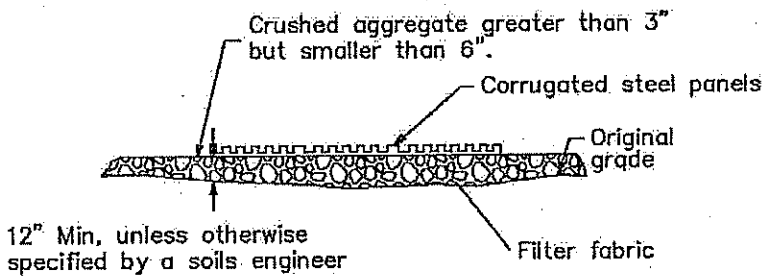

SECTION A–A
NOT TO SCALE

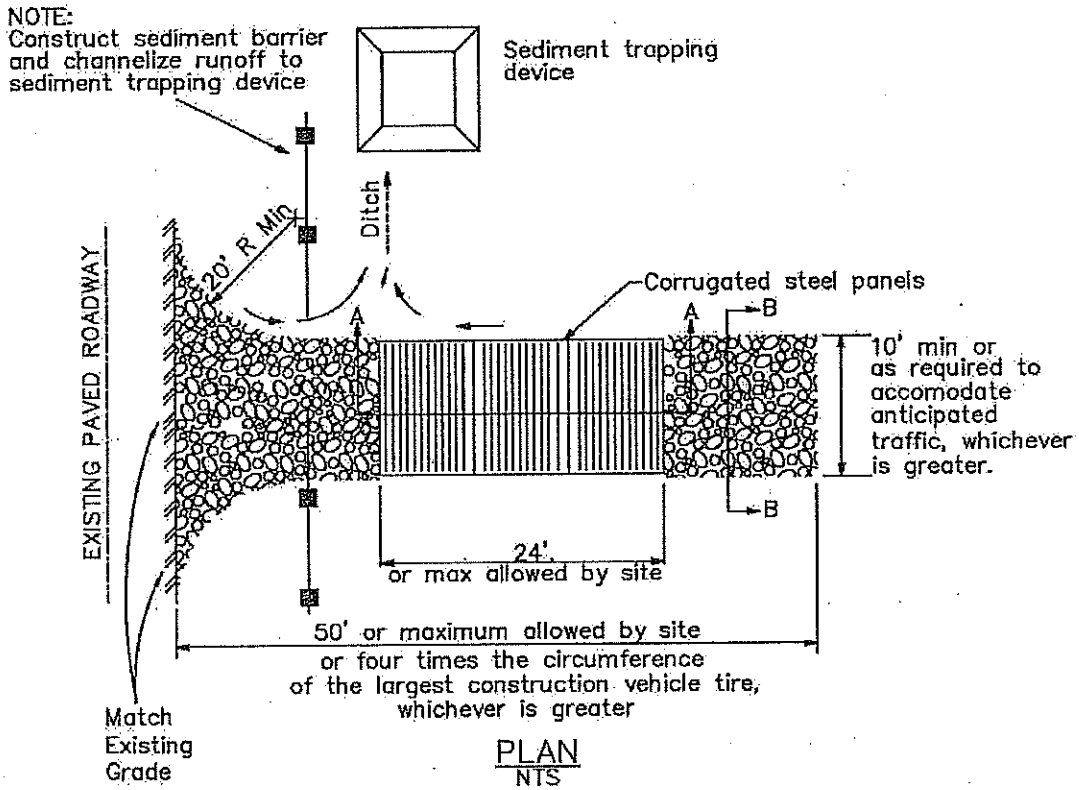

PLAN
NTS

Stabilized Construction Roadway TC-2

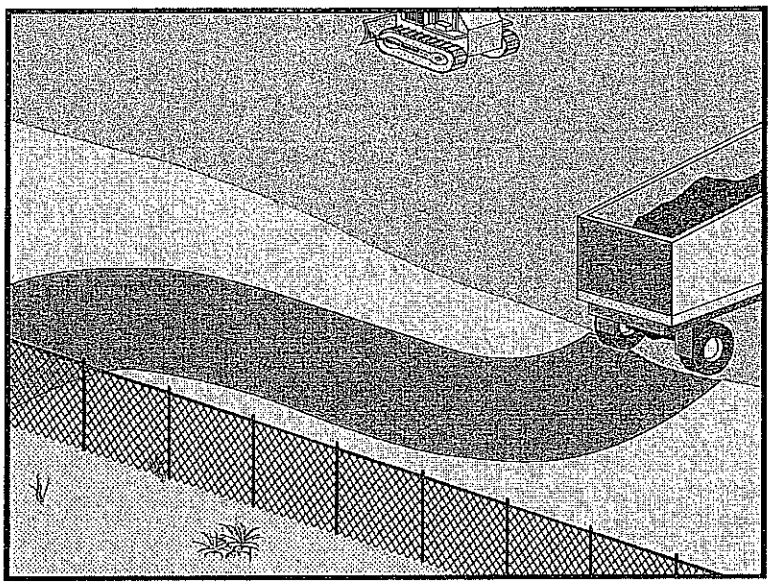

Categories		
EC	Erosion Control	☒
SE	Sediment Control	☒
TC	Tracking Control	☑
WE	Wind Erosion Control	
NS	Non-Stormwater Management Control	
WM	Waste Management and Materials Pollution Control	

Legend:

☑ **Primary Objective**

☒ **Secondary Objective**

Targeted Constituents	
Sediment	☑
Nutrients	
Trash	
Metals	
Bacteria	
Oil and Grease	
Organics	

Potential Alternatives

None

Description and Purpose

Access roads, subdivision roads, parking areas, and other onsite vehicle transportation routes should be stabilized immediately after grading, and frequently maintained to prevent erosion and control dust.

Suitable Applications

This BMP should be applied for the following conditions:

- Temporary Construction Traffic:
  - Phased construction projects and offsite road access
  - Construction during wet weather
- Construction roadways and detour roads:
  - Where mud tracking is a problem during wet weather
  - Where dust is a problem during dry weather
  - Adjacent to water bodies
  - Where poor soils are encountered

Limitations

- The roadway must be removed or paved when construction is complete.
- Certain chemical stabilization methods may cause stormwater or soil pollution and should not be used. See WE-1, Wind Erosion Control.

- Management of construction traffic is subject to air quality control measures. Contact the local air quality management agency.
- Materials will likely need to be removed prior to final project grading and stabilization.
- Use of this BMP may not be applicable to very short duration projects.

Implementation

General

Areas that are graded for construction vehicle transport and parking purposes are especially susceptible to erosion and dust. The exposed soil surface is continually disturbed, leaving no opportunity for vegetative stabilization. Such areas also tend to collect and transport runoff waters along their surfaces. During wet weather, they often become muddy quagmires that generate significant quantities of sediment that may pollute nearby streams or be transported offsite on the wheels of construction vehicles. Dirt roads can become so unstable during wet weather that they are virtually unusable.

Efficient construction road stabilization not only reduces onsite erosion but also can significantly speed onsite work, avoid instances of immobilized machinery and delivery vehicles, and generally improve site efficiency and working conditions during adverse weather

Installation/Application Criteria

Permanent roads and parking areas should be paved as soon as possible after grading. As an alternative where construction will be phased, the early application of gravel or chemical stabilization may solve potential erosion and stability problems. Temporary gravel roadway should be considered during the rainy season and on slopes greater than 5%.

Temporary roads should follow the contour of the natural terrain to the maximum extent possible. Slope should not exceed 15%. Roadways should be carefully graded to drain transversely. Provide drainage swales on each side of the roadway in the case of a crowned section or one side in the case of a super elevated section. Simple gravel berms without a trench can also be used.

Installed inlets should be protected to prevent sediment laden water from entering the storm sewer system (SE-10, Storm Drain Inlet Protection). In addition, the following criteria should be considered.

- Road should follow topographic contours to reduce erosion of the roadway.
- The roadway slope should not exceed 15%.
- Chemical stabilizers or water are usually required on gravel or dirt roads to prevent dust (WE-1, Wind Erosion Control).
- Properly grade roadway to prevent runoff from leaving the construction site.
- Design stabilized access to support heaviest vehicles and equipment that will use it.

- Stabilize roadway using aggregate, asphalt concrete, or concrete based on longevity, required performance, and site conditions. The use of cold mix asphalt or asphalt concrete (AC) grindings for stabilized construction roadway is not allowed.
- Coordinate materials with those used for stabilized construction entrance/exit points.
- If aggregate is selected, place crushed aggregate over geotextile fabric to at least 12 in. depth. A crushed aggregate greater than 3 in. but smaller than 6 in. should be used.

Inspection and Maintenance

- Inspect and verify that activity–based BMPs are in place prior to the commencement of associated activities. While activities associated with the BMP are under way, inspect BMPs in accordance with General Permit requirements for the associated project type and risk level. It is recommended that at a minimum, BMPs be inspected weekly, prior to forecasted rain events, daily during extended rain events, and after the conclusion of rain events.
- Keep all temporary roadway ditches clear.
- When no longer required, remove stabilized construction roadway and re-grade and repair slopes.
- Periodically apply additional aggregate on gravel roads.
- Active dirt construction roads are commonly watered three or more times per day during the dry season.

Costs

Gravel construction roads are moderately expensive, but cost is often balanced by reductions in construction delay. No additional costs for dust control on construction roads should be required above that needed to meet local air quality requirements.

References

Blueprint for a Clean Bay: Best Management Practices to Prevent Stormwater Pollution from Construction Related Activities; Santa Clara Valley Nonpoint Source Pollution Control Program, 1995.

Coastal Nonpoint Pollution Control Program; Program Development and Approval Guidance, Working Group, Working Paper; USEPA, April 1992.

Manual of Standards of Erosion and Sediment Control Measures, Association of Bay Area Governments, May 1995.

Stormwater Quality Handbooks Construction Site Best Management Practices (BMPs) Manual, State of California Department of Transportation (Caltrans), November 2000.

Stormwater Management for Construction Activities, Developing Pollution Prevention Plans and Best Management Practices, EPA 832-R-92005; USEPA, April 1992.

Stormwater Management of the Puget Sound Basin, Technical Manual, Publication #91-75, Washington State Department of Ecology, February 1992.

Virginia Erosion and Sedimentation Control Handbook, Virginia Department of Conservation and Recreation, Division of Soil and Water Conservation, 1991.

Water Quality Management Plan for the Lake Tahoe Region, Volume II, Handbook of Management Practices, Tahoe Regional Planning Agency, November 1988.

C&D Debris Ordinance Overview

C&D Debris Waste Management Plan
City of Sacramento Solid Waste Services
2812 Meadowview Road, Building 1
Sacramento, CA 95832
Phone: (916) 808-4839 / Fax: (916) 808-4999
C&D@cityofsacramento.org

Construction and Demolition (C&D) Debris Ordinance

When a project is covered by the updated C&D ordinance, it must **recycle 50%** of the debris it generates. The below table shows the differences between the old requirements and the new. If a project is filed before 2011, the old requirements apply.

Effective Date	January 1, 2011 *Applies to the application filing date.*
Covered Projects	**Old:** All projects with a valuation of $250,000 or more, and all down-to-the-ground demolitions, regardless of valuation. **New:** All projects designated as "CALGreen", including, but not necessarily limited to: • New construction • First tenant improvements • Grading permits Projects with a valuation of $250,000 or more, as well as demolition, are still covered.
Materials required to be recycled	**Old:** - Scrap metal - Inert materials (dirt, soil, rocks, concrete, asphalt paving, etc.) - Corrugated cardboard - Wood pallets - Clean wood waste (unpainted, untreated lumber and plywood, etc.) **New:** 50% of all generated waste must be diverted/recycled. There is no longer a list of required materials, but recycling these types is highly recommended.
How to recycle *(unchanged)*	Mixed C&D: All debris (no wet garbage) into one bin Source-separated: separate by type
Who can haul debris *(unchanged)*	Mixed C&D: permit-holder, waste generator, franchised hauler, or City of Sacramento Source-separated: anyone
Where debris may go *(unchanged)*	Mixed C&D: SWA-certified Mixed C&D facility only Source-separated: any facility that accepts the material
Fee *(unchanged)*	0.04% of project valuation Minimum: $40 / Maximum: $800
Security Deposit *(unchanged)*	1% of project valuation (max $10,000), due with fee when applying. *Only applicable if permit applicant has been fined in past 12 months.*
Fines *(unchanged)*	If found to be non-compliance: $50-$250 for first offense $251-$500 for second offense $501-$1500 for subsequent offenses
Documentation *(unchanged)*	Permit holder must keep a waste log of all materials hauled away from project site, as well as all weight tickets of disposed and recycled material. The waste log must be submitted at the end of the project, within 30 days after permit has been finaled or expired.

Rev. 01/21/2011

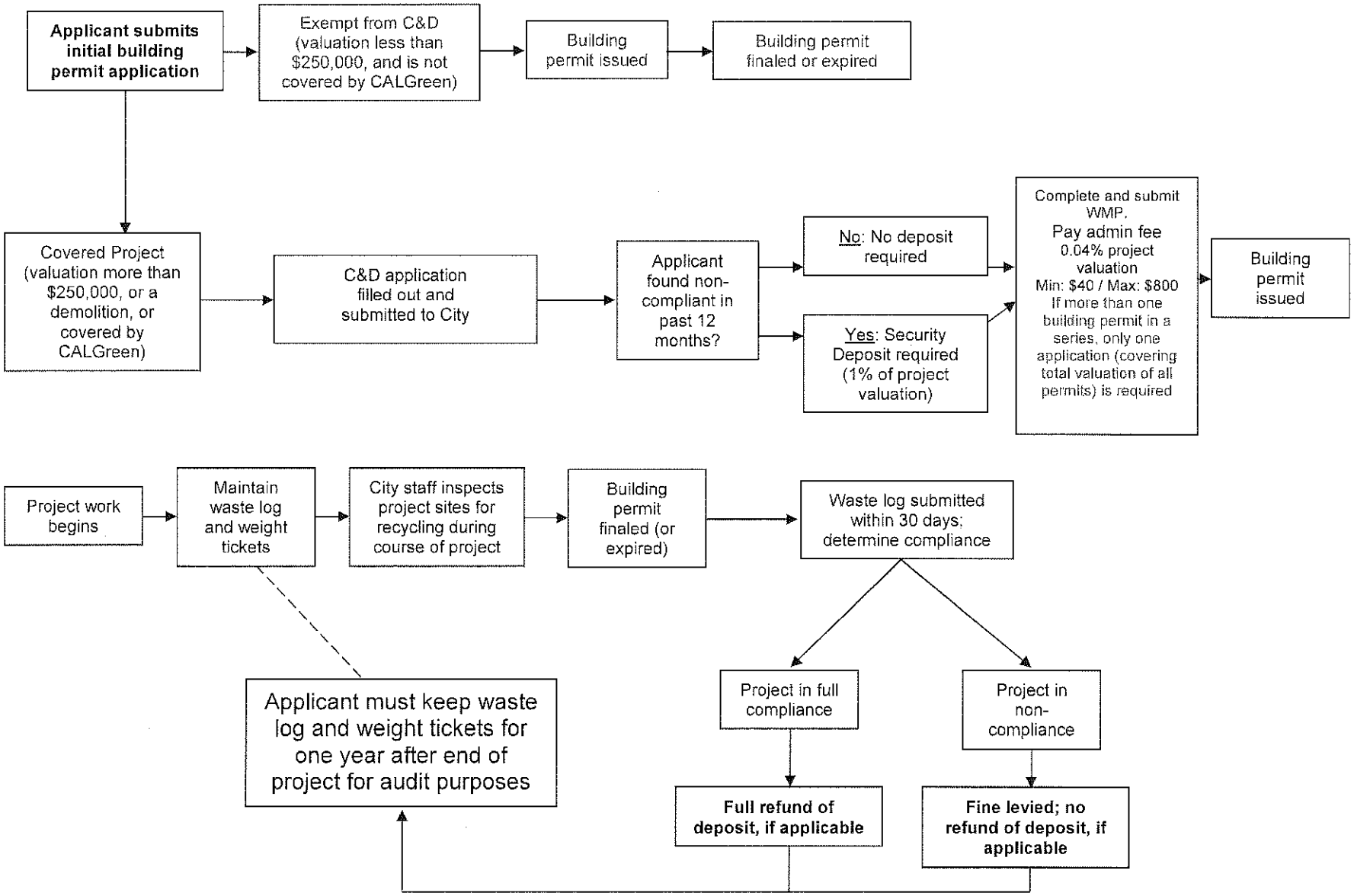
Applicant submits initial building permit application
Exempt from C&D (valuation less than $250,000, and is not covered by CALGreen)
Building permit issued
Building permit finaled or expired
Covered Project (valuation more than $250,000, or a demolition, or covered by CALGreen)
C&D application filled out and submitted to City
Applicant found non-compliant in past 12 months?
No: No deposit required
Yes: Security Deposit required (1% of project valuation)
Complete and submit WMP.
Pay admin fee
0.04% project valuation
Min: $40 / Max: $800
If more than one building permit in a series, only one application (covering total valuation of all permits) is required
Building permit issued
Project work begins
Maintain waste log and weight tickets
City staff inspects project sites for recycling during course of project
Building permit finaled (or expired)
Waste log submitted within 30 days: determine compliance
Applicant must keep waste log and weight tickets for one year after end of project for audit purposes
Project in full compliance
Project in non-compliance
Full refund of deposit, if applicable
Fine levied; no refund of deposit, if applicable

Construction & Demolition Waste Management Plan

C&D Debris Waste Management Plan
City of Sacramento Solid Waste Services
2812 Meadowview Road, Building 1
Sacramento, CA 95832
Phone: (916) 808-4839 / Fax: (916) 808-4999
C&D@cityofsacramento.org

Building Permit Numbers	*Please put all known permit numbers related to this project.*
Form submitted by:	*Please attach a business card, or put your name with a phone number and/or an email address.*

This Waste Management Plan (WMP) must be submitted and approved before your building permit(s) will be issued. Only one WMP is required if a project has multiple building permits associated to it (i.e., multiple houses in a subdivision, or multiple related permits at one address). The administration fee and security deposit (if applicable) must be submitted for this form to be approved. Administration fee is 0.04% of project valuation (min $40, max $800); security deposit is 1% of valuation (max $10,000). **The accompanying Waste Log must be submitted within 30 days of final inspection (or permit expiration) of the project, or a fine may be imposed.** Approval may also be delayed if the waste log from a previous project is due.

Building Project Information:

Job Address: _____

Contractor: _____ Phone: _____

Address: _____ Email: _____

Owner: _____ Phone: _____

Address: _____ Email: _____

Briefly describe the project:

_____

_____

Materials Required to be Recycled

50% of all debris must be recycled if generated during the course of your project. You can either **source-separate** them, which may be hauled by anyone, or mix them in one container and send the **mixed C&D debris** load to a **Certified Mixed C&D Sorting Facility**. Mixed C&D loads can only be hauled by a franchised hauler or self-hauled. Please see the Definitions section, on the next page, for more information.

50%
of all debris must be recycled

Material Management

How will C&D debris will be stored on the project site: ☐ Mixed C&D ☐ Source-Separated

Company to haul away debris: _____

Facilities to receive debris: _____

Waste Log and tickets must be submitted within 30 days of permit being finaled.

Office Use Only: Received by: _____ On date: _____

☐ Logged ☐ Approved ☐ Scanned ☐ Payment Processed ☐ Filed Fee amount: $_____

C&D Debris Waste Management Plan

C&D Debris Waste Management Plan
City of Sacramento Solid Waste Services
2812 Meadowview Road, Building 1
Sacramento, CA 95832
Phone: (916) 808-4839 / Fax: (916) 808-4999
C&D@cityofsacramento.org

Definitions.

Please read and understand these terms. Call Solid Waste at (916) 808-4833 if these terms are not clear to you. More information is also available online at http://www.cityofsacramento.org/utilities/.

1. **Self-haul or self-hauling**: This is when the permit holder, general contractor, or a subcontractor *who is doing work on the project* hauls their own waste materials for recycling or disposal. Note that a *jobsite cleanup crew is not doing other work on the project and is not self-hauling*. Jobsite cleanup crews need to be franchised in order to haul mixed C&D debris away.

2. **Franchised hauler**: See Utilities web page for a list of these haulers. These companies, and the City of Sacramento, are the only companies in Sacramento who can legally collect and haul mixed C&D debris for a fee.

3. **Source separation**: This is achieving compliance with the recycling requirement by keeping wood, metal, cardboard, or other recyclables in separate containers, and sending it to an authorized recycler. (A list of recyclers is on the Utilities web site.) Source-separated material may be hauled by anyone.

4. **Mixed C&D debris**: This is achieving compliance with the recycling requirement by putting all recyclable (and a small amount of unrecyclable) debris into one container. Mixed material must be sent to a certified mixed C&D sorting facility to have the recyclable material extracted and recovered. Mixed material also must be either self-hauled, or hauled by a franchised hauler. If your job site is crowded, this option saves the most space.

5. **Certified Mixed C&D Sorting Facility**: See the Utilities web site for a list. These facilities have been certified by the Sacramento Regional Solid Waste Authority to extract recyclable materials from mixed C&D debris. If you achieve compliance by mixed recovery, your debris must go to a certified mixed sorting facility.

Terms and Conditions

- Your approved Waste Management Plan and Waste Log must be kept on the job site in the permit folder for the duration of the project.
- City of Sacramento staff may enter the jobsite to inspect waste collection areas.
- Only SWA-Certified Mixed C&D Sorting Facilities may be used to recycle these materials if mixed with other materials.
- Only SWA-Franchised Haulers or self-haulers (as defined above) may collect and transport trash or mixed C&D material from the jobsite.
- Construction and Demolition Debris may not be burned or dumped illegally.
- Your Waste Log must be completed and submitted within 30 days of your permit being finaled or expired. All waste hauling and disposal or recycling activity must be entered on the Waste Log, including information from any subcontractors who self-hauled their own debris off-site. *Enter your Permit Number on your Waste Log now!*
- You must keep all receipts or weight-tickets from your project for a period of one year from the submittal of your waste log.
- Failure to comply with these terms and conditions may result in a fine and a security deposit on future projects.

C&D Debris Waste Log

C&D Debris Waste Management Plan
City of Sacramento Solid Waste Services
2812 Meadowview Road, Building 1
Sacramento, CA 95832
Phone: (916) 808-4839 / Fax: (916) 808-4999
C&D@cityofsacramento.org

Building Permit Numbers: _____

Please put all known permit numbers related to this project.

This waste log must be submitted to Solid Waste within 30 days of the building permit being finaled (or expired). This waste log, and the supporting weight tickets, must also be kept on file for one year after project completion.

Date	Hauler	Material	Destination	Weight*

Hauler: Indicate the Franchisee, Self-Hauler, City of Sacramento, or other hauler who removed the material offsite.
Material: Indicate appropriate category: Scrap Metal, Inert Materials, Cardboard, Wooden Pallets, or Clean Wood Waste.
Destination: Indicate the facility that received the material for disposal or recycling
*** Weight**: Indicate the weight. If weight is not known, put volume. Example: "3.2 tons" – or – "10 yards"

Office Use Only: Received by: _____ On date: _____

☐ Logged ☐ Approved ☐ Scanned ☐ Filed Total Diversion: _____%

Search

Home
About the SWA
Board of Directors
Franchised Haulers
Solid Waste Facilities
C&D Debris Sorting Facilities
Business Recycling
Multi-Family Recycling
Report Early Morning Noise
Enforcement Issues
SWA Code
More links...
Sacramento
GreenCycle

Some files require the free Adobe Reader for viewing. Click the button below to download the reader.

Get Adobe Reader

Certified Construction and Demolition (C&D) Debris Sorting Facilities

Solid Waste Facilities in the SWA region are governed by Title III of the SWA Code. Title III authorizes a voluntary program for C&D facilities. With a sorting and recycling program for mixed C&D materials, facilities can be certified. Builders who are required to recycle by City or County ordinance can comply by sending mixed loads of C&D to these facilities. It is an easier way for builders to recycle if their job-site is too crowded for multiple bins or if they have other reasons why mixed recycling is preferable to source separating their wood, metal and cardboard.

Administrative Rule 2009-01 designates recyclables for extraction from mixed C&D debris by SWA-certified C&D sorting facilities.

Administrative Rule 2009-02 identifies source-separated recyclable materials that will be excluded from a SWA-certified C&D sorting facility's performance calculation.

Download the Application for Certification

The following facilities have been certified as C&D Debris Sorting Facilities:

Allied Waste / Elder Creek Transfer and Recovery
8642 Elder Creek Road, Sacramento
916-387-8425
Also provides jobsite debris hauling service

Florin-Perkins Public Disposal
4201 Florin Perkins Road, Sacramento
916-443-5120
Also arranges jobsite debris hauling service

L&D Landfill
8635 Fruitridge Road, Sacramento
916-737-8640
For jobsite debris hauling service: Atlas Disposal 916-455-2800

Waste Management / K&M Recycle America
3562 Ramona Ave, Sacramento
916-452-0142
Must call first to make arrangements
For jobsite debris hauling service: Waste Management 916-294-4045

For more information about the SWA, email SWAInfo@SacCounty.net.

© Copyright | Privacy Policy | Conditions of Use | Accessibility Policy
Availability of Information (Alternate Formats)

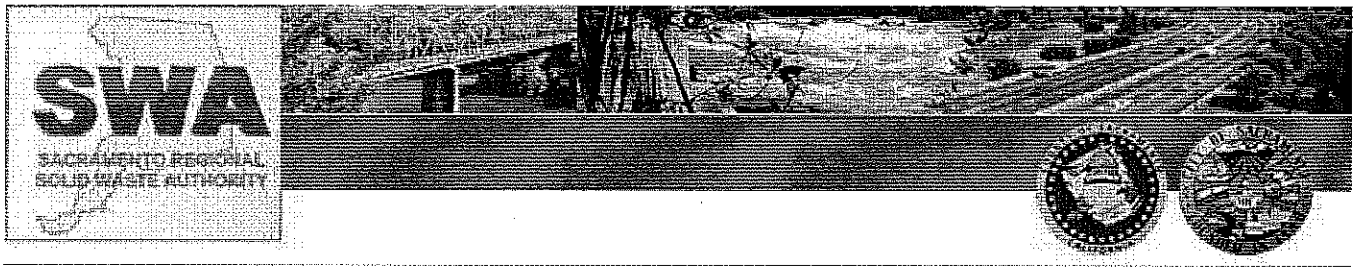

Solid Waste Facilities

The following solid waste facilities are located within the SWA Region – City of Sacramento and the unincorporated area of Sacramento County.

Elder Creek
8642 Elder Creek Road
Sacramento, CA
916-387-8425
Hours
Open
Monday - Friday
8:00 am - 3:00 pm
Closed Saturday & Sunday

Kiefer Landfill
12701 Kiefer Blvd.
Sloughhouse, CA
916-875-5555
Hours
Open seven days per week
Monday - Friday
6:30 am - 4:00 pm
Saturday & Sunday
8:30 am - 4:30 pm

L & D Landfill
8635 Fruitridge Road
Sacramento, CA
916-383-9420
Hours
Open
Monday - Friday
6:30 am - 4:00 pm
Saturday
8:00 am - 1:00 pm
Closed Sunday

North Area Recovery Station (NARS)
4450 Roseville Road
North Highlands, CA
916-875-5555
Hours
Open seven days per week
Monday - Friday
6:30 am - 6:00 pm
Saturday & Sunday
8:00 am - 6:00 pm

Sacramento Recycling & Transfer Station
8491 Fruitridge Road
Sacramento, CA
916-379-0500
Hours
Open
Monday - Saturday
8:00 am - 5:00 pm
Closed Sunday

Waste Management Recycle America
3562 Ramona Avenue
Sacramento, CA
916-452-0142
Hours
Open
Monday - Friday
7:00 am - 5:00 pm
Closed Saturday & Sunday

For more information about the SWA, email SWAInfo@SacCounty.net.

© Copyright | Privacy Policy | Conditions of Use | Accessibility Policy
Availability of Information (Alternate Formats)

Search

Home
About the SWA
Board of Directors
Franchised Haulers
Solid Waste Facilities
C&D Debris Sorting Facilities
Business Recycling
Multi-Family Recycling
Report Early Morning Noise
Enforcement Issues
SWA Code
More links...
Sacramento
GreenCycle

Some files require the free Adobe Reader to view. Click the button below to download the reader.

Get Adobe Reader

SWA Recycling Services

Subscribe to a recycling service from the Franchised Hauler list or Authorized Recycler list below.

The following is the current list of Franchised Haulers and Authorized Recyclers permitted to provide services in the SWA Region, which consists of unincorporated Sacramento County and the City of Sacramento. Franchised Haulers provide waste and recycling services while Authorized Recyclers provide recycling services only.

Franchised Haulers	Phone number
AAA Services	916-568-3456
Aces Waste Service, Inc.	866-488-8837
Advance Disposal, Inc.	888-468-8728
Allied Waste Services	916-631-0600
All Waste Systems, Inc.	916-456-1555
Atlas Disposal Industries, LLC	916-455-2800
California Waste Recovery Systems	916-441-1985
Central Valley Waste Services	209-369-8274
Elk Grove Waste Management, LLC	916-689-4052
Mapa Industries, Inc.	916-452-9003
Mini Drops, Inc	916-776-1499
North West Recyclers	916-686-8575
Recology Auburn Placer	916-381-5300
Waste Management of Sacramento	916-387-1400
Waste Removal & Recycling	916-453-1400
Western Strategic Materials, Inc	916-388-1076

Authorized Recycler	Phone number
AAA Services	916-568-3456
A & J Recycling	916-962-3762
C & C Paper Recycling	916-920-2673
California Electronic Asset Recovery	916-388-1777
International Paper	916-371-4634
Modern Waste Solutions	916-339-3676
Recycling Industries, Inc.	916-452-3961
Sacramento Regional Conservation Corps	916-386-8394
Smurfit-Stone Container Corporation	916-381-3340
Southside Art Center	916-387-8080
Stay Safe Shred and Recycle	916-640-1300

The City of Sacramento also provides waste and recycling services within the City's

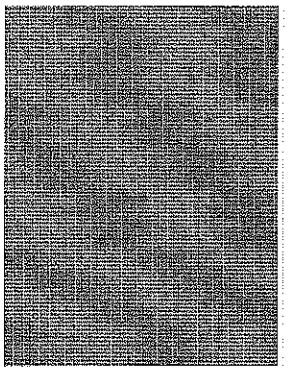

limits. Please contact the City of Sacramento Solid Waste Division at 916-808-4937 for more information. Please continue to check this website for the most current information about Franchised Haulers and Authorized Recyclers.

If you are interested in becoming an Authorized Recycler, please download the Authorized Recycler Certificate Of Operation Application and Insurance Requirements.

Download the Business Recycling Program Booklet to learn more about the business recycling program requirements. For more information about Business Recycling, email SWABusinessRecycling@SacCounty.net.

For more information about the SWA, email SWAInfo@SacCounty.net.

© Copyright | Privacy Policy | Conditions of Use | Accessibility Policy
Availability of Information (Alternate Formats)

C&D Debris Recyclers Database

C&D Recycling Facilities

Search Criteria:

- Material Type: (All)
- County: Sacramento

Number of facilities found: 32

New Search

Facility Name	City
A-1 Metals	Rio Linda
Allied Waste Transfer Station	Sacramento
AMS (Sacramento)	Sacramento
Bell Marine Co.	Sacramento
Consolidated Pallet Co., Inc.	Sacramento
Crete Crush, LLC	Rancho Cordova
Crete Crush, LLC Bradshaw Yard	Sacramento
Elder Creek Transfer & Recovery	Sacramento
five star aggregates inc	elk grove
Golden State Crushing	Sacramento
Granite Construction - Bradshaw Aggregates	Sacramento
Granite Construction - Elkhorn Plant	Rio Linda
Granite Construction Company (Sacramento)	Sacramento
Habitat For Humanity - Sacramento	Sacramento
Jose Luis Pallets	Sacramento
Kelly-Moore Paint Co.	Sacramento
Kiefer Landfill c/o Sacramento County, Dept of Waste Mgt & Recycling	Sloughhouse
L and D Landfill	Sacramento
North Area Recovery Station-Recycling Area	North Highlands
Ruland's-used Office Furniture	Sacramento

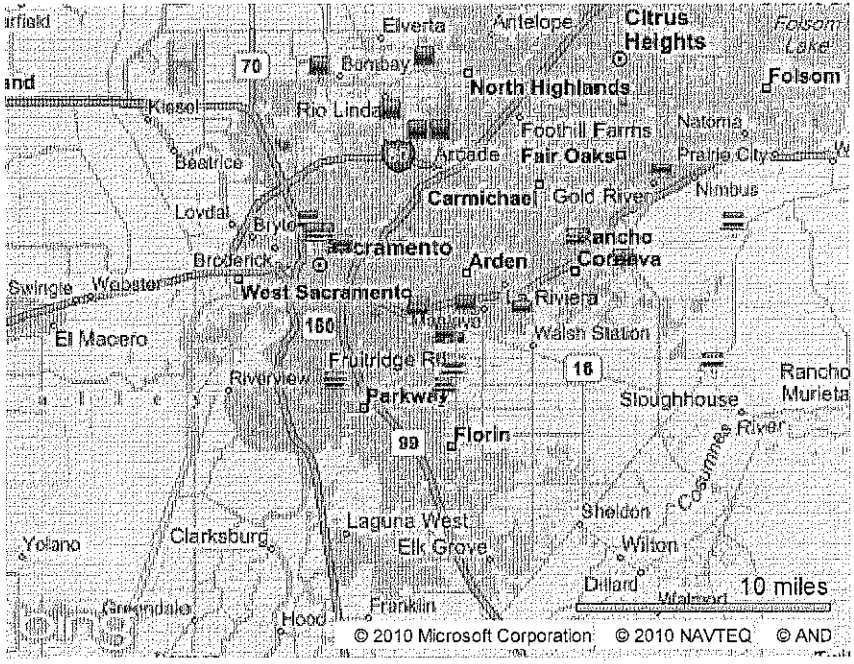

Rustic Brick & Stone Company	Sacramento
Sacramento Recycling and Transfer Station	Sacramento
Schnitzer Steel	Rancho Cordova
Schnitzer Steel-Sacramento	Rancho Cordova
SIMS METAL-Rancho Cordova	Rancho Cordova
SIMS METAL-Sacramento	Sacramento
Smurf-it Stone	Sacramento
Teichert Aggregates-Perkins	Sacramento
Teichert Aggregates-Prairie City	Rancho Cordova
The City of Sacramento PHHWCF	Sacramento
Visions Recycling, Inc.	McClellan
Waste Management Recycle America LLC	Sacramento

New Search

Last Updated: Data updated continuously.
Construction & Demolition Debris Recycling, http://www.calrecycle.ca.gov/ConDemo/
C&D Program Staff, condemo@calrecycle.ca.gov (916) 341-6489

Conditions of Use | Privacy Policy
©1995, 2011 California Department of Resources Recycling and Recovery (CalRecycle). All rights reserved.