Meeting Date: **1/28/2014**

Report Type: Consent

Report ID: 2014-00038

City of SACRAMENTO 07

City Council Report
915 I Street, 1st Floor
www.CityofSacramento.org

Title: Contract Award: P/Q Alley Sewer and Water Replacement, 16th to 17th Street Project (PN: X14010000) (Continued from 01/14/2014)

Location: District 4

Issue: This project replaces sewer and water mains that have exceeded their useful life.

Recommendation: Pass a Resolution 1) approving the contract plans and specifications for the Project, and awarding the contract to Navajo Pipelines, Inc., for an amount not to exceed $131,243.44, and 2) authorizing the City Manager or City Manager's designee to transfer $95,000 from the Residential Water Metering Program (Z14010000) to provide funding for the water main replacement included in the Project.

Contact: Bill Busath, Engineering Manager, (916) 808-1434; Brett Grant, Supervising Engineer, (916) 808-1413, Department of Utilities

Presenter: None

Department: Department Of Utilities

Division: Cip Engineering

Dept ID: 14001321

Attachments:

1-Description/Analysis

2-Background

3-Location Map

4-Resolution

5-Contract Documents

City Attorney Review

Approved as to Form
Joe Robinson
1/2/2014 3:28:59 PM

City Treasurer Review

Reviewed for Impact on Cash and Debt
John Colville
12/26/2013 3:03:59 PM

Approvals/Acknowledgements

Department Director or Designee: Dave Brent - 12/31/2013 9:12:29 AM

Back to Report Table of Contents

Description/Analysis

Issue Detail: Consistent with the criteria set forth in the Department of Utilities' Capital Improvement Programming Guide, the existing 8-inch diameter vitrified clay sewer pipe and 8-inch diameter cast iron water pipe in P/Q Alley 16th to 17th Street have failed and replacement is necessary. As part of this project, sewer services and existing manholes will be replaced.

Policy Considerations: The requested action is in conformance with City Code Chapter 3.60, Articles I and III, which provide for the award of competitively bid contracts to the lowest responsible bidder.

Economic Impacts: This infrastructure repair project is expected to create 0.52 total jobs (0.32 direct jobs and 0.20 jobs through indirect and induced activities) and create $80,977 in total economic output ($51,016 of direct output and another $29,961 of output through indirect and induced activities).

The indicated economic impacts are estimates calculated using a calculation tool developed by the Center for Strategic Economic Research (CSER). CSER utilized the IMPLAN input-output model (2009 coefficients) to quantify the economic impacts of a hypothetical $1 million of spending in various construction categories within the City of Sacramento in an average one-year period. Actual impacts could differ significantly from the estimates and neither the City of Sacramento nor CSER shall be held responsible for consequences resulting from such differences.

Environmental Considerations: The Community Development Department, Environmental Planning Services Division, has reviewed the proposed project and determined that it is categorically exempt from the provisions of the California Environmental Quality Act (CEQA) under the CEQA Guidelines Class 2, Section number 15302. The project consists of the replacement of deteriorating existing water and sewer pipes and other related utility structures where the new structures will be located on the same site as the structures replaced and will have substantially the same purpose and capacity as the structures replaced.

Sustainability: The project is consistent with the City's Sustainability Master Plan and sustainability targets as it will reduce sanitary sewer outflows. The project also improves system reliability, which will reduce energy-intensive maintenance efforts.

Commission/Committee Action: Not applicable

Rationale for Recommendation: The project was formally advertised to solicit public bids, and nine bids were received and opened by the City Clerk on December 11, 2013. The low bidder was CSI Engineering, submitting a bid of $129,351.49. The request for bids included a requirement to submit documentation of performing at least one similar water main project within the last 5 years. CSI Engineering is a new firm and did not provide this documentation; however, City staff's initial bid analysis determined that CSI Engineering's bid met the purpose of this provision and was responsive, because the

owner of CSI Engineering fulfilled the prior experience requirement as a partner in a different firm that performed similar water main projects for the City in the past. After receiving a complaint from another bidder, City staff conducted a further review that determined this experience did not occur within the last 5 years, as required by the bid specifications. For this reason, staff considers the CSI Engineering bid to be nonresponsive, and is recommending award of this project to Navajo Pipelines, Inc., which submitted the second low bid in the amount of $131,243.44, as the lowest responsive and responsible bidder.

Financial Considerations: The total estimated project cost including design, construction, inspection, and contingency is estimated to be $195,000 for the P/Q Alley Sewer & Water Replacement 16th to 17th Street (X14010000). There will be sufficient funds in the project after the completion of the transfer in the amount of $95,000 from the Residential Water Metering Program (Z14010000, Water Revenue Bonds Ser. 2013, fund 6310) for the project.

Back to Report Table of Contents

Background

The pipeline segments to be replaced by this project provide sewer and water services to a residential and commercial area. Closed Circuit Television inspection report revealed a deteriorated combined sewer pipe with heavy grease buildup and a flat bottom manhole at the upstream end of main. The existing water main was evaluated and determined to require replacement as part of this project. Consistent with the criteria set forth in the Department of Utilities' Capital Improvement Programming Guide, these sections of pipe have failed and replacement is necessary.

This project consists of replacing an 8-inch diameter sewer main with a 10-inch diameter pipe and placing a new 8-inch water main and abandoning the existing water main in place. Appurtenances including maintenance holes, drain inlets, live sewer services, and clean-outs will be replaced. Existing metered water services will be reconnected to new water main.

This project was advertised and 9 bids were received and opened on December 11, 2013. The bids are summarized below:

Contractor	**Bid Amount**
CSI Engineering*	$ 129,351.49
Navajo Pipelines Inc.	$ 131,243.44
Caggiano General Engineering, Inc.	$ 140,503.19
Florez Paving	$ 143,629.16
GM Construction & Developers, Inc.	$ 162,901.00
CE Cox General Engineering	$ 165,136.00
Cook General Engineering, Inc.	$ 167,100.00
Abide Builders Inc.	$ 209,624.00
Roger Cook Construction	$ 264.034.00

The engineer's construction estimate was $157,000.

*CSI Engineering's bid was determined to be nonresponsive because CSI Engineering does not meet the minimum experience requirement specified in the bid specifications.

Back to Report Table of Contents

LOCATION MAP

P/Q Alley Sewer & Water Main Replacement Project
Between 16th Street and 17th Street
(PN:X14010083)

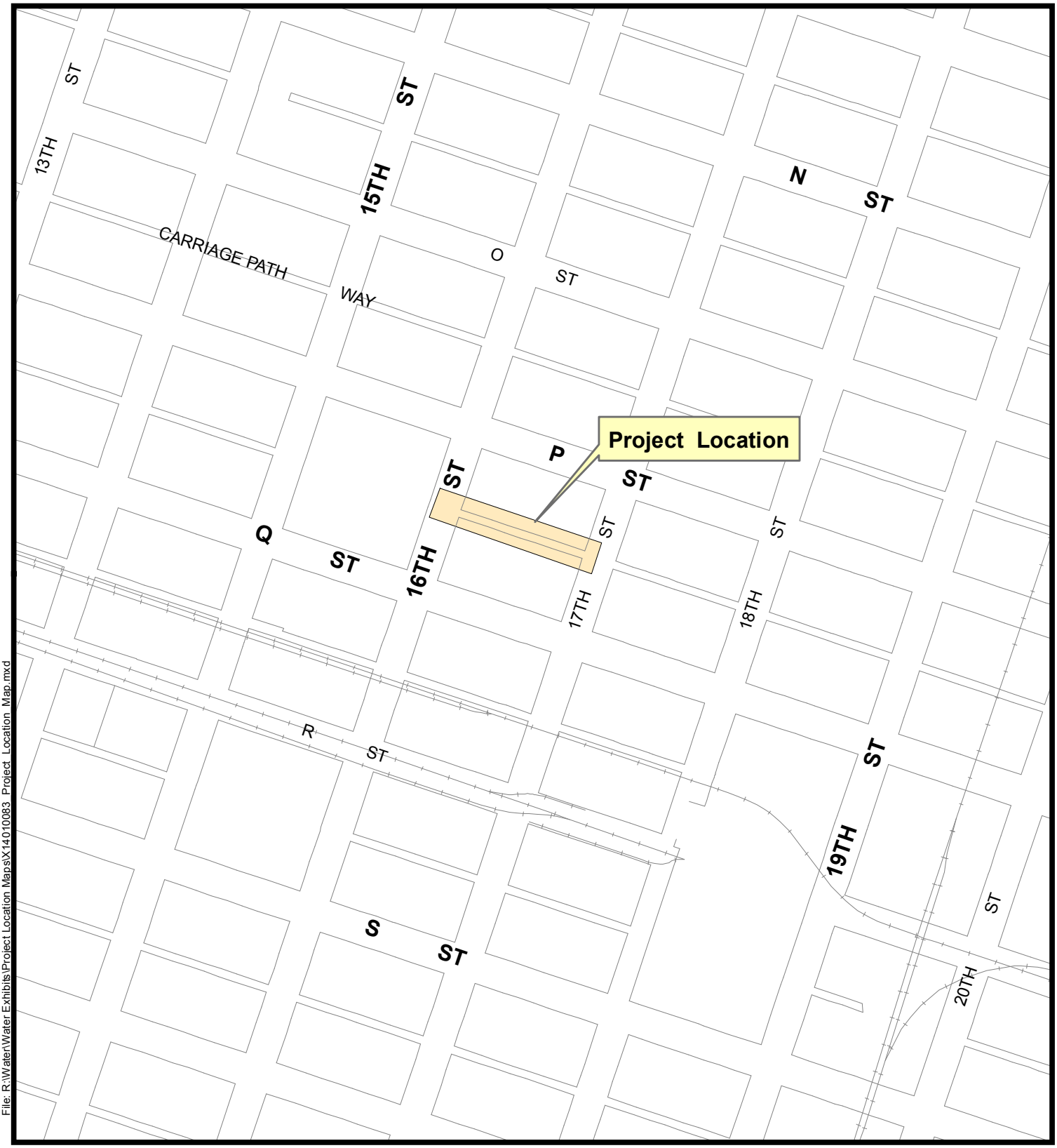

File: R:\Water\Water Exhibits\Project Location Maps\X14010083_Project_Location_Map.mxd

Map Prepared By
City of Sacramento
Department of Utilities

N

Back to Report Table of Contents

RESOLUTION NO. 2014-

Adopted by the Sacramento City Council

AWARDING CONTRACT AND AUTHORIZING BUDGET TRANSFER FOR P/Q ALLEY SEWER AND WATER REPLACEMENT, 16TH TO 17TH ST PROJECT (X14010000)

BACKGROUND

A. The sewer and water pipelines in P/Q Alley 16th to 17th Streets are in poor condition and in need of replacement.

B. City staff prepared plans and specifications for the P/Q Alley Sewer and Water Replacement 16th to 17th Street project, to replace approximately 367 linear feet of sewer pipeline and 385 linear feet of water pipeline including sewer services, drain inlets and manholes. The project was advertised and 9 bids were received on December 11, 2013.

C. The low bidder was CSI Engineering, submitting a bid of $129,351.49. However, CSI Engineering's bid does not meet the minimum experience requirement specified for water main construction in the request for bids. The owner of CSI Engineering has sufficient experience constructing similar water main projects as a partner with a different company, but that experience is not within the last 5 years, as required in the bid specifications. For this reason, CSI Engineering's bid is nonresponsive, and Navajo Pipelines, Inc., which submitted the second low bid in the amount of $131,243.44, is the lowest responsive and responsible bidder.

D. The total estimated project cost including design, construction, inspection, and contingency is estimated to be $195,000 for the P/Q Alley Sewer & Water Replacement 16th to 17th Street project (X14010000). There will be sufficient funds in the project after the completion of a transfer in the amount of $95,000 from the Residential Water Metering Program (Z14010000, fund 6310) to fund the water main replacement.

BASED ON THE FACTS SET FORTH IN THE BACKGROUND, THE CITY COUNCIL RESOLVES AS FOLLOWS:

Section 1. The contract plans and specifications for the P/Q Alley Sewer and Water Replacement 16th to 17th Street Project are approved, and the contract is awarded to Navajo Pipelines Inc., for an amount not to exceed $131,243.44.

Section 2. The City Manager or the City Manager's designee is authorized to transfer $95,000 from the Residential Water Metering Program (Z14010000, fund 6310) to the P/Q Alley Sewer and Water Replacement 16th to 17th Street project (X14010000).

Back to Report Table of Contents

City of SACRAMENTO
Department of Utilities

ENGINEERING SERVICES DIVISON

CONTRACT SPECIFICATIONS
FOR

P/Q ALLEY SEWER AND WATER REPLACEMENT, 16TH TO 17TH STREET

PN: X14010083

B14141321015

Engineer's Estimate: 157,000.00

For Pre-Bid Information Call:	Separate Plans
Rosa Millino Associate Engineer (916) 808-1451	Bid to be received before 2:00 PM **December 11, 2013** City Hall, Office of the City Clerk 915 I Street, 1st Floor, Room 1119 Sacramento, CA 95814

ESBE Program Goals

For information on meeting the City of Sacramento's Small Business Enterprise (SBE) and Emerging Business Enterprise (EBE) project goals, please contact Lorrie Lowry at (916) 808-5448, or visit the City of Sacramento's small business web site at: http://www.cityofsacramento.org/econdev/business-open/small-business-certification.cfm

P/Q ALLEY SEWER AND WATER REPLACEMENT, 16TH TO 17TH STREET

TABLE OF CONTENTS

INVITATION TO BID ..... Page 1 of 2

ESBD PRE-BID CONFERENCE SCHEDULE ..... Page 1 of 2

NOTICE TO CONTRACTORS ..... Page 1 of 1

PROPOSAL FORMS (To be submitted by all Bidders as the Bid Page)

Sealed Proposal ..... Page 1 of 3

Bid Proposal Guarantee ..... Page 1 of 1

Subcontractor and ESBE Participation Verification ..... Page 1 of 1

Drug-Free Workplace Policy and Affidavit ..... Page 1 of 1

Minimum Qualifications Questionnaire ..... Page 1 of 6

Requirements of the Non-Discrimination in Employee Benefits Code ..... Page 1 of 8

ESBE Requirements (City Contracts no Federal Funds Used) ..... Page 1 of 4

CONTRACT FORMS (Only for successful Bidder)

Worker's Compensation Insurance Certification ..... Page 1 of 1

Agreement ..... Page 1 of 16

Bonds ..... Page 1 of 6

- Performance Bond
- Payment Bond
-

CALIFORNIA LABOR CODE RELATING TO APPRENTICES ..... Page 1 of 1

TAX FORMS (REQUIRED UPON AWARD)

W-9 ..... Page 1 of 1

CA Form 590 ..... Page 1 of 1

SPECIAL PROVISIONS

ESBD INFORMATION

The City of Sacramento's Emerging and Small Business Development (ESBD) program establishes an annual emerging and small business enterprise (ESBE) participation goal for City contracts, and authorizes City departments to require minimum ESBE participation levels in individual contracts. Under City Code section 3.60.270, all bidding contractors must meet or exceed participation goals established for this project in order to qualify as a responsible bidder.

For information on meeting the City of Sacramento's Small Business Enterprise (SBE) and Emerging Business Enterprise (EBE) project goals, please contact Lorrie Lowry at (916) 808-5448, or visit the City of Sacramento's small business web site at:
http://www.cityofsacramento.org/econdev/business-open/small-business-certification.cfm

NOTICE TO CONTRACTORS

CITY OF SACRAMENTO

Sealed Proposals will be received by the City Clerk of the City of Sacramento at the Office of the City Clerk, City Hall, located at 915 I Street, 1st Floor, Room 1119, up to the hour of 2:00 p.m. on **December 11, 2013** and opened at 2:00 p.m. **December 11, 2013**, or as soon thereafter as business allows, in the Hearing Room, 2nd Floor Room, in Historic City Hall, for construction of:

P/Q ALLEY SEWER AND WATER REPLACEMENT, 16TH TO 17TH STREET

(PN: X14010083) (B14141321015)

as set forth in the Construction Documents.

Proposals received and work performed thereunder shall comply with the requirement of Chapter 3 of the Sacramento City Code. Each Bid Proposal shall be accompanied by bid security of at least 10% of the sum the Bid Proposal. The right to reject proposals or to waive any error or omission in any Bid Proposal received is reserved by the City. Signed proposals shall be submitted on the printed forms contained herein and enclosed in an envelope marked:

SEALED PROPOSAL FOR
P/Q ALLEY SEWER AND WATER REPLACEMENT, 16TH TO 17TH STREET
(PN: X14010083**) (B14141321015)**

EBE AND SBE CERTIFICATION ARE DUE BY THE CLOSE OF BUSINESS TWO DAYS AFTER BID OPENING to:
Rosa Millino, Department of Utilities, Engineering Services Division
1395 35th Avenue, Sacramento, CA 95822
Phone: (916) 808-1451 / Fax: (916) 808-1497/ Email:RMillino@cityofsacramento.org
Failure to submit the required ESBE information may be grounds for finding the bid non-responsive.

You can view and download the plans and Contract Documents from:

PLANET BIDS
http://www.planetbids.com/portal/portal.cfm?CompanyID=15300#

Subcontractors shall comply with the rates of wages currently established by the Director of Industrial Relations under provisions of Sections 1773 of the Labor Code of the State of California, a copy of which is on file in the office of the City Clerk. In accordance with Sacramento City Code Section 3.60.180 and Section 1771.5 of the California Labor Code, the payment of the general prevailing rate of per diem wages or the general prevailing rate of per diem wages for holiday and overtime is not required for any Public Construction project of $25,000 or less, or Public Maintenance project of $15,000 or less. The City of Sacramento has an approved Labor Compliance Program. **The City uses an electronic system for the submission of Labor Compliance Reports, which became effective May 1, 2007.** Each contractor and every lower-tier subcontractor submits certified payrolls and labor compliance documentation electronically at the discretion of and in the manner specified by the City of Sacramento.

Electronic submittal is via a web-based system, accessed on the World Wide Web by a web browser. Each contractor and subcontractor is given a Log On identification and password to access the City of Sacramento's reporting system.

Use of the system may entail additional data entry of weekly payroll information including; employee identification, labor classification, total hours worked and hours worked on this project, wage and benefit rates paid, etc. The contractor's payroll and accounting software might be capable of generating a 'comma delimited file' that will interface with the software.

Disseminate these provisions to every lower-tier subcontractor and vendor required to provide labor compliance documentation.

All questions regarding this Labor Compliance Program should be directed to the department's contracts staff or Contracts Services at (916) 808-5524.

Pursuant to Sacramento City Code Section 3.60.250, any Agreement awarded pursuant to this Invitation to Bid shall contain a provision permitting the substitution of securities for any monies withheld to ensure performance under the Agreement. The terms of such provisions shall be according to the requirements and the form required by the City.

Bid protests must be filled and maintained in accordance with the provisions of Sections 3.60.460 through 3.60.560 of the Sacramento City Code. Bid protests that do not comply with Sections 3.60.460 through 3.60.560 of the Sacramento City Code shall be invalid and shall not be considered. A bid protest fee of $750.00 is required at the time of filing to be considered valid in accordance with City of Sacramento Resolution No. 2003-231 dated April 29, 2003. As used herein, the term "bid protest" includes any bid protest that (1) claims that one or more bidders on this contract should be disqualified or rejected for any reason, or (2) contests a City staff recommendation to award this contract to a particular bidder, or (3) contests a City staff recommendation to disqualify or reject one or more bidders on this contract. A copy of Sections 3.60.460 through 3.60.560 of the Sacramento City Code may be obtained from the Project Manager, or from the City Clerk, located at 915 I Street, 1st Floor, Sacramento, CA 95814.

THE FOLLOWING DOCUMENTS

ARE TO BE COMPLETED AND

SUBMITTED WITH THE BID PACKAGE

Contractor's Name: _____
(Please print)

CITY OF SACRAMENTO
SEALED PROPOSAL
(MUST BE SIGNED BY BIDDER)

The Sealed Proposal will be received not later than **December 11, 2013**, at the Office of the City Clerk, New City Hall, at 915 I Street, 1st Floor, Room 1119, Sacramento, California and opened at 2:00 PM, or as soon thereafter as business allows, on **December 11, 2013**, by the Office of the City Clerk, 915 I Street, City Hall, Closed Session Room # CH1104, Sacramento, California.

TO THE HONORABLE CITY COUNCIL:

The undersigned hereby proposes and agrees to furnish any and all required labor, material, transportation, and services for

P/Q ALLEY SEWER AND WATER REPLACEMENT, 16TH TO 17TH STREET
(PN: X14010083) (B14141321015)

in the City and County of Sacramento, California.

TOTAL BID: _____ ($_____).

The work herein described is to be performed in strict conformity with the Plans, City of Sacramento Standard Specifications (Resolution No. 89-216) and these Special Provisions, all as on file in the Office of the City Clerk, at the following unit prices.

Item No.	Description	Estimated Quantity	Unit	Unit Price	Total
1	Preconstruction Photographs	1	LS	$_____	$_____
2	8-Inch Sewer Pipe to Remove 10-inch Pipe to Place	367	LF	$_____	$_____
3	Manhole to Remove and Manhole No. 3 to Construct	2	EA	$_____	$_____
4	Existing Sewer Service to Replace	17	EA	$_____	$_____
5	8-Inch Diameter Water Main to Furnish and Install	385	LF	$_____	$_____
6	8-Inch Diameter Gate Valve to Furnish and Install	3	EA	$_____	$_____
7	Reconnecting Existing Metered Water Service	16	EA	$_____	$_____
8	CCTV Inspection	367	LF	$_____	$_____
9	Connection to Existing Water Distribution System	2	EA	$_____	$_____
10	Unsuitable Material, Removal and Replacement	97	TON	$_____	$_____
11	Pipe Ends to Plug	15	EA	$_____	$_____
12	Modified Type B Drain Inlet to Construct	2	EA	$_____	$_____
13	10-inch Drain Lead to Install	51	LF	$_____	$_____

TOTAL BID: $_____

If awarded the contract, the undersigned shall execute said contract and furnish the necessary bonds within ten (10) days after the notice of award of said contract and begin work within fifteen (15) days after the signing of the contract by the Contractor and the City or the Notice to Proceed has been prepared, whichever is applicable.

In determining the amount bid by each bidder, City shall disregard mathematical errors in addition, subtraction, multiplication and division that appear obvious on the face of the Proposal. When such a mathematical error appears on the Proposal, the City shall have the right to correct such error and to compute the total amount bid by said bidder on the basis of the corrected figure or figures.

When the unit price of an item is required to be set forth in the Proposal, and the total for the item set forth separately does not agree with a figure derived by multiplying the item unit price times the Engineer's estimate of the quantity of work to be performed for said item, the item unit price shall prevail over the sum set forth as the total for the item unless, in the sole discretion of the City, such a procedure would be inconsistent with the policy of the City's bidding procedures. The total paid for each such item of work shall be based upon the item unit price and not the total price.

Should the Proposal contain only a total price for an item and the item unit price is omitted, the City shall determine the item unit price by dividing the total price of the item by the Engineer's estimate of the quantity of work to be performed for the item of work.

If the Proposal contains neither the item price nor the total price for the item, then it shall be deemed incomplete and the Proposal shall be disregarded.

It is understood that this bid is based upon completion of the work within a period **of forty-five (45) working days** commencing on the date specified in the Notice to Proceed.

The amount of liquidated damages to be paid by the Contractor for failure to complete the work by the completion date (as extended, if applicable) shall be **seven hundred dollars ($700.00) <u>for each calendar day</u>**, continuing to the time at which the work is completed. Such amount is the actual cash value agreed upon as the loss to the City resulting from the default of the Contractor.

The undersigned represents and warrants that he/she has examined the location of the proposed work and is familiar with the conditions at the place where the work is to be done. The undersigned further represents that he/she has reviewed and understands the Plans, Special Provisions, and other contract documents, and the undersigned is satisfied with all conditions for the performance of the work. **Additionally, the undersigned shall include written documentation with the Sealed Proposal of previous satisfactory experience in installation of water main pipeline, in accordance with the following:**

- **The undersigned shall provide documentation for a minimum of one (1) project of similar size and scope for the placement of water main pipeline. The work shall have been performed by the undersigned for a municipality or other public agency within the last five years. The documentation for each project shall describe the work performed, including the size, the contract amount and duration, and the time period of performance, and shall include the name, address and telephone number of the owner agency or municipality. The documentation also shall include the name of a contact person for each owner who is familiar with the work performed. The above documentation shall be included with the Sealed Proposal.**

- **A Sealed Proposal that does not include the above required documentation may be rejected as non-responsive.**

Please note that information included in the above documentation and/or obtained from such other owner agency or municipality or from another source regarding the bidder's performance on another public project also may be used by the City in determining whether the bidder is a responsible bidder**.**

The undersigned has carefully checked all of the above figures and understands that the City of Sacramento will not be responsible for any errors or omissions on the part of the undersigned in making up this bid.

This proposal shall not be withdrawn for the time periods specified in Section 3-2 of the City of Sacramento Standard Specifications for award of contract to respective low bidders. This proposal is submitted in accordance with Chapter 3.60 of the Sacramento City Code and Sections 1, 2, and 3 of the City of Sacramento Standard Specifications.

In accordance with Standard Specification Section 3-2, the City shall award this contract to the lowest responsible bidder, if such award is made, within forty-five (45) working days after opening of the Proposals. The City reserves the right to reject any and all bids.

BID DEPOSIT ENCLOSED IN THE FOLLOWING FORM:

$_____not less than ten (10) percent of amount bid.

____CERTIFIED CHECK

____MONEY ORDER

____CASHIERS'S CHECK

____BID BOND

FOR CITY USE ONLY

TYPE OF DEPOSIT

- ☐ Bid Bond
- ☐ Cashier/Certified Check
- ☐ Other_____

Reviewer's Initials: _____

CONTRACTOR

Addendum No. 1 _____ _____

Addendum No. 2 _____ By:_____
(Signature)

Addendum No. 3 _____ Title:_____

Addendum No. 4 _____ Address:_____
No PO Box – Physical Address ONLY

_____
City STATE ZIIP Code

Telephone No. _____

Fax No. _____

Email _____

(Federal Tax ID # or Social Security #)
Under penalty of perjury, I certify that the Taxpayer Identification Number and all other information provided here are correct.

_____

Valid Contractor's License No. _____, Classification _____ is held by the bidder.

Expiration date _____. Representation made herein are true and correct under penalty or perjury

PN: X14010083 (B14141321015)

KNOW ALL MEN BY THESE PRESENTS,

That we, _____

as Principal, and _____

a corporation duly organized under the laws of the State of _____and duly licensed to become sole surety on bonds required or authorized by the State of California, as Surety, are held and firmly bound unto the City of Sacramento, hereinafter called the City, in the penal sum of ten percent (10%) of the (BASE OR LUMP SUM) Proposal of the Principal above named, or other amount as set forth in the Invitation to Bidders, submitted by said Principal to the City for the Work described below, for the payment of which sum in lawful money of the United States, well and truly to be made, we bind ourselves, our heirs, executors, administrators and successors, jointly and severally, firmly by these presents.

THE CONDITION OF THIS OBLIGATION IS SUCH

That whereas the Principal has submitted the above mentioned proposal to the City, for which Proposals are to be opened in the Office of the City Clerk, City Hall, Closed Session Room #CH1104, 915 I Street, Sacramento, California, on **December 11, 2013**, for the Work specifically described as follows:

P/Q ALLEY SEWER AND WATER REPLACEMENT, 16TH TO 17TH STREET
(PN: X14010083) (B14141321015)

NOW, THEREFORE, if the aforesaid Principal is award the Agreement and within the time and manner required under the Contract Documents, enters into a written Agreement, in the prescribed form, in accordance with the Proposal, and files two (2) bonds with the City, one to guarantee faithful performance and the other to guarantee payment for labor and materials, and files the required insurance policies with the City, all as required by the Contract Documents or by law, then the obligation shall be null and void; otherwise it shall be and remain in full force and effect.

In the event suit is brought upon this bond by the Obligee and judgment is recovered, the Surety shall pay all costs incurred by the Obligee in such suit, including a reasonable attorney's fee to be fixed by the court, which sums shall be additional to the principal amount of this bond.

IN WITNESS THEREOF, We have hereunto set our hands and seal this _____day of _____, 2013.

_____
PRINCIPAL Seal

By: _____

_____
Title

_____
SURETY Seal

By _____

_____
Title

_____
Agent Name and Address

_____

_____
Agent Phone #

_____
Surety Phone #

_____
California License #

CITY OF SACRAMENTO SUBCONTRACTOR AND ESBE PARTICIPATION VERIFICATION

To be eligible for award of this contract, the bidder shall list any business entity used to attain the ESBD goal. Additionally, all other subcontractors who perform work, labor or render service in an amount in excess of one-half (0.5) of one percent of the total bid amount shall be listed. In the case of bids for the construction of streets and highways, including bridges, subcontractors whose subcontracted value exceeds one-half (0.5) percent of one percent of the total bid or ten thousand dollars ($10,000), whichever is greater, shall be listed. Estimated dollar values shall be provided for all work/services listed. The inclusion of false information will render the bid non-responsive. READ THE ABOVE REQUIREMENT CAREFULLY.

Name of Prime Contractor:		*Total Estimated Bid Amount:*	$	*DATE:*
Business Entity or Subcontractor Name and **Location**	Indicate EBE or SBE ****(subject to verification)**	Items of work and/or Description of Work or Service Subcontracted or Materials to be provided to complete contract		Estimated Dollar Value of Work/Service Provided

*****CERTIFICATION STATEMENTS ARE DUE BY THE CLOSE OF BUSINESS TWO DAYS AFTER BID OPENING***

FM 440 (Rev 2/25/04) **COPY AND ATTACH ADDITIONAL SHEETS AS NECESSARY** Page __ of __

DRUG-FREE WORKPLACE POLICY AND AFFIDAVIT

BID MAY BE DECLARED NONRESPONSIVE IF THIS FORM (COMPLETED) IS NOT ATTACHED.
Pursuant to City Council Resolution CC90-498 dated 6/26/90 the following is required.

The undersigned contractor certifies that it and all subcontractors performing under this contract will provide a drug-free workplace by:

1. Publishing a "Drug-Free Workplace" statement notifying employees that the unlawful manufacture, distribution, dispensing, possession or use of a controlled substance is prohibited in the contractor's workplace and specifying the actions that will be taken against employees for violations of such prohibition.

2. Establishing a Drug-Free Awareness Program to inform employees about:

   a. The dangers of drug abuse in the workplace.
   b. The contractor's policy of maintaining a drug-free workplace.
   c. Any available drug counseling, rehabilitation, and employee assistance program.
   d. The penalties that may be imposed upon employees for drug abuse violations occurring in the workplace.

3. Notify employees that as a condition of employment under this contract, employees will be expected to:

   a. Abide by the terms of the statement.
   b. Notify the employer of any criminal drug statute conviction for a violation occurring in the workplace.

4. Making it a requirement that each employee to be engaged in the performance of the contract be given a copy on the "Drug-Free Workplace" statement.

5. Taking one of the following appropriate actions, within thirty (30) days of receiving notice from an employee or otherwise receiving such notice, that said employee has received a drug conviction for a violation occurring in the workplace:

   a. Taking appropriate disciplinary action against such an employee, up to and including termination; or
   b. Requiring such employee to participate satisfactorily in a drug abuse assistance or rehabilitation program approved for such purposes by a federal, state, or local health, law enforcement or other appropriate agency.

* I certify that no person employed by this company, corporation, or business has been convicted of any criminal drug statute violation on any job site or project where this company, corporation, or business was performing work within three years of the date of my signature below.

EXCEPTION:

_____

Date Violation Type Place of Occurrence

If additional space is required use back of this form.

*The above statement will also be incorporated as a part of each subcontract agreement for any and all subcontractors selected for performance on this project.

IN THE EVENT THIS COMPANY, CORPORATION, OR BUSINESS IS AWARDED THIS CONSTRUCTION CONTRACT, AS A RESULT OF THIS BID; THE CONTRACTOR WITH HIS/HER SIGNATURE REPRESENTS TO THE CITY THAT THE INFORMATION DISCLOSED IN THIS DOCUMENT IS COMPLETE AND ACCURATE. IT IS UNDERSTOOD AND AGREED THAT FALSE CERTIFICATION IS SUBJECT TO IMMEDIATE TERMINATION BY THE CITY.

The Representations Made Herein On This Document Are Made Under Penalty Of Perjury.

CONTRACTOR'S NAME:_____

BY:_____Date:_____

Signature Title

Effects of violations: a. Suspension of payments under this contract. b. Suspension or termination of the contract. c. Suspension or debarment of the contractor from receiving any contract from the City of Sacramento for a period not to exceed five years.
FM 681 7/10/9

MINIMUM QUALIFICATIONS QUESTIONNAIRE

Sacramento City Code Section 3.60.020 authorizes the Sacramento City Council to adopt standard minimum qualifications for bidders on competitively bid public works construction projects, and requires, among other provisions, that a bidder meet such minimum qualifications at the time of bid opening in order to bid. On July 31, 2007, the City Council adopted Resolution No. 2007-574 establishing these standard minimum qualifications. Pursuant to City Code section 3.60.020, a bidder failing to meet these minimum qualifications at the time of bid opening shall not be considered a responsible bidder for purposes of bidding on the subject project.

All bidders must demonstrate compliance with the minimum qualifications established by Resolution No. 2007-574 by completing all of the questions contained in this questionnaire. Bidder responses shall be limited to those operating business units, offices, branches and/or subsidiary divisions of the bidder that will be involved with the performance of any project work if awarded the contract. If a bidder answers "yes" to any single question, fails to submit a fully completed questionnaire, or submits false information, this will result in a determination that the minimum qualifications are not met, and the bidder shall not be considered a qualified bidder for purposes of bidding on this contract. If two or more entities submit a bid on a contract as a Joint Venture, each entity within the Joint Venture must separately meet these minimum qualifications for the Joint Venture to be considered a qualified bidder.

The City of Sacramento ("City") shall make its determination on the basis of the submitted questionnaire, as well as any relevant information that is obtained from others or as a result of investigation by the City. While it is the intent of this questionnaire to assist the City in determining whether bidders possess the minimum qualifications necessary to submit bids on the City's competitively bid public works construction contracts, the fact that a bidder submits a questionnaire demonstrating that it meets these minimum qualifications shall not in any way limit or affect the City's ability to: (1) review other information contained in the bid submitted by the bidder, and additional relevant information, and determine whether the contractor is a responsive and/or responsible bidder; or (2) establish pre-qualification requirements for a specific contract or contracts.

By submitting this questionnaire, the bidder consents to the disclosure of its questionnaire answers: (i) to third parties for purposes of verification and investigation; (ii) in connection with any protest, challenge or appeal of any action taken by the City; and (iii) as required by any law or regulation, including without limitation the California Public Records Act (Calif. Gov't Code sections 6250 et seq.). Each questionnaire must be signed under penalty of perjury in the manner designated at the end of the form, by an individual who has the legal authority to bind the bidder submitting the questionnaire. If any information provided by a bidder becomes inaccurate, the bidder shall immediately notify the City and provide updated accurate information in writing, under penalty of perjury.

QUESTIONNAIRE

NOTICE: **For firms that maintain other operating business units, offices, branches and/or subsidiary divisions that will not be involved with the performance of any project work if the firm is awarded the contract, references hereafter to "your firm" shall mean only those operating business units, offices, branches and/or subsidiary divisions that will be involved with the performance of any project work.**

All of the following questions regarding "your firm" refer to the firm (corporation, partnership or sole proprietor) submitting this questionnaire, as well as any firm(s) with which any of your firm's owners, officers, or partners are or have been associated as an owner, officer, partner or similar position within the last five years

The firm submitting this questionnaire shall not be considered a responsible bidder if the answer to any of these questions is "yes", or if the firm submits a questionnaire that is not fully completed or contains false information.

1. **Classification & Expiration Date(s) of California** Contractor's License Number(s) held by firm:

   _____

2. Has a contractor's license held by your firm and/or any owner, officer or partner of your firm been revoked at anytime in the last five years?

   ☐ Yes ☐ No

3. Within the last five years, has a surety firm completed a contract on your firm's behalf, or paid for completion of a contract to which your firm was a party, because your firm was considered to be in default or was terminated for cause by the project owner?

   ☐ Yes ☐ No

4. At the time of submitting this minimum qualifications questionnaire, is your firm ineligible to bid on or be awarded a public works contract, or perform as a subcontractor on a public works contract, pursuant to either California Labor Code section 1777.1 (prevailing wage violations) or Labor Code section 1777.7 (apprenticeship violations)?

   ☐ Yes ☐ No

5. At any time during the last five years, has your firm, or any of its owners, officers or partners been convicted of a crime involving the awarding of a contract for a government construction project, or the bidding or performance of a government contract?

   ☐ Yes ☐ No

6. Answer either subsection A or B, as applicable:

A. Your firm has completed three or more government construction contracts in Sacramento County within the last five years: Within those five years, has your firm been assessed liquidated damages on three or more government construction contracts in Sacramento County for failure to complete contract work on time?

NOTE: If there is a pending administrative or court action challenging the assessment of liquidated damages on a government contract within the last five years, you need not include that contract in responding to this question.

☐ Yes ☐ No ☐ Not applicable

OR

B. Your firm has not completed at least three government construction contracts in Sacramento County within the last five years: Within the last three years, has your firm been assessed liquidated damages on three or more government construction contracts for failure to complete contract work on time?

NOTE: If there is a pending administrative or court action challenging an assessment of liquidated damages on a government contract within the last three years, you need not include that contract in responding to this question.

☐ Yes ☐ No ☐ Not applicable

7. In the last three years has your firm been debarred from bidding on, or completing, any government agency or public works construction contract for any reason?

NOTE: If there is a pending administrative or court action challenging a debarment, you need not include that debarment in responding to this question.

☐ Yes ☐ No

8. Has CAL OSHA assessed a total of three or more penalties against your firm for any "serious" or "willful" violation occurring on construction projects performed in Sacramento County at any time within the last three years?

NOTE: If there is a pending administrative or court action appealing a penalty assessment, you need not include that penalty assessment in responding to this question.

☐ Yes ☐ No

9. Answer <u>either</u> subsection A or B, as preferred:

A. In the last three years has your firm had a three year average Workers' Compensation experience modification rate exceeding 1.1?

☐ Yes ☐ No

OR

B. In the last three years has your firm had a three-year average incident rate for total lost workday cases exceeding 10?

NOTE: Incident rates represent the number of lost workday cases per 100 full-time workers and is to be calculated as: (N/EH) x 200,000, where

N	**=**	**number of lost workday cases (as defined by the U.S. Dept. of Labor, Bureau of Labor Statistics)**
EH	**=**	**total hours worked by all employees during the calendar year**
200,000	**=**	**base for 100 equivalent full-time working (working 40 hours per week, 50 weeks per year)**

☐ Yes ☐ No

10. In the past three years, has the federal EPA, Region IX or a California Air Quality Management District or Regional Water Quality Control Board assessed penalties three or more times, either against your firm, or against the project owner for a violation resulting in whole or in part from any action or omission by your firm on a project on which your firm was a contractor in Sacramento County?

NOTE: If there is a pending administrative or court action appealing a penalty assessment, you need not include that penalty assessment in responding to this question.

☐ Yes ☐ No

11. In the past three years, has the federal EPA, Region IX or a California Air Quality Management District or Regional Water Quality Control Board assessed a single penalty of $100,000 or more, either against your firm, or against the project owner for a violation resulting in whole or in part from any action or omission by your firm on a project on which your firm was the contractor in Sacramento County?

NOTE: If there is a pending administrative or court action appealing a penalty assessment, you need not include that penalty assessment in responding to this question.

☐ Yes ☐ No

12. In the past three years, have civil penalties been assessed against your firm pursuant to California Labor Code 1777.7 for violation of California public works apprenticeship requirements, three or more times?

NOTE: If there is a pending administrative or court action appealing a penalty assessment, you need not include that penalty assessment in responding to this question.

☐ Yes ☐ No

13. In the past three years, has a public agency in California withheld contract payments or assessed penalties against your firm for violation of public works prevailing wage requirements, three or more times?

NOTE: If there is a pending administrative or court action appealing a withholding or penalty assessment, you need not include that withholding or penalty assessment in responding to this question.

☐ Yes ☐ No

14. Has your firm been assessed penalties for violation of public works prevailing wage requirements in California, in an aggregate amount for the past three years of $50,000 or more?

NOTE: If there is a pending administrative or court action appealing a penalty assessment, you need not include that penalty assessment in responding to this question.

☐ Yes ☐ No

VERIFICATION AND SIGNATURE

I, the undersigned, certify and declare that I have read all the foregoing answers to this Minimum Qualifications Questionnaire, and know their contents. The matters stated in these Questionnaire answers are true of my own knowledge and belief, except as to those matters stated on information and belief, and as to those matters I believe them to be true. I declare under penalty of perjury under the laws of the State of California that the foregoing is true and correct.

Signed at _____, on _____.
(Location) (Date)

Signature: _____

Print name: _____

Title: _____

NOTE: If two or more entities submit a bid on a contract as a Joint Venture, each entity within the Joint Venture must submit a separate Minimum Qualifications Questionnaire.

REQUIREMENTS OF THE NON-DISCRIMINATION IN EMPLOYEE BENEFITS CODE

INTRODUCTION

The Sacramento Non-Discrimination In Employee Benefits Code (the "Ordinance"), codified as Sacramento City Code Chapter 3.54, prohibits City contractors from discriminating in the provision of employee benefits between employees with spouses and employees with domestic partners, and between the spouses and domestic partners of employees.

APPLICATION

The provisions of the Ordinance apply to any contract or agreement (as defined below), between a Contractor and the City of Sacramento, in an amount exceeding $100,000.00. The Ordinance applies to that portion of a contractor's operations that occur: (i) within the City of Sacramento; (ii) on real property outside the City of Sacramento if the property is owned by the City or if the City has a right to occupy the property; or (iii) at any location where a significant amount of work related to a City contract is being performed.

The Ordinance does not apply: to subcontractors or subcontracts of any Contractor or contractors; to transactions entered into pursuant to cooperative purchasing agreements approved by the Sacramento City Council; to legal contracts of other governmental jurisdictions or public agencies without separate competitive bidding by the City; where the requirements of the ordinance will violate or are inconsistent with the terms or conditions of a grant, subvention or agreement with a public agency or the instructions of an authorized representative of any such agency with respect to any such grant, subvention or agreement; to permits for excavation or street construction; or to agreements for the use of City right-of-way where a contracting utility has the power of eminent domain.

DEFINITIONS

As set forth in the Ordinance, the following definitions apply:

"Contract" means an agreement for public works or improvements to be performed, or for goods or services to be purchased or grants to be provided, at the expense of the City or to be paid out of moneys deposited in the treasury or out of the trust money under the control or collected by the City. "Contract" also means a written agreement for the exclusive use ("exclusive use" means the right to use or occupy real property to the exclusion of others, other than the right reserved by the fee owner) or occupancy of real property for a term exceeding 29 days in any calendar year, whether by singular or cumulative instrument, (i) for the operation or use by others of real property owned or controlled by the City for the operation of a business, social, or other establishment or organization, including leases, concessions, franchises and easements, or (ii) for the City's use or occupancy of real property owned by others, including leases, concessions, franchises and easements.

"Contract" shall not include: a revocable at-will use or encroachment permit for the use of or encroachment on City property regardless of the ultimate duration of such permit; excavation, street construction or street use permits; agreements for the use of City right-of-way where a contracting utility has the power of eminent domain; or agreements governing the use of City property that constitute a public forum for activities that are primarily for the purpose of espousing or advocating causes or ideas and that are generally protected by the First Amendment to the United States Constitution or that are primarily recreational in nature.

“Contractor” means any person or persons, firm partnership or corporation, company, or combination thereof, that enters into a Contract with the City. “Contractor” does not include a public entity.

“Domestic Partner” means any person who has a currently registered domestic partnership with a governmental entity pursuant to state or local law authorizing the registration.

“Employee Benefits” means bereavement leave; disability, life, and other types of insurance; family medical leave; health benefits; membership or membership discounts; moving expenses; pension and retirement benefits; vacation; travel benefits; and any other benefit given to employees. “Employee benefits” shall not include benefits to the extent that the application of the requirements of this chapter to such benefits may be preempted by federal or state.

CONTRACTOR’S OBLIGATION TO PROVIDE THE CITY WITH DOCUMENTATION AND INFORMATION

Contractor shall provide the City with documentation and information verifying its compliance with the requirements of the Ordinance within ten (10) days of receipt of a request from the City. Contractors shall keep accurate payroll records, showing, for each City Contract, the employee’s name, address, Social Security number, work classification, straight time pay rate, overtime pay rate, overtime hours worked, status and exemptions, and benefits for each day and pay period that the employee works on the City Contract. Each request for payroll records shall be accompanied by an affidavit to be completed and returned by the Contractor, as stated, attesting that the information contained in the payroll records is true and correct, and that the Contractor has complied with the requirements of the Ordinance. A violation of the Ordinance or noncompliance with the requirements of the Ordinance shall constitute a breach of contract.

EMPLOYER COMPLIANCE CERTIFICATE AND NOTICE REQUIREMENTS

(a) All contractors seeking a Contract subject to the Ordinance shall submit a completed Declaration of Compliance Form (attachment “A”), signed by an authorized representative, with each proposal, bid or application. The Declaration of Compliance shall be made a part of the executed contract, and will be made available for public inspection and copying during regular business hours.

(b) The Contractor shall give each existing employee working directing on a City contract, and (at the time of hire), each new employee, a copy of the notification provided as attachment “B.”

(c) Contractor shall post, in a place visible to all employees, a copy of the notice provided as attachment “C.”

DECLARATION OF COMPLIANCE
Equal Benefits Ordinance

_____
Name of Contractor

_____
Address

The above named contractor ("Contractor") hereby declares and agrees as follows:

1. I have read and understand the Requirements of the Non-Discrimination In Employee Benefits Code (the "Requirements") provided to me by the City of Sacramento ("City") in connection with the City's request for proposals or other solicitations for the performance of services, or for the provision of commodities, under a City contract or agreement ("Contract").

2. As a condition of receiving the City Contract, I agree to fully comply with the Requirements, as well as any additional requirements that may be specified in the City's Non-Discrimination in Employee Benefits Code codified at Chapter 3.54 of the Sacramento City Code (the "Ordinance").

3. I understand, to the extent that such benefits are not preempted or prohibited by federal or state law, employee benefits covered by the Ordinance, are any of the following:

   a. Bereavement Leave
   b. Disability, life, and other types of insurance
   c. Family medical leave
   d. Health benefits
   e. Membership or membership discounts
   f. Moving expenses
   g. Pension and retirement benefits
   h. Vacation
   i. Travel benefits
   j. Any other benefit offered to employees

   I agree that should I offer any of the above listed employee benefits, that I will offer those benefits, without discrimination between employees with spouses and employees with domestic partners, and without discrimination between the spouses and domestic partners of such employees.

4. I understand that I will not be considered to be discriminating in the provision or application of employee benefits under the following conditions or circumstances:

   a. In the event that the actual cost of providing a benefit to a domestic partner or spouse, exceeds the cost of providing the same benefit to a spouse or domestic partner of an employee, I will not be required to provide the benefit, nor shall it be deemed discriminatory, if I require the employee to pay the monetary difference in order to provide the benefit to the domestic partner or to the spouse.

   b. In the event I am unable to provide a certain benefit, despite taking reasonable measures to do so, if I provide the employee with a cash equivalent, I will not be deemed to be discriminating in the application of that benefit.

   c. If I provide employee benefits neither to employee's spouses nor to employee's domestic partners.

   d. If I provide employee benefits to employees on a basis unrelated to marital or domestic partner status.

   e. If I submit, to the Program Coordinator, written evidence of making reasonable efforts to end discrimination in employee benefits by implementing policies which are to be enacted before the

first effective date after the first open enrollment process following the date the Contract is executed with the City.

I understand that any delay in the implementation of such policies may not exceed one (1) year from the date the Contract is executed with the City, and applies only to those employee benefits for which an open enrollment process is applicable.

f. Until administrative steps can be taken to incorporate, in the infrastructure, nondiscrimination in employee benefits

The time allotted for these administrative steps will apply only to those employee benefits for which administrative steps are necessary and may not exceed three (3) months from the date the Contract is executed with the City.

g. Until the expiration of a current collective bargaining agreement(s) where, in fact, employee benefits are governed by a collective bargaining agreement(s).

h. I take all reasonable measures to end discrimination in employee benefits by either requesting the union(s) involved agree to reopen the agreement(s) in order for me to take whatever steps are necessary to end discrimination in employee benefits or by my ending discrimination in employee benefits without reopening the collective bargaining agreement(s).

i. In the event I cannot end discrimination in employee benefits despite taking all reasonable measures to do so, I provide a cash equivalent to eligible employees for whom employee benefits (as listed previously), are not available.

Unless otherwise authorized in writing by the City Manager, I understand this cash equivalent must begin at the time the union(s) refuse to allow the collective bargaining agreement(s) to be reopened or no longer than three (3) months from the date the Contract is executed with the City.

5. I understand that failure to comply with the provisions of Section 4. (a) through 4. (i), above, will subject me to possible suspension and/or termination of this Contract for cause; repayment of any or all of the Contract amount disbursed by the City; debarment for future contracts until all penalties and restitution have been paid in full; deemed ineligible for future contracts for up to two (2) years; the imposition of a penalty, payable to the City, in the sum of $50.00 for each employee, for each calendar day during which the employee was discriminated against in violation of the provisions of the Ordinance.

6. I understand and do hereby agree to provide each current employee and, within ten (10) days of hire, each new employee, of their rights under the Ordinance. I further agree to maintain a copy of each such letter provided, in an appropriate file for possible inspection by an authorized representative of the City. I also agree to prominently display a poster informing each employee of these rights.

7. I understand that I have the right to request an exemption to the benefit provisions of the Ordinance when such a request is submitted to the Procurement Services Division, in writing with sufficient justification for resolution, prior to contract award.

I further understand that the City may request a waiver or exemption to the provisions or requirements of the Ordinance, when only one contractor is available to enter into a contract or agreement to occupy and use City property on terms and conditions established by the City; when sole source conditions exist for goods, services, public project or improvements and related construction services; when there are no responsive bidders to the Ordinance requirements and the contract is for essential goods or services; when emergency conditions with public health and safety implications exist; or when the contract is for specialized legal services if in the best interest of the City.

8. In consideration of the foregoing, I shall defend, indemnify and hold harmless, the City, its officers and employees, against any claims, actions, damages, costs (including reasonable attorney fees), or other liabilities of any kind arising from any violation of the Requirements or of the Ordinance by me.

I declare under penalty of perjury under the laws of the State of California that the foregoing is true and correct, and that I am authorized to bind the Contractor to the provisions of this Declaration.

_____ _____

Signature of Authorized Representative Date

_____

Print Name

_____

Title

YOUR RIGHTS UNDER THE CITY OF SACRAMENTO'S

NON-DISCRIMINATION IN EMPLOYEE BENEFITS BY CITY CONTRACTORS ORDINANCE

On …….. (date), your employer (the "Employer") entered into a contract with the City of Sacramento (the "City") for …….. (contract details), and as a condition of that contract, agreed to abide by the requirements of the City's Non-Discrimination In Employee Benefits By City Contractors Ordinance (Sacramento City Code Section 3.54).

The Ordinance does not require the Employer to provide employee benefits. The Ordinance does require that if certain employee benefits are provided by the Employer, that those benefits be provided without discrimination between employees with spouses and employees with domestic partners, and without discrimination between the spouse or domestic partner of employees.

The Ordinance covers any employee working on the specific contract referenced above, but only for the period of time while those employees are actually working on this specific contract.

The included employee benefits are:

- Bereavement leave
- Disability, life and other types of insurance
- Family medical leave
- Health benefits
- Membership or membership discounts
- Moving expenses
- Pension and retirement benefits
- Vacation
- Travel benefits
- Any other benefits given to employees

(Employee Benefits does not include benefits that may be preempted by federal or state law.)

If you feel you have been discriminated or retaliated against by your employer in the terms and conditions of your application for employment, or in your employment, or in the application of these employee benefits, because of your status as an applicant or as an employee protected by the Ordinance, or because you reported a violation of the Ordinance, and after having exhausted all remedies with your employer,

You May . . .

- Submit a written complaint to the City of Sacramento, Contract Services Unit, containing the details of the alleged violation. The address is:

  City of Sacramento
  Contract Services Unit
  915 I St., 2nd Floor
  Sacramento, CA 95814

- Bring an action in the appropriate division of the Superior Court of the State of California against the Employer and obtain the following remedies:

  - Reinstatement, injunctive relief, compensatory damages and punitive damages

  - Reasonable attorney's fees and costs

YOUR RIGHTS UNDER THE CITY OF SACRAMENTO'S

NON-DISCRIMINATION IN EMPLOYEE BENEFITS BY CITY CONTRACTORS ORDINANCE

If your employer provides employee benefits, they must be provided to those employees working on a City of Sacramento contract without discriminating between employees with spouses and employees with domestic partners.

The included employee benefits are:

- Bereavement leave
- Disability, life and other types of insurance
- Family medical leave
- Health benefits
- Membership or membership discounts
- Moving expenses
- Pension and retirement benefits
- Vacation
- Travel benefits
- Any other benefits given to employees

If you feel you have been discriminated against by your employer . . .

You May . . .

- Submit a written complaint to the City of Sacramento, Contract Services Unit, containing the details of the alleged violation. The address is:

  City of Sacramento
  Contract Services Unit
  915 I St., 2nd Floor
  Sacramento, CA 95814

- Bring an action in the appropriate division of the Superior Court of the State of California against the employer and obtain reinstatement, injunctive relief, compensatory damages, punitive damages and reasonable attorney's fees and costs.

Discrimination and Retaliation Prohibited.

If you feel you have been discriminated or retaliated against by your employer in the terms and conditions of your application for employment, or in your employment, because of your status as an applicant or as an employee protected by the Ordinance, or because you reported a violation of this Ordinance . . .

You May Also . . .

Submit a written complaint to the City of Sacramento, Contract Services Unit, at the same address, containing the details of the alleged violation.

ESBE REQUIREMENTS

(City Construction Contracts no Federal Funds Used)

I. ESBE PARTICIPATION REQUIREMENT

On February 9, 1999, the Sacramento City Council adopted an Emerging and Small Business Development (ESBD) program to provide enhanced opportunities for the participation of small business enterprises (SBEs) and emerging business enterprises (EBEs) in the City's contracting and procurement activities. The ESBD program establishes an annual emerging and small business enterprise (ESBE) participation goal for City contracts, and authorizes City departments to require minimum ESBE participation levels in individual contracts so that the annual ESBE participation goal can be met. Under City Code section 3.60.270, when the bid specifications for a City contract establish a minimum participation level for ESBEs, no bidder on the contract shall be considered a responsive bidder unless its bid meets the minimum ESBE participation level required by the bid specifications.

The City has established **a minimum 20% participation level for ESBEs on this contract**. Pursuant to City code Section 3.60.270, no bidder on this contract shall be considered a responsive bidder unless its bid meets or exceeds this minimum participation level.

Bidders shall submit copies of their Certification as a SBE or EBE, and the SBE or EBE Certifications for each subcontractor, supplier, or other SBE or EBE business entity listed in the bidder's sealed proposal, within two (2) working days after being requested to do so by City. Failure to submit the requested ESBE information within this time period will be grounds for finding the bid non-responsive.

II. ESBE CERTIFICATION

A. A SBE designated in the bid must be certified as such by the State of California, Department of General Services, or by the City, prior to the time bids are received by the City.

B. An EBE designated in the bid must be certified as such by the City prior to the time bids are received by the City.

III. DETERMINATION OF ESBE PARTICIPATION LEVEL

A. ESBE Participation: The percent of ESBE participation shall be determined based on the dollar value of the work to be performed or supplies to be furnished by certified ESBEs designated in the bidder's Subcontractor and ESBE Participation Verification Form, relative to the total dollar amount of the bid.

B. Participation Credit: To receive credit for participation:(1) an ESBE subcontractor must be responsible for the execution of a distinct element of the work, must possess any license or certification required for the work, and must carry its responsibility by actually performing, managing, or supervising the work without subcontracting or otherwise shifting any portion of the work to another subcontractor; and (2) an ESBE supplier must be furnishing materials, equipment,

or supplies that the supplier sells as a recurring, although not necessarily primary, part of its business, and that are necessary for performance of the work.

C. ESBE Bidders: The dollar value listed for an ESBE bidder on the bidder's Subcontractor and ESBE Participation Verification Form shall include only the amount of work to be performed by the ESBE bidder, and shall not include any amount to be paid by the ESBE bidder for the cost of materials, equipment, or supplies.

D. Suppliers: Credit for an ESBE supplier of materials, equipment, or supplies is counted as one hundred (100) percent of the amount paid to the supplier for the material, equipment, or supplies. To receive this credit, ESBE suppliers must be listed on the bidder's Subcontractor and ESBE Participation Verification Form.

E. Subcontractors (including truckers): To receive credit for an ESBE subcontractor, the subcontractor must be listed on the bidder's Subcontractor and ESBE Participation Verification Form. The dollar value listed for a subcontractor on the bidder's Subcontractor and ESBE Participation Verification Form shall not include any amount to be paid to the subcontractor for the cost of materials, equipment, or supplies.

- Truckers: Credit for an ESBE trucker is counted as one hundred (100) percent of the amount paid to the trucker for trucking services, not including any amount paid to the trucker for the cost of any materials, equipment, or supplies being transported by the trucker.

IV. ESBE REQUIREMENTS FOR CONTRACTOR

A. ESBE Records: The Contractor shall maintain records of all subcontracts with certified ESBE subcontractors and records of materials purchased from certified ESBE suppliers for one (1) year after receiving final payment from the City. Such records shall show the name and business address of each ESBE subcontractor or supplier and the total dollar amount actually paid each ESBE subcontractor or supplier.

Not later than 30 days after completion of the work performed under the contract, a summary of these records shall be prepared, certified correct by the Contractor's authorized representative and furnished to the City. The Contractor shall provide such other information, records, reports, certifications or other documents as may be required by City, to determine compliance with any provision of the ESBD program or these specifications.

B. Performance of ESBE Subcontractors and Suppliers: The ESBEs listed by the Contractor shall perform the work and supply the materials, equipment, and supplies for which they are listed unless the Contractor has received prior written authorization from the City to perform the work with other forces or to obtain the material, equipment, or supplies from other sources. Reasons for requesting such authorization would include:

1. The listed ESBE fails to execute a written contract based upon the general terms, conditions, plans, and specifications for the project.

2. The listed ESBE becomes bankrupt or insolvent.

3. The listed ESBE subcontractor fails to meet the bond requirements of the Contractor.

4. The work performed or the materials/equipment/supplies provided by the listed ESBE are unsatisfactory or are not in accordance with the plans and specifications, or the listed ESBE fails to perform its contractual obligations.

5. It would be in the best interest of the City.

C. Subcontractor Substitution: No substitution of an ESBE subcontractor shall be made at any time without compliance with the Subletting and Subcontracting Fair Practices Act. If an ESBE subcontractor is unable to perform successfully and is to be replaced, the Contractor shall make reasonable efforts to replace the original ESBE subcontractor with another certified ESBE subcontractor. The new ESBE subcontractor must be certified at the time of substitution.

D. Reporting and Utilization Requirements and Sanctions: Failure to provide specific information, records, reports, certifications, or any other documents required for compliance with these specifications, or failure to utilize one or more ESBEs in substantial compliance with the ESBE utilization indicated in the Contractor's bid (unless otherwise authorized by City as provided herein, or when such failure results from changes to the work approved by the City), shall be considered a breach of the contract, and a deduction may be made from the contract amount. The deduction shall be not more than ten (10) percent of the value of the work or materials/equipment/supplies that the subject ESBE(s) were listed to perform/provide in the Contractor's bid, and shall be deducted from any payment due to the Contractor. This is in addition to any deduction that may be made under any other provision of the contract, the Sacramento City Code, or State law.

E. Hearing and Review of Division Manager Decision: Prior to making a deduction pursuant to Section IV(D), above, the City shall provide written notice of the proposed deduction to the Contractor, and the Contractor may, not later than five (5) working days after receiving such notice, provide a written request to City for a hearing to contest the proposed deduction. Upon receipt of a timely written request from the Contractor, the City shall schedule a hearing before the Division Manager (as defined in the City's Standard Specifications for Public Construction), and written notice of the date, time and location of the hearing shall be provided to the Contractor not less than five (5) working days prior to the date of the hearing. The hearing shall be conducted in the manner specified in Section 4-8 of the Standard Specifications, and the Division Manager shall prepare and forward to the Contractor a written decision as soon as practicable after the hearing. The Division Manager's decision shall be subject to review in accordance with the provisions of Section 4-9 of the Standard Specifications. Failure to request such review in compliance with the requirements set forth in Section 4-9 shall constitute acceptance of the Division Manager's decision by the Contractor.

The written notices and requests described above shall be provided by registered or certified mail (return receipt requested), by telecopy, by personal delivery, or by any

other method that provides reliable evidence of the date of receipt. Written notice provided by telecopy shall be deemed received on the date that it is transmitted and transmission is confirmed by the transmitting machine. Written notice provided by personal delivery shall be deemed received on the date of delivery.

V. DEFINITIONS

A. Emerging Business Enterprise (EBE): The City shall certify EBEs utilizing the small business certification criteria and standards of the State of California, General Services Department, Office of Small Business and DVBE Services, that were in effect on December 1, 1998, provided that the size standard, industry by industry, shall be set at 50% of the State small business certification criteria and standards that were in effect on December 1, 1998.

B. Small Business Enterprise (SBE): The City shall certify SBEs utilizing the current small business certification criteria and standards of the State of California, General Services Department, Office of Small Business and DVBE Services. The City will also accept State certified SBEs.

C. The small business certification criteria and standards of the State of California, General Services Department, Office of Small Business and DVBE Services shall be used only for the purpose of determining whether a firm may receive certification as an EBE or SBE.

D. Contractor: The sole proprietorship, partnership, limited liability company, corporation, or any other business entity entering into a contract with the City of Sacramento.

E. Subcontractor: The sole proprietorship, partnership, limited liability company, corporation, or other business entity entering into a contract with the prime contractor to perform a portion of the work.

F. Supplier: The sole proprietorship, partnership, limited liability company, corporation, or other business entity entering into a contract with the prime contractor to provide materials, equipment, or supplies necessary for performance of the work.

FOLLOWING FORMS TO BE FILLED OUT AND SIGNED

ONLY

IF AWARDED CONTRACT

WORKER'S COMPENSATION INSURANCE CERTIFICATION

TO THE CITY OF SACRAMENTO:

The undersigned does hereby certify that he is aware of the provisions of Section 3700 et seq. of the Labor Code which require every employer to be insured against liability for worker's compensation claims or to undertake self-insurance in accordance with the provisions of said Code, and that he/she will comply with such provisions before commencing the performance of the work on this contract.

_____
Bidder

BY: _____

Title: _____

Address: _____

_____

Date: _____

PLEASE READ CAREFULLY BEFORE SIGNING

To be signed by authorized corporate officer or partner or individual submitting the bid. If bidder is: (example)

1. An individual using a firm name, sign: "John Doe, and individual doing business as Blank Company".

2. An individual doing business under his own name, sign: Your name only.

3. A co-partnership, sign: "John Doe and Richard Doe, co-partners doing business as Blank Company, by, John Doe, Co-Partner".

4. A corporation, sign: "Blank Company, by John Doe, Secretary". (Or other title)

AGREEMENT
(Construction Contract Over $25,000)

THIS AGREEMENT, dated for identification _____, 20__, is made and entered into between the CITY OF SACRAMENTO, a municipal corporation ("City"), and _____ ("Contractor").

The City and Contractor hereby mutually agree as follows:

1. CONTRACT DOCUMENTS

The Contract Documents, sometimes also referred to as the "Contract," consist of the following items, which are hereby incorporated by reference as if set forth in full in this Agreement:

The Notice to Contractors
The Proposal Form submitted by the Contractor
The Instructions to Bidders
The Emerging and Small Business Enterprise (ESBE) Requirements
The Requirements for the Non-Discrimination in Employee Benefits by City Contractors Ordinance and the Declaration of Compliance
The City's Reference Guide for Construction Contracts
The Addenda, if any
This Agreement
The Standard Specifications
The Special Provisions
The Plans and Technical Specifications
The drawings and other data and all developments thereof prepared by City pursuant to the Contract
Any modifications of any of the foregoing made or approved by City, including but not limited to duly authorized change orders.

Unless specifically noted otherwise, references to the "Standard Specifications" shall mean and refer to the Standard Specifications for Public Construction of the City of Sacramento approved by the Sacramento City Council on June 4, 2007 (Resolution No. 2007-350), and any subsequent amendments thereto approved by the Sacramento City Council or the Sacramento City Manager. Work called for in any one Contract Document and not mentioned in another is to be performed and executed as if mentioned in all Contract Documents. The table of contents, titles and headings contained in the Contract Documents are provided solely to facilitate reference to various provisions of the Contract Documents and in no way affect or limit the interpretation of the provisions to which they refer.

2. DEFINITIONS

Unless otherwise specifically provided herein, all words and phrases defined in the Standard Specifications shall have the same meaning and intent in this Agreement.

3. AGREEMENT CONTROLS

In the event of a conflict between any of the terms and conditions set forth in this Agreement and the terms and conditions set forth in other Contract Documents, the terms and conditions set forth in this Agreement shall prevail, except that the provisions of any duly authorized change order shall prevail over any conflicting provisions of this Agreement.

4. SCOPE OF CONTRACT

Contractor agrees to furnish all tools, equipment, apparatus, facilities, labor, material and transportation necessary to perform and complete in a good and workmanlike manner to the satisfaction of City, all the Work called for in the Contract Documents entitled:

P/Q ALLEY SEWER AND WATER REPLACEMENT, 16TH TO 17TH STREET (PN: X14010083)

including the Work called for in the following alternative bid items described in the Proposal Form:

_____

Contractor agrees to perform such Work in the manner designated in and in strict conformity with the Contract Documents.

5. CONTRACT AMOUNT AND PAYMENTS

City agrees to pay and Contractor agrees to accept, as complete payment for the above Work, in accordance with the schedule and procedures set forth in the Contract Documents and subject to deductions, withholdings and additions as specified in the Contract Documents, a total sum that shall not exceed the total bid amount set forth in Contractor's Proposal Form. In addition, subject to deductions, withholdings and additions as specified in the Contract Documents, payment for individual items of the Work shall be computed as follows:

(A) For items of the Work for which a lump sum price is specified in Contractor's Proposal Form, Contractor shall be paid the lump sum price(s) specified in Contractor's Proposal Form; and

(B) For items of the Work for which a unit price is specified in Contractor's Proposal Form, Contractor shall be paid the sum computed at such unit price, or computed at a different price if such different price is determined by City in accordance with the Standard Specifications, based on the actual amount of each such item performed and/or furnished and incorporated in the Work; provided that in no event shall the total sum for a unit price item exceed the total bid amount set forth for such item in the Contractor's Proposal Form, unless authorized by Change Order.

6. PROGRESS PAYMENTS

Subject to the terms and conditions of the Contract, City shall cause payments to be made upon demand of Contractor as follows:

(A) On or about the first of the month, the Engineer shall present to the Contractor a statement showing the amount of labor and materials incorporated in the Work through the twentieth (20) calendar day of the preceding month. After both Contractor and Engineer approve the statement in writing, and the City's labor compliance officer provides written approval, the City shall issue a certificate for ninety-five (95) percent of the amount it shall find to be due, subject to any deductions or withholdings authorized or required under the Contract or any applicable Laws or Regulations.

(B) No inaccuracy or error in said monthly estimates shall operate to release Contractor from damages arising from such Work or from enforcement of each and every provision of the Contract Documents, and City shall have the right subsequently to correct any error made in any estimate for payment.

(C) Contractor shall not be paid for any defective or improper Work.

(D) The remaining five (5) percent of the value of the Work performed under the Contract, if unencumbered and subject to any deductions or withholdings authorized or required under the Contract or any applicable Laws or Regulations, shall be released not later than sixty (60) days after completion and final acceptance of the Work by City. Acceptance by Contractor of the final

payment shall constitute a waiver of all claims against the City arising under the Contract Documents, except for disputed claims in stated amounts that the Contractor specifically reserves in writing, but only to the extent that the Contractor has complied with all procedures and requirements applicable to the presentation and processing of such claim(s) under the Contract Documents. Contractor shall be entitled to substitute securities for retention or to direct that payments of retention be made into escrow, as provided in Public Contract Code Section 22300, upon execution of the City's Escrow Agreement for Security Deposits in Lieu of Retention.

(E) The parties agree that, for purposes of the timely progress payment requirements specified in Public Contract Code Section 20104.50, the date that the City receives a statement jointly approved by the Contractor and the Engineer as provided above shall be deemed to constitute the date that City receives an undisputed and properly submitted payment request from the Contractor. Progress payments not made within 30 days after this date may be subject to payment of interest as provided in Public Contract Code Section 20104.50.

7. RETENTION OF SUMS CHARGED AGAINST CONTRACTOR

When, under the provisions of this Contract or any applicable Laws or Regulations, City is authorized or required to withhold, deduct or charge any sum of money against Contractor, City may deduct and retain the amount of such charge from the amount of the next succeeding progress estimate(s), or from any other moneys due or that may become due Contractor from City. If, on completion or termination of the Contract, sums due Contractor are insufficient to pay City's charges, City shall have the right to recover the balance from Contractor or its Sureties.

8. COMMENCEMENT AND PROSECUTION OF WORK

Contractor shall commence the Work not later than fifteen (15) working days after the date of the written Notice to Proceed from City to Contractor and shall diligently prosecute the Work to final completion. The phase "commence the Work" means to engage in a continuous program on-site including, but not limited to, site clearance, grading, dredging, land filling and the fabrications, erection, or installation of the Work. The Notice to Proceed shall be issued within fifteen (15) calendar days following execution of the Agreement by the City and the filing by Contractor of the required Bonds and proof of insurance, provided that the Engineer may delay issuance of the Notice to Proceed if the Engineer determines in the Engineer's sole discretion that conditions on the site of the Work are unsuitable for commencement of the Work. After the Notice to Proceed is issued, the continuous prosecution of Work by Contractor shall be subject only to Excusable Delays as defined in this Agreement.

9. TIME OF COMPLETION

The entire Work shall be brought to completion in the manner provided for in the Contract Documents on or before **forty-five (45) working days** from the date of the Notice to Proceed (hereinafter called the "Completion Date") unless extensions of time are granted in accordance with the Contract Documents.

Failure to complete the entire Work by the Completion Date and in the manner provided for in the Contract Documents shall subject Contractor to liquidated damages as provided in this Agreement. Time is and shall be of the essence in the performance of the Contract and the Work.

10. PAYMENTS DO NOT IMPLY ACCEPTANCE OF WORK

The payment of any progress payment, or the acceptance thereof by Contractor, shall not constitute acceptance of the Work or any portion thereof and shall in no way reduce the liability of Contractor to replace unsatisfactory work or material, whether or not the unsatisfactory character of such work or material was apparent or detected at the time such payment was made.

11. ACCEPTANCE NOT RELEASE

Contractor shall correct immediately any defective or imperfect work or materials that may be discovered before final acceptance of the entire Work, whether or not such defect or imperfection was previously noticed or identified by the City. The inspection of the Work, or any part thereof, shall not relieve Contractor of any of its obligations to perform satisfactory work as herein specified.

Failure or neglect on the part of City or any of its officers, employees or authorized agents to discover, identify, condemn or reject defective or imperfect work or materials shall not be construed to imply an acceptance of such work or materials, if such defect or imperfection becomes evident at any time prior to final acceptance of the entire Work, nor shall such failure or neglect be construed as barring City from enforcing Contractor's warranty(ies) or otherwise recovering damages or such a sum of money as may be required to repair or rebuild the defective or imperfect work or materials whenever City may discover the same, subject only to any statutes of limitation that may apply to any such claim.

12. CITY'S RIGHT TO TAKE POSSESSION OF THE WORK IN WHOLE OR IN PART

The City shall have the right at any time to enter upon the Work and perform work not covered by this Contract, or to occupy and use a portion of the Work, prior to the date of the final acceptance of the Work as a whole, without in any way relieving Contractor of any obligations under this Contract.

13. NO WAIVER OF REMEDIES

Neither the inspection by City, its officers, employees or agents, nor any certificate or other approval for the payment of money, nor any payment for, nor acceptance of the whole or any part of the Work by City, nor any extensions of time, nor any position taken by City, its officers, employees or its agents shall operate as a waiver of any provision of the Contract Documents nor of any power herein reserved to City or any right to damages herein provided, nor shall any waiver of any breach of this Agreement be held to be a waiver of any other or subsequent breach. All remedies provided in the Contract Documents shall be taken and construed as cumulative; in addition to each and every other remedy herein provided, the City shall have any and all equitable and legal remedies that it would in any case have.

14. WARRANTY

Except as otherwise expressly provided in the Contract Documents, and excepting only items of routine maintenance, ordinary wear and tear and unusual abuse or neglect by City, Contractor warrants and guarantees all Work executed and all supplies, materials and devices of whatsoever nature incorporated in or attached to the Work, or otherwise provided as a part of the Work pursuant to the Contract, to be absolutely free of all defects of workmanship and materials for a period of one year after final acceptance of the entire Work by the City. Contractor shall repair or replace all work or material, together with any other work or material that may be displaced or damaged in so doing, that may prove defective in workmanship or material within this one year warranty period without expense or charge of any nature whatsoever to City.

In the event that Contractor shall fail to comply with the conditions of the foregoing warranty within ten (10) days after being notified of the defect in writing, City shall have the right, but shall not be obligated, to repair, or obtain the repair of, the defect and Contractor shall pay to City on demand all costs and expense of such repair. Notwithstanding anything herein to the contrary, in the event that any defect in workmanship or material covered by the foregoing warranty results in a condition that constitutes an immediate hazard to public health or safety, or any property interest, or any person, City shall have the right to immediately repair, or cause to be repaired, such defect, and Contractor shall pay to City on demand all costs and expense of such repair. The foregoing statement relating to hazards to

health, safety or property shall be deemed to include both temporary and permanent repairs that may be required as determined in the sole discretion and judgment of City.

In addition to the above, the Contractor shall make a written assignment of all manufacturer's and other product warranties to the City, prior to completion and final acceptance of the Work by City.

The Contractor's Performance Bond shall secure the performance of the Contractor's obligations under this Section 14, and the Contractor and its Surety shall be jointly and severally liable for these obligations.

15. LIQUIDATED DAMAGES IF WORK NOT COMPLETED ON TIME

(A) The actual fact of the occurrence of damages and the actual amount of the damages that City would suffer if the entire Work, and/or any specified portion thereof, were not completed within the time(s) specified herein are dependent upon many circumstances and conditions that could prevail in various combinations, and for this reason, it is impracticable and extremely difficult to fix the actual damages. Damages that City would suffer in the event of such delay include: loss of the use of the project; expenses of prolonged assignment to the project of an architectural and/or engineering staff; prolonged costs of administration, inspection, and supervision; increased operational expenses and/or impaired operation of other facilities dependent upon completion of the project; and the loss and inconvenience suffered by the public within the City of Sacramento by reason of the delay in the completion of the project or portion thereof. Accordingly, the parties agree, and by execution of this Agreement, Contractor acknowledges that it understands and agrees, that the amount(s) set forth herein as liquidated damages reflect the parties' best efforts at the time of entering into the Contract to estimate the damages that may be incurred by City and the public due to the Contractor's delay in completion of the Work and/or any specified portion thereof, and shall be presumed to be the amount of damages sustained by the failure of Contractor to complete the entire Work and/or any specified portion thereof within the time(s) specified herein.

(B) Contractor shall pay liquidated damages to City for failure to complete the entire Work by the Completion Date (as extended in accordance with the Contract Documents, if applicable) in the amount of **seven hundred dollars ($700.00) for each calendar day** after the Completion Date (as extended in accordance with the Contract Documents, if applicable), continuing to the time at which the entire Work is completed. Such amount is the actual cash value agreed upon by the City and Contractor as the loss to City and the public resulting from Contractor's default.

The parties agree, and by execution of this Agreement, Contractor acknowledges that it understands and agrees, that the foregoing provisions provide for the imposition of liquidated damages from the Completion Date (as extended in accordance with the Contract Documents, if applicable) until the date of completion of the entire Work as determined by the Engineer in accordance with Section 8-4 of the Standard Specifications, whether or not the Work or any portion thereof is claimed or determined to be substantially complete prior to such date of completion.

(C) In the event Contractor shall become liable for liquidated damages, City, in addition to all other remedies provided by law, shall have the right to withhold any and all payments that otherwise would be or become due Contractor until the liability of Contractor under this section is finally determined. City shall have the right to use and apply such payments, in whole or in part, to reimburse City for all liquidated damages due or to become due to City. Any remaining balance of such payments shall be paid to Contractor only after discharge in full of all liability incurred by Contractor under this section or otherwise under any provision of the Contract Documents or any applicable Law or Regulation. If the sum so retained by City is not sufficient to discharge all such liabilities of Contractor, Contractor shall continue to remain liable to City until all such liabilities are satisfied in full. No failure by City to withhold any payment as specified above shall in any manner be construed to constitute a release of any such liabilities nor a waiver of the City's right to withhold payment for such liabilities.

16. INDEMNITY AND HOLD HARMLESS

(A) Contractor shall defend, hold harmless and indemnify the City, its officers, employees, and agents, and each and every one of them, from and against any and all actions, damages, costs, liabilities, claims, demands, losses, judgments, penalties, costs and expenses of every type and description, whether arising on or off the site of the Work, including, but not limited to, any fees and/or costs reasonably incurred by City's staff attorneys or outside attorneys and any fees and expenses incurred in enforcing this provision (hereafter collectively referred to as "Liabilities"), including but not limited to Liabilities arising from personal injury or death, damage to personal, real or intellectual property or the environment, contractual or other economic damages, or regulatory penalties, arising out of or in any way connected with performance of or failure to perform the Work by the Contractor, any subcontractor or agent, anyone directly or indirectly employed by any of them or anyone for whose acts any of them may be liable, whether or not (i) such Liabilities are caused in part by a party indemnified hereunder, or (ii) such Liabilities are litigated, settled or reduced to judgment; provided that the foregoing indemnity does not apply to liability for damages for death or bodily injury to persons, injury to property, or other loss, damage or expense to the extent arising from (i) the sole negligence or willful misconduct of, or defects in design furnished by, City, its agents, servants, or independent contractors who are directly responsible to City, or (ii) the active negligence of City.

(B) The existence or acceptance by City of any of the insurance policies or coverages described in this Agreement shall not affect or limit any of City's rights under this Section 16, nor shall the limits of such insurance limit the liability of Contractor hereunder. The provisions of this Section 16 shall survive any expiration or termination of the Contract.

17. CONTRACTOR SHALL ASSUME RISKS

Until the completion and final acceptance by City of all Work under this Contract, the Work shall be under Contractor's responsible care and charge, and Contractor, at no cost to City, shall rebuild, repair, restore and make good all injuries, damages, re-erections, and repairs occasioned or rendered necessary by accidental causes of any nature, to all or any portions of the Work.

18. GENERAL LIABILITY OF CONTRACTOR

Except as otherwise herein expressly stipulated, Contractor shall perform all the Work and furnish all the labor, materials, tools, equipment, apparatus, facilities, transportation, power and light, and appliances, necessary or proper for performing and completing the Work herein required in the manner and within the time herein specified. The mention of any specific duty or liability of Contractor shall not be construed as a limitation or restriction of any general liability or duty of Contractor, and any reference to any specific duty or liability shall be construed to be solely for the purpose of explanation.

19. INSURANCE

During the entire term of this Contract and until completion and final acceptance of the Work as provided in the Contract Documents, Contractor shall maintain in full force and effect the insurance coverage described in this section.

Full compensation for all premiums that Contractor is required to pay for the insurance coverage described herein shall be included in the compensation specified for performance of the Work under the Contract. No additional compensation will be provided for Contractor's insurance premiums.

It is understood and agreed by the Contractor that its liability to the City shall not in any way be limited to or affected by the amount of insurance coverage required of or carried by the Contractor.

(A) Minimum Scope and Limits of Insurance Coverage

(1) Commercial General Liability Insurance, providing coverage at least as broad as ISO CGL Form 00 01 on an occurrence basis for bodily injury, including death, of one or more persons, property damage and personal injury, with limits of not less than one million dollars ($1,000,000) per occurrence. The policy shall provide contractual liability and products and completed operations coverage for the term of the policy.

(2) Automobile Liability Insurance providing coverage at least as broad as ISO Form CA 00 01 on an occurrence basis for bodily injury, including death, of one or more persons, property damage and personal injury, with limits of not less than one million dollars ($1,000,000) per occurrence. The policy shall provide coverage for owned, non-owned and/or hired autos as appropriate to the operations of the Contractor.

(3) Workers' Compensation Insurance with statutory limits, and Employers' Liability Insurance with limits of not less than one million dollars ($1,000,000). The Worker's Compensation policy shall include a waiver of subrogation.

(B) Additional Insured Coverage

(1) Commercial General Liability Insurance: The City, its officials, employees and volunteers shall be covered by policy terms or endorsement as additional insureds as respects general liability arising out of activities performed by or on behalf of Contractor, products and completed operations of Contractor, and premises owned, leased or used by Contractor. The general liability additional insured endorsement must be signed by an authorized representative of the insurance carrier.

If the policy includes a blanket additional insured endorsement or contractual additional insured coverage, the above signature requirement may be fulfilled by submitting that document with a signed declaration page referencing the blanket endorsement or policy form.

(2) Automobile Liability Insurance: The City, its officials, employees and volunteers shall be covered by policy terms or endorsement as additional insureds as respects auto liability.

(C) Other Insurance Provisions

The policies are to contain, or be endorsed to contain, the following provisions:

(1) Contractor's insurance coverage shall be primary insurance as respects City, its officials, employees and volunteers. Any insurance or self-insurance maintained by City, its officials, employees or volunteers shall be in excess of Contractor's insurance and shall not contribute with it.

(2) Any failure to comply with reporting provisions of the policies shall not affect coverage provided to City, its officials, employees or volunteers.

(3) Coverage shall state that Contractor's insurance shall apply separately to each insured against whom claim is made or suit is brought, except with respect to the limits of the insurer's liability.

(4) City will be provided with thirty (30) days written notice of cancellation or material change in the policy language or terms.

(D) Acceptability of Insurance

Insurance shall be placed with insurers with a Bests' rating of not less than A:V. Self-insured retentions, policy terms or other variations that do not comply with the requirements of this Section 19 must be declared to and approved by the City Risk Management Division in writing prior to execution of this Agreement.

(E) Verification of Coverage

(1) Contractor shall furnish City with certificates and required endorsements evidencing the insurance required. The certificates and endorsements shall be forwarded to the City representative designated by City. Copies of policies shall be delivered to the City on demand. Certificates of insurance shall be signed by an authorized representative of the insurance carrier.

(2) The City may withdraw its offer of contract or cancel the Contract if the certificates of insurance and endorsements required have not been provided prior to execution of this Agreement. The City may withhold payments to Contractor and/or cancel the Contract if the insurance is canceled or Contractor otherwise ceases to be insured as required herein.

(F) Subcontractors

Contractor shall require and verify that all subcontractors maintain insurance coverage that meets the minimum scope and limits of insurance coverage specified in subsection A, above.

20. FAILURE TO MAINTAIN BONDS OR INSURANCE

If, at any time during the performance of this Contract, Contractor fails to maintain any item of the bonds and/or insurance required under the Contract in full force and effect, Contractor shall immediately suspend all work under the Contract and notify City in writing of such failure. After such notice is provided, or if City discovers such failure and notifies Contractor, the City thereafter may withhold all Contract payments due or that become due until notice is received by City that such bonds and/or insurance have been restored in full force and effect and that the premiums therefor have been paid for a period satisfactory to the Division of Risk Management. Contractor shall not resume work until notified by City to do so, and the City shall have no responsibility or liability for any costs incurred by Contractor as a result of such suspension of Work.

In addition to the foregoing, any failure to maintain any item of the required bonds and/or insurance at any time during the performance of this Contract will be sufficient cause for termination of the Contract by City.

The Contractor shall be solely responsible for, and shall defend, indemnify and hold harmless the City, its officers, employees and agents against and from, any and all damages, claims, losses, actions, costs or other expenses of any kind incurred by any party as a direct or indirect result of any suspension of Work or termination of the Contract under the provisions of this Section.

21. EXCUSABLE DELAYS

For the purpose of these Contract Documents, the term "Excusable Delay" shall mean, and is limited to, delay caused directly by: acts of God; acts of a public enemy; fires; inclement weather as determined by the Engineer; riots; insurrections; epidemics; quarantine restrictions; strikes; lockouts; sitdowns; acts of a governmental agency; priorities or privileges established for the manufacture, assemble, or allotment of materials necessary in the Work by order, decree or otherwise of the United

States or by any department, bureau, commission, committee, agent, or administrator of any legally constituted public authority; changes in the Work ordered by City insofar as they necessarily require additional time in which to complete the Work; the prevention of Contractor from commencing or prosecuting the Work because of the acts of others, excepting Contractor's subcontractors or suppliers; or the prevention of Contractor from commencing or prosecuting the Work because of a Citywide failure of public utility service.

The term "Excusable Delay" shall specifically not include: (i) any delay that could have been avoided by the exercise of care, prudence, foresight and diligence on the part of Contractor; (ii) any delay in the prosecution of any part of the Work that does not constitute a Controlling Operation, whether or not such delay is unavoidable; (iii) any reasonable delay resulting from time required by City for review of any Contractor submittals and for the making of surveys, measurements and inspection; and, (iv) any delay arising from an interruption in the prosecution of the Work on account of reasonable interference by other Contractors employed by City that does not necessarily prevent the completion of the entire Work within the time specified. Excusable Delays, if any, shall operate only to extend the Completion Date (not in excess of the period of such delay as determined by City) and shall not under any circumstances increase the amount City is required to pay Contractor except as otherwise provided in these Contract Documents.

22. CONTRACTOR TO SERVE NOTICE OF DELAYS

Whenever Contractor foresees any delay in the prosecution of the Work, and in any event as soon as possible (not to exceed a period of ten (10) calendar days) after the initial occurrence of any delay that Contractor regards as or may later claim to be an Excusable Delay, the Contractor shall notify the Engineer in writing of such delay and its cause, in order that the Engineer: (i) may take immediate steps to prevent if possible the occurrence or continuance of the delay; or (ii) if this cannot be done, may determine whether the delay is to be considered excusable, how long it continues, and to what extent the prosecution and completion of the Work are delayed thereby. Said written notice shall constitute an application for an extension of time only if the notice requests such an extension and sets forth the Contractor's estimate of the additional time required together with a full description of the cause of the delay relied upon.

After the completion of any part or whole of the Work, the Engineer, in estimating the amount due Contractor, will assume that any and all delays that may have occurred in its prosecution and completion were not Excusable Delays, except for such delays for which the Contractor has provided timely written notice as required herein, and that the Engineer has found to be excusable. Contractor shall not be entitled to claim Excusable Delay for any delay for which the Contractor failed to provide such timely written notice.

23. EXTENSION OF TIME

If the Contractor complies with Section 22, above, and the Engineer finds a delay claimed by the Contractor to be an Excusable Delay, the Contractor shall be allowed an extension of time to complete the Work that is proportional to the period of Excusable Delay determined by the Engineer, subject to the approval by City of a change order granting such time extension. During a duly authorized extension for an Excusable Delay, City shall not charge liquidated damages against the Contractor for such delay.

If the City extends the time to complete the Work as provided herein, such extension shall in no way release any warranty or guarantee given by Contractor pursuant to the provisions of the Contract Documents, nor shall such extension of time relieve or release the sureties of the Bonds provided pursuant to the Contract Documents. By executing such Bonds, the Sureties shall be deemed to have expressly agreed to any such extension of time. The granting of any extension of time as provided herein shall in no way operate as a waiver on the part of City of its rights under this Contract, excepting only extension of the Completion Date for such period of Excusable Delay as may be determined by the Engineer and approved by a duly authorized change order.

24. NO PAYMENT FOR DELAYS

No damages or compensation of any kind shall be paid to Contractor or any subcontractor because of delays in the progress of the Work whether or not such delays qualify for extension of time under this Agreement; except that this provision shall not preclude the recovery of damages for a delay caused by the City that is unreasonable under the circumstances and that is not within the contemplation of the parties, provided that the Contractor timely submits all such written notice(s) and fully complies with such other procedures as may be specified in the Contract Documents or any Laws or Regulations for Contractor to claim damages for such delay.

25. CHANGES IN THE WORK

Changes in the Work authorized or directed in accordance with the Contract Documents and extensions of time of completion made necessary by reason thereof shall not in any way release any warranty or guarantee given by Contractor pursuant to the provisions of the Contract Documents, nor shall such changes in the Work relieve or release the Sureties on Bonds provided pursuant to the Contract Documents. By executing such Bonds, the Sureties shall be deemed to have expressly agreed to any such change in Work and to any extension of time made by reason thereof.

26. TERMINATION AFTER COMPLETION DATE

In addition to any other rights City may have, if any services or work required under the Contract (including but not limited to punch list items) are not completed as of the Completion Date (as adjusted by any extensions of time for Excusable Delays granted pursuant to the Contract Documents), City may terminate the Contract at any time after the Completion Date (as adjusted by any extensions of time for Excusable Delays granted pursuant to the Contract Documents), by providing a written notice to Contractor specifying the date of termination. Such notice also may specify conditions or requirements that Contractor must meet to avoid termination of the Contract on such date. If Contractor fails to fulfill all such conditions and requirements by such termination date, or, if no such conditions or requirements are specified, Contractor shall cease rendering services and performing work on such termination date, and shall not be entitled to receive any compensation for services rendered or work performed after such termination date. In the event of such termination, Contractor shall remain liable to City for liquidated damages incurred for any period of time prior to the termination date.

In addition to any other charges, withholdings or deductions authorized under the Contract or any Laws or Regulations, if City terminates the Contract pursuant to this section, City may withhold and deduct from any payment and/or retention funds otherwise due Contractor any sum necessary to pay the City's cost of completing or correcting, or contracting for the completion or correction of, any services or work under the Contract that are not completed to the satisfaction of the City or that otherwise are deficient or require correction as of such termination date, including but not limited to incomplete punch list items. Such costs shall include all of the City’s direct and indirect costs incurred to complete or correct such services or work, including the City’s administrative and overhead costs. If the amount of payment(s) and/or retention funds otherwise due the Contractor are insufficient to pay such costs, City shall have the right to recover the balance of such costs from the Contractor and/or its Surety(ies).

27. TERMINATION FOR CONVENIENCE

Upon written notice to the Contractor, the City may at any time, without cause and without prejudice to any other right or remedy of the City, elect to terminate the Contract for the convenience of City. In such case, the Contractor shall be paid (without duplication of any items, and after deduction and/or withholding of any amounts authorized to be deducted or withheld by the Contract Documents or any Laws or Regulations):

(A) For Work executed in accordance with the Contract Documents prior to the effective date of termination and determined to be acceptable by the Engineer, including fair and reasonable sums for overhead and profit on such Work;

(B) For reasonable claims, costs, losses, and damages incurred in settlement of terminated contracts with subcontractors, suppliers, and others; and

(C) For reasonable expenses directly attributable to termination.

Contractor shall not be paid for any loss of anticipated profits or revenue for any Work not performed prior to termination, nor for any economic loss arising out of or resulting from such termination, except for the payments listed in this section. Contractor's warranty under Section 14 of this Agreement shall apply, and Contractor shall remain responsible for all obligations related to such warranty, with respect to all portions of the Work performed prior to the effective date of the termination for convenience pursuant to this section. The City shall be entitled to have any or all remaining Work performed by other contractors or by any other means at any time after the effective date of a termination for convenience pursuant to this section.

28. TERMINATION FOR BREACH OF CONTRACT

If Contractor abandons the Work under this Contract, or if the Contract or any portion of the Contract is sublet or assigned without the consent of the City, or if the Engineer determines in the Engineer's sole discretion that the conditions of the Contract in respect to the rate of progress of the Work are not being fulfilled or any part thereof is unnecessarily delayed, or if Contractor violates or breaches, or fails to execute in good faith, any of the terms or conditions of the Contract, or if Contractor refuses or fails to supply enough properly skilled labor or materials or refuses or fails to make prompt payment to subcontractors for material or labor, or if Contractor disregards any Laws or Regulations or proper instruction or orders of the Engineer, then, notwithstanding any provision to the contrary herein, the City may give Contractor and its Sureties written notification to immediately correct the situation or the Contract shall be terminated.

In the event that such notice is given, and, in the event such situation is not corrected, or arrangements for correction satisfactory to the City are not made, within ten (10) calendar days from the date of such notice or within such other period of time as may be specified by the City in the notice, the Contract shall upon the expiration of said period cease and terminate. In the event of any such termination, City may take over the Work and prosecute the Work to completion, or otherwise, and the Contractor and its Sureties shall be liable to City for any cost occasioned City thereby, as hereinafter set forth.

In the event City completes the Work, or causes the Work to be completed, no payment of any kind shall be made to Contractor until the Work is complete. The cost of completing the Work, including but not limited to, extra costs of project administration and management incurred by City, both direct or indirect, shall be deducted from any sum then due, or that becomes due, to Contractor from City. If sums due to Contractor from City are less than the cost of completing the Work, Contractor and its Sureties shall pay City a sum equal to this difference on demand. In the event City completes the Work, and there is a sum remaining due to Contractor after City deducts the costs of completing the Work, then City shall pay such sum to Contractor. The Contractor and Contractor's Sureties shall be jointly and severally liable for all obligations imposed on Contractor hereunder.

No act by City before the Work is finally accepted, including, but not limited to, exercise of other rights under the Contract, actions at law or in equity, extensions of time, payments, assessments of liquidated damages, occupation or acceptance of any part of the Work, waiver of any prior breach of the Contract or failure to take action pursuant to this section upon the happening of any prior default or breach of Contractor, shall be construed to be a waiver or estoppel of the City's right to act pursuant to this Section upon any subsequent event, occurrence or failure by Contractor to fulfill the terms and conditions of the Contract. The rights of City to terminate the Contract pursuant to this Section and

pursuant to Sections 26 and 27 are cumulative and are in addition to all other rights of City pursuant to the Contract and at law or in equity.

29. CONTRACTOR BANKRUPT

If Contractor should commence any bankruptcy proceeding, or if Contractor is adjudged a bankrupt, or if Contractor makes any assignment for the benefit of creditors, or if a receiver is appointed on account of Contractor's insolvency, then the City may, without prejudice to any other right or remedy, terminate the Contract and complete the work by giving notice as provided in Section 28 above.

30. SURETIES' OBLIGATIONS UPON TERMINATION

If the City terminates the Contract pursuant to Section 28 or Section 29 above:

(A) The Surety under Contractor's performance bond shall be fully responsible for all of the Contractor's remaining obligations of performance under the Contract as if the Surety were a party to the Contract, including without limitation Contractor's obligations, as provided in the Contract Documents, to complete and provide a one-year warranty of the entire Work, pay liquidated damages and indemnify, defend and hold harmless City, up to the full amount of the performance bond.

(B) The Surety under Contractor's payment bond shall be fully responsible for the performance of all of the Contractor's remaining payment obligations for work, services, equipment or materials performed or provided in connection with the Work or any portion thereof, up to the full amount of the payment bond.

31. ACCOUNTING RECORDS OF CONTRACTOR

During performance of the Contract and for a period of three (3) years after completing the entire Work, Contractor shall maintain all accounting and financial records related to the Contract and performance of the Work in accordance with generally accepted accounting practices, and shall keep and make such records available for inspection and audit by representatives of the City upon reasonable written notice.

32. USE TAX REQUIREMENTS

During the performance of this Agreement, CONTRACTOR, for itself, its assignees and successors in interest, agrees as follows:

(A) Use Tax Direct Payment Permit: For all leases and purchases of materials, equipment, supplies, or other tangible personal property used to perform the Agreement and shipped from outside California, the Contractor and any subcontractors leasing or purchasing such materials, equipment, supplies or other tangible personal property shall obtain a Use Tax Direct Payment Permit from the California State Board of Equalization ("SBE") in accordance with the applicable SBE criteria and requirements.

(B) Sellers Permit: For any construction contract and any construction subcontract in the amount of $5,000,000 or more, Contractor and the subcontractor(s) shall obtain sellers permits from the SBE and shall register the jobsite as the place of business for the purpose of allocating local sales and use tax to the City. Contractor and its subcontractors shall remit the self-accrued use tax to the SBE, and shall provide a copy of each remittance to the City.

(C) The above provisions shall apply in all instances unless prohibited by the funding source for the Agreement.

IN WITNESS WHEREOF, the parties hereto have signed this Agreement on the date set for opposite their names.

CONTRACTOR

Under penalty of perjury, I certify that the taxpayer identification number and all other information provided here are correct.

DATE _____

BY_____

_____
Print Name

_____
Title

BY_____

_____
Print Name

_____
Title

_____
Federal ID#

_____
State ID#

_____
City of Sacramento Business Operation Tax Certificate No. (City will not award contract until Certificate Number is obtained)

Type of Business Entity *(check one)*:

_____ Individual/Sole Proprietor
_____ Partnership
_____ Corporation
_____ Limited Liability Company
_____Other (*please specify:*_____)

CITY OF SACRAMENTO
a municipal corporation

DATE _____

BY _____
For: John F. Shirey, City Manager

Original Approved As To Form:

_____
City Attorney

Attest:

_____
City Clerk

CITY OF SACRAMENTO **Bond #:_____**
PERFORMANCE BOND **Premium: _____**
Department of Utilities

WHEREAS, the City of Sacramento, in the State of California, hereinafter called City has conditionally awarded to (*here insert full name and address of Contractor)*:

as principal, hereinafter called Contractor, an agreement for construction of:

P/Q ALLEY SEWER AND WATER REPLACEMENT, 16TH TO 17TH STREET
(PN: X14010083) (B14141321015)

in accordance with the plans, specifications, drawings, conditions, and project manual prepared therefore, which agreement is by reference made a part hereof, and is hereinafter referred to as the Contract; and

WHEREAS, under the terms of the Contract, Contractor is required to furnish a bond for the faithful performance of the Contract.

NOW, THEREFORE, we the Contractor and (*here insert full name and address of Surety*):

_____, a corporation duly authorized and admitted to transact business and issue surety bonds in the State of California, hereinafter called Surety, are held and firmly bound unto the City, as obligee, in the sum of _____DOLLARS $_____), for the payment of which sum well and truly to be made, we the Contractor and Surety bind ourselves, our heirs, executors, administrators, successors and assigns, jointly and severally. The condition of this obligation is such that, if the Contractor, Contractor's heirs, executors, administrators, successors, or assigns, shall in all things stand to and abide by, and well and truly keep and fully perform all covenants, conditions and agreements required to be kept and performed by Contractor in the Contract and any changes, additions or alterations made thereto, to be kept and performed at the time and in the manner therein specified, and in all respects according to their true intent and meanings, and shall indemnify and save harmless the City, its officers, employees and agents, as therein provided, then this obligation shall be null and void; otherwise shall be and remain in full force and effect. This obligation shall remain in full force and effect until (1) the date that the Contractor no longer has any remaining obligation of performance under the Contract, or (2) the date that is one year after the date that the work to be performed under the Contract is accepted as complete by the City, whichever occurs later.

As part of the obligation secured hereby and in addition to the sum specified above, there shall be included all costs, expenses and fees, including attorney's fees, reasonably incurred by City in successfully enforcing such obligation, all to be taxed as costs and included in any judgement rendered.

The Surety, for value received, hereby stipulates and agrees that no change, extension of time, alteration or addition to the terms of the Contract, or to the work to be performed thereunder, or to the specifications accompanying the same, shall in any way affect its obligations on this bond, and it does hereby waive notice of any such change, extension, alteration or addition.

IN WITNESS WHEREOF, this instrument has been duly executed by authorized representatives of the Contractor and Surety.
SIGNED AND SEALED on _____, 2013.

_____
(Contractor) (Seal)

By _____

Title _____

ORIGINAL APPROVED AS TO FORM:

_____
City Attorney

_____
(Surety) (Seal)

By _____

Title _____
Agent Name and Address _____

_____
Agent Phone # _____
Surety Phone # _____
California License # _____
Surety Email: _____

CITY OF SACRAMENTO
PAYMENT BOND
Department of Utilities

Bond No: _____
Premium: _____

WHEREAS, the City of Sacramento, in the State of California, hereinafter called City, has conditionally awarded to:

hereinafter called Contractor, a contract for construction of:

P/Q ALLEY SEWER AND WATER REPLACEMENT, 16TH TO 17TH STREET
(PN: X14010083) (B14141321015)

Which contract is by reference incorporated herein and made a part hereof, and is hereinafter referred to as the Contract; and

WHEREAS, under the terms of the Contract and pursuant to Chapter 5 of Title 3 of Part 6 of Division 4 of the California Civil Code (commencing with Civil Code Section 9550), Contractor is required to furnish a good and sufficient payment bond to secure payment of the claims to which reference is made in Civil Code Section 9554.

NOW, THEREFORE, we the Contractor and (*here insert full name and address of Surety*):

_____ , a corporation a corporation duly authorized and admitted to transact business and issue surety bonds in the State of California, hereinafter called Surety, are held and firmly bound unto the City, and unto all persons or entities entitled to assert a claim against a payment bond under any of the aforesaid Civil Code provisions in the sum of _____DOLLARS ($_____), on the condition that if Contractor shall fail to pay for any materials or equipment furnished or used in performance of the Contract, or for any work or labor thereon of any kind, or for amounts due under the Unemployment Insurance Act with respect to such work or labor, or for any amounts required to be deducted, withheld, and paid over to the Franchise Tax Board or the Employment Development Department from the wages of employees of the Contractor and all subcontractors with respect to such work or labor, then the Surety shall pay the same in an amount not exceeding the sum specified above. If suit is brought upon this bond, Surety shall pay, in addition to the above sum, all costs, expenses and fees, including attorney's fees, reasonably incurred by any party in successfully enforcing the obligation secured hereby, all to be taxed as costs and included in any judgment rendered. Should the condition of this bond be fully performed, then this obligation shall become null and void, otherwise it shall be and remain in full force and effect, and shall bind Contractor, Surety, their heirs, executors, administrators, successors and assigns, jointly and severally.

It is hereby stipulated and agreed that this bond shall inure to the benefit of all persons, companies, corporations, political subdivisions, State agencies and other entities entitled to assert a claim against a payment bond under any of the aforesaid Civil Code provisions, so as to give a right of action to them or their assigns in any suit brought upon this bond. The Surety, for value received, hereby stipulates and agrees that no change, extension of time, alteration or addition to the terms of the Contract or to the work to be performed thereunder or to the specifications accompanying the same shall in any way affect its obligations on this bond, and it does hereby waive notice of any such change, extension, alteration or addition.

IN WITNESS WHEREOF, this instrument has been duly executed by authorized representatives of the Contractor and Surety.
SIGNED AND SEALED on _____ 2013.

_____
(Contractor) (Seal)

By _____

Title _____

ORIGINAL APPROVED AS TO FORM:

_____
City Attorney

_____
(Surety) (Seal)

By _____

Title _____
Agent Name and Address _____

_____
Agent Phone # _____
Surety Phone # _____
California License # _____
Surety Email: _____

Effective 7-1-12

CALFIRONIA LABOR CODE RELATING TO APPRENTICES ON PUBLIC WORKS PROJECTS

See following links: www.dir.ca.gov and/or www.leginfo.ca.gov

SPECIAL PROVISIONS

Form **W-9**
(Rev. December 2011)
Department of the Treasury
Internal Revenue Service

Request for Taxpayer Identification Number and Certification

Give Form to the requester. Do not send to the IRS.

Print or type
See Specific Instructions on page 2.

Name (as shown on your income tax return)

Business name/disregarded entity name, if different from above

Check appropriate box for federal tax classification:
☐ Individual/sole proprietor ☐ C Corporation ☐ S Corporation ☐ Partnership ☐ Trust/estate

☐ Limited liability company. Enter the tax classification (C=C corporation, S=S corporation, P=partnership) ▶

☐ Other (see instructions) ▶

☐ Exempt payee

Address (number, street, and apt. or suite no.)

Requester's name and address (optional)

City, state, and ZIP code

List account number(s) here (optional)

Part I Taxpayer Identification Number (TIN)

Enter your TIN in the appropriate box. The TIN provided must match the name given on the "Name" line to avoid backup withholding. For individuals, this is your social security number (SSN). However, for a resident alien, sole proprietor, or disregarded entity, see the Part I instructions on page 3. For other entities, it is your employer identification number (EIN). If you do not have a number, see *How to get a TIN* on page 3.

Note. If the account is in more than one name, see the chart on page 4 for guidelines on whose number to enter.

Social security number
☐☐☐ – ☐☐ – ☐☐☐☐

Employer identification number
☐☐ – ☐☐☐☐☐☐☐

Part II Certification

Under penalties of perjury, I certify that:

1. The number shown on this form is my correct taxpayer identification number (or I am waiting for a number to be issued to me), and
2. I am not subject to backup withholding because: (a) I am exempt from backup withholding, or (b) I have not been notified by the Internal Revenue Service (IRS) that I am subject to backup withholding as a result of a failure to report all interest or dividends, or (c) the IRS has notified me that I am no longer subject to backup withholding, and
3. I am a U.S. citizen or other U.S. person (defined below).

Certification instructions. You must cross out item 2 above if you have been notified by the IRS that you are currently subject to backup withholding because you have failed to report all interest and dividends on your tax return. For real estate transactions, item 2 does not apply. For mortgage interest paid, acquisition or abandonment of secured property, cancellation of debt, contributions to an individual retirement arrangement (IRA), and generally, payments other than interest and dividends, you are not required to sign the certification, but you must provide your correct TIN. See the instructions on page 4.

Sign Here Signature of U.S. person ▶ Date ▶

General Instructions

Section references are to the Internal Revenue Code unless otherwise noted.

Purpose of Form

A person who is required to file an information return with the IRS must obtain your correct taxpayer identification number (TIN) to report, for example, income paid to you, real estate transactions, mortgage interest you paid, acquisition or abandonment of secured property, cancellation of debt, or contributions you made to an IRA.

Use Form W-9 only if you are a U.S. person (including a resident alien), to provide your correct TIN to the person requesting it (the requester) and, when applicable, to:

1. Certify that the TIN you are giving is correct (or you are waiting for a number to be issued),
2. Certify that you are not subject to backup withholding, or
3. Claim exemption from backup withholding if you are a U.S. exempt payee. If applicable, you are also certifying that as a U.S. person, your allocable share of any partnership income from a U.S. trade or business is not subject to the withholding tax on foreign partners' share of effectively connected income.

Note. If a requester gives you a form other than Form W-9 to request your TIN, you must use the requester's form if it is substantially similar to this Form W-9.

Definition of a U.S. person. For federal tax purposes, you are considered a U.S. person if you are:

- An individual who is a U.S. citizen or U.S. resident alien,
- A partnership, corporation, company, or association created or organized in the United States or under the laws of the United States,
- An estate (other than a foreign estate), or
- A domestic trust (as defined in Regulations section 301.7701-7).

Special rules for partnerships. Partnerships that conduct a trade or business in the United States are generally required to pay a withholding tax on any foreign partners' share of income from such business. Further, in certain cases where a Form W-9 has not been received, a partnership is required to presume that a partner is a foreign person, and pay the withholding tax. Therefore, if you are a U.S. person that is a partner in a partnership conducting a trade or business in the United States, provide Form W-9 to the partnership to establish your U.S. status and avoid withholding on your share of partnership income.

YEAR

CALIFORNIA FORM

2013 Withholding Exemption Certificate 590

This form can only be used to certify exemption from nonresident withholding under California Revenue and Taxation Code (R&TC) Section 18662. Do not use this form for exemption from wage withholding.

File this form with your withholding agent. (Please type or print)

Withholding agent's name

Payee's name

Payee's ☐ SSN or ITIN ☐ CA corp. no. ☐ FEIN ☐ CA SOS file no

Address (number and street, PO Box, or PMB no.)

Apt. no./ Ste. no.

City

State

ZIP Code

Read the following carefully and check the box that applies to the payee.

I certify that for the reasons checked below, the payee named on this form is exempt from the California income tax withholding requirement on payment(s) made to the entity or individual.

☐ **Individuals — Certification of Residency:**
I am a resident of California and I reside at the address shown above. If I become a nonresident at any time, I will promptly notify the withholding agent. See instructions for General Information D, Who is a Resident, for the definition of a resident.

☐ **Corporations:**
The above-named corporation has a permanent place of business in California at the address shown above or is qualified through the California Secretary of State (SOS) to do business in California. The corporation will file a California tax return and withhold on payments of California source income to nonresidents when required. If this corporation ceases to have a permanent place of business in California or ceases to do any of the above, I will promptly notify the withholding agent. See instructions for General Information F, What is a Permanent Place of Business, for the definition of permanent place of business.

☐ **Partnerships or limited liability companies (LLC):**
The above-named partnership or LLC has a permanent place of business in California at the address shown above or is registered with the California SOS, and is subject to the laws of California. The partnership or LLC will file a California tax return and will withhold on foreign and domestic nonresident partners or members when required. If the partnership or LLC ceases to do any of the above, I will promptly inform the withholding agent. For withholding purposes, a limited liability partnership (LLP) is treated like any other partnership.

☐ **Tax-Exempt Entities:**
The above-named entity is exempt from tax under California Revenue and Taxation Code (R&TC) Section 23701 _____ (insert letter) or Internal Revenue Code Section 501(c) _____ (insert number). The tax-exempt entity will withhold on payments of California source income to nonresidents when required. If this entity ceases to be exempt from tax, I will promptly notify the withholding agent. Individuals cannot be tax-exempt entities.

☐ **Insurance Companies, Individual Retirement Arrangements (IRAs), or Qualified Pension/Profit Sharing Plans:**
The above-named entity is an insurance company, IRA, or a federally qualified pension or profit-sharing plan.

☐ **California Trusts:**
At least one trustee and one noncontingent beneficiary of the above-named trust is a California resident. The trust will file a California fiduciary tax return and will withhold on foreign and domestic nonresident beneficiaries when required. If the trustee becomes a nonresident at any time, I will promptly notify the withholding agent.

☐ **Estates — Certification of Residency of Deceased Person:**
I am the executor of the above-named person's estate. The decedent was a California resident at the time of death. The estate will file a California fiduciary tax return and will withhold on foreign and domestic nonresident beneficiaries when required.

☐ **Nonmilitary Spouse of a Military Servicemember:**
I am a nonmilitary spouse of a military servicemember and I meet the Military Spouse Residency Relief Act (MSRRA) requirements. See instructions for General Information E, MSRRA.

CERTIFICATE: Please complete and sign below.

Under penalties of perjury, I hereby certify that the information provided in this document is, to the best of my knowledge, true and correct. If conditions change, I will promptly notify the withholding agent.

Payee's name and title (type or print) _____ Daytime telephone no._____

Payee's signature ▶ _____ Date _____

For Privacy Notice, get form FTB 1131.

7061133

Form 590 C2 2012

CITY OF SACRAMENTO
SPECIAL PROVISIONS
FOR
P/Q ALLEY SEWER AND WATER REPLACEMENT, 16TH TO 17TH STREET
(X14010083)

TABLE OF CONTENTS

SECTION 1 – GENERAL CONSTRUCTION REQUIREMENTS 1
1.01 Location, Scope of Work 1
1.02 Specifications 1
1.03 Time of Award 1
1.04 Providing Bonds and Surety 1
1.05 Interpretation of Contract Documents 1
1.06 Proof of Compliance with Contract 2
1.07 Shop Drawings & Submittals 2
1.08 Project Sign 2
1.09 Manufacturer's Instructions 3
1.10 Project Scheduling 3
1.11 Record Drawings 3
1.12 Materials and Equipment 3
1.13 Permits 4
1.14 Permanent Survey Monuments 4
1.15 Administrative Penalty Ordinance 4
1.16 Water Quality Control 4
1.17 Project Closeout 5
1.18 Payment 5
SECTION 2– PUBLIC CONVENIENCE & PROTECTION OF EXISTING CONDITIONS 5
2.01 Public Right-of-Way and Easements 5
2.02 Existing Facilities 5
2.03 Coordination of Work 6
2.04 Maintaining Water, Sewer & Drainage Flows 6
2.05 Work Performed by City Crews 7
2.06 Existing Site Conditions 7
2.07 Handling and Removal of Hazardous or Contaminated Materials 7
2.08 Health and Safety 8
2.09 Public Notification of Work 9
2.10 Maintenance of Traffic, Public Safety and Convenience 9
2.11 Removal of Street Parking 12
2.12 Payment 13
SECTION 3 – GENERAL SEWER CONSTRUCTION REQUIREMENTS 14

3.01 Trench Excavation and Backfill 14
3.02 Pavement Cutting and Surface Restoration 14
3.03 Temporary Paving 14
3.04 Closed Circuit Television Inspection of Pipes 14
3.05 Tree Preservation Requirements 15
3.06 Archaeological Resources Discovery 16
3.07 Payment 17
SECTION 4 – WATER CONSTRUCTION REQUIREMENTS 18
4.01 AWWA Standards - Water Mains 18
4.02 Opening Direction of Valves and Fire Hydrants 18
4.03 Trench Excavation and Backfill 18
4.04 Pavement Cutting and Surface Restoration 18
4.05 Distribution System Shutdowns for Water Main Installation & Connections 19
4.06 Water Shutdowns for Residential Water Service Tie-Ins 21
4.07 Plugged Fixtures 21
4.08 De-watering 21
4.09 Payment 21
SECTION 5 – ITEMS OF THE PROPOSAL 22
Item No. 1 Preconstruction Photographs 22
Item No. 2 8-inch Sewer Pipe to Remove, 10-inch Pipe to Place 22
Item No. 3 Manhole to Remove and Manhole No. 3 to Construct 23
Item No. 4 Existing Sewer Service, to Replace 25
Item No. 5 8-Inch Diameter Water Main to Furnish and Install 26
Item No. 6 8-Inch Diameter Gate Valve to Furnish and Install 26
Item No. 7 Reconnecting Existing Metered Water Service 27
Item No. 8 Existing Valves, Tees, Saddles and Water Mains to Remove or Abandon 27
Item No. 9 CCTV Inspection 28
Item No. 10 Connection to Existing Water Distribution System 28
Item No. 11 Unsuitable Material, Removal and Replacement 29
Item No. 12 Pipe ends to Plug 30
Item No. 13 Modified Type B Drain Inlet to Construct 30
Item No. 14 10-inch Drain Lead to Install 31
APPENDIX A 34
APPENDIX B 40

SPECIAL PROVISIONS
FOR
QP/Q ALLEY SEWER AND WATER REPLACEMENT, 16TH TO 17TH STREET
(X14010083)

SECTION 1 – GENERAL CONSTRUCTION REQUIREMENTS

1.01 Location, Scope of Work

These Special Provisions cover in general, the reconstruction of sewer and water facilities within P/Q Alley 16th to 17th Street. The work to be performed consists of constructing or replacing combined sewer and water pipelines, manholes, sewer services, and associated work. The Contractor shall provide all labor, materials, tools and equipment, and shall perform all work necessary to complete the subject project in place and make all required connections to the existing combined sewer system as shown on the Plans and as specified herein.

1.02 Specifications

The work to be performed under this contract shall be done in accordance with the Special Provisions contained herein. In these Special Provisions, reference is made to the Standard Specifications of the City of Sacramento, adopted June 2007, referred to herein as "Standard Specifications". The general requirements of this contract shall be governed by these Special Provisions first, followed by Sections 1 through 8 of the Standard Specifications. Other standards or specifications specified in these Special Provisions govern only the applicable technical specifications.

1.03 Time of Award

Time of Award for this contract shall be made within Sixty (60) calendar days after opening of the proposals to the lowest responsible bidder, per Section 3-2 of the Standard Specifications.

1.04 Providing Bonds and Surety

The Contractor shall provide signed agreement and surety bonds within ten (10) calendar days after receipt of notice to award by the City and prior to award by the City Council. The contractor shall be reimbursed for all surety bond costs should the City Council not award a contract.

1.05 Interpretation of Contract Documents

Questions from bidder's concerning the interpretation of any portion of the contract documents may be directed to Rosa Millino of the City of Sacramento, Department of

Utilities, 1395 35th Ave, Sacramento, California, 95822, phone (916) 808-1451. Interpretation, where necessary, will be made by the City in the form of an addendum to the contract documents and, when issued, will be sent as promptly as is practicable to all parties to whom the bid documents have been issued. All such addenda shall become part of the contract.

It shall also be the bidder's responsibility to call to the attention of the Engineer any missing pages or drawings in the contract documents including the addenda. These items shall be brought to the attention of the Engineer at least 7 calendar days prior to the bid opening date.

1.06 Proof of Compliance with Contract

In order that the Engineer may determine whether the Contractor has complied with the requirements of the contract documents not readily determinable through inspection and tests of plant, equipment, work, or materials, the Contractor shall at any time when requested, at the Contractor's expense, submit to the Engineer properly authenticated documents or other satisfactory proofs as to his compliance with such requirements.

1.07 Shop Drawings & Submittals

In accordance with Section 5-7 of the Standard Specifications, Contractor shall prepare and submit for review 5 copies of the following shop drawings and submittals:

1. Construction schedule
2. Concrete mix design (manholes and paving)
3. Record drawings (upon completion of work)
4. Traffic control plan
5. Water quality control plan
6. Proposed pipe material and fittings
7. Manhole rehabilitation
8. Clean out assembly
9. Temporary diversion of flows (if necessary)
10. Dewatering plan (if necessary)
11. Water services
12. Public notification plan
13. Any other items

Contractor is advised that at the Engineer’s discretion, the above list may be expanded to include additional items to which Section 5-7 of the Standard Specifications will apply. Contractor shall keep one copy of the approved Traffic Control Plan and the Water Quality Control Plan at the construction site at all times.

1.08 Project Sign

Prior to beginning any onsite work the contractor shall install a total of two project signs. The signs shall be supplied by the City and are approximately 30-inches by 54-inches.

Location and height of sign installation shall be as directed by the Engineer. In general, the signs shall be installed a minimum of seven (7) feet and maximum of ten (10) feet above surrounding grade. If acceptable to the Engineer an existing sign post may be used, otherwise, the Contractor shall be required to install a new post. Each sign and post installed by the Contractor shall be removed at the end of the project and the sign returned to the City.

1.09 Manufacturer's Instructions

Contractor shall comply with manufacturer's installation instructions and procedures in accordance with Section 5-16 of the City Standard Specifications.

1.10 Project Scheduling

Due to adjacent developer project time constraints, this project shall be in construction on February 3, 2014 or as soon as weather will allow thereafter. The Contractor shall submit a detailed schedule showing all items of work prior to initiating construction. The schedule shall include the proposed sequencing of construction activities. The schedule shall be submitted, reviewed and updated in accordance with Section 7-2 of the Standard Specifications. No progress payments will be made for work completed prior to acceptance of the schedule.

Weekend work will be done in accordance with Section 7-4 of the Standard Specifications.

1.11 Record Drawings

The Contractor shall maintain a neat and accurate marked set of record drawings showing the final locations and layout of piping and conduit; structures; and other facilities. Drawings shall be kept current weekly, with all work instructions and change orders, and construction adjustments. Installed cleanouts shall be dimensioned to the nearest property line or be assigned stations to the nearest foot. Drawings shall be subject to the inspection of the Engineer at all times and progress payments, or portions thereof, may be withheld if drawings are not accurate and current. Pipe material shall be added to drawing, if not denoted on contract drawings. Prior to acceptance of the work, the Contractor shall deliver to the Engineer one (1) set of neatly marked record drawings accurately showing the information required above.

Record drawings shall be submitted and approved by the Engineer in accordance with "Shop Drawings and Submittals" of these Special Provisions.

1.12 Materials and Equipment

The Contractor is responsible for the care and protection of all materials and equipment until the completion and final acceptance of the work, in accordance with Section 5-15, 5-16, 5-17, 5-18, 5-21, and 5-22 of the Standard Specifications and these Special Provisions. *PVC pipe manufactured by JM Pipe or PW Eagle Pipe will not be allowed.*

1.13 Permits

None required.

1.14 Permanent Survey Monuments

The Contractor is responsible for verifying that arrangements have been made for preserving and/or perpetuating all permanent survey monuments affected by the work, in accordance with Section 5-6 of the Standard Specifications.

1.15 Administrative Penalty Ordinance

The Contractor shall become familiar with Chapter 12.20 of the City Code which contains minimum requirements and restrictions relating to construction activities within the City right of way and establishes administrative penalties for non-compliance of these requirements. The Contractor may be assessed the administrative penalty for each violation of any provision addressed by the ordinance, unless modified herein, and amounts can be deducted from the Contract. The ordinance includes the following general categories:

Working hours for the City's "Primary Streets"
Traffic control plan requirements
Access to private property
Maintenance of construction areas
Maintenance of traffic, public safety and convenience
Repair of traffic control systems
Care of existing known facilities
Protection of existing improvements
Public notification
Noise levels
Copies of the ordinance are available from the City Clerk's Office, 915 I Street, Sacramento, CA. 95814, and at www.cityofsacramento.org.

1.16 Water Quality Control

The Contractor shall be responsible for the requirements consisting of regulations contained in the National Pollution Discharge Elimination System (NPDES) Stormwater Permit, issued to the City and in accordance with Section 16 of the Standard Specifications.

The Contractor shall prepare and submit an erosion, sediment and pollution control plan (ESC Plan) to the Engineer for review. The ESC Plan shall be submitted a minimum of 48 hours prior to start of the work. The Contractor shall not begin work until an accepted ESC Plan is on file with the Engineer.

The City reserves the right to take corrective action and withhold the City's costs for corrective action from progress payments or final payment in accordance with Section 7, "Retention of Sums Charged against the Contractor", of the Agreement, contained herein. Any fines, including third-party claims, levied against the City as a result of the

Contractor's non-compliance are the Contractor's sole responsibility and will be withheld from progress payments or final payment in accordance with Section 7, of the Agreement.

1.17 Project Closeout

When the project is completed in accordance with the Plans and Specifications, the Contractor shall notify the Engineer of the completion of the project at which time the City will prepare a list of deficient work items, or punch list, and after all punch list items have been completed to the satisfaction of the Engineer, and as-built drawings are completed and submitted, a completion report will be prepared, as detailed and in accordance with Section 8-4 of the Standard Specifications.

1.18 Payment

Full compensation for furnishing all labor, materials, tools, equipment and incidentals and for doing all work involved in performing and complying with these General Requirement items shall be considered as included in the prices paid for in the various contract bid items the Contractor deems appropriate and no additional compensation will be allowed.

SECTION 2– PUBLIC CONVENIENCE & PROTECTION OF EXISTING CONDITIONS

2.01 Public Right-of-Way and Easements

All water, sewer & drainage pipe and appurtenances constructed as part of this project are to be placed within public street rights-of-way and easements. The Contractor shall confine his or her operations within the limits of existing street right-of-way or easements as much as practicable.

In the event the Contract requirements necessitate the Contractor to encroach onto adjoining private property the Contractor shall make all necessary arrangements with the owner of the property for such encroachment. A copy of any written agreements entered into between the Contractor and the property owner concerning encroachment onto private property shall be provided to the Engineer prior to beginning any work on the property described in the agreement.

2.02 Existing Facilities

Protection and maintenance of existing utilities shall meet the applicable requirements of Sections 13 of the Standard Specifications and these Special Provisions.

The location, alignment, and depth of existing underground utilities as shown on the Plans are taken from public records and no responsibility is assumed for the accuracy thereof. For the most part, underground utility services are not shown on the Plans. Attention is directed to the provisions in Section 6-19 of the Standard Specifications.

The Contractor will insure that utility services to customers in the project are maintained.

The Contractor is expected to "pothole" existing underground utilities a minimum of ten (10) working days in advance at any location where an existing utility may be in conflict with the proposed work.

The cost of relocating existing overhead and/or underground utilities not specified on the Plans to be relocated, but are relocated or cut and reconnected at the Contractor's choice, shall be borne by the Contractor.

2.03 Coordination of Work

The Contractor shall cooperate and coordinate regularly with the residents and business owners along the alley way during the course of construction and shall minimize impacts to the residents and business owners.

The Contractor shall also coordinate with Tricorp Hearn Contractor on an adjacent development project at 1601, 1609 and 1615 16th Street. Please contact Project Manager Mike Thomas at 916-471-9697 or Superintendent Mark Redmond at 919-257-9892. The development project is scheduled to be in construction during the construction of this project. The Contractor shall coordinate with the development project contractor to avoid delays, work out access needs, and assure that the operations minimize impact on traffic and the general public. The cost of coordination shall be included in those bid items the Contractor deems appropriate.

This project shall be in construction on February 3, 2014 or as soon as weather will allow thereafter.

2.04 Maintaining Water, Sewer & Drainage Flows

The Contractor shall be responsible for maintaining water, sewer, and drainage flows including emergency repairs and temporary bypasses in accordance with Section 13-2 of the City Standard Specifications and these Special Provisions.

The Contractor shall be responsible for maintaining existing sewer flows until new sewer improvements are complete and functioning. The cut sewer services shall be replaced or repaired by 5:00 PM of the same day, and shall be constructed per Standard Drawing S-260 & S-265.

The Contractor shall be responsible for maintaining existing drainage flow until the final completion of the project. This includes removal of ponded water from any temporary low points created during construction.

No additional compensation will be paid to the Contractor for maintenance of existing facilities; the cost of this work shall be included in the various contract items of work.

Temporary Diversion of Sewer and Drainage Flows

Should it become necessary for the Contractor to temporarily divert, bypass, or impound

flows carried by existing sewer or drainage systems through or around the construction operations within the limits of this project, the Contractor shall prepare a plan of such diversion, bypass, or impoundment and submit the plan to the Engineer for approval.

The plan shall be sufficiently detailed to illustrate the concept proposed. The plan shall also provide information on the quantity of flow to be conveyed by the diversion or bypass system or the volume to be impounded. The plan shall indicate the number, size and configuration of any channel, and the size and configuration of any impoundment basin to be used.

The plan for temporary diversion or bypassing of existing sewer or drainage flows shall be submitted to the Engineer a minimum of 10 working days prior to the start of work on any temporary system. The Contractor shall not begin work on temporary diversion, bypass, or impoundment system until an approved plan is on file with the Engineer.

No additional compensation will be paid to the Contractor for temporary diversion, bypassing, or impoundment of existing sewer or drainage flows. The cost of such work shall be included in the various contract items of work.

2.05 Work Performed by City Crews

The Contractor is advised that the City retains the option of performing with City crews all or a portion of any work involved in relocating, repairing, or otherwise restoring existing sewer, water, and drainage systems and services to developed properties within the limits of the project that may be in conflict with the proposed project improvements. Any such work performed by City forces will be at the discretion and convenience of the City. All work performed and materials provided by the City will be paid for by the Contractor or removed from this contract at no additional cost to the City.

2.06 Existing Site Conditions

Bidders are directed to Section 2-4 of the Standard Specifications which require Bidders to examine the project site.

2.07 Handling and Removal of Hazardous or Contaminated Materials

In the event hazardous or contaminated materials are encountered at the site for which separate handling or removal provisions have not been made in these Special Provisions, the Contractor shall stop work on that item, contact the Engineer and schedule his operations to work elsewhere on the site, if possible. The City will be responsible for handling and removal of hazardous material or may request that the Contractor be made available, through contract change order, to provide additional services as needed for the completion of the work. Additional services may consist of retaining a subcontractor who possesses a California license for hazardous substance removal and remedial actions.

Hazardous or contaminated materials may only be removed and disposed of from the project site in accordance with the following provisions:

1. All work is to be completed in accordance with the following regulations and requirements:
   a. Chapter 6.5, Division 20, California Health and Safety Code.
   b. California Administration Code, Title 22, relating to Handling, Storage, and Treatment of Hazardous Materials.
   c. City of Sacramento Building Code and the Uniform Building Code , 1994 edition.

2. Coordination shall be made with the County of Sacramento Environmental Management Department, Hazardous Materials Division, and the necessary applications shall be filed.

3. All hazardous materials shall be disposed of at an approved disposal site and shall only be hauled by a current California registered hazardous waste hauler using correct manifesting procedures and vehicles displaying a current Certificate of Compliance. The Contractor shall identify by name and address the site where toxic substances shall be disposed of. No payment for removal and disposal services shall be made without a valid certificate from the approved disposal site that the material was delivered.

None of the aforementioned provisions shall be construed to relieve the Contractor from the Contractor's responsibility for the health and safety of all persons (including employees) and from the protection of property during the performance of the work. This requirement shall be applied continuously and not be limited to normal working hours.

2.08 Health and Safety

The Contractor is warned that existing sewers and appurtenances have been exposed to sewage and industrial wastes. These facilities shall therefore be considered contaminated with disease-causing organisms. Personnel in contact with contaminated facilities, debris, wastewater, or similar items shall be advised by the Contractor of the necessary precautions that must be taken to avoid becoming diseased. It is the Contractor's responsibility to urge his personnel to observe a strict regime of proper hygienic precautions, including any inoculations recommended by the local public health officer.

Because of the danger of solvents, gasoline, and other hazardous material in the existing sewers, these areas shall be considered hazardous to open flame, sparks, or unventilated occupancy. The Contractor shall be aware of these dangers and shall take the necessary measures to assure his personnel observe proper safety precautions when working in these areas.

The Contractor shall not allow any wastewater to discharge from sewage collection systems onto adjacent lands or waters. In case of accidental discharge, the Contractor shall be responsible for containment, immediate cleanup and disposal at his own expense to the full satisfaction of the Engineer. Where containment is not possible,

adequate disinfection shall be provided by the Contractor at his expense as directed by the Engineer or agency with jurisdiction. If, in the opinion of the Engineer, the Contractor fails to adequately follow the above guidelines, he will make arrangements to have the work done by others, and have the cost charged to the Contractor.

2.09 Public Notification of Work

The Contractor shall notify property owners and/or tenants adjacent to the project limits in writing two (2) working days in advance of beginning work. 24 hours prior to any water shutdowns, Contractor shall provide additional notice. The notice shall be approved by the Engineer and shall describe the work to be performed, the anticipated duration of construction and the name and telephone number of the Contractor's representative that can be reached 24 hours a day, seven (7) days a week. See sample notification letters in Appendix B.

2.10 Maintenance of Traffic, Public Safety and Convenience

The Contractor's attention is directed to Sections 6-6 through 6-11, 7-4 and 16-3 of the Standard Specifications.

Spillage resulting from hauling operations along or across any public traveled way shall be removed immediately by the Contractor at his expense. Water or dust palliative shall be applied if ordered by the Engineer for the alleviation or prevention of dust nuisance.

All persons performing work shall repair or replace, to previous condition or better, all existing traffic control system markers or devices that are damaged or destroyed during work within three (3) calendar days of the completion of work in the immediate area unless written direction extending the time period or relieving the persons performing work of this obligation is provided by the Engineer.

The Contractor will ensure that utility services to customers in the project are maintained.

Contractor shall not interfere with or impair any railroad operations in accordance with Section 6-6 of the City Standard Specifications.

The Contractor shall be required to establish traffic scheduling and control measures acceptable to the Engineer prior to starting any work. The Contractor shall submit to the Engineer for review and approval a plan showing proposed traffic control measures and/or detours for vehicles and pedestrians affected by the construction work. This plan shall be submitted a minimum of ten (10) working days prior to the scheduled commencement of any work by the Contractor. **The Contractor will not be allowed to begin work until an approved plan is on file with the Engineer.** In addition, the approved plan shall be kept on hand at the project site at all times while construction is in progress. **All advance warning and traffic delineation shall conform to the provisions of Section 6-10 of the Standard Specifications.**

The Contractor's traffic control plan shall include location of proposed work area, locations of areas where the public right of way will be closed or obstructed, any proposed phases of traffic control and time period of when traffic control will be in effect. The traffic control plan shall also include name and business address of Contractor and a statement that the Contractor will comply with City's noise ordinance.
The Contractor shall be solely and completely responsible for furnishing, installing, and maintaining all warning signs and devices necessary to safeguard the general public and the work, and to provide for the safe and proper routing of all vehicular and pedestrian traffic during the performance of the work. The requirement shall apply continuously and shall not be limited to normal working hours.

The Contractor shall perform the following requirements included in the City ordinance Chapter 12.20, with this contract:

1. The Contractor shall not cause public rights-of-way, public property or public easement to be covered with construction related trash, debris, garbage, waste material or soil. Areas affected by the construction, must be cleaned to the satisfaction of the Engineer prior to re-opening to the public.

2. Trench plates shall not be utilized for more than three (3) calendar days in one location and temporary surfacing shall not be utilized for more than five (5) calendar days in one location without prior written approval of the Engineer.

3. The Contractor shall provide access to all existing driveways at all times except when excavation is in progress, when forms are in place, when concrete or asphalt is being placed or unless other arrangements are made with the property owner. The Contractor shall take precautions so as not to entrap vehicles on private property during the progress of the work. Driveways may be closed only during normal working hours and only after giving property owners a minimum of twenty-four (24) hours notice in advance of the closure. Access for emergency vehicles shall be available on all streets within the construction area at all times.

4. Rear access to buildings and existing parking areas behind buildings shall be maintained. If arrangements have been made with property owners, the Contractor may close such access for a limited time. Contractor shall give property owners forty-eight (48) hours notice in advance of the closure.

5. Provide for pedestrian traffic at all times except where closures are approved in advance by the Engineer.

6. At least 2 lanes of traffic shall be maintained at all times in 16th Street if existing parking stalls are removed on the west side of the street per **Section 2.11 Removal of Street Parking** in these Special Provisions. If Contractor elects to maintain one lane open, a changeable message board shall be used and placed 7 days in advance.

All work within public streets and/or roadway right-of-way shall be done in an expeditious manner so as to cause as little inconvenience to the traveling public as possible. Skid - resistant steel plates or other approved methods shall be used to cover all open excavations in the roadway during non-working hours for the entire project.

7. City working hours are defined to be between 7:00 am and 6:00 pm, Monday through Friday, excluding legal holidays unless otherwise defined in these Special Provisions.

8. For work done before 7:00 A.M. or after 6:00 P.M., or during all daylight hours between 6:00 P.M. Friday to 7:00 A.M. Monday, the alley may be closed provided proper detours are provided and only if arrangements have been made with the property owners in advance and approved by the Engineer. A minimum of five (5) working days notice shall be given to property owners in advance of closure. At no time can 16th Street be closed.

9. At night and at other times when work is not in progress, the entire roadway and alley shall be open to the public for pedestrian and vehicular traffic.

The Contractor is hereby alerted that 16th Street is designated a "primary street" and as such the requirements and administrative penalties of Chapter 12.20 of the City ordinance apply. In accordance with the ordinance, the Contractor shall not impede traffic Monday through Friday between 7:00 am to 8:30 am and 4:00 pm to 6:00 pm. Saturday hours can be between 7 am and 6 pm and Sunday 9am to 6 pm.. **Work in P Street shall be scheduled on weekends, provided there are no events scheduled that would impede Construction activities on a particular weekend unless otherwise approved by the Engineer.**

All signs and street marking damage caused by or related to the construction of this project shall be replaced in kind by the Contractor. In the case of partial damage to lane stripes and traffic lettering the whole stripe or marking in its entirety shall be replaced. Temporary markings and striping shall be installed within 72 hours (three working days) of damage.

Prior to commencing work and/or closing the street or alley, Contractor shall contact the following City Divisions and agencies:

1. Police Communication Center one (1) working day prior to closure by calling 277-1750, or fax at 277-1772.

2. Fire Department Communications Center one (1) working day prior to closure by calling 228-3035 or fax at 228-3082.

3. City Traffic Engineering Services five (5) working days prior to closure by calling 808-5307.

4. City Solid Waste Division five (5) working days prior to closure by calling 808-4952 or fax at 808-4999. The Contractor shall also coordinate with the property owners all relocations of trash receptacles necessary to maintain garbage collection.

4. Street Parking five (5) working days prior to closure by calling 808-5579 or fax at 808-7501.

5. Regional Transit five (5) working days prior to closure by calling Lynn Cain at 321-5375 or fax at 557-4541.

At a minimum, the information faxed shall include:

Project name and number
Contractor's name and a 24-hour phone number
City of Sacramento's project manager's name
City Inspector Name and phone number
Limits of street closure, with street names
Duration of street closure

2.11 Removal of Street Parking

In Metered Parking Areas:

Seventy-two (72) hours prior to construction, the Contractor shall place signs adjacent to every third parking stall stating, "NO PARKING - (specific times and dates) - Tow Away" or "NO PARKING - (specific times and dates) - This Block". Contractor shall also contact the City Parking Division prior to placing barricades.

Signs shall be placed before 1:00 PM on the day selected to allow sufficient time for City inspection.

The Contractor shall request the City Parking Division to cover each parking meter, prior to construction, with a "NO PARKING" sign and the signs previously placed adjacent to every third stall shall be mounted on a barricade and moved into the parking stall at the Contractors expense.

If the Contractor needs less than the entire block, every stall removed shall be barricaded in conjunction with the covering of parking meters.

Where parking removal is necessary, at metered parking stalls, the Contractor shall coordinate with the City Parking Division ten (10) days in advance and shall be responsible for the payment of parking removal fees (City Code Section 25.122-1). It is recommended that the Contractor consult with the City Parking Division (phone 916-808-5874) prior to submission of his bid to obtain an estimate of the fees for this project. Note: Typical fees are $50 to bag the first meter and $5 each additional meter. Daily meter fees are typically $6.00 each day Monday through Saturday.

In Non-Metered Parking Areas:

Seventy-two (72) hours prior to construction (except Monday work, barricades shall be placed on the prior Thursday), the Contractor shall place signed Type II barricades stating "NO PARKING - (specific times and dates) - Tow Away" or "NO PARKING - (specific times and dates) - This Block", at 50 to 60 foot intervals in the work area. The Contractor shall notify the City Parking Division (916-808-5874) prior to placing barricades. No fee is required in Non-metered zones.
"NO PARKING" signs shall be approved by the Engineer prior to their use. "NO PARKING" signs and barricades shall be supplied by the Contractor. The Contractor shall notify the Engineer immediately after the "NO PARKING" signs are in place.

Barricades shall be placed before 1:00 PM on the day selected to allow sufficient time for City inspection.

Failure to comply with this section will prevent the City from towing vehicles parked within the proposed work area until the provisions of this section have been met and will require rescheduling of planned work. Additionally, “NO PARKING” signs and barricades shall not be removed prior to removal/towing of vehicles in violation of posted “NO PARKING” signs.

2.12 Payment

Full compensation for furnishing all labor, materials, tools, equipment and incidentals and for doing all work involved in performing and complying with these General Requirement items shall be considered as included in the prices paid for in the various contract bid items the Contractor deems appropriate and no additional compensation will be allowed.

SECTION 3 – GENERAL SEWER CONSTRUCTION REQUIREMENTS

3.01 Trench Excavation and Backfill

Trench excavation and backfill in all streets shall meet the applicable requirements of Sections 10, 14 and 26 of the Standard Specifications and these Special Provisions, see Backfill & Resurfacing Detail T-80A in Appendix A. If specified in these Special Provisions, pipe shall be backfilled using Controlled Density Fill (CDF), in accordance with Section 10-16 of the Standard Specifications, and as directed by the Engineer. Slurry cement backfill will not be allowed.

When the Engineer approves shallow placement of drain inlet leads requiring protective measures, all work associated with protective measures shall be considered as extra and paid per Section 8 of the Standard Specifications.

3.02 Pavement Cutting and Surface Restoration

Pavement cutting and surface restoration shall conform to the applicable provisions of Section 26-11 of the Standard Specifications and these Special Provisions. The Contractor shall restore surfaces in kind (using the same surface material as existing) unless otherwise noted on the Plans or within these Special Provisions. Payment for restoring the surface in kind within any excavation shall be included in the associated item of work unless otherwise stated in these Special Provisions.

If trench crosses sidewalk, curb, and gutter, Contractor shall replace entire sidewalk panel to nearest control or expansion joint on both sides of trench wall. Extent of curb and gutter replacement shall coincide with sidewalk panel being replaced. Pavement cutting shall be perpendicular and parallel to the centerline of the road when practicable.

3.03 Temporary Paving

Temporary paving shall be in accordance with Section 14-4 of the Standard Specifications.

3.04 Closed Circuit Television Inspection of Pipes

All newly-constructed pipes shall be inspected by the Contractor utilizing a remote closed circuit in-line television (CCTV) camera. The CCTV inspections shall be conducted after all utilities have been installed and backfill compaction has been completed, but prior to final paving.

Contractor shall also clean pipe as necessary to remove standing water and to remove solids, debris, grease or grit from the entire circumference of the pipe between manholes or access points within the project limits.

The Contractor shall notify the Engineer two (2) working days in advance of the

anticipated date of the CCTV inspection so that the Engineer may observe the flow control, cleaning and CCTV inspection operations. It shall be the Contractor's responsibility to coordinate the CCTV inspection with the Engineer.

Perform all CCTV inspection in accordance with NASSCO's Pipeline Assessment Certification Program (PACP). CCTV inspections shall be conducted entirely in digital format and shall be recorded in MPG or AVI format written to DVD and shall be compatible with the Granite XP software (version 3.7.4 or City's current version). All CCTV inspection reports shall be within +/- 2 (two) feet of the measured linear footage along the existing pipe centerline from the center of manhole to the center of manhole or access point.

The documentation of the work shall consist of a DVD, PACP CCTV Reports, and the unmodified PACP database. **The database shall contain PACP scoring for each inspection observation or defect.** The documentation shall note important features encountered during the inspection. The speed of travel shall be slow enough to detect reverse slope or low spots in pipe grades and to inspect and identify each pipe joint, service connection, etc., but should not, at any time, be faster than 30 feet per minute. The CCTV camera shall be centered in the pipe to provide accurate distance measurements to provide exact locations of important features in the pipe and these footage measurements shall be displayed and documented on the video. The completed DVD shall become the property of the City.

Every section of the pipe (manhole to manhole or access point) shall be identified on the video display and shall include: project name, street name, City manhole numbers, inspector's name, pipe diameter and length, and date of inspection. In addition to inspecting the pipe, all manholes shall be panned with the CCTV camera.

Work not following these Special Provisions may be rejected for payment and the Contractor may be required to re-do the work

3.05 <u>Tree Preservation Requirements</u>

Trees within the project area shall be protected by the following means:

1. The contractor shall hire an International Society of Arboriculture (ISA) certified arborist to do any required pruning for equipment clearance. The contractor shall contact the City Arborist (Dan Pskowski, 768-8604) for a root inspection(s) for trenching activities within the dripline(s) of the trees.

2. If during excavation for the project, tree roots greater than two inches in diameter are encountered, work shall stop immediately until the project arborist can perform an on-site inspection. All roots shall be cut clean and the tree affected may require supplemental irrigation/fertilization and pruning as a result of the root cutting. The project sponsor will be responsible for any costs incurred. Depending upon the amount of roots encountered and the time of year, wet burlap may be required along the sides of the trench.

3. The contractor shall be held liable for any damage to existing trees, i.e. trunk wounds, broken limbs, pouring of any deleterious materials, or concrete washout under the dripline of the trees. Damages will be assessed using the A Guide to Plant Appraisal eighth edition, published by the International Society of Arboriculture. An appraisal report shall be submitted for review by the City Arborist.

4. Tree protection methods noted above shall be identified on all construction plans for the project.

3.06 Archaeological Resources Discovery

Discovery of cultural resources. In the event that any prehistoric subsurface archaeological features or deposits, including locally darkened soil ("midden"), that could conceal cultural deposits, animal bone, obsidian and/or mortars are discovered during construction-related earth-moving activities, all work within 150 feet of the resources shall be halted, and the Contractor and City shall consult with a qualified archaeologist who are certified by the Society of Professional Archeologists (SOPA) and/or meet the federal standards as stated in the Code of Federal Regulations (36 CFR 61) to assess the significance of the find. Archaeological test excavations shall be conducted by a qualified archaeologist to aid in determining the nature and integrity of the find. If the find is determined to be significant by the qualified archaeologist, representatives of the City and the qualified archaeologist shall coordinate to determine the appropriate course of action. All significant cultural materials recovered shall be subject to scientific analysis and professional museum curation. In addition, a report shall be prepared by the qualified archaeologist according to current professional standards. Work shall be re-started only upon a notice to proceed from the City's Project Manager.

Discovery of Native American site. If a Native American site is discovered during project construction, the Contractor shall give immediate notice to the City's Project Manager, and the evaluation process shall include consultation with the appropriate Native American representatives. If Native American archaeological, ethnographic, or spiritual resources are involved, all identification and treatment shall be conducted by qualified archaeologists, who are certified by the Society of Professional Archeologists (SOPA) and/or meet the federal standards as stated in the Code of Federal Regulations (36 CFR 61), and Native American representatives, who are approved by the local Native American community as scholars of the cultural traditions.

In the event that no such Native American is available, persons who represent tribal governments and/or organizations in the locale in which resources could be affected shall be consulted. If historic archeological sites are involved, all identified treatment is to be carried out by qualified historical archaeologists.

Discovery of human remains. If a human bone or bone of unknown origin is found during construction, the Contractor shall give immediate notice to the City's Project

Manager, all work shall stop in the vicinity of the find, and the County Coroner shall be contacted immediately. If the remains are determined to be Native American, the Coroner shall notify the Native American Heritage Commission, who shall notify the person most likely believed to be a descendant. The most likely descendant shall work with the City's Project Manager and Contractor to develop a program for re-internment of the human remains and any associated artifacts. No additional work is to take place within the immediate vicinity of the find until the identified appropriate actions have taken place.

3.07 Payment

Full compensation for furnishing all labor, materials, tools, equipment and incidentals and for doing all work involved in performing and complying with these General Requirement items shall be considered as included in the prices paid for in the various contract bid items the Contractor deems appropriate and no additional compensation will be allowed.

END OF SECTION

SECTION 4 – WATER CONSTRUCTION REQUIREMENTS

4.01 AWWA Standards - Water Mains

These Special Provisions contain reference to certain standards of the American Water Works Association (AWWA). Copies of these standards are available for reference at the City of Sacramento, Department of Utilities, Engineering Services Division located at 1395 35th Ave in Sacramento.

IN SUBMITTING A BID, THE CONTRACTOR CERTIFIES THAT HE/SHE IS FAMILIAR WITH FIELD HANDLING, INSTALLATION, INSPECTION, DISINFECTION, PRESSURE TESTING AND ALL OTHER REQUIREMENTS CONTAINED IN THE AWWA STANDARDS.

4.02 Opening Direction of Valves and Fire Hydrants

The opening direction of valves and fire hydrants shall be in accordance with Section 27-7 of the City Standard Specifications.

4.03 Trench Excavation and Backfill

Trench excavation and backfill shall conform to the construction Plans and the provisions of Section 27-3 and 27-8 of the City Standard Specifications.

4.04 Pavement Cutting and Surface Restoration

Surface cutting and restoration shall conform to the following:

Type of material to cut and restore	City Standard Specification
Asphaltic pavement restoration material	Section 22 & 27
Curb, gutter and sidewalk cutting and restoration	Section 24 & 27
Concrete pavement (Alleys and Vee gutters) cutting and restoration	Section 19 & 27

All materials shall conform to Section 10 of the City Standard Specifications.

Existing pavement to be removed shall be ground or saw cut full depth to provide a neat straight pavement break along both sides of the pipe trench. A “T” trench as shown on Standard Drawing W-701 is required. The minimum pavement section within public street right-of-way shall be four (4”) inches of asphalt concrete over twelve (12”) inches of Class 2 aggregate base.

The Contractor, at his/her option, may perform the pavement saw cutting operation after the pipe installation operation, just prior to pavement repair. No pavement

cutting shall precede trenching by more than five calendar days except when saw cutting is used. Where the initial pavement cut is not performed by saw cutting and takes place more than one calendar day before trench excavation, the Contractor shall fill the pavement cuts with asphalt concrete patching mix and maintain a smooth riding surface until trenching begins.

Upon completion of trench backfill, existing pavement as well as any curbs, gutters, sidewalks, driveways, or other improvements that have been cut or damaged as a result of the construction activities shall be replaced. The replacement of pavement, curb, gutter or other improvements shall match that of the original as close as practical unless otherwise indicated on the Plans or in these Special Provisions. Segments of saw cut pavement which were damaged during construction shall be re-saw cut to a neat straight line.

The Contractor shall repair disturbed lawn areas by carefully and evenly cutting the lawn to preserve the sod until the trench excavated for the water service lateral or residential water service is backfilled and compacted. Any existing lawn removed during excavation shall be replaced with sod to match preconstruction conditions. The removed sod may be replaced over the backfilled trench provided the sod is in an acceptable condition for re-use as determined by the Engineer. Sod unsuitable for re-use shall be replaced with new sod to match preconstruction conditions.

All fences or shrubbery in the way of construction shall be removed and replaced. The Contractor may re-use the existing fence material provided the Engineer approves the material, prior to installation. If the Engineer does not approve the re-use of the material, the Contractor shall replace with new material. Any private property or any existing improvements damaged by the construction operations shall be replaced with new materials at no additional cost.

Masonry work damaged as a result of the construction shall be repaired by an experienced brick mason to match existing improvements. Existing bricks shall be salvaged and reused to preserve the integrity of the improvement.

Driveways consisting of exposed aggregate concrete or flat concrete shall be replaced by an experienced concrete finisher to match existing improvements.

4.05 Distribution System Shutdowns for Water Main Installation & Connections

After successful completion of hydrostatic pressure testing and disinfection, the Contractor shall connect the new water mains to the existing water system at the locations indicated on the Plans. Connections to existing water mains shall be made in accordance with Section 27-14 of the City Standard Specifications.

To coordinate and schedule a water main shutdown, Contractor shall provide the Engineer with a project schedule that includes date and location for all required project shutdowns as described in “Construction Activity Time Schedule” of these Specifications. The contractor must provide the inspector updates of this schedule including the shutdown activities before 3:00 PM on the Monday that falls a minimum of 11 days before the shutdown is required. If these coordination requirements are not performed, the City cannot provide the shutdown.

The Contractor shall expose the existing water main at tie-in locations 24 hours prior to a tie-in and have all materials and equipment necessary for the connection work at the job site prior to beginning the shutdown.

The City will not conduct a shutdown until the Contractor is capable of completing the work within a 4 hour period.

Without exception, all opening and closing of the valves on existing water mains will be performed by City crews only.

Where indicated in the Plans, the Contractor shall cut existing pipe, remove existing plugs or bulkheads, clean pipe ends, prepare connections and make the new connection to existing water mains. The Contractor shall temporarily cap existing mains as necessary and as approved by the Engineer to maintain service to City customers.

Water released from cutting or opening existing mains shall be removed and disposed of by the Contractor. The excavation shall be kept dry until all necessary work within the work area has been performed.

4.06 Water Shutdowns for Residential Water Service Tie-Ins

All residential water service shutdowns shall be approved by the Engineer. Residential water service shutdowns for water service connections will be approved once complete preparation, satisfactory to the Engineer, is made to minimize the length of time for any residential water service shutdown.

Maximum time of interruption of water service to any residence or business shall be four (4) hours.

4.07 Plugged Fixtures

The Contractor shall be responsible for removing all sediment that builds up at faucets, sprinklers, and clogs interior house plumbing as a result of installing and connecting residential water services.

The Contractor shall open all exterior faucets and shall attempt to have the homeowner open all interior faucets in order to help prevent fixtures from plugging.

4.08 De-watering

A determination of groundwater level has not been made for this project. The Contractor shall be responsible for the control, removal, and disposal of any groundwater in accordance with Section 27-3 of the City Standard Specifications.

4.09 Payment

No separate payment will be made to the Contractor for complying with the requirements of this section. The cost of such work shall be included in whatever bid item the Contractor deems appropriate.

SECTION 5 – ITEMS OF THE PROPOSAL

Item No. 1 Preconstruction Photographs

This item shall conform to Section 11 of the Standard Specifications.

Payment for preconstruction photographs shall be at the contract lump sum price bid and shall include full compensation for furnishing all labor, materials, tools and equipment, and for performing all work necessary to complete this item in place.

Item No. 2 8-inch Sewer Pipe to Remove, 10-inch Pipe to Place

Where shown on the Plans, VCP and PVC, combination sewer pipe and fittings shall be provided and placed in accordance with the Plans, manufacturers recommendations, and as directed by the Engineer, and shall conform to Sections 10 and 26 of the Standard Specifications. Information regarding pipe material and pipe installation shall be submitted for approval in accordance with these Special Provisions.

Only one type of pipe shall be used between manholes. Prior to the start of work, the Contractor shall submit a plan showing types of pipe and locations to the Engineer. Any deviation in the plan thereafter shall not be allowed unless approved in advance by the Engineer.

Sewer pipe connections to manholes shall be included in this item unless otherwise indicated in these Special Provisions. In addition, Contractor shall connect existing ABS sewer services to new sewer pipe in accordance with these Special Provisions and include this work in the cost of this item.

The Contractor shall install a flexible joint (bell and spigot or flexible coupling) a horizontal distance of 18 inches to 24 inches from the wall of the manhole.

Existing pipe shall be removed at such places as shown on the Plans or as designated by the Engineer in accordance with Section 13 of the Standard Specifications and these Special Provisions. All removed pipes or portions thereof shall be disposed of by the Contractor. Payment for removal and disposal of existing pipe shall be included in these items.
Unless otherwise approved, all pipes shall have bell and spigot joints with elastomeric gaskets providing a water tight seal. Tests for leakage will be required per Section 26-10 of the Standard Specifications.

For all flexible pipe and fittings, the minimum pipe stiffness at 5% deflection shall be 46 PSI according to ASTM test D2412. Flexible pipe joints shall be in accordance with ASTM D3212. All flexible conduits shall be tested with a mandrel 5% smaller than the average inside diameter of the pipe placed no sooner than 96 hours after placement of the backfill. Mandrel tests may be performed by the City after a six (6) month period of

time at which time a maximum deflection of 7-1/2% from the base I.D. will be allowed. The mandrel used shall be the PHOS PVC Sewer Pipe Deflection Gauge or other deflection gauge approved by the Engineer.

After mandrel testing and in order to insure proper placement, all sewer pipes placed shall be CCTV inspected by the Contractor utilizing a robotic CCTV camera device as specified elsewhere in these Special Provisions.

Where shown on the Plans, combined sewer pipe shall conform to the following specifications:

Vitrified Clay Pipe (VCP)

VCP and fittings shall be constructed to the details shown on the Plans and shall conform to the applicable provisions of Section 10, Section 14 and Section 26 of the Standard Specifications.

Poly Vinyl Chloride (PVC) Pipe

PVC gravity sewer pipe and fittings shall be constructed to the details on the Plans and shall conform to Sections 10, 14, and 26 of the Standard Specifications and these Special provisions. PVC gravity sewer pipe and fittings shall conform to ASTM D3034 and ASTM F679 and shall be SDR 35 with Elastomeric - Gasket joints providing a watertight seal. **PVC pipe manufactured by JM Pipe or PW Eagle Pipe will not be allowed.**

Surface restoration shall be in accordance with the section of the General Requirements entitled “Pavement Cutting and Surface Restoration” and shall be paid for under this item of the contract. Pavement cutting shall be perpendicular and parallel to the centerline of the road. Pavement section shall match existing section.

Payment shall be at the unit price bid per lineal foot of proposed combined sewer main installed and shall include full compensation for furnishing all labor, materials, tools, equipment and incidentals and for doing all work necessary to complete this item in place including pavement cutting and removal, trenching, furnishing and placing pipe, backfilling, removing or abandoning existing pipe, connecting sewer pipe to manholes, removing inside drop connections, testing, and repaving or other surface restoration.

Item No. 3 Manhole to Remove and Manhole No. 3 to Construct

Existing manholes and catch basin manholes shall be removed and a Manhole No. 3 shall be constructed where shown on the plans or directed by the Engineer in conformance with Section 25 and Section 38 of the Standard Specifications. Eccentric cones shall not be used unless specified on the Plans or by the Engineer. If eccentric cone is used, vertical face of cone shall be parallel to flow and away from traffic (closest to the nearest curb.)

The existing manhole shall be disposed of away from the site of the project. Excavation shall conform to Section 14-2, Structure Excavation of the Standard Specifications. The existing frame and cover shall be cleaned of all foreign material and delivered to the City of Sacramento Corporation Yard, Division of Field Services, 5730 24th Street, Attention: Rob Jack, Sewer Superintendent (916) 808-4022.

Flowline material for main pipe and intersecting mains shall be vitrified clay except: if manhole base is precast concrete; or if manhole base is placed over main which is "laid through", in which case flowline material shall be same as main. Clay liner may be omitted for manholes with mains of 36- inch diameter and larger. Flow line material shall conform to the Standard Specifications and these Special Provisions. New flowline shall match inlet and outlet pipe elevations and shall extend to inside face of manhole. If inlet and outlet pipes are of different sizes, new flowline pipe size shall match larger pipe size.

Manhole bench shall slope upwards from the spring-line of the pipe to the projected level of the crown of the pipe at the manhole wall or twelve (12) inches above the spring-line, whichever is less. All holes, cracks, and seams shall be grouted flush using nonshrink grout with the manhole interior. Non-shrink grout shall be "Metallic Grouting Compound" by Burke, "Embeco" by Master Builders, "Ferrolith-G" by Sonneborn-Desoto, or approved equal. All internal surfaces shall have a smooth finish.

External Manhole Seal - External joint of each barrel section and of the barrel/cone connection shall be sealed with an external rubber sealing sleeve as manufactured by Infi-Shield Inc. or equal. The seal shall be made of neoprene and EPDM rubber and have a minimum thickness of 60 mils. Material shall conform to specifications of ASTM C923, ASTM C443, and ASTM F477. Rubber seal shall be attached to manhole using a non hardening butyl rubber mastic applied to the top and bottom of sleeve in accordance with manufacturer's instructions. Seal shall overlap joint a minimum of 3-inches and shall be continuous around the perimeter of the barrel section and overlapped 6-inches minimum.

At the discretion or option of the Engineer, manhole testing shall be performed by the Contractor in accordance with Section 25-3.

Surface restoration shall be in accordance with the section of the General Requirements entitled "Pavement Cutting and Surface Restoration" and shall be paid for under this item of the contract. Pavement section shall match existing section.

Pavement cutting shall be perpendicular and parallel to the centerline of the road.

Payment shall be at the unit price bid per each and shall include full compensation for furnishing all labor, materials, tools and equipment and for performing all work necessary to complete this item in place.

Item No. 4 <u>Existing Sewer Service, to Replace</u>

Four and six inch lateral sewer services shall be replaced as indicated on the Plans and shall be constructed to the requirements of Sections 10, 26, and 38 of the Standard Specifications. The new sewer service shall match existing in size. All sewer services shall be acrylonitrile-butadiene-styrene (ABS) and constructed as shown on the ABS Sewer Service Detail S-260 in Appendix A. Cleanouts shall be placed as shown on the Typical Sewer Service Cleanout Locations Detail S-265 in Appendix A. Services shall be connected to sewer mains using tees or insert-a-tees when the sewer main is 8-inches in diameter or greater. When connecting to a 6-inch sewer main, insert-a-tees will not be allowed. Cast iron fittings will not be allowed. Under no circumstances shall grouted connections be acceptable.

The number and location of lateral sewer services shown on the Plans are based on CCTV inspection. The inspection identified openings in the sewer main that may or may not consist of live sewer services. Only live services shall be replaced. The Engineer shall differentiate between the active and abandoned service connections after they are exposed by the Contractor. All abandoned service connections shall be plugged and sealed as covered elsewhere in these Special Provisions.

New services shall be installed perpendicular to the main. The layout of services shown on the Plans is diagrammatic only. Final layout of new services and cleanouts will be determined by the Engineer as follows: After exposure of service connection at main by Contractor, Engineer will trace layout of existing service line and proposed location of cleanout. The Contractor will coordinate this work with the Engineer a minimum of two (2) working days in advance of placing new services.

The operations of the Contractor shall not result in any interruption of sewer service to any building being served by the sewer main. The replacement of the sewer service shall be accomplished within the same day that work is started. The Contractor shall provide, at no extra cost to the City, whatever equipment, materials, labor and services are necessary to ensure that the sewer service is maintained consistent with this requirement including, if necessary, the installation of temporary lines, temporary pumping equipment, and night-time or other overtime work as may be required.

When connecting a service to an existing manhole, the service shall be installed above the base of the manhole such that no alteration of the manhole base is required, unless otherwise approved by the Engineer. If the service enters a manhole near the invert of the MH flow channel, the service shall be channelized in the MH bench with vitrified clay pipe, shaped to provide a smooth transition into the main flow channel. If the service enters a manhole more than 1.5 feet above the spring-line of the pipe forming the manhole channel, an inside drop connection shall be constructed from the incoming service to one (1) foot above the spring-line of the pipe forming the channel at no additional cost to the City.

The quantity of sewer services to be replaced shown on the Proposal is for bidding purposes only. The unit price indicated for existing sewer services to be replaced will

not be adjusted because the actual number of required sewer services varies from the quantity shown on the Plans and in the Proposal.

Surface restoration shall be in accordance with the section of the General Requirements entitled “Pavement Cutting and Surface Restoration” and shall be paid for under this item of the contract. Pavement section shall match existing section.

Payment shall be at the unit price bid for each sewer service removed and placed and shall include full compensation for furnishing all labor, materials, tools and equipment and for performing all work necessary to complete this item in place.

Item No. 5 8-Inch Diameter Water Main to Furnish and Install

This item shall consist of furnishing and placing water main pipe, fire hydrant leads, elbows and fittings at the locations, to the alignments and to the details shown on the Plans.

This item shall also include furnishing and installing elbows to change the horizontal and vertical alignment of the proposed water main to avoid conflicts with existing underground utilities or to maintain proper depth of bury through vertical curves.

From Sta 0 + 44.12 to Sta 1 + 75 the water main shall be installed with 30-inches of cover and pipe material shall be Ductile Iron. Remaining of main can vary from 30-inches to 48 inches of cover and shall also be Ductile Iron. Materials and placement shall meet the applicable requirements of Sections 10, 27, and 38 of the City Standard Specifications and these Special Provisions.

Surface restoration associated with this item shall be performed as specified elsewhere in these Special Provisions and paid for under this item. The Contractor shall restore surfaces in kind unless otherwise specified on the Plans or in these Special Provisions. Pavement cutting and restoration shall conform to the provisions of the City Standard Specifications and these Special Provisions. Striping and speed bump replacement, concrete, landscaping, asphaltic concrete, or any other material replacement encountered, shall be included in this item.

Payment shall be at the contract unit price bid per linear foot of water main furnished and installed and shall include full compensation for furnishing all labor, materials, tools and equipment, and for performing all work necessary to complete this item in place.

Item No. 6 8-Inch Diameter Gate Valve to Furnish and Install

This item shall consist of furnishing and installing gate valves, including gate valve boxes, at the locations indicated on the Plans and in conformance with the applicable requirements of Sections 10, 27, and 38 of the City Standard Specifications and these Special Provisions. This item shall include furnishing and installing gate valves on the standard hydrant lead.

Surface restoration associated with this item shall be performed as specified elsewhere in these Special Provisions and paid for under this item.

Payment shall be at the contract unit price bid for each gate valve furnished and installed and shall include full compensation for furnishing all labor, materials, tools and equipment, and for performing all work necessary to complete this item in place.

Item No. 7 Reconnecting Existing Metered Water Service

This item shall consist of reconnecting an existing metered water service to the new water main. This item includes the furnishing and installation of a saddle and corporation stop. The contractor shall intercept the existing water service and reconnect it to the new corporation stop using Type K copper water pipe. The water services and their installation shall meet the applicable requirements of Sections 10, 27, and 38 of the City Standard Specifications and these Special Provisions. See detail in Appendix A. Contractor shall turn off existing corporation stop.

All USA markings identifying water features will be verified by the Contractor. All costs associated with this work including all re-work if the USA markings are found to be incorrect shall be included in this item.

Information regarding existing service location shall be supplied to the City ten (10) working days prior to placing the saddle and/or constructing the service.

The Contractor shall reconnect the existing water service to the new water main so that the customer's water service is in service when this item is complete.

Surface restoration associated with this item shall be in accordance with the section of the Water Construction Requirements of these Special Provisions, entitled "Pavement Cutting and Surface Restoration" and shall be paid for under this item of the contract. Pavement cutting shall be perpendicular and parallel to the centerline of the road. The Contractor shall saw cut, repair or replace existing curb, gutter, sidewalk, driveway, alley or street surface, provide new sod, shrubbery, fencing, and repair or replacement of existing improvements on private property that may be damaged as a result of the reconnection of existing water meter.

The quantities for this bid item are for bidding purposes only. The unit price indicated will not be adjusted because the actual number of water meters reconnected may vary from the quantity shown on the plans.

Payment shall be at the contract unit price bid for each existing water meter that is reconnected to the new main and shall include full compensation for furnishing all labor, materials, tools and equipment, and for performing all work necessary to complete this item in place.

Item No. 8 Existing Valves, Tees, Saddles and Water Mains to Remove or Abandon

This item shall consist of disconnecting existing taps and removing or abandoning existing valves, tees, saddles and water mains as indicated on the Plans or as directed by the Engineer in accordance with these Special Provisions.

All abandoned taps from live mains shall be removed such that no protrusions remain. The method of abandoning the mains depends on the type of existing pipe. Asbestos-cement, steel, and cast iron pipe shall be plugged with two (2) feet of concrete. Steel pipe shall be abandoned by welding 1/4-inch thick steel plate on cut ends. Use of a restrained MJ cap to abandon steel main, rather than welding, in the event that valve shutdown does not effect a positive shutdown will be subject to Engineer approval and shall continue to be paid under this item.

Cut pipe removed during this procedure shall become the property of the Contractor and shall be disposed of at the Contractor's expense.

Removal of existing valves shall include removing all appurtenances associated with the valve including, but not limited to, risers, valve boxes and lids.

All items to be removed as indicated on the Plans shall become the property of the Contractor and shall be disposed of at the Contractor's expense.

Payment shall be at the contract lump sum and shall include full compensation for furnishing all labor, materials, tools and equipment, and for performing all work necessary to complete this item in place.

Item No. 9 <u>CCTV Inspection</u>

All newly-constructed combined sewer pipes shall be inspected by the Contractor utilizing a remote closed circuit in-line television (CCTV) camera in accordance with Section 3.04 of these Special Provisions.

<u>Payment</u> shall be at the unit price bid per lineal foot of proposed combined sewer pipe inspected and shall include full compensation for furnishing all labor, materials, tools and equipment and for performing all work necessary to complete this item in place.

Item No. 10 <u>Connection to Existing Water Distribution System</u>

This item shall consist of connecting the new water main to the existing water distribution main at the locations indicated, to the details shown on the Plans and in accordance with Section 27-14 of the City Standard Specifications.

The Contractor shall pothole tie-in locations to locate existing water mains.

The Contractor shall furnish and install fittings, restraints and pipe necessary to connect mains. When cutting into an existing main, up to 15 feet of new pipe may be required for

each tie-in. The Contractor shall use 45 degree (maximum) elbows to match existing pipe elevations, which shall be installed in accordance with Standard Drawing W-103 of the City Standard Specifications.

Surface restoration associated with this item shall be performed as specified elsewhere in these Special Provisions and paid for under this item.

Payment shall be at the contract unit bid price for each connection to the existing water distribution system and shall include full compensation for furnishing all labor, materials, tools and equipment, and for performing all work necessary to complete this item in place.

Item No. 11 <u>Unsuitable Material, Removal and Replacement</u>

This item shall consist of furnishing all labor, equipment and materials to remove and replace unsuitable materials in accordance with the requirements in Section 14-8 and 26-5 of the City Standard Specifications, these Special Provisions, and as directed by the Engineer. Whenever the bottom of the trench is, in the opinion of the Engineer, unsuitable as a foundation for pipe bedding, the foundation shall be treated in accordance with Section 26-5 of the Standard Specifications. Unsuitable material is generally defined as material the Engineer determines to be:

1. Of such unstable nature as to be incapable of being compacted to specified density using ordinary methods at or near optimum moisture content; or
2. Too wet to be properly compacted and circumstances prevent processing or in-place drying prior to incorporation into the work; or
3. Containing visible or excessive deleterious material; or
4. Otherwise unsuitable for planned use.

Trench backfill shall consist of Class 2 Aggregate Base (AB) or job excavated, native soil meeting the requirements of Section 26-5 of the Standard Specifications. The use of the job excavated, native soil shall be at the Contractors risk. No additional compensation will be paid to the Contractor for hauling, stockpiling, drying, wetting or any processing of the native soil or AB required to achieve the minimum stability and relative compaction criteria.

Excavated unsuitable material shall be the property of the Contractor and shall be disposed of away from the project site. For offsite disposal, the Contractor shall have written permission from the owner upon whose property the disposal is to be made before any material is deposited thereon.

The quantity shown in the Proposal for this item shall be considered approximate. No guarantee is made or implied that the quantity will not be reduced, increased, or deleted as may be required by the Engineer. This item has been included in the proposal in anticipation of encountering unsuitable material during pipe backfill or subgrade preparation. If no unsuitable material is excavated, then this item will be deleted.

Measurement for payment for excavation of unsuitable material and placement of clean crushed rock, “pit run”, cobbles, Class 2 aggregate base or any approved combination thereof shall be based upon the weight of material placed less the weight of moisture content.

Payment shall be at the unit price bid per ton of unsuitable material replaced and shall include full compensation for furnishing all labor, materials, tools and equipment and for performing all work necessary to complete this item in place.

Item No. 12 Pipe ends to Plug

Existing sewer services encountered during construction and not proposed for replacement shall be plugged per Section 13-3 of the Standard Specifications.

The quantity of pipe ends to plug shown on the Proposal is for bidding purposes only. The unit price indicated for pipe ends to be plugged will not be adjusted because the actual number of pipe ends required to be plugged varies from the quantity shown on the Plans and in the Proposal.

Payment shall be at the unit price bid per each plugged pipe end and shall include full compensation for furnishing all labor, materials, tools and equipment and for performing all work necessary to complete this item in place.

Item No. 13 Modified Type B Drain Inlet to Construct

Modified Type B Drain Inlets shall conform to Sections 20, 24, 30 and 38 of the Standard Specifications.

Drain inlets shall be precast or cast in place, formed using wood or metal forms. Hand forming of concrete will not be allowed. If cast in place, maximum wall thickness shall be 8-inches.

The grate shall conform to Section 38 of the Standard Specifications. The grate shall be installed so that either end of the grate can be lifted from the frame and removed by pulling parallel to the curb. The grate frame shall be installed between ½ and 1 inch from the face of the open back hood. All joints and all connections between the hardware (grate and hood) and the vertical walls of the drain inlet shall be grouted smooth with a light broom finish or equivalent.

The open back hood shall be cast iron or approved equal.

The vertical distance between the grate and the top of the hood shall be a minimum of 5-inches and a maximum of 8-inches. If the top of the hood must be placed below the top of curb, there shall be a minimum 3-inch cover of concrete. One Number 4 reinforcing bar shall be placed in the concrete and shall extend twelve (12) inches on both sides of the hood. If the top of the hood is placed flush with the top of curb, the

Contractor shall embed hood in a concrete curb a minimum thickness of four (4) inches and extending six (6) inches beyond both ends of the hood.

Drain lead shall be connected to drain inlet with approved waterstop cast into side wall with non-shrink grout. Waterstop shall have a minimum of two (2) inches of embedment on all sides.

This item shall include the removal of existing gutter drains to be replaced. The existing grates shall be cleaned of all foreign material and delivered to the City of Sacramento Corporation Yard, Division of Field Services, 5730 24th Street, Attention: Rob Jack, Sewer Superintendent (916) 808-4022.

Curb and gutter reconstruction shall match existing geometry and, at the Engineers discretion, extend up to five (5) feet in length on either side of the inlet. The cost of curb and gutter reconstruction shall be included in the unit price for this item.

Surface restoration shall be in accordance with the section of the General Requirements entitled "Pavement Cutting and Surface Restoration." Pavement cutting shall be perpendicular and parallel to the centerline of the road. Surface restoration due to drain inlet removal and installation shall be paid for as part of this item.

Payment shall be at the unit price bid per each Modified Type B drain inlet placed and shall include full compensation for furnishing all labor, materials, tools and equipment and for performing all work necessary to complete this item in place.

Item No. 14 10-inch Drain Lead to Install

Where shown on the Plans, 10-inch diameter drain inlet leads shall be polyvinyl chloride (PVC).

Drain lead connections to manholes shall be included in this item unless otherwise indicated in these Special Provisions.

Drain inlet lead and fittings shall be constructed to the details on the Plans and shall conform to Sections 10, 14, and 26 of the Standard Specifications and these Special provisions. PVC gravity sewer pipe and fittings shall conform to ASTM D3034 and shall be SDR 35 with elastomeric gasket joints providing a watertight seal per ASTM D3212. Minimum pipe stiffness at 5% deflection shall be 46 PSI according to ASTM test D2412. Pipe shall be subject to deflection tests as specified elsewhere in these Special Provisions.

C-900 PVC for pipe and fittings shall be utilized for any pipe that has less than eighteen (18) inches of cover between the top of the installed pipe and the finish grade. If the depth of cover is less than twelve (12) inches, the Contractor shall encase pipe with controlled density fill as specified elsewhere in these Special Provisions. When the Engineer approves shallow placement of drain inlet leads requiring protective measures proposed by Contractor, all work associated with protective measures shall be

considered as extra and paid per Section 8 of the Standard Specifications.

When connecting to a manhole:

A. The Contractor shall install a flexible joint (bell and spigot or flexible coupling) a horizontal distance of 18 inches to 24 inches from the wall of the manhole.

B. All connections to the manholes not cast as part of the base shall be made by use of a coring machine and a "Kor-N-Seal" or approved equal flexible watertight coupling. The incoming pipe shall be cut, and the space between the inserted pipe and the seal shall be grouted smooth.

After mandrel inspection, the DI leads placed will be CCTV inspected by the Contractor utilizing a robotic CCTV camera device as specified elsewhere in these Special Provisions.

This item shall also include the removal or abandonment of existing drain leads. Contractor shall remove abandoned pipe that is less than two (2) feet from the finished surface. If pipes are deeper than two (2) feet from the finished surface, it is the Contractor's option to remove or abandon existing leads per Standard Specification 13-3. All pipe removed shall become the property of the Contractor and disposed of away from the project site. Pipe ends plugged per this section shall be paid for under the Pipe ends to Plug Bid Item. The existing drain grates shall be cleaned of all foreign material and returned to the City of Sacramento Corporation Yard, Division of Field Services, 5730 24th Street, Attn: Rob Jack, Sewer Superintendent (916) 808-4022.

The lead invert elevations shown on the Plans are approximate only. It shall be the Contractor's responsibility to determine the final vertical alignment by means of locating potential conflicts prior to construction of the drain inlet, lead, or coring of the manhole. No deflections will be allowed in the lead unless otherwise approved by the Engineer. Guidelines for final profile of drain lead are as follows: The distance from the grate elevation to the top of the drain inlet base shall be between 4'-8" and 5' unless otherwise shown on the Plans or directed by the Engineer. The drain lead shall have a minimum slope of 0.01 ft/ft unless otherwise approved by the Engineer. Lead traps may be moved away from the drain inlet, if approved by the Engineer, to avoid conflicts with crossing utilities. Unless otherwise stated herein, no additional compensation shall be paid to the Contractor for potholing, or altering drain inlet or lead elevations.

Surface restoration shall be in accordance with the section of the General Requirements entitled “Pavement Cutting and Surface Restoration” and shall be paid for under this item of the contract.

<u>Payment</u> shall be at the unit price bid per lineal foot of 10-inch drain lead placed and shall include full compensation for furnishing all labor, materials, tools and equipment and for performing all work necessary to complete this item in place including pavement cutting and removal, trenching, furnishing and placing pipe, backfilling, removing existing pipe, connecting sewer pipe to manholes, testing, and repaving or other surface

restoration.

END OF SPECIAL PROVISIONS

APPENDIX A

1. Cast Iron Cleanout Assembly Detail
2. Typical Sewer Service Cleanout Locations Detail S-265
3. ABS Sewer Service Detail S-260
4. Backfill & Resurfacing Detail T-80A
5. Reconnecting Existing Metered Water Service

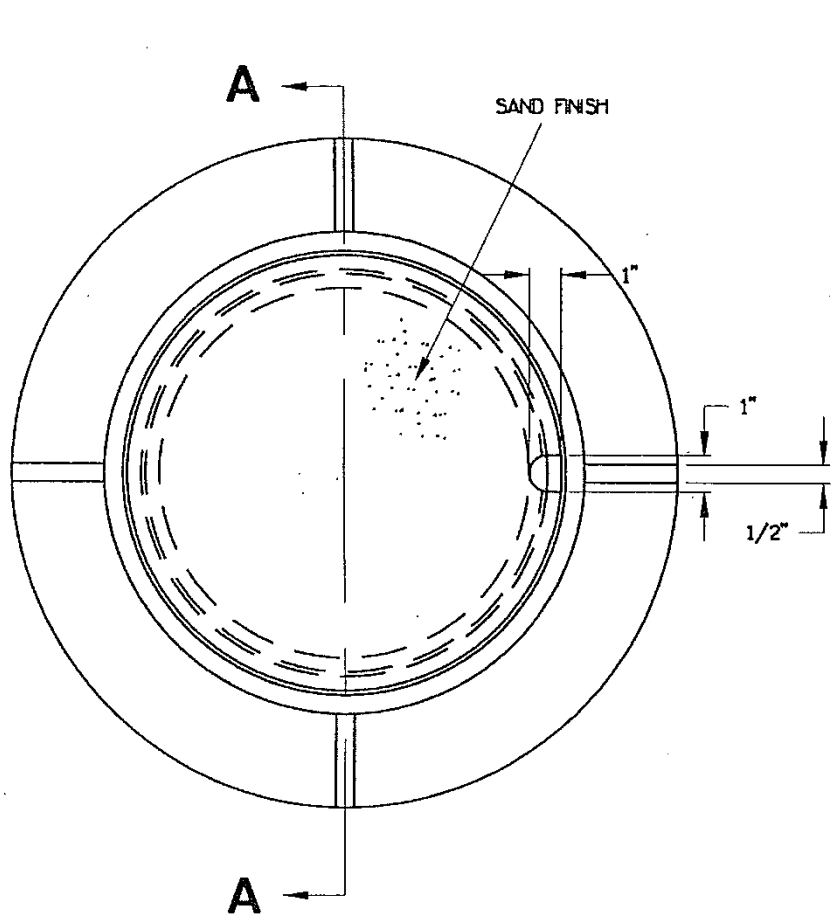

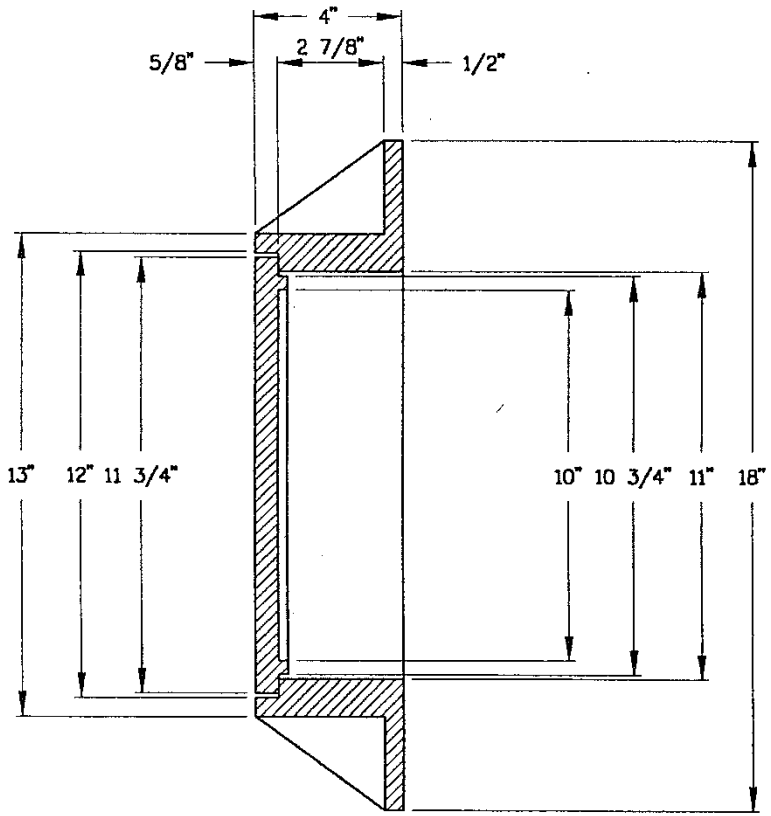

SECTION A–A

CAST IRON CLEANOUT ASSEMBLY

REVISION DATE: MAY 14, 1997

CITY OF SACRAMENTO

DEPARTMENT OF UTILITIES

APPROVED BY: R. BATHA NO SCALE

DRAWN BY: B. GRANT DWG. NO.: A–1

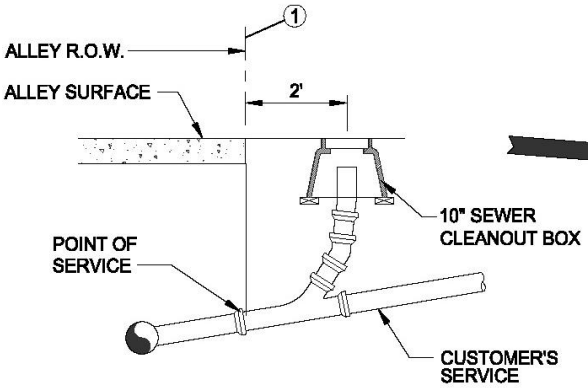

① — IF BUILDING IS ON R.O.W. LINE, CONSTRUCT CLEANOUT WITHIN 2' OF FACE OF BUILDING. △1

ALLEY TAP

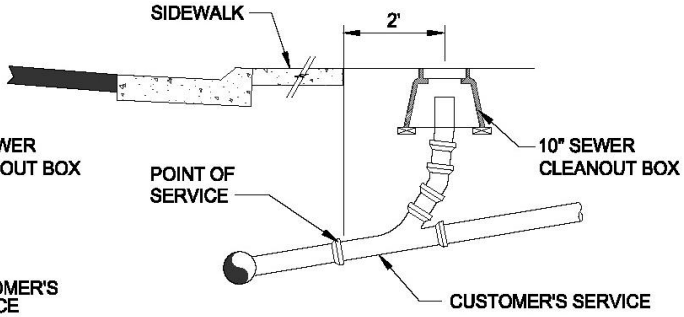

STREET TAP WITH SIDEWALK

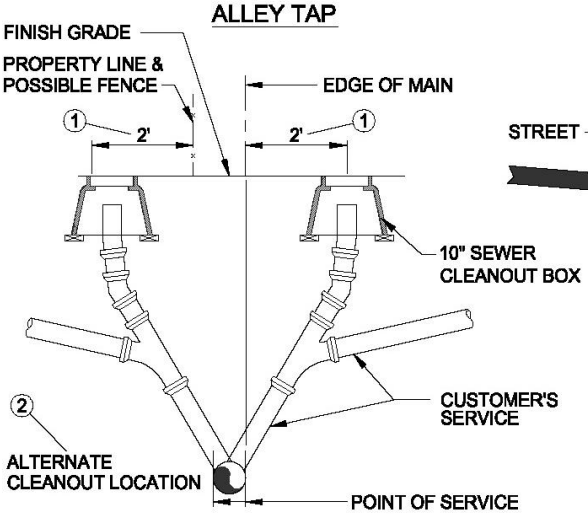

① — WHEN APPLICABLE, ADJUST CLEANOUT LOCATION TO AVOID CONFLICT WATER MAIN. △1

② — USE ALTERNATE CLEANOUT LOCATION WHEN MAIN IS LOCATED OUTSIDE PROPERTY LINE. △1

EASEMENT TAP

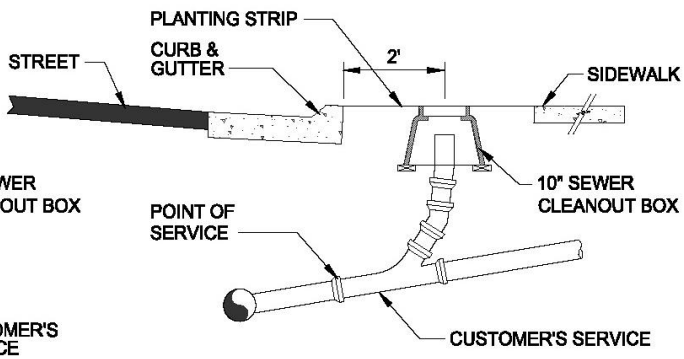

STREET TAP WITH PLANTING STRIP

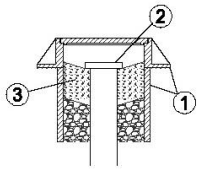

① — CAST-IRON CLEAN-OUT AND COLLAR ASSEMBLY

② — 4" OR 6" DIA. MECHANICAL WING NUT PLUG, CHERNE INDUST., OR APPROVED EQUAL. (PROVIDE 3" CLEARANCE BETWEEN TOP OF CAP AND BOTTOM OF COVER)

③ — GROUT 2" THICK MINIMUM, SLOPE TO TOP OF PIPE.

CAST-IRON CLEAN-OUT BOX

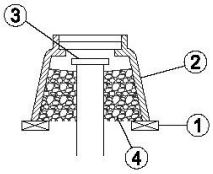

① — PROVIDE 2" x 3" x 8" REDWOOD, PRESSURE TREATED OR MASONARY SUPPORT.

② — 10" SEWER CLEAN-OUT BOX WITH LOCK BOLT FLUSH COVER (GREEN COLOR) CARSON IND. MODEL NO. 910-10 OR APPROVED EQUAL.

③ — 4" OR 6" DIA. MECHANICAL WING NUT PLUG, CHERNE INDUST., OR APPROVED EQUAL. (PROVIDE 3" CLEARANCE BETWEEN TOP OF CAP AND BOTTOM OF COVER)

④ — BACKFILL IN CONFORMANCE WITH SEC. 26 OF THE STD. SPECS.

CARSON BOX

NOTES:

1. CLEANOUTS LOCATED IN NON-TRAVELED WAY SHALL HAVE 10" SEWER CLEANOUT BOX WITH LOCK BOLT FLUSH COVER (GREEN COLORED). CARSON IND. MODEL No. 910-10 OR APPROVED EQUAL.
2. CLEANOUTS IN TRAVELED WAY SHALL HAVE CAST IRON CLEANOUT BOX AS SHOWN ABOVE. △1

REV.	DATE	DESCRIPTION
△1	03-23-09	Noted
△		
△		

CITY OF SACRAMENTO DEPARTMENT OF UTILITIES	TYPICAL SEWER SERVICE CLEANOUT LOCATIONS	APPR'D BY: D. Bl NO SCALE DATE: MAY 2007 DWG. NO. S - 265

R:\Utilstds\City_Std_Details\Sewer_Drainage\S_265_TypSewerService.dwg

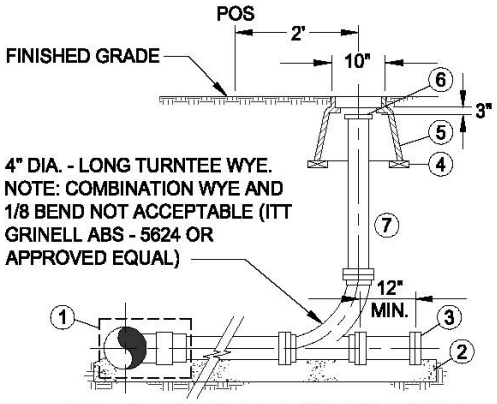

4" DIA. - SERVICE SLOPE LESS THAN 1 1/4"/FT

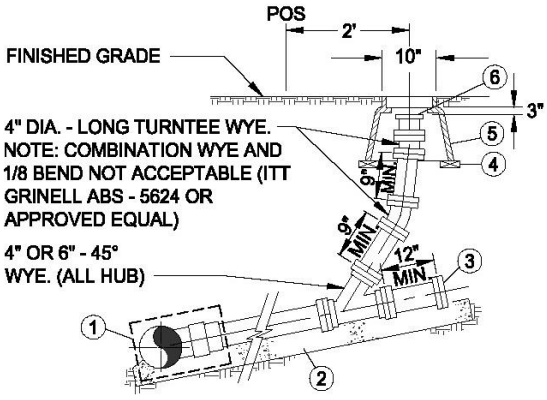

4" DIA. - SERVICE SLOPE GREATER THAN 1 1/4"/FT
6" DIA. - ALL SLOPES

1 — SEE "CONNECTION DETAIL."
2 — CRUSHED ROCK BEDDING; SEE STD. SPEC., SECTION 26.
3 — 4" OR 6" DIA. ABS SLIP CAP.
4 — PROVIDE 2" x 3" x 6" REDWOOD, PRESSURE TREATED OR MASONARY SUPPORT.
5 — 10" SEWER CLEAN-OUT BOX WITH LOCK BOLT FLUSH COVER (GREEN COLOR) CARSON IND. MODEL NO. 910-10 OR APPROVED EQUAL.
6 — 4" OR 6" DIA. MECHANICAL WING NUT PLUG, CHERNE INDUST., OR APPROVED EQUAL SECURE WITH A LOOSE FIT AND PEEN END OF BOLT OR OTHERWISE SCORE THREADSTO PREVENT REMOVAL OF WING NUT.
7 — BACKFILL IN CONFORMANCE WITH SEC. 26 OF THE STD. SPECS.

A.B.S. SEWER SERVICE WITH CLEANOUT BOX

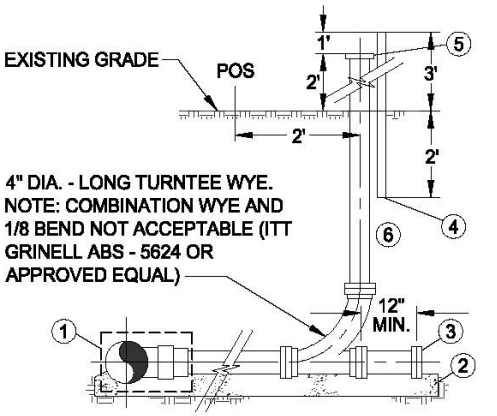

4" DIA. - SERVICE SLOPE LESS THAN 1 1/4"/FT

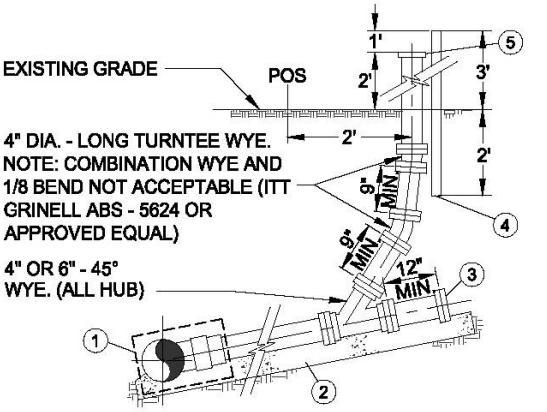

4" DIA. - SERVICE SLOPE GREATER THAN 1 1/4"/FT
6" DIA. - ALL SLOPES

1 — SEE "CONNECTION DETAIL."
2 — CRUSHED ROCK BEDDING; SEE STD. SPEC., SECTION 26
3 — 4" OR 6" DIA. ABS SLIP CAP.
4 — 2" x 4" x 5' REDWOOD OR APPROVED EQUAL PAINTED GREEN ON THE TOP 12".
5 — 4" OR 6" WELD-ON ABS OR APPROVED EQUAL CAP.
6 — BACKFILL IN CONFORMANCE WITH SEC. 26 OF THE STD. SPECS.

A.B.S. SEWER SERVICE WITHOUT CLEANOUT BOX

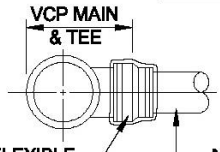

4" OR 6" - FLEXIBLE COUPLING, FERNCO OR APPROVED EQUAL NO BUSHINGS ACCEPTABLE

4" OR 6" DIA. - ASTM D 2661 ABS - DWV (SCHEDULE 40).

V.C.P. SEWER MAIN

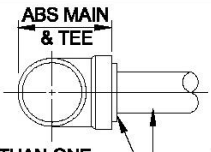

NOT MORE THAN ONE ADAPTER OR BUSHING PERMITTED AT EACH CONNECTION.

4" OR 6" DIA. - ASTM D 2661 ABS - DWV (SCHEDULE 40).

A.B.S. SEWER MAIN

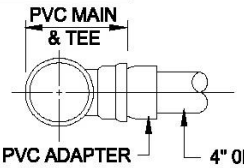

4" OR 6" - PVC ADAPTER BY "INSERTA TEE" OR APPROVED EQUAL.

4" 0R 6" DIA. - ASTM D 2661 ABS - DWV (SCHEDULE 40).

P.V.C. SEWER MAIN

CONNECTION DETAIL

REV.	DATE	DESCRIPTION

CITY OF SACRAMENTO
DEPARTMENT OF UTILITIES

A.B.S. SEWER SERVICE

APPR'D BY: D O'Brien NO SCALE
DATE: MAY 2007 DWG. NO. S - 260

R:\Utilstds\City_Std_Details\Sewer_Drainage\S_260_ABS_SewerService.dwg

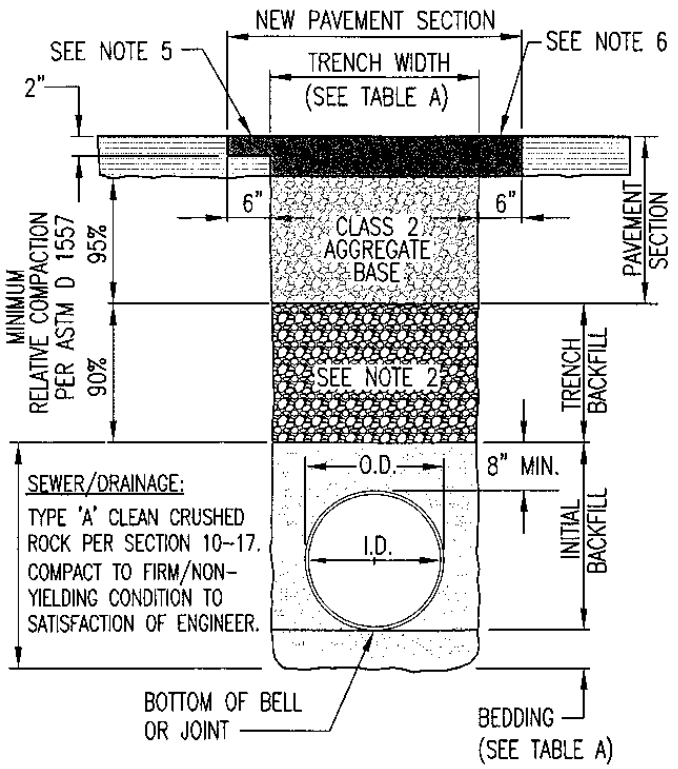

TYPICAL TRENCH SECTION

TABLE A			
TRENCH WIDTHS			
PIPE TYPE	PIPE I.D.	MINIMUM DIMENSION	MAXIMUM DIMENSION (4)
RIGID (1)	≤12"	PIPE O.D. + 16"	PIPE O.D. + 24"
	>12"	PIPE O.D. + 20"	PIPE O.D. + 36"
FLEXIBLE (2)	ALL	PER ASTM D2321 (3) OR THE PIPE MANUFACTURER'S RECOMMENDATIONS, WHICHEVER IS GREATER.	
MINIMUM BEDDING BELOW PIPE BELL OR JOINT			
ALL	≤12" >12" to 21" >21"	3" 4" 6"	NONE

(1) RIGID PIPE = RCP, VCP & DIP.
(2) FLEXIBLE PIPE = ALL PIPE OTHER THAN RIGID PIPE.
(3) ASTM D2321 STATES THAT THE MINIMUM TRENCH WIDTH SHALL BE EQUAL TO THE PIPE O.D. PLUS 16" OR THE PIPE O.D. TIMES 1.25, PLUS 12", WHICHEVER IS GREATER.
(4) IF THE MAXIMUM DIMENSION AT THE TOP OF THE PIPE IS EXCEEDED, THE CONTRACTOR SHALL PROVIDE STRONGER PIPE OR IMPROVED BEDDING AND BACKFILL CONDITIONS, AS APPROVED BY THE ENGINEER TO MEET THE CHANGED LOAD REQUIREMENTS.

NOTES:

1. ALL EXCAVATION, BACKFILL AND PAVING OF TRENCHES SHALL CONFORM TO THE REQUIREMENTS OF THE STANDARD SPECIFICATIONS UNLESS OTHERWISE INDICATED ON THE PLANS, PERMIT, SPECIAL PROVISIONS, OR AUTHORIZED BY THE ENGINEER.
2. TRENCH BACKFILL SHALL CONSIST OF CLASS 2 AGGREGATE BASE (AB) OR JOB EXCAVATED, NATIVE SOIL MEETING THE REQUIREMENTS OF SECTION 26-5 OF THE STANDARD SPECIFICATIONS. NO ADDITIONAL COMPENSATION SHALL BE PAID TO THE CONTRACTOR FOR STOCKPILING, DRYING, WETTING OR ANY PROCESSING OF THE NATIVE SOIL OR AGGREGATE BASE REQUIRED TO ACHIEVE THE MINIMUM STABILITY AND RELATIVE COMPACTION CRITERIA.
3. UNLESS OTHERWISE INDICATED IN THE SPECIAL PROVISIONS, THE PERMANENT PAVEMENT SHALL CONFORM TO THE TYPE AND THICKNESS OF THE PAVEMENT REMOVED. IN NO CASE SHALL THE ASPHALT CONCRETE (AC) PAVEMENT SECTION BE LESS THAN FOUR INCHES (4") OF AC ON TWELVE INCHES (12") OF CLASS 2 AGGREGATE BASE (AB).
4. EXISTING PAVEMENT SHALL BE SAWCUT AND REMOVED IN SUCH A MANNER SO AS NOT TO TEAR, BULGE OR DISPLACE ADJACENT PAVEMENT. SAWCUT EDGES SHALL BE CLEAN AND VERTICAL WHEN PRACTICAL. ALL SAWCUTS SHALL BE PARALLEL AND PERPENDICULAR TO STREET CENTERLINE.
5. WHEN THE EXISTING AC IS GREATER THAN 4" THICK, GRIND EXISTING AC 2" DEEP AND 6" WIDER THAN TRENCH WIDTH. PLACE AC AS SHOWN ON BOTH SIDES.
6. WHEN THE EXISTING AC IS 4" OR LESS THICK, SAW CUT AND PLACE PAVEMENT 6" WIDER THAN TRENCH AS SHOWN ON BOTH SIDES.
7. GROUNDWATER ENCOUNTERED IN THE COURSE OF EXCAVATION AND BACKFILLING TRENCHES SHALL BE CONTROLLED, REMOVED AND DISPOSED OF IN ACCORDANCE WITH SECTION 26-2 OF THE STANDARD SPECIFICATIONS.
8. NO SOLID BLOCKING IS PERMISSIBLE BENEATH PIPE.
9. JETTING BACKFILL IS NOT PERMITTED.

REV.	DATE	DESCRIPTION
△		
△		
△		

R:\Utilstds_New_Std_Details\Fields_Details_O&M

CITY OF SACRAMENTO DEPARTMENT OF UTILITIES	BACKFILL AND RESURFACING IN ASPHALT CONCRETE PAVEMENT AREAS	APPR'D BY: D. Bart NO SCALE DATE: DWG. NO. T - 80A

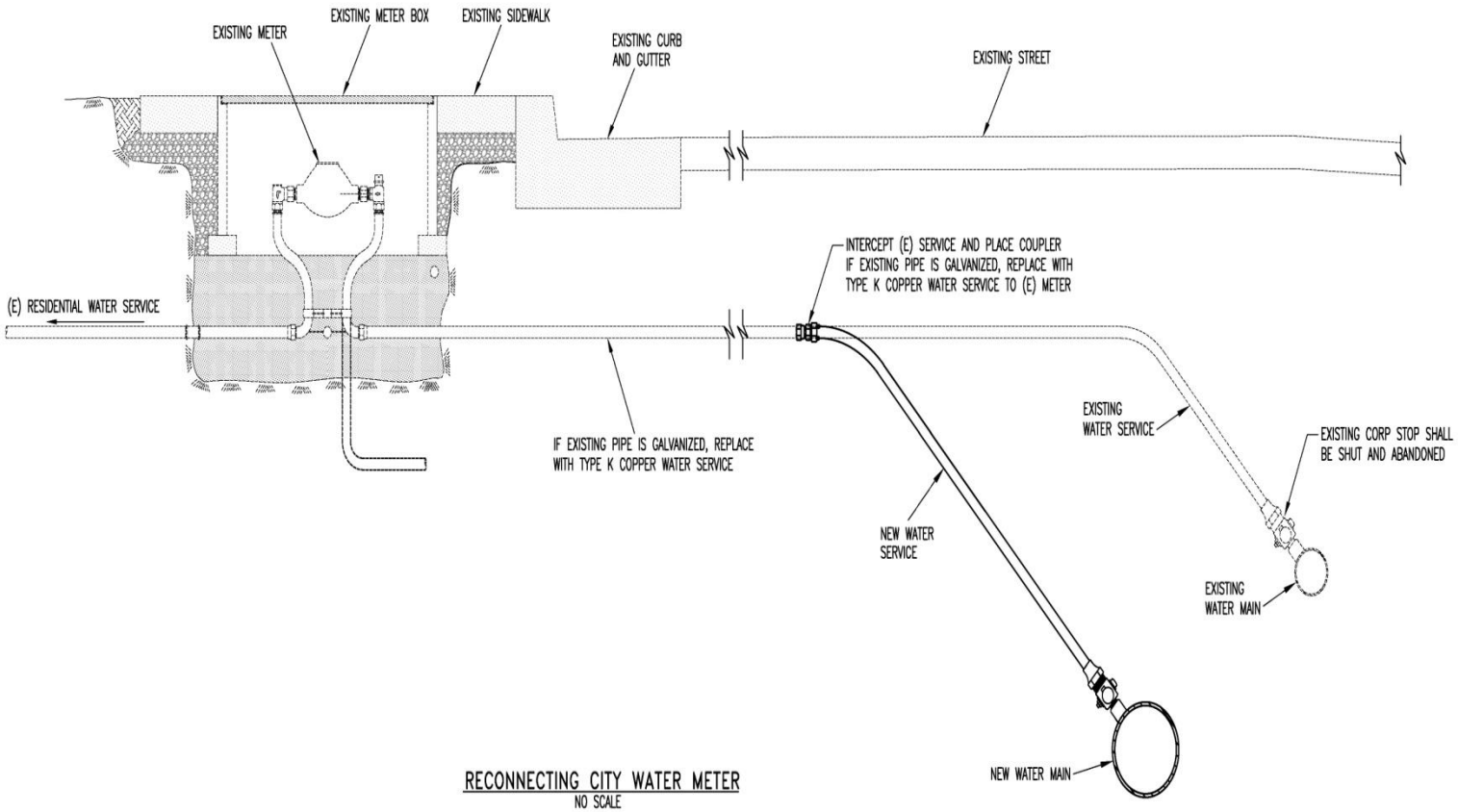

RECONNECTING CITY WATER METER
NO SCALE

APPENDIX B

Notification Letters

Constructing Sewer Main [Distribute 2 working days prior to beginning work]

(CONTRACTOR LETTER HEAD)

Dear Resident,

The City of Sacramento, Department of Utilities, awarded a construction contract to (Contractor) to replace the combined sewer pipeline and water pipeline add location here.

During the course of construction, a portion of the alley will be closed to through traffic. In addition, if your garage, driveway, or parking area is accessed from the alley, access may be temporarily restricted during the brief period that construction takes place in front of your driveway. At the end of each work day, the entire alley will be re-opened. Our work hours are typically between 7 AM to 6 PM. In an effort to minimize driveway access delays, you may consider moving your vehicle before 7:00 a.m. when the construction crews begin work.

General public and construction crew safety is of primary concern to us and we encourage you to observe the construction signs. We realize this construction project may be a temporary inconvenience and we will strive to minimize the impacts to the residents.

If you have any questions or problems, please contact any one of the project representatives listed below:

Contractor Superintendent: Name: Phone Number
City Inspector: Name: Phone Number
City Inspection Supervisor: Name: Phone Number
City Project Manager: Name: Phone Number

Pipeline work is scheduled to begin in your neighborhood on _____.

Once the pipelines are constructed, we will restore the affected portion of the alley surface. The anticipated project completion date is _____.

Thank you for your cooperation on this very important project.

Sincerely,
Contractor Representative

Transferring Water Services: [Distribute 24 hours prior to beginning work]

(CONTRACTOR LETTER HEAD)

Dear Resident,

The City of Sacramento, Department of Utilities, awarded a construction contract to (Contractor) to replace the water pipeline add location here.

In order to perform necessary repairs, your water service will be temporarily shut-off tomorrow for a short period of time not more than 4 hours, between the hours of 7:30 AM and 3:30 PM.

We may need access to your backyard to complete this work. Please provide access to your backyard and make arrangements for any pets that may be a problem. **If special arrangements are required, please contact (Contractor Superintendent) at (phone number) or a project representative listed below.** Once the service has been installed we will need to use your hose bib and garden hose to flush the line.

City Inspector: Name, Phone Number

City Project Manager: Name, Phone Number

Thank you for your cooperation on this very important project.

Sincerely,
Contractor Representative