Meeting Date: **2/25/2014**

Report Type: Consent

Report ID: 2014-00143

City of SACRAMENTO **10**

City Council Report
915 I Street, 1st Floor
www.CityofSacramento.org

Title: Well Rehabilitation Project Change Order No. 2 (Two-Thirds Vote Required)

Location: Districts 1, 2 and 3

Recommendation: Pass a Resolution 1) suspending competitive bidding, in the best interests of the City, for the emergency restoration to active service of nine existing groundwater wells, by adding this work to the City's Well Rehabilitation project contract with J.R. Sharp Construction, Inc.; 2) waiving the 10-day posting requirement for agreements greater than $1,000,000; 3) authorizing Change Order No. 2 to City Contract No. 2013-0420 with J.R. Sharp Construction, Inc., to perform this work and specified security upgrades for a cost of $1,157,775, bringing the contract's not-to-exceed amount to $1,609,342; 4) authorizing a transfer of $300,000 from the Fluoride Equipment Rehabilitation Program; and 5) increasing the City Manager's change order authority to $100,000 for the remainder of the contract.

Contact: Bill Busath, Engineering & Water Resources Manager, (916) 808-1434; Dan Sherry, (916) 808-1419, Department of Utilities

Presenter: None

Department: Department Of Utilities
Division: Cip Engineering
Dept ID: 14001321
Attachments:
1-Description/Analysis
2-Background
3-Location Map
4-Resolution
5-Exhibit A (Change Order)

City Attorney Review

Approved as to Form
Joe Robinson
2/19/2014 5:07:12 PM

Approvals/Acknowledgements

Department Director or Designee: Dave Brent - 2/18/2014 1:48:21 PM

James Sanchez, City Attorney Shirley Concolino, City Clerk Russell Fehr, City Treasurer
John F. Shirey, City Manager

Back to Report Table of Contents

Description/Analysis

Issue Detail: Phase 1 of the City's Well Rehabilitation program, funded by the 2013 Water Revenue Bond sale, is rehabilitating four existing groundwater wells. This project was competitively bid, and the City Council awarded the Phase 1 construction contract to the low bidder, J.R. Sharp Construction, on April 18th, 2013. Since the initiation of the original project, security standards have been updated to protect groundwater well sites from vandalism and theft. City staff is recommending that City Council approve Change Order No. 2, to authorize additional work for J.R. Sharp Construction to bring these four City groundwater well sites up to the new security standards.

In addition, as the City is nearing the completion of Phase 1 work, Northern and Central California is facing a drought of historic proportions, with reduced river flows potentially affecting the City's available water supply from both the Sacramento and American Rivers. The City has nine existing permitted potable groundwater wells that are out of active service, but could be restored to service with service restoration work and testing.

In order to activate these wells as soon as possible, and before water demands peak this summer, City staff is recommending that the City Council suspend competitive bidding, and authorize J.R. Sharp Construction to restore these nine wells to service on an emergency basis, as part of Change Order No. 2. J.R. Sharp Construction is most familiar with this type of work and is available to start immediately. To expedite this work, staff also is requesting (1) that the City Council waive the 10-day posting requirement in the Council Rules for agreements greater than $1,000,000, and (2) that the City Manager's change order authority for the remainder of this contract be increased.

Policy Considerations:

Suspension of Competitive Bidding:

The City Charter and City Code Section 3.60.170(D) authorize the City Council to suspend competitive bidding when it determines, on a 2/3 vote, that it is in the City's best interests to do so. It is in the best interests of the City to suspend competitive bidding for the work necessary to put nine existing wells back into service because this work is needed to restore, as soon as possible, permitted groundwater capacity that can be used to augment surface water diversion capacity that may be affected by the drought, in order to maintain the City's ability to continue providing essential water service to City residents and businesses. Adding this work on an emergency basis to the City's existing contract with J.R. Sharp Construction, Inc. will allow this work to be performed as quickly as possible and prior to increased summer water supply demands.

Increase of Change Order Authority:

City Code Section 3.60.240 allows the City Council, by Resolution, to modify the monetary limits on the City Manager's authority to approve change orders, where the City Council finds that the circumstances are such that a variance is appropriate. The City Manager's current cumulative change order authority for this contract is 10% of the original contract amount, or $25,300. If Change Order No. 2 is approved, the contract

not-to-exceed amount will be $1,609,342.40. To provide greater flexibility to approve on an expedited basis changes necessary to complete the well restoration work, if any, this report recommends also increasing the City Manager's cumulative change order authority to $100,000 for the remainder of this contract.

Economic Impacts: This new infrastructure is expected to create 8.57 total jobs (5.44 direct jobs and 3.13 jobs through indirect and induced actives) and create $1,130,592.76 in total economic output ($724,739.36 of direct output and another $405,853.40 of output through indirect and induced activities).

The indicated economic impacts are estimates calculated using a calculation tool developed by the Center for Strategic Economic Research (CSER). CSER utilized the IMPLAN input-output model (2009 coefficients) to quantify the economic impacts of a hypothetical $1 million of spending in various construction categories within the City of Sacramento in an average one-year period. Actual impacts could differ significantly from the estimates and neither the City of Sacramento nor CSER shall be held responsible for consequences resulting from such differences.

Environmental Considerations: The additional security upgrades are exempt from environmental review under the California Environmental Quality Act (CEQA), because it can be seen with certainty that performance of this work will not have a significant effect on the environment (CEQA Guidelines Section 15061(b) (3)).

Returning the nine existing wells to service is exempt from environmental review under the California Environmental Quality Act (CEQA), under Sections 15301 and 15302 of the CEQA Guidelines. Section 15301 applies to the repair, maintenance, permitting, or minor alteration of existing facilities, including public utility facilities, involving negligible or no expansion of use. Section 15302 applies to the replacement or reconstruction of existing facilities, including utility facilities, where the new or reconstructed facility will be located on the same site and will have substantially the same purpose and capacity as the facility being replaced or reconstructed. These exemptions do not apply if there are significant cumulative impacts, or where there is a reasonable possibility that there will be significant environmental effects due to unusual circumstances (CEQA Guidelines Section 15300.2(b) and (c)).

These nine existing wells were taken out of service for two reasons: Four of the wells were taken out of service due to mechanical issues requiring repair, and five of the wells are on emergency stand-by status due to the need for upgrades to comply with current regulatory requirements for active service. Returning the nine existing wells to active service will not increase the capacity of these wells, and the wells will be used for the same purpose as before they were taken out of active service.

With regard to cumulative effects, the use of these nine existing wells was included in the City's existing groundwater capacity and usage analyzed in the Master Environmental Impact Report (MEIR) for the 2030 General Plan, certified by the City Council on March 3, 2009. The MEIR considered the City's deliveries of groundwater pumped from 33 existing permitted municipal groundwater supply wells that supplied the City with average groundwater deliveries from 1998 to 2006 of about 22,500 acre

feet annually (AFA), or 20 million gallons per day (annual groundwater pumping during this time period ranged from 17,924 AFA to 25,607 AFA). See MEIR, pp. 6.11-9, and Tables 6.11-1, 6.11-4, and 6.11-5. These 33 permitted wells included the nine existing wells proposed for restoration to active service, and it is anticipated that returning the nine wells to active service will not cause the City's average annual groundwater pumping volume and rate to exceed the average volume and rate analyzed in the MEIR. Department of Utilities staff also have reviewed the nine well locations and determined that none of these locations present unusual circumstances that will lead to significant environmental effects, and that resuming groundwater pumping will not result in any new project-specific effects that were not present during the previous well operations. City staff will file a Notice of Exemption if the proposed change order is approved.

Sustainability: This report's recommendation is consistent with the City's Strategic Plan Goals of achieving sustainability and livability, and promotes General Plan Policy U 2.1.7 (Water Supply During Emergencies) by taking emergency action necessary to maintain the City's ability to provide essential water service.

Commission/Committee Action: None.

Rationale for Recommendation: Maintaining a water supply that meets essential public health, safety, and welfare needs for the City and its residents and businesses is of critical importance. The proposed change order compensates the Contractor for performing additional work requested by the City.

Financial Considerations: The original contract amount for the Well Rehabilitation Project was $253,000, and the City Council approved Change Order No. 1 on October 8, 2013, for $198,567.40. The cost for the additional security work requested by City is $100,000, and the cost for the emergency restoration of nine wells is $1,057,775 for a total Change Order No. 2 amount of $1,157,775, bringing the total contract not-to-exceed amount to $1,609,342.40. There is insufficient funding in the Well Rehabilitation Project (Z14110100, fund 6310) for this additional amount. Staff requests a transfer of $300,000 from the Fluoride Equipment Rehabilitation Program CIP Z14130600, fund 6310, to Z14110100, to fund the portion of this cost attributable to the installation of fluoride equipment at the wells being returned to service.

Local Business Enterprise (LBE): The City's LBE program was not applicable when this contract was awarded to the contractor.

Back to Report Table of Contents

Background

As part of the 2013 Water Bond sales, a number of the City's active groundwater wells have been scheduled for rehabilitation to restore flow capacities, replace aged equipment, and improve security at the sites.

Four wells are presently being rehabilitated under a contract with J. R. Sharp Construction Inc. and the work is nearing completion. However, over the past year, security requirements around well sites have been modified which was not included within the original contract. To ensure all wells are brought to current standards, a change order for an additional $100,000 is needed to complete the security improvements.

In addition to the groundwater rehabilitation efforts for these active well sites, there are an additional nine permitted wells that have been taken out of active service, but could be placed back into service with restoration work and testing. Five of these wells are currently in standby status, set to activate only under emergency conditions. Although these wells are available for use, they may not be restored to active status without being tested and brought up to current regulatory standards. The other four wells are out of service due to mechanical defects that require repair.

City staff is requesting that the City Council authorize the immediate performance of the work necessary to put these wells back into service as soon as possible. This action will restore approximately 7 million gallons per day of permitted groundwater capacity that can be used to augment surface water diversion capacity that may be affected by the ongoing drought and low river flows resulting from the drought.

To expedite this work, the Utilities Department recommends adding these nine wells to the existing Well Rehabilitation project with J. R. Sharp Construction Inc., for a not-to-exceed amount of $$1,057,775. This additional cost, plus the $100,000 for additional security measures, will increase the total contract not-to-exceed amount to $1,609,342.40. Approval of the proposed change order would allow the work to start immediately.

The wells that are slated to be put back into production are wells 91, 92, 93, 112, 114, 123, 127, 139, and 158. A location map is provided in this Council report.

Back to Report Table of Contents

LOCATION MAP

Well Rehab 2B

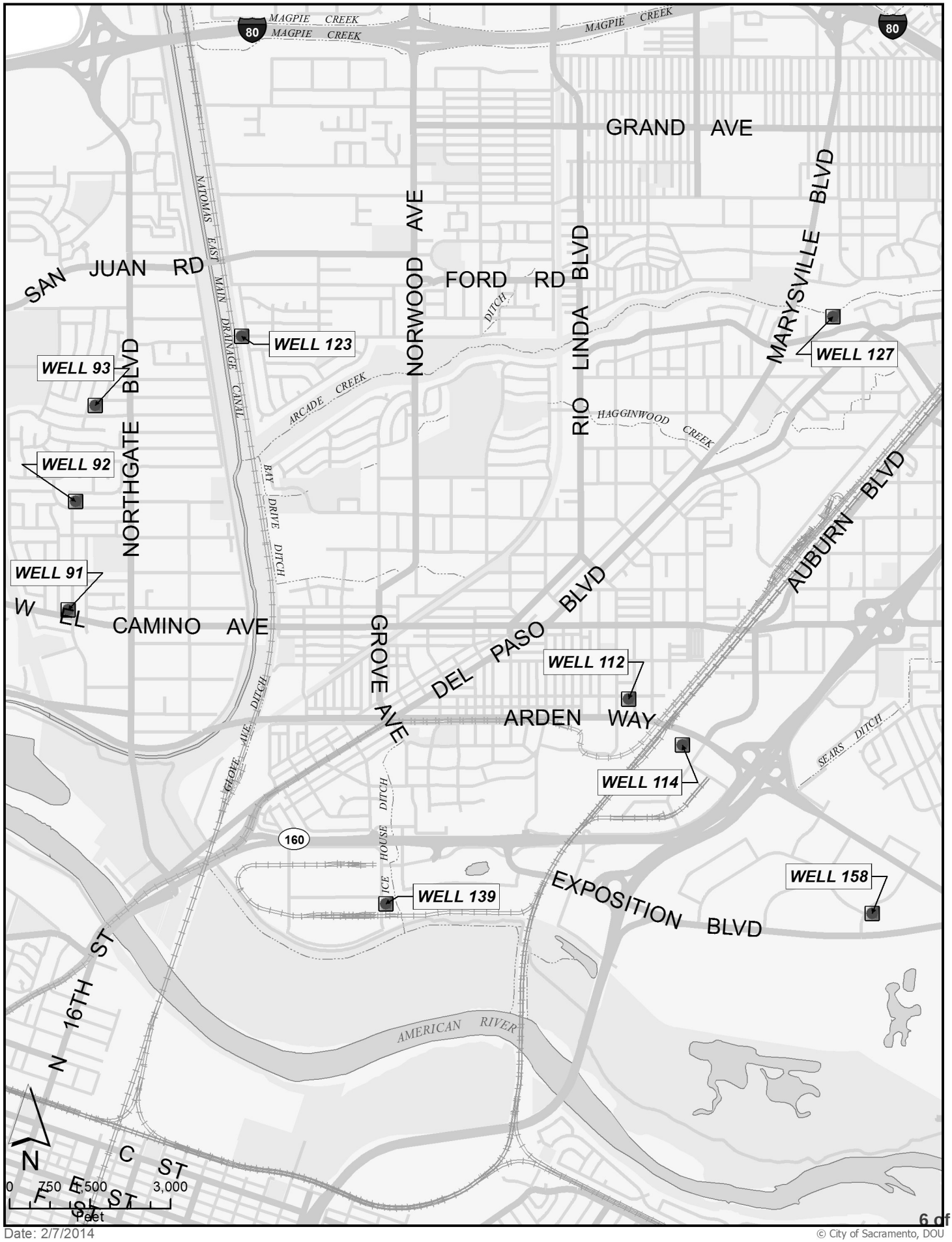

Date: 2/7/2014

© City of Sacramento, DOU

Back to Report Table of Contents

RESOLUTION NO. 2014-

Adopted by the Sacramento City Council

SUSPENDING COMPETITIVE BIDDING FOR THE EMERGENCY RESTORATION OF NINE EXISTING WELLS, WAIVING 10 DAY POSTING REQUIREMENT, AUTHORIZING CHANGE ORDER NO. 2 FOR THE WELL REHABILITATION PROJECT (Z14110100), APPROVING BUDGET TRANSFER, AND INCREASING CITY MANAGER CHANGE ORDER AUTHORITY

BACKGROUND

A. The City of Sacramento has three water supply sources: American River water, Sacramento River water, and groundwater. The City diverts surface water for approximately 85% of the City's water supply from the two rivers under its Sacramento and American River water rights, with the remaining 15% provided by groundwater wells. Normally, the City's water supplies are adequate to meet the City's water supply demands. However, California is now experiencing the driest year on record, snow pack in California's mountains and reservoir water storage levels in Northern and Central California are at alarmingly low levels, river flow levels upstream of the City's surface water intakes are significantly reduced and current forecasts call for continued drought.

B. On January 14, 2014, the Sacramento City Council declared a water shortage and imposed heightened water conservation requirements. On January 17, 2014, Governor Jerry Brown signed a proclamation declaring a drought State of Emergency in California. That same day, the State Water Resources Control Board (State Board) issued a Notice of Surface Water Shortage and Potential for Curtailment of Water Right Diversions, notifying water right holders that water right holders in critically dry watersheds may be required to limit or stop diversions of water under their water right, based on their priority. On January 31, 2014, the State Board approved a Temporary Urgency Change Petition filed by the California Department of Water Resources (DWR) and U.S. Bureau of Reclamation (USBR), lowering Bay-Delta flow requirements to allow the DWR and USBR to reduce releases and maintain more water in State Water Project and Central Valley Project reservoirs,

resulting in further reductions to river flow levels upstream of the City's surface water intakes.

C. Reduced river flows can negatively impact surface water diversions that constitute the main source of water supply for the City. Maintaining a water supply that meets essential public health, safety, and welfare needs for the City and its residents and businesses is of critical importance.

D. The City has nine existing permitted groundwater wells that have been taken out of active service but can be placed back into active service with the performance of service restoration work and testing – wells 91, 92, 93, 112, 114, 123, 127, 139, and 158. Four of the wells were taken out of service due to mechanical issues requiring repair, and five of the wells are on emergency stand-by status due to the need for upgrades to comply with current regulatory requirements for active service. Returning the nine existing wells to active service will not increase the capacity of these wells, and the wells will be used for the same purpose as before they were taken out of active service.

E. To expedite the performance of this work, staff recommends that the City Council suspend competitive bidding, and authorize a change order adding this work to the Well Rehabilitation project currently being performed by J.R. Sharp Construction, Inc., under City Contract No. 2013-0420. Authorizing the performance on an emergency basis of the work necessary to put these wells back into service will restore permitted groundwater capacity that can be used to augment surface water diversion capacity that may be affected by the drought. In addition, it is critical to complete this work as soon as possible, since the demands for essential water service will increase as winter ends and warmer weather begins. J.R. Sharp Construction is most familiar with this type of work and is available to start immediately.

F. Under the City Charter and City Code Section 3.60.170(D), the City Council can suspend competitive bidding when it determines, on a 2/3 vote, that it is in the City's best interests to do so.

G. It is in the best interests of the City to suspend competitive bidding for the work necessary to put nine existing wells back into service, because this work is needed to restore, as soon as possible, permitted groundwater capacity that can be used to augment surface water diversion capacity that may be affected by the drought, in order to maintain the City's ability to continue providing essential water service to City residents and businesses. Adding this work on an emergency basis to the City's existing contract with J.R. Sharp Construction, Inc.,

will allow this work to be performed as quickly as possible and prior to increased summer water supply demands.

H. Returning the nine existing wells to active service is exempt from environmental review under the California Environmental Quality Act (CEQA), under Sections 15301 (Existing Facilities) and 15302 (Replacement or Reconstruction) of the CEQA Guidelines. These exemptions do not apply if there are significant cumulative impacts, or where there is a reasonable possibility that there will be significant environmental effects due to unusual circumstances (CEQA Guidelines Section 15300.2(b) and (c)). Neither of these limitations apply here.

I. With regard to cumulative effects, the use of these nine existing wells was included in the City's existing groundwater capacity and usage analyzed in the Master Environmental Impact Report (MEIR) for the 2030 General Plan, certified by the City Council on March 3, 2009. The MEIR considered the City's deliveries of groundwater pumped from 33 existing permitted municipal groundwater supply wells, that supplied the City with average groundwater deliveries from 1998 to 2006 of about 22,500 acre feet annually (AFA), or 20 million gallons per day (annual groundwater pumping during this time period ranged from 17,924 AFA to 25,607 AFA). See MEIR, pp. 6.11-9, and Tables 6.11-1, 6.11-4, and 6.11-5. These 33 permitted wells included the nine existing wells proposed for restoration to active service, and it is anticipated that returning the nine wells to active service will not cause the City's average annual groundwater pumping volume and rate to exceed the average volume and rate analyzed in the MEIR. City staff also have reviewed the nine well locations and determined that none of these locations present unusual circumstances that will lead to significant environmental effects, and that resuming groundwater pumping will not result in any new project-specific effects that were not present during the previous well operations.

J. In addition to returning the nine existing wells to active service, staff recommends the approval of additional work for the Well Rehabilitation project to bring the four well sites included in the project up to new security standards. The estimated total cost for both of these additional work items is $1,157,775. To fund the portion of this cost attributable to the installation of fluoride equipment at the wells being returned to service, staff requests a transfer of $300,000 from the Fluoride Equipment Rehabilitation Program CIP into the Well Rehabilitation Project.

K. Section 3.60.210 of the City Code limits the City Manager's authority to issue change orders to a specified percentage of the original

contract amount, but, under City Code Section 3.60.240, the City Council may increase this limitation if the City Council finds that the circumstances are such that a variance is appropriate.

L. Section E(2)(d) of Chapter 7 of the Council Rules of Procedure specifies a 10 day posting requirement for agreements greater than $1,000,000, unless this requirement is waived by a 2/3 vote of the City Council.

BASED ON THE FACTS SET FORTH IN THE BACKGROUND, THE CITY COUNCIL RESOLVES AS FOLLOWS:

Section 1. Competitive bidding is suspended, in the best interests of the City, for the work necessary to put nine existing wells back into service as soon as possible, by adding this work to the City's Well Rehabilitation project contract with J.R. Sharp Construction, Inc..

Section 2. The 10 day posting requirement for agreements greater than $1,000,000, specified in Section E(2)(d) of Chapter 7 of the Council Rules of Procedure, is waived.

Section 3. The City Manager or the City Manager's designee is authorized to sign Change Order No. 2 to City Contract No. 2013-0420 with J.R. Sharp Construction, Inc., to perform this additional work and specified security upgrades, for a cost of $1,157,775, bringing the contract's not-to-exceed amount to $1,609,342.40.

Section 4. The City Manager or the City Manager's designee is authorized to transfer $300,000 from the Fluoride Equipment Rehabilitation Program CIP Z14130600, fund 6310, into the Well Rehabilitation Project (Z14110100).

Section 5. Pursuant to City Code Section 3.60.240, the limitation on the City Manager's authority to issue change orders specified in City Code Section 3.60.210 is increased to $100,000 for the remainder of the Groundwater Well Electrical Rehabilitation contract. This is appropriate to provide greater flexibility to approve on an expedited basis changes necessary to complete the well restoration work.

Back to Report Table of Contents

CITY OF SACRAMENTO

CHANGE ORDER

Contract # & Date: 2013-0420 04/18/2013 **Budget #:** 6005-50000-51000000-Z14110101

Purchase Order #: 0000020431 **Change Order No:** 2

Sacramento, California Feb 14, 2014

TO: J. R. Sharp Construction, Inc. , Contractor

CONTRACT FOR: WELL ELECTRICAL REHABILITATION PROJECT (B13141321014)

Upon mutual acceptance of this document by the City of Sacramento, hereinafter referred to as "CITY", and your firm, hereinafter referred to as "CONTRACTOR", in accordance with the terms and conditions of the original contract documents, you are hereby directed to make the following change or changes for the consideration set forth below:

Description: SEE EXHIBIT A

The original contract sum was:	$ 253,000.00
Net change by previous change orders:	$ 198,567.40
The contract sum prior to this change order was:	$ 451,567.40
The contract sum will be ***increased*** by this C.O.:	$ 1,157,775.00
New contract sum including all Change Orders:	$ 1,609,342.40

CONTRACTOR agrees that the amount of increase or decrease in the contract sum specified in this change order shall constitute full compensation for the work required by this change order, including but not limited to all compensation for the additional and/or revised work specified herein, and shall fully compensate CONTRACTOR for any and all direct and indirect costs that may be incurred by CONTRACTOR in connection with such additional and/or revised work, including any changes, disruptions or delays in work schedules or in the performance or other work by CONTRACTOR. The time for performance of the Contract will be **increased by 80 working days** by reason of the performance of the work required by this Change Order. Except as herein above expressly provided, CONTRACTOR further agrees that the performance of the work specified in this Change Order or the rescheduling of other project work made necessary by this Change Order, shall not constitute a delay which will extend the time limit for completion of the work as said term is used in the Contract between CITY and CONTRACTOR for the project.

Approval Recommended By:

Project Manager – Paul Barnes

Approved By:

Contractor – J R Sharp Construction, Inc.

Approved as to Form by:

Joe Robinson, Deputy City Attorney

Approved By:

Dave Brent, Director, Department of Utilities

Approved By:

Shirley Concolino – City Clerk Date

CITY OF SACRAMENTO
CHANGE ORDER
EXHIBIT A

Contract # & Date: 2013-0420 04/18/2013 **Budget #:** 6005-50000-51000000-Z14110101

Purchase Order #: 0000020431 **Change Order No:** 2

1) **For Wells 134, 154, 156, and 159:** The contractor shall install a magnetic door switch on the motor junction box and run two number 14 conductors back to the PLC. The magnetic door switch shall be Sentrol model number 1044TW.

(Database Code: Customer Request) Total This Item: $1,272.00

2) **For Wells 134, 154, 156, and 159:** The contractor shall install a City supplied motion detector. Contractor shall install two number 12 conductors for 120 VAC power and two number 14 conductors for the relay contact. Contractor shall connect the motion detector to the 120 power supply inside the PLC cabinet and land the conductors for the relay contact to the PLC digital input card.

(Database Code: Customer Request) Total This Item: $0

3) **For Wells 134, 154, 156, and 159:** The contractor shall install a new ATI two module enclosure with a ATI power supply. Contractor shall mount the enclosure to the switchgear cover. Contractor shall mount the ATI display module inside the two module enclosure. Contractor shall power the power supply from the PLC cabinet. Contractor shall install conductors from the display module back to the PLC. Contractor shall connect the display module to the chlorine detector per the plans. Enclosure shall be ATI model number 80-0006. Power supply shall be ATI model number 00-0055. Contractor shall connect the chlorine detection system by ATI per the revised plans that will be given to the contractor.

(Database Code: Customer Request) Total This Item: $ 3,169.00

4) **For Wells 134, 154, 156, and 159:** The contractor shall remove and salvage the existing hydro pneumatic junction box. Contractor shall install new hydro pneumatic junction with the parts as shown in attachment 1. The contractor shall reuse the existing pressure transducer. For well 156 the contractor shall mount the new hydro pneumatic junction box to the hydro pneumatic tank using angle iron brackets and galvanized hardware and install new conduits from existing hydro pneumatic junction box to the new hydro pneumatic junction box.

(Database Code: Customer Request) Total This Item: $13,712.00

5) **For Well 134:** The contractor shall modify the hydro pneumatic tank by installing a site gauge with fittings and install a new well probe per attachment 2.

(Database Code: Design Change) Total This Item: $1,571.00

6) **For Well 159:** The contractor shall modify the lighting fixture brackets to mount the light fixtures higher. This will help to keep the new light fixtures from being vandalized.

(Database Code: Unforeseen Conditions) Total This Item: $467.00

7) **For Wells 154, 156, and 159:** The contractor shall remove and salvage the existing air compressor. Contractor shall install a new Air Charge 2000 Air compressor with probe and connect to the lighting panel. Contractor shall install a new well probe per attachment 2.

(Database Code: Customer Request) Total This Item: $9,525.00

8) **For Wells 134, 154, 156, and 159:** The contractor shall install modify the existing fence by extending the fence to 8 feet in height. Contractor shall reuse the existing fencing hardware and barbed wire. Contractor shall install new fence sleeves over the existing fence posts. Contractor shall reinstall the existing fence extensions with the existing barbed wire. Contractor shall install new fence fabric. Contractor shall rebuild each gate at 8' feet tall.

(Database Code: Customer Request) Total This Item: $49,254.00

9) **For Well 134:** The contractor shall remove the salvage the existing PLC enclosure within the chemical building. Contractor shall install a new 12"x12"x6" NEMA 1 junction box in same location as PLC enclosure. Contractor shall extend existing conduits into new junction box.

(Database Code: Customer Request) Total This Item: $653.00

10) **For Well 91:** The contractor shall perform all work specified by the City to activate this well with the proper chemical treatments which includes the following: conduits, conductors, building foundation per attachment 3, portable heater, flow meter, antenna pole, antenna, antenna pole foundation, modification of the existing fence, motion detector, security LED lighting, chlorine detector and power supply, back flow preventer, digital power meter, magnetic switch for jct box, chlorine booster pump with pressure gauge and isolation valves, make all connections to activate the chemical treatment of the water, ½" O.D. x 3/8" I.D. telfon PFA tubing & ¾" rubber hose for fluoride feed line encased inside a 2" schedule 40 PVC conduit with isolation valve, ¾" 200 psi horizon rubber hose for chlorine feed line encased inside a 2" schedule 40 PVC conduit with isolation valve, 1" schedule 80 PVC feed water line to chemical building with isolation valve, , ¾" water meter, 1" schedule 80 PVC feed water line to chemical building with isolation valve, air compressor, probe well, sight glass, eye wash station, and fence slats. The City will supply the following items to be installed by the contractor: chlorine scale, chlorine actuator, fiber glass building, water softener and stand, gas chlorinator and injector. Parts supplied by the contractor for this work shall conform to attachment 4.

(Database Code: Unforeseen Conditions) Total This Item: $72,931.00

11) **For Well 92:** The contractor shall perform all work specified by the City to activate this well with the proper chemical treatments which includes the following: conduits, conductors, flow meter, modification of the existing fence, motion detector, security LED lighting, chlorine detector and power supply, digital power meter, magnetic switch for jct box, chlorine booster pump with pressure gauge and isolation valves, make all connections to activate the chemical treatment of the water, and fence slats. The City will supply the following items to be installed by the contractor: chlorine scale, chlorine actuator, water softener and stand, gas chlorinator and injector. Parts supplied by the contractor for this work shall conform to attachment 4.

(Database Code: Unforeseen Conditions) Total This Item: $34,278.00

12) **For Well 93:** The contractor shall perform all work specified by the City to activate this well with the proper chemical treatments which includes the following: conduits, conductors, flow meter, motion detector, security LED lighting, chlorine detector and power supply, digital power meter, magnetic switch for jct box, chlorine booster pump with pressure gauge and isolation valves, make all connections to activate the chemical treatment of the water, and fence slats. The City will supply the following items to be installed by the contractor: chlorine scale, chlorine actuator, water softener and stand, gas chlorinator and injector. Parts supplied by the contractor for this work shall conform to attachment 4.

(Database Code: Unforeseen Conditions) Total This Item: $37,943.00

13) **For Well 112:** The contractor shall perform all work specified by the City to activate this well with the proper chemical treatments which includes the following: conduits, conductors, add window and exhaust fan to chemical building, portable heater, flow meter, 8 fence high fence with barbed wire, motion detector, security LED lighting, chlorine detector and power supply, back flow preventer, digital power meter, magnetic switch for jct

box, chlorine booster pump with pressure gauge and isolation valves, make all connections to activate the chemical treatment of the water, ¾" water meter, air compressor, probe well, sight glass, and eye wash station. The City will supply the following items to be installed by the contractor: chlorine scale, chlorine actuator, water softener and stand, gas chlorinator and injector. Parts supplied by the contractor for this work shall conform to attachment 4.

(Database Code: Unforeseen Conditions) Total This Item: $56,115.00

14) **For Well 114:** The contractor shall perform all work specified by the City to activate this well with the proper chemical treatments which includes the following: conduits, conductors, fiber glass building sized to fit within the existing facility, building foundation per attachment 3, portable heater, flow meter, antenna pole, antenna, antenna pole foundation, modification of the existing fence, motion detector, security LED lighting, chlorine detector and power supply, back flow preventer, digital power meter, magnetic switch for jct box, chlorine booster pump with pressure gauge and isolation valves, make all connections to activate the chemical treatment of the water, ½" O.D. x 3/8" I.D. telfon PFA tubing & ¾" rubber hose for fluoride feed line encased inside a 2" schedule 40 PVC conduit with isolation valve, ¾" 200 psi horizon rubber hose for chlorine feed line encased inside a 2" schedule 40 PVC conduit with isolation valve, ¾" water meter, 1" schedule 80 PVC feed water line to chemical building with isolation valve, air compressor, probe well, sight glass, and eye wash station.. The City will supply the following items to be installed by the contractor: chlorine scale, chlorine actuator, water softener and stand, gas chlorinator and injector. Parts supplied by the contractor for this work shall conform to attachment 4.

(Database Code: Unforeseen Conditions) Total This Item: $88,066.00

15) **For Well 123:** The contractor shall perform all work specified by the City to activate this well with the proper chemical treatments which includes the following: conduits, conductors, building foundation per attachment 3, portable heater, flow meter, antenna pole, antenna, antenna pole foundation, modification of the existing fence, motion detector, security LED lighting, chlorine detector and power supply, back flow preventer, digital power meter, magnetic switch for jct box, chlorine booster pump with pressure gauge and isolation valves, make all connections to activate the chemical treatment of the water, ½" O.D. x 3/8" I.D. telfon PFA tubing & ¾" rubber hose for fluoride feed line encased inside a 2" schedule 40 PVC conduit with isolation valve, ¾" 200 psi horizon rubber hose for chlorine feed line encased inside a 2" schedule 40 PVC conduit with isolation valve, ¾" water meter, 1" schedule 80 PVC feed water line to chemical building with isolation valve, air compressor, probe well, sight glass, eye wash station, and fence slats. The City will supply the following items to be installed by the contractor: chlorine scale, chlorine actuator, fiber glass building, water softener and stand, gas chlorinator and injector. Parts supplied by the contractor for this work shall conform to attachment 4.

(Database Code: Unforeseen Conditions) Total This Item: $74,348.00

16) **For Well 127:** The contractor shall perform all work specified by the City to activate this well with the proper chemical treatments which includes the following: conduits, conductors, flow meter, modification of the existing fence, motion detector, security LED lighting, chlorine detector and power supply, digital power meter, magnetic switch for jct box, chlorine booster pump with pressure gauge and isolation valves, and make all connections to activate the chemical treatment of the water. The City will supply the following items to be installed by the contractor: chlorine scale, chlorine actuator, water softener and stand, gas chlorinator and injector. Parts supplied by the contractor for this work shall conform to attachment 4.

(Database Code: Unforeseen Conditions) Total This Item: $39,165.00

17) **For Well 139:** The contractor shall perform all work specified by the City to activate this well with the proper chemical treatments which includes the following: conduits, conductors, add window to chemical building, portable heater, flow meter, modification of the existing fence, motion detector, security LED lighting, chlorine detector and power supply, back flow preventer, digital power meter, magnetic switch for jct box, chlorine booster pump with pressure gauge and isolation valves, make all connections to activate the chemical treatment of the water, ¾" water meter, air compressor, probe well, sight glass, and eye wash station. The City will supply the

following items to be installed by the contractor: chlorine scale, chlorine actuator, water softener and stand, gas chlorinator and injector. Parts supplied by the contractor for this work shall conform to attachment 4.

(Database Code: Unforeseen Conditions) Total This Item: $54,385.00

18) **For Well 158:** The contractor shall perform all work specified by the City to activate this well with the proper chemical treatments which includes the following: conduits, conductors, flow meter, modification of the existing fence, motion detector, security LED lighting, chlorine detector and power supply, digital power meter, magnetic switch for jct box, chlorine booster pump with pressure gauge and isolation valves, make all connections to activate the chemical treatment of the water, and fence slats. The City will supply the following items to be installed by the contractor: chlorine scale, chlorine actuator, water softener and stand, gas chlorinator and injector. Parts supplied by the contractor for this work shall conform to attachment 4.

(Database Code: Unforeseen Conditions) Total This Item: $41,623.00

19) **Fluoride System:** The contractor shall provide nine Integrity FFS-55-2-1P Sodium Fluoride Saturator Systems for each of the nine wells on the Well Rehab 2B project. This price shall also include shipment, installation, all water connections, all electrical connections, and all PLC connections. The fluoride system shall meet the requirements of the NFS/ANSI 61 standards. This price is per each. Parts for this work shall conform to attachment 4.

(Database Code: Unforeseen Conditions) Total This Item: $258,462.00

20) **Eye Wash Station:** The contractor shall provide five HAWS Model 8320 eye wash stations for the wells identified on the Well Rehab 2B project. This price shall also include shipment, installation, concrete foundation, and all water connections. This price is per each.
(Database Code: Unforeseen Conditions) Total This Item: $14,500.00

21) **PLC System:** The contractor shall provide three PLC systems for the wells identified on the Well Rehab 2B project. This price includes shipment, installation, NEMA 1 fiberglass enclosure 36"x36"x12", Modicon M340 PLC modules, HMI panel model number HMISTU855, microhard radio model number Nano Series IPn920T, terminal blocks, circuit breakers, fuses, DIN rail, Eaton UPS model 9130, power supply, relays, four cable fast quick connectors, and Ntron Ethernet switch model 7010TX. The PLC modules shall include the following: BMX P34 2020 CPU, BMX CPS 3020 Power Supply, BMX XBP 1200 12 Slot Rack, BMX DDI 1602 Digital Input Card, BMX DDO 1602 Digital Output Card, BMX AMI 0810 Analog Input Card, BMX AMO 0410 Analog Output Card, BMX NOE 0100 Ethernet Card, BMX NOC 0401 Ethernet Card, and BMX NOM 0200 Communications Card. This price is per each. Parts supplied by the contractor for this work shall conform to attachment 4.

(Database Code: Unforeseen Conditions) Total This Item: $108,726.00

22) **PLC System:** The contractor shall provide six PLC systems for the wells identified on the Well Rehab 2B project. This price includes shipment, installation, back pan to fit existing enclosures, Modicon M340 PLC modules, HMI panel model number HMISTU855, microhard radio model number Nano Series IPn920T, terminal blocks, circuit breakers, fuses, DIN rail, Eaton UPS model 9130, power supply, relays, four cable fast quick connectors, and Ntron Ethernet switch model 7010TX. The PLC modules shall include the following: BMX P34 2020 CPU, BMX CPS 3020 Power Supply, BMX XBP 1200 12 Slot Rack, BMX DDI 1602 Digital Input Card, BMX DDO 1602 Digital Output Card, BMX AMI 0810 Analog Input Card, BMX AMO 0410 Analog Output Card, BMX NOE 0100 Ethernet Card, BMX NOC 0401 Ethernet Card, and BMX NOM 0200 Communications Card. This price is per each. Parts supplied by the contractor for this work shall conform to attachment 4.

(Database Code: Unforeseen Conditions) Total This Item: $197,610.00

Total This Change Order: $1,157,775

NOTES:
1. PAINT ENCLOSURE TO MATCH EXISTING TANK
2. SST = STAINLESS STEEL

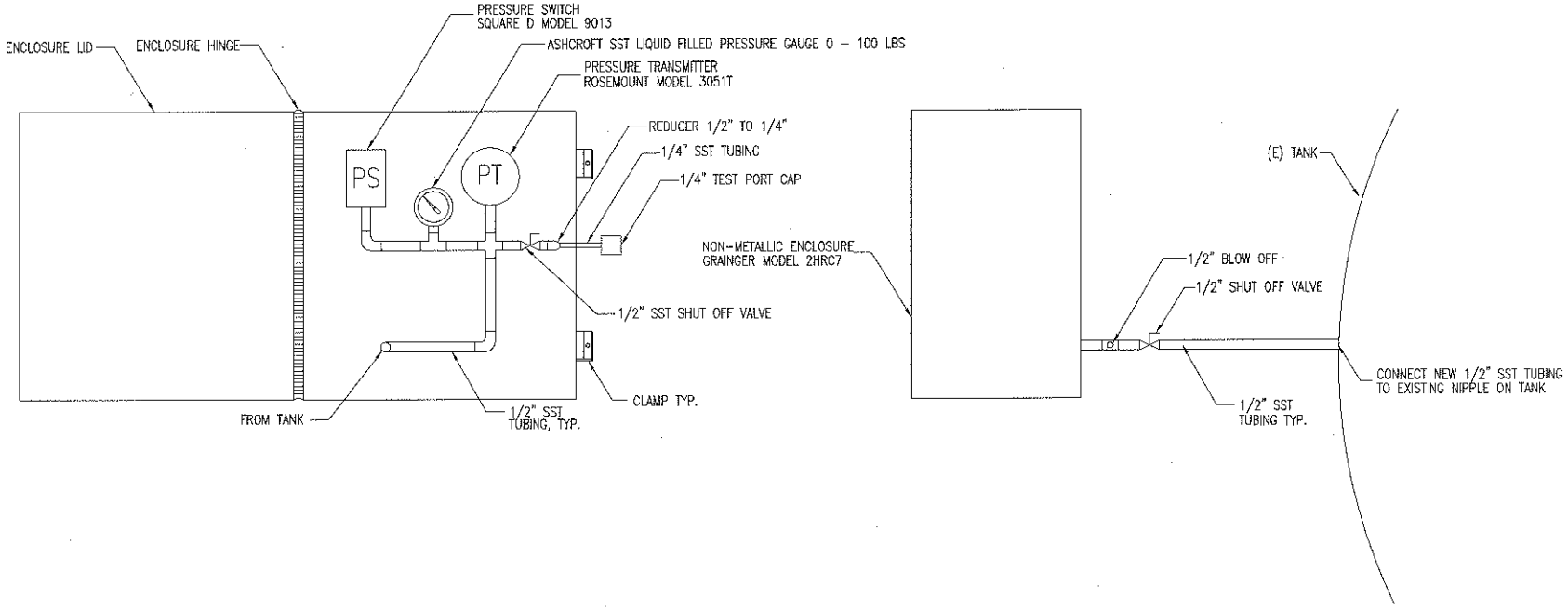

NEMA 4X NONMETALIC
ENCLOSURE DETAIL

REVISIONS				BENCH MARK	ELEV.	FIELD BOOK	1"	CITY OF SACRAMENTO	IMPROVEMENT PLANS FOR:	GIS GRID NO.	DWG. NO.
NO.	DESCRIPTION	DATE	BY	DESCRIPTION:		SCALE: H: N.A. V: N.A.	ON ORIGINAL SCALE DRAWING ADJUST SCALED DIMENSIONS IF THIS DOES NOT SCALE AT 1"	DEPARTMENT OF UTILITIES	WELL REHABILITATION PROJECT PHASE 2A	PN: Z14110104	E-26
								DRAWN BY: P. BARNES DATE: JAN 2014	DESIGNED BY: P. BARNES R.E.E. NO. 15329 DATE: JAN 2014	CHECKED BY: D. HANSEN R.E.E. NO. E12512 DATE: JAN 2014	SHEET 27 OF XX

REGISTERED PROFESSIONAL ENGINEER PAUL R. BARNES No. E15329 Exp. 6/30/15 ELECTRICAL STATE OF CALIFORNIA

ATTACHMENT 1

PN: Z14110104 WELL REHABILITATION PROJECT PHASE II S:\Electrical Drawings\Well Rehab Phase 2

PN: Z14110104 WELL REHABILITATION PROJECT PHASE I

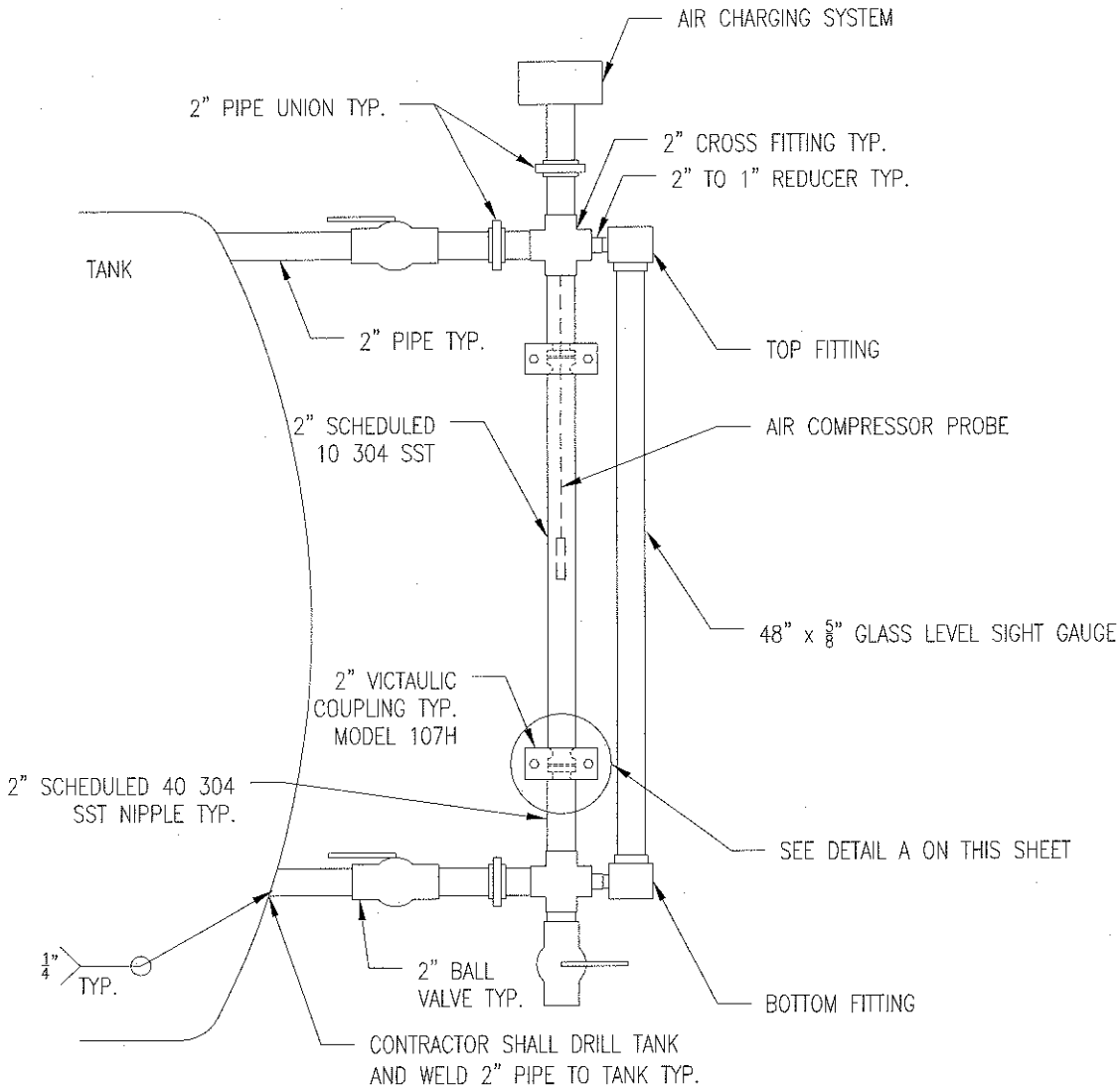

NOTES:

1. ALL PIPE SHALL BE GALVANIZED STEEL PIPE, UNLESS OTHERWISE NOTED.
2. SST = STAINLESS STEEL
3. CONTRACTOR SHALL MOUNT THE COMPRESSOR PROBE ABOVE THE TANK VENT.

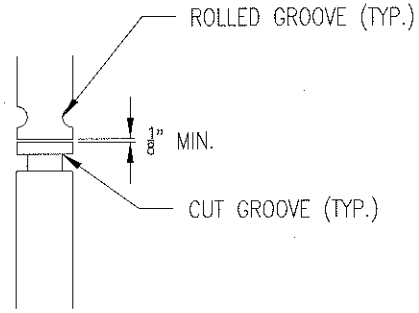

DETAIL A

HYDROPNEUMATIC TANK

DETAIL

REVISIONS			
NO.	DESCRIPTION	DATE	BY
1			
2			
3			
4			

BENCH MARK DESCRIPTION: ELEV.

FIELD BOOK

SCALE: H: N.A. V: N.A.

1" ON ORIGINAL SCALE DRAWING ADJUST SCALED DIMENSIONS IF THIS DOES NOT SCALE AT 1"

CITY OF SACRAMENTO
DEPARTMENT OF UTILITIES

DRAWN BY: P. BARNES DATE: JAN 2014
DESIGNED BY: P. BARNES R.E.E. NO. 15399 DATE: JAN 2014
CHECKED BY: D. HANSEN R.E.E. NO. E12512 DATE: JAN 2014

IMPROVEMENT PLANS FOR:
WELL REHABILITATION PROJECT PHASE 2A

ATTACHMENT 2

PGS CHKD NO. DWG CHKD

PN: Z14110104

DWG. NO. E-27
SHEET 28 OF XX

PN: Z14110104 WELL REHABILITATION PROJECT PHASE II S:\Electrical Drawings\Well Rehab Phase 2

PN: Z14110104 WELL REHABILITATION PROJECT PHASE II

ATTACHMENT 3

Chemical Shed:

- Slab –
  - **Materials**: 6-inch thick concrete slab with #4 rebar, 12-inches O.C. in a grid pattern installed level, with polyurethane caulking to form a seal between the shed and the concrete
  - **Base:** 6-inches of ¾" AB compacted to 95%
  - **Size Specifications:** Slab should extend 4-inches beyond the wall of the shed such that the bolts securing the shed are a minimum of 6-inches from the edge (a 6x8 shed would have a ~7x9 pad)
  - **Drainage Requirements:** Slab should extend 2-inches above grade (minimum), and higher as surrounding grades require, with a ramp at the shed entrance to allow for equipment to be rolled in (5% max. slope).

N.T.S.

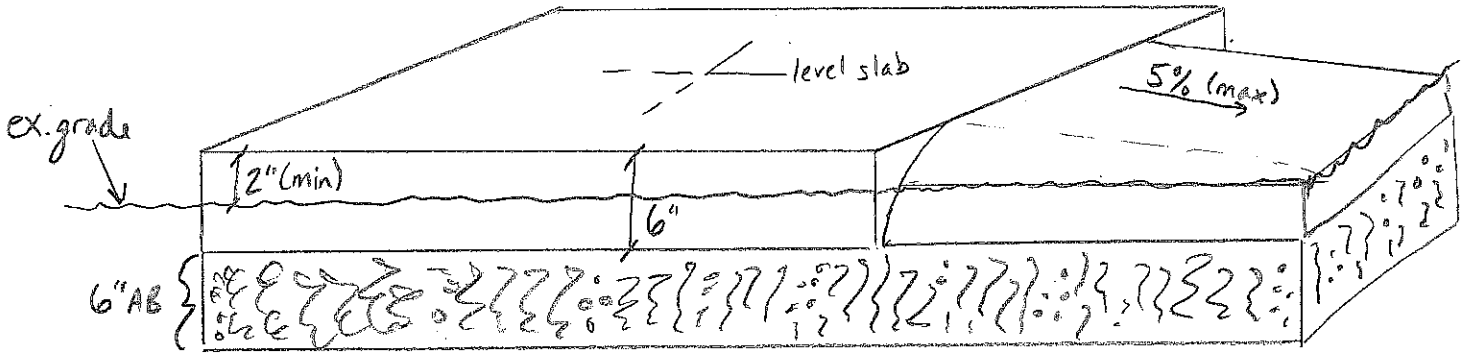

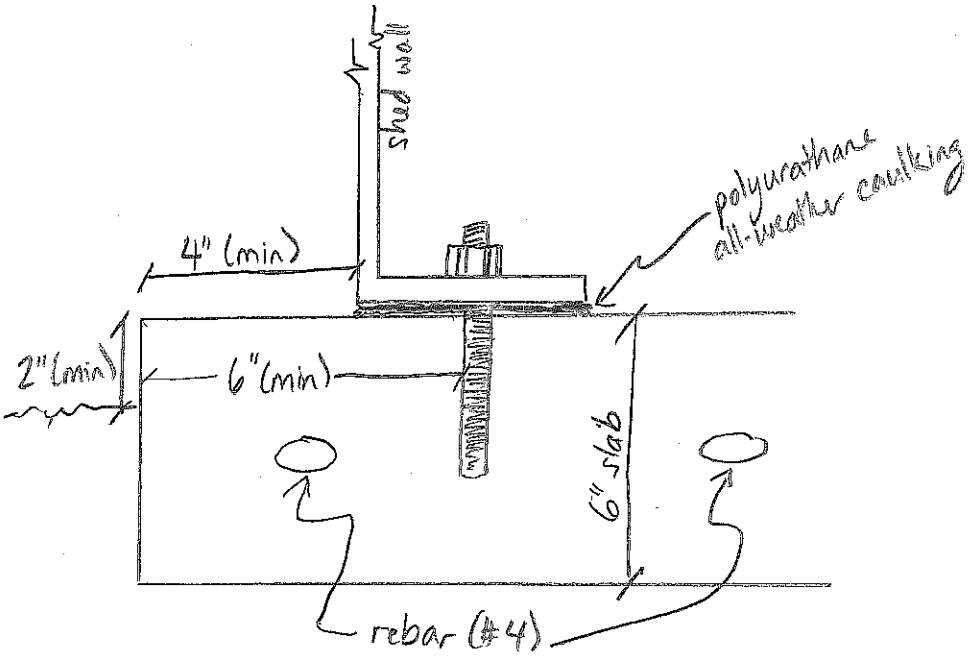

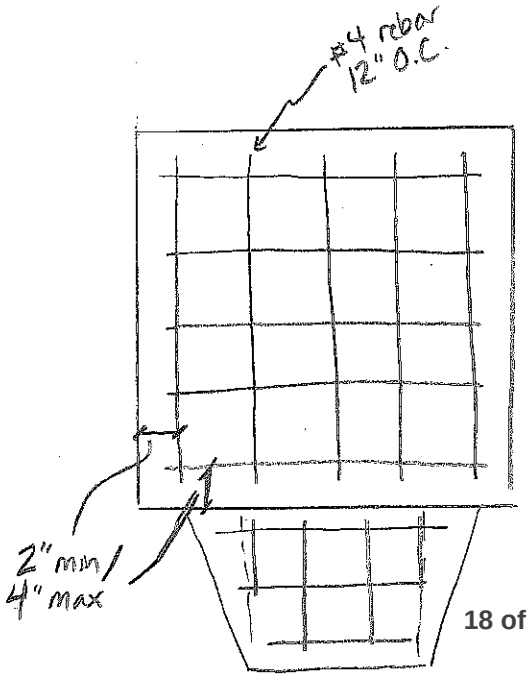

Attachment 4

Well Rehab 2B Parts List

PLC parts	BMX P34 2020 CPU BMX CPS 3020 Power Supply BMX XBP 1200 12 Slot Rack BMX DDI 1602 Digital Input Card BMX DDO 1602 Digital Output Card BMX AMI 0810 Analog Input Card BMX AMO 0410 Analog Output Card BMX NOE 0100 Ethernet Card BMX NOC 0401 Ethernet Card BMX NOM 0200 Comm Card Use Eaton Terminal blocks, fuses AC and DC, DIN rail, DIN circuit breakers, power supply, and relays similar to Well Rehab 1 Provide four cable fast quick connectors for each I/O PLC module
Microhard radio	Microhard Systems Nano Series IPn920T
Lightning Arrester	Lightning arrester model number Polyphaser Corp. IS-50NX-C2
Operator interface panel	Magelis Operator Interface panel model number HMISTU855
Antenna pole	Provide a 35 foot long, hot dipped galvanized steel antenna pole and other additional mounting hardware required for a complete installation. Antenna support members shall have sufficient strength to withstand local wind conditions of 80 MPH sustained. All the mounting hardware shall be hot dipped galvanized or stainless steel.
Antenna	SCALA RY-900B
Chlorine booster pump	Grundfos Model CR1-7 (3/4 hp 480v3p) 8 gpm @ 150'
480V Motor Starter	Eaton or equal rated NEMA 1.
3/4" Water meter	¾" badger water meter Model 35 with NPT pipe unions and rubber gaskets
Haws eye wash station	HAWS Model 8320
Chlorine detector	ATI A14/A11-11-0026-1-2 including the following parts: Two Module Enclosure: 80-0006 Power Supply Module: 00-0055
LED Security Lighting	Lithonia DSXF2 LED 4 40K with wall bracket

Flow Meter	E&H L400 with Ethernet communications
Fluoride System	Integrity FFS-55-2-1P Sodium Fluoride Saturator System
UPS	Eaton PW9130L1000T-XL
Ethernet Switch	Ntron model number 7010TX
Motion Detector	EW outdoor motion sensor model number EW-100-120
Digital Power Meter	Eaton PXM2260 PQ meter with Ethernet communications, include any PTs and CTs
Air Compress	ChargeAir 2000 manufactured by MAASS Midwest Inc. with probe
Back Flow Preventer	Zurn model number 975XL