08

City of SACRAMENTO

City Council Report
915 I Street, 1st Floor
www.CityofSacramento.org

Meeting Date: **4/1/2014**

Report Type: Consent

Report ID: 2014-00053

Title: Contract: Dogwood Park Development (L19185000)

Location: 3075 Macon Drive, District 1

Recommendation: Pass a Motion 1) approving the construction plans and specifications for Dogwood Park Development (L19185000) project; 2) awarding the contract to Abide Builders, Inc. for an amount not to exceed $836,360; and 3) authorizing the City Manager or City Manager's designee to execute the contract with Abide Builders, Inc., for an amount not to exceed $836,360.

Contact: C. Gary Hyden, Supervising Landscape Architect, (916) 808-1949, Department of Parks and Recreation

Presenter: None

Department: Parks & Recreation Department
Division: Park Development Services
Dept ID: 19001121
Attachments:
1-Description/Analysis
2-Background
3-Location Map
4-Master Plan
5-Contract

City Attorney Review

Approved as to Form
Sheryl Patterson
2/20/2014 10:11:14 AM

City Treasurer Review

Reviewed for Impact on Cash and Debt
Russell Fehr
1/29/2014 12:53:16 PM

Approvals/Acknowledgements

Department Director or Designee: Elizabeth R. Anderson - 2/14/2014 2:44:58 PM

Description/Analysis

Issue:
Dogwood Park is a 3.02 acre neighborhood park located at 3075 Macon Drive in North Natomas, Council District 1.

Staff is seeking approval to award a contract to Abide Builders, Inc. for an amount not to exceed $836,360. The improvements will consist of clearing and grubbing, grading and drainage, concrete walkways and curbs, native American themed children's playground with teepee playground equipment and tire swing, climbing boulders and logs, poured-in-place rubber surfacing with concrete canoe, coyote and river beaver on a log, Pony Express themed tike track, two half basketball courts, two horseshoe courts, open turf area, group picnic area, automatic irrigation system with central control, landscaping, boulders, electrical, park signage, park name sign, site furniture, metal shade shelter, and fabric shade canopy.

The formal bid process for this project has been completed and Abide Builders, Inc. has been selected as the lowest responsible and responsive bidder.

Based on the recommendations from the City's Departmental Water Conservation Task Force and direction from the City Manager, turf, tree, shrub, and ground cover planting for all City projects during the drought will be scheduled for the fall season. The goal is to reduce to a minimum the amount of water that will be required to establish the plantings.

A summary of the project background, a location map, and master plan are included as attachments to this report.

Policy Considerations:
Providing parks and recreation facilities is consistent with the City's strategic plan to enhance livability in Sacramento's neighborhoods by expanding park, recreation, and trail facilities throughout the City. This is also part of the Park Development Process for park planning as stated in the 2005-2010 Parks and Recreation Master Plan.

Sacramento City Code Chapter 3.60 identifies the requirements for bidding and awarding construction contracts for public projects over $100,000.

Economic Impacts:
This park construction project, which totals $836,360, is expected to create 3.40 total jobs (1.92 direct jobs and 1.42 additional jobs through indirect and induced activities). Furthermore, it will create $516,398 in total economic output ($325,490 of direct output and another $190,908 of output through indirect and induced activities).

Environmental Considerations:

California Environmental Quality Act (CEQA):

The Development Services Department, Environmental Planning Services Division has reviewed this project and determined that it is exempt from the provisions of the California Environmental Quality Act (CEQA) under sections 15301, 15303, and 15304(b) of the CEQA Guidelines. Projects exempted under Section 15301 consist of repair and minor alteration of existing structures or facilities. Projects exempted under Section 15303 consist of new construction or conversion of limited numbers of new, small structures or facilities. Projects exempted under Section 15304(b) consist of new gardening or landscaping.

Sustainability:
The Dogwood Park development project has been reviewed for consistency with the goals, policies, and targets of the City's Sustainability Master Plan (SMP), the Parks and Recreation Sustainability Plan, and the 2030 General Plan. The project will advance the goals, policies, and targets of these plans by improving the health of residents through access to a diverse mix of wellness and recreation activities. The park improvements are also consistent with sustainable design through the use of water efficient irrigation, recycled materials, drought-tolerant plantings to minimize water use, and use of local vendors.

Committee/Commission Action:

On January 3, 2008, the Dogwood Park Master Plan was reviewed and supported by the Parks and Recreation Commission.

Rationale for Recommendation:

The formal bidding process for the Dogwood Park project was posted in accordance with City Code 3.60 and Administrative Policy Instruction #48. The bids were opened on December 11, 2013. Staff received 14 bids and the results are listed below:

CONTRACTOR	Base Bid	Additive Alternates 1 & 2	Total Bid
ABIDE BUILDERS	$764,360	$72,000	$836,360
B & M BUILDERS	$773,988	$82,515	$856,503
JM SLOVER, INC.	$776,388	$73,535	$849,923
OLYMPIC LAND CONSTRUCTION	$788,355	$88,070	$876,425

HEMINGTON LANDSCAPE SERVICES	$792,445	$73,780	$866,225
GREEN VALLEY LANDSCAPE	$808,184	$81,100	$889,284
DOMINQUEZ LANDSCAPE	$825,455	$50,146	$875,601
NATURESCAPES	$828,939	$88,500	$917,439
SWANK CONSTRUCTION	$849,210	$78,600	$927,810
WABO LANDSCAPE	$868,640	$77,000	$945,640
GRAND SIERRA CONSTUCTION	$883,367	$86,295	$969,662
SIERRA VALLEY CONSTRUCITON	$892,685	$84,308	$976,993
SW ALLEN CONSTRUCTION	$930,453	$86,202	$1,016,655
GOODLAND LANDSCAPE CONSTRUCTION	$968,452	$75,700	$1,044,152

Naturescapes' bid is considered non-responsive. The firm does not hold the required license (Class A) for this project and they did not list dollar amounts in the subcontractor listing.

The Engineer's Estimate for the base bid of this project was $831,364.

Pursuant to City Code Section 3.60.020, it was determined that Abide Builders, Inc. had the lowest, responsible base bid.

Financial Considerations:

There are sufficient Quimby funds (Fund 2508) in L19185000 to award the contract and to complete the project.

There are sufficient funds in the North Natomas Lands Community Facilities District 3 (Fund2230) for ongoing maintenance and utilities for this park development.

Local Business Enterprise (LBE):

LBE requirements were waived pursuant to Addendum No. 2.

Background:

Dogwood Park is a 3.02 acre neighborhood park located at 3075 Macon Drive in North Natomas, Council District 1.

The Dogwood Park Master Plan was developed through the public review process, which included review and support by the public at meetings on August 20 and November 8, 2007.

The Parks and Recreation Commission unanimously approved the Master Plan on January 8, 2008.

On April 1, 2008, the City Council approved the Master Plan, environmental documents, and park name 'Dogwood Park.'

Construction of Dogwood Park is expected to be completed in fall 2014.

City of Sacramento
Department of Parks and Recreation
Dogwood Park Site

O:\GIS_Projects\Parks\Projects\PPDD\park_dogwood.mxd/pdf | November 28, 2007 jch

Back to Report Table of Contents

LEGEND

1. BOCCE AND HORSESHOE COURTS WITH BENCHES AND PLANTERS
2. FABRIC SHADE STRUCTURE
3. RUBBERIZED SURFACING REPRESENTING A STREAM CONTINUED FROM THE MAIN ENTRANCE
4. SHADED PICNIC AREA WITH GROUP GRILL AND SEATING
5. TIKE RACE TRACK INCLUDES UNDULATIONS, TRAFFIC SIGNS AND CURVES
6. FITNESS AREA STATIONS WITH VARIOUS EXERCISE EQUIPMENT (CHEST PRESS, BUTTERFLY, LEG PRESS ETC.)
7. JOGGING PATH MEANDERS AROUND THE PERIMETER TOUCHING ALL THE FITNESS STATIONS
8. YOUTH AND ADULT HALF BASKETBALL COURTS
9. WALKWAY
10. INDEPENDENT PICNIC AREAS LOCATED IN QUIET PRIVATE SETTINGS
11. BANTAM SOCCER FIELD/ MULTI-PURPOSE FIELD
12. NO MOW FESCUE PROVIDES A NATURAL BUFFER
13. EARTH MOUND WITH FUN STEPPING STONES SET IN A SPIRAL
14. INFORMAL SEATING MOUNDS OFFER SEATING
15. INTERACTIVE WATER PLAY AREA WITH LARGE LEAF DESIGN PROVIDING COOL MIST
16. DOGWOOD PARK ENTRY WITH PARK SIGN
17. ADVENTURE PLAY AREA
18. ROCK WALL ART WORK
19. NATURAL TREE BUFFER WITH PLANTING UNDERSTORY

MASTER PLAN FOR

DOGWOOD PARK (3.7 AC)

CITY OF SACRAMENTO, CALIFORNIA

0 10 20 40 60

SCALE: 1"= 20'-0"

NORTH

LANDSCAPE ARCHITECT
D. DAY
DESIGNED BY
JON BOWHAY
DATE:
NOVEMBER 2007

City of SACRAMENTO
Parks and Recreation

CONTRACT SPECIFICATIONS
FOR
DOGWOOD PARK DEVELOPMENT
(L19185000)

Plans Attached

For Pre-Bid Information Call:
DENNIS DAY, Project Manager
(916) 808-7633

Bids to be received before
2:00 PM, Wednesday,
DECEMBER 11, 2013
Historic City Hall
915 I Street, 1st Floor
Sacramento, CA 95814

NEW PROGRAM REQUIREMENTS

EMERGING AND SMALL BUSINESS REQUIREMENTS: In order to meet City Emerging and Small Business Enterprise (E/SBE) project goals, it is recommended that the bidder attend a Small Business Development (E/SBD) program meeting. Meetings by appointment only. Call (916) 808-7223 to set up appointment if necessary. Economic Development Department, 915 I Street, New City Hall, 3rd Floor, Sacramento, CA 95814.

Estimated Construction Cost: $831,634-$952,502

Construction Time: EIGHTY (80) WORKING DAYS

TABLE OF CONTENTS

	Pages
Formal Bid Proposal Delivery Options	1 only
Invitation to Bid	1 - 2
ESBE Requirements	1 - 4
Apprenticeship Standards- link to www.dir.ca.gov	1 only
Non-Discrimination in Employee Benefits by City Contractors Ordinance	1- 9
Bid Proposal Document	1 – 6
Local Business Enterprise Preference Program- only projects <100K	1 - 3
Bid Proposal Guarantee	1 only
Minimum Qualifications Questionnaire	1- 6
Green Contracting Survey	1 - 3
Drug Free Work Place	1 only
Subcontractor Form	1 only
Contract	1- 17
Performance Bond	1 only
Payment Bond	1 only
Certificate of Insurance	1 only
Worker's Compensation Certification	1 only
Pay Request Application	1 only
Schedule of Values	1 - 4
Guarantee	1 only
Special Provisions	1 – 81
Plans	1- 21
Attachment A- Geotechnical Report	1 – 28
Attachment B- SWPP Details	1 – 86
Attachment C- Debris Ordinance	1 - 11

City of Sacramento
Formal Bid / Proposal Delivery Options

Any vendor and/or consultant submitting an official bid or proposal to the City of Sacramento City Clerk's Office, shall select one of the following delivery options. To ensure responsive receipt of bids and/or proposals within established submission deadlines, address information must exactly match one of the below options.

Effective April 17, 2009, the City of Sacramento's receiving hours are 8am to Noon Monday through Friday. If sending bids via Option 2 - Expedited Services, the bid must be delivered prior to noon or it will not be delivered until the following business day. The City of Sacramento is not responsible for the late receipt of bids and/or proposals where the proposer did not adhere to one of the available delivery options.

Option	Service Provider and/or Service Types	Address
1.	**United States Postal Service (USPS)** - Regular First Class - Certified or Return Receipt - Priority - Express	Sacramento City Clerk's Office *P.O. Box 122391* Sacramento, CA 95812-2391
2.	**Expedited Services – Receiving Hours are 8am to Noon Monday through Friday** - FedEx - UPS - DHL	Sacramento City Clerk's Office *915 I Street, Ste. 122391* Sacramento, CA 95814-2604
3.	**Personal Delivery** - Hand Delivery - Courier	Sacramento City Clerk's Office *Historic City Hall* *915 I Street, Ste. 116* Sacramento, CA 95814

Updated 11/7/2013 @ 11:10:58 AM

Sealed Proposals will be received by the City Clerk of the City of Sacramento at the office of the City Clerk, City Hall, 1st Floor, located at 915 I Street between 9th and 10th Streets, up to the hour of **2:00 PM** on **DECEMBER 11, 2013** and will be opened as soon thereafter as business allows, in the Council Chambers, City Hall for:

DOGWOOD PARK DEVELOPMENT (L19185000)

as set forth in the Contract Documents.

Proposals received and work performed thereunder shall comply with the requirements of Title 3 of the Sacramento City Code. Each Bid Proposal shall be accompanied by bid security of at least 10% of the sum of the Bid Proposal which conforms to the requirements of Section 7.0 of the Instructions to Bidders. The right to reject Proposals or to waive any error or omission in any Bid Proposal received is reserved by the City. Signed proposals shall be submitted on the printed forms contained in the Project Manual and enclosed in an envelope marked: Sealed Bid Proposal for:

DOGWOOD PARK DEVELOPMENT (L19185000)

EBE AND SBE CERTIFICATION STATEMENTS ARE DUE BY THE CLOSE OF BUSINESS TWO DAYS AFTER BID OPENING to:
Tim Hopper, Department of General Services, Procurement Division
5730 24TH Street, Bldg. 1, Sacramento, CA 95822
Phone: (916) 808-8173/ Fax: (916) 808-8266/ Email: thopper@cityofsacramento.org
Failure to submit the required ESBE information may be grounds for finding the bid non-responsive.

You can view and download the plans and Contract Documents from:

PLANET BIDS
http://www.planetbids.com/portal/portal.cfm?CompanyID=15300#

Subcontractors shall comply with the rates of wages currently established by the Director of Industrial Relations under provisions of Sections 1773 of the Labor Code of the State of California, a copy of which is on file in the office of the City Clerk. In accordance with Sacramento City Code Section 3.60.180 and Section 1771.5 of the California Labor Code, the payment of the general prevailing rate of per diem wages or the general prevailing rate of per diem wages for holiday and overtime is not required for any Public Construction project of $25,000 or less, or Public Maintenance project of $15,000 or less. The City of Sacramento has an approved Labor Compliance Program. **The City uses an electronic system for the submission of Labor Compliance Reports, which became effective May 1, 2007.** Each contractor and every lower-tier subcontractor submits certified payrolls and labor compliance documentation electronically at the discretion of and in the manner specified by the City of Sacramento.

Electronic submittal is via a web-based system, accessed on the World Wide Web by a web browser. Each contractor and subcontractor is given a Log On identification and password to access the City of Sacramento's reporting system.

Use of the system may entail additional data entry of weekly payroll information including; employee identification, labor classification, total hours worked and hours worked on this project, wage and benefit rates paid, etc. The contractor's payroll and accounting software might be capable of generating a 'comma delimited file' that will interface with the software.

Disseminate these provisions to every lower-tier subcontractor and vendor required to provide labor compliance documentation.

All questions regarding this Labor Compliance Program should be directed to the department's contracts staff or Contracts Services at (916) 808-5524.

Pursuant to Sacramento City Code Section 3.60.250, any Agreement awarded pursuant to this Invitation to Bid shall contain a provision permitting the substitution of securities for any monies withheld to ensure performance under the Agreement. The terms of such provisions shall be according to the requirements and the form required by the City.

Bid protests must be filled and maintained in accordance with the provisions of Sections 3.60.460 through 3.60.560 of the Sacramento City Code. Bid protests that do not comply with Sections 3.60.460 through 3.60.560 of the Sacramento City Code shall be invalid and shall not be considered. A bid protest fee of $750.00 is required at the time of filing to be considered valid in accordance with City of Sacramento Resolution No. 2003-231 dated April 29, 2003. As used herein, the term "bid protest" includes any bid protest that (1) claims that one or more bidders on this contract should be disqualified or rejected for any reason, or (2) contests a City staff recommendation to award this contract to a particular bidder, or (3) contests a City staff recommendation to disqualify or reject one or more bidders on this contract. A copy of Sections 3.60.460 through 3.60.560 of the Sacramento City Code may be obtained from the Project Manager, or from the City Clerk, located at 915 I Street, 1st Floor, Sacramento, CA 95814.

ESBE REQUIREMENTS

(City Construction Contracts no Federal Funds Used)

I. ESBE PARTICIPATION REQUIREMENT

On February 9, 1999, the Sacramento City Council adopted an Emerging and Small Business Development (ESBD) program to provide enhanced opportunities for the participation of small business enterprises (SBEs) and emerging business enterprises (EBEs) in the City's contracting and procurement activities. The ESBD program establishes an annual emerging and small business enterprise (ESBE) participation goal for City contracts, and authorizes City departments to require minimum ESBE participation levels in individual contracts so that the annual ESBE participation goal can be met. Under City Code section 3.60.270, when the bid specifications for a City contract establish a minimum participation level for ESBEs, no bidder on the contract shall be considered a responsive bidder unless its bid meets the minimum ESBE participation level required by the bid specifications.

The City has established **a minimum 20% participation level for ESBEs on this contract**. Pursuant to City code Section 3.60.270, no bidder on this contract shall be considered a responsive bidder unless its bid meets or exceeds this minimum participation level.

Bidders shall submit copies of their Certification as a SBE or EBE, and the SBE or EBE Certifications for each subcontractor, supplier, or other SBE or EBE business entity listed in the bidder's sealed proposal, within two (2) working days after being requested to do so by City. Failure to submit the requested ESBE information within this time period will be grounds for finding the bid non-responsive.

II. ESBE CERTIFICATION

A. A SBE designated in the bid must be certified as such by the State of California, Department of General Services, or by the City, prior to the time bids are received by the City.

B. An EBE designated in the bid must be certified as such by the City prior to the time bids are received by the City.

III. DETERMINATION OF ESBE PARTICIPATION LEVEL

A. ESBE Participation: The percent of ESBE participation shall be determined based on the dollar value of the work to be performed or supplies to be furnished by certified ESBEs designated in the bidder's Subcontractor and ESBE Participation Verification Form, relative to the total dollar amount of the bid.

B. Participation Credit: To receive credit for participation:(1) an ESBE subcontractor must be responsible for the execution of a distinct element of the work, must possess any license or certification required for the work, and must carry its

responsibility by actually performing, managing, or supervising the work without subcontracting or otherwise shifting any portion of the work to another subcontractor; and (2) an ESBE supplier must be furnishing materials, equipment, or supplies that the supplier sells as a recurring, although not necessarily primary, part of its business, and that are necessary for performance of the work.

C. ESBE Bidders: The dollar value listed for an ESBE bidder on the bidder's Subcontractor and ESBE Participation Verification Form shall include only the amount of work to be performed by the ESBE bidder, and shall not include any amount to be paid by the ESBE bidder for the cost of materials, equipment, or supplies.

D. Suppliers: Credit for an ESBE supplier of materials, equipment, or supplies is counted as one hundred (100) percent of the amount paid to the supplier for the material, equipment, or supplies. To receive this credit, ESBE suppliers must be listed on the bidder's Subcontractor and ESBE Participation Verification Form.

E. Subcontractors (including truckers): To receive credit for an ESBE subcontractor, the subcontractor must be listed on the bidder's Subcontractor and ESBE Participation Verification Form. The dollar value listed for a subcontractor on the bidder's Subcontractor and ESBE Participation Verification Form shall not include any amount to be paid to the subcontractor for the cost of materials, equipment, or supplies.

- Truckers: Credit for an ESBE trucker is counted as one hundred (100) percent of the amount paid to the trucker for trucking services, not including any amount paid to the trucker for the cost of any materials, equipment, or supplies being transported by the trucker.

IV. ESBE REQUIREMENTS FOR CONTRACTOR

A. ESBE Records: The Contractor shall maintain records of all subcontracts with certified ESBE subcontractors and records of materials purchased from certified ESBE suppliers for one (1) year after receiving final payment from the City. Such records shall show the name and business address of each ESBE subcontractor or supplier and the total dollar amount actually paid each ESBE subcontractor or supplier.

Not later than 30 days after completion of the work performed under the contract, a summary of these records shall be prepared, certified correct by the Contractor's authorized representative and furnished to the City. The Contractor shall provide such other information, records, reports, certifications or other documents as may be required by City, to determine compliance with any provision of the ESBD program or these specifications.

B. Performance of ESBE Subcontractors and Suppliers: The ESBEs listed by the Contractor shall perform the work and supply the materials, equipment, and supplies for which they are listed unless the Contractor has received prior written

authorization from the City to perform the work with other forces or to obtain the material, equipment, or supplies from other sources. Reasons for requesting such authorization would include:

1. The listed ESBE fails to execute a written contract based upon the general terms, conditions, plans, and specifications for the project.

2. The listed ESBE becomes bankrupt or insolvent.

3. The listed ESBE subcontractor fails to meet the bond requirements of the Contractor.

4. The work performed or the materials/equipment/supplies provided by the listed ESBE are unsatisfactory or are not in accordance with the plans and specifications, or the listed ESBE fails to perform its contractual obligations.

5. It would be in the best interest of the City.

C. Subcontractor Substitution: No substitution of an ESBE subcontractor shall be made at any time without compliance with the Subletting and Subcontracting Fair Practices Act. If an ESBE subcontractor is unable to perform successfully and is to be replaced, the Contractor shall make reasonable efforts to replace the original ESBE subcontractor with another certified ESBE subcontractor. The new ESBE subcontractor must be certified at the time of substitution.

D. Reporting and Utilization Requirements and Sanctions: Failure to provide specific information, records, reports, certifications, or any other documents required for compliance with these specifications, or failure to utilize one or more ESBEs in substantial compliance with the ESBE utilization indicated in the Contractor's bid (unless otherwise authorized by City as provided herein, or when such failure results from changes to the work approved by the City), shall be considered a breach of the contract, and a deduction may be made from the contract amount. The deduction shall be not more than ten (10) percent of the value of the work or materials/equipment/supplies that the subject ESBE(s) were listed to perform/provide in the Contractor's bid, and shall be deducted from any payment due to the Contractor. This is in addition to any deduction that may be made under any other provision of the contract, the Sacramento City Code, or State law.

E. Hearing and Review of Division Manager Decision: Prior to making a deduction pursuant to Section IV(D), above, the City shall provide written notice of the proposed deduction to the Contractor, and the Contractor may, not later than five (5) working days after receiving such notice, provide a written request to City for a hearing to contest the proposed deduction. Upon receipt of a timely written request from the Contractor, the City shall schedule a hearing before the Division Manager (as defined in the City's Standard Specifications for Public Construction), and written notice of the date, time and location of the hearing shall be provided to the Contractor not less than five (5) working days prior to the date of the hearing. The hearing shall be conducted in the manner specified in Section 4-8 of the

Standard Specifications, and the Division Manager shall prepare and forward to the Contractor a written decision as soon as practicable after the hearing. The Division Manager's decision shall be subject to review in accordance with the provisions of Section 4-9 of the Standard Specifications. Failure to request such review in compliance with the requirements set forth in Section 4-9 shall constitute acceptance of the Division Manager's decision by the Contractor.

The written notices and requests described above shall be provided by registered or certified mail (return receipt requested), by telecopy, by personal delivery, or by any other method that provides reliable evidence of the date of receipt. Written notice provided by telecopy shall be deemed received on the date that it is transmitted and transmission is confirmed by the transmitting machine. Written notice provided by personal delivery shall be deemed received on the date of delivery.

V. DEFINITIONS

A. Emerging Business Enterprise (EBE): The City shall certify EBEs utilizing the small business certification criteria and standards of the State of California, General Services Department, Office of Small Business and DVBE Services, that were in effect on December 1, 1998, provided that the size standard, industry by industry, shall be set at 50% of the State small business certification criteria and standards that were in effect on December 1, 1998.

B. Small Business Enterprise (SBE): The City shall certify SBEs utilizing the current small business certification criteria and standards of the State of California, General Services Department, Office of Small Business and DVBE Services. The City will also accept State certified SBEs.

C. The small business certification criteria and standards of the State of California, General Services Department, Office of Small Business and DVBE Services shall be used only for the purpose of determining whether a firm may receive certification as an EBE or SBE.

D. Contractor: The sole proprietorship, partnership, limited liability company, corporation, or any other business entity entering into a contract with the City of Sacramento.

E. Subcontractor: The sole proprietorship, partnership, limited liability company, corporation, or other business entity entering into a contract with the prime contractor to perform a portion of the work.

F. Supplier: The sole proprietorship, partnership, limited liability company, corporation, or other business entity entering into a contract with the prime contractor to provide materials, equipment, or supplies necessary for performance of the work.

CALIFORNIA LABOR CODE RELATING TO APPRENTICES ON PUBLIC WORKS PROJECTS

See following links: www.dir.ca.gov and/or www.leginfo.ca.gov

REQUIREMENTS OF THE NON-DISCRIMINATION IN EMPLOYEE BENEFITS CODE

INTRODUCTION

The Sacramento Non-Discrimination In Employee Benefits Code (the "Ordinance"), codified as Sacramento City Code Chapter 3.54, prohibits City contractors from discriminating in the provision of employee benefits between employees with spouses and employees with domestic partners, and between the spouses and domestic partners of employees.

APPLICATION

The provisions of the Ordinance apply to any contract or agreement (as defined below), between a Contractor and the City of Sacramento, in an amount exceeding $100,000.00. The Ordinance applies to that portion of a contractor's operations that occur: (i) within the City of Sacramento; (ii) on real property outside the City of Sacramento if the property is owned by the City or if the City has a right to occupy the property; or (iii) at any location where a significant amount of work related to a City contract is being performed.

The Ordinance does not apply: to subcontractors or subcontracts of any Contractor or contractors; to transactions entered into pursuant to cooperative purchasing agreements approved by the Sacramento City Council; to legal contracts of other governmental jurisdictions or public agencies without separate competitive bidding by the City; where the requirements of the ordinance will violate or are inconsistent with the terms or conditions of a grant, subvention or agreement with a public agency or the instructions of an authorized representative of any such agency with respect to any such grant, subvention or agreement; to permits for excavation or street construction; or to agreements for the use of City right-of-way where a contracting utility has the power of eminent domain.

DEFINITIONS

As set forth in the Ordinance, the following definitions apply:

"Contract" means an agreement for public works or improvements to be performed, or for goods or services to be purchased or grants to be provided, at the expense of the City or to be paid out of moneys deposited in the treasury or out of the trust money under the control or collected by the City. "Contract" also means a written agreement for the exclusive use ("exclusive use" means the right to use or occupy real property to the exclusion of others, other than the right reserved by the fee owner) or occupancy of real property for a term exceeding 29 days in any calendar year, whether by singular or cumulative instrument, (i) for the operation or use by others of real property owned or controlled by the City for the operation of a business, social, or other establishment or organization, including leases, concessions, franchises and easements, or (ii) for the City's use or occupancy of real property owned by others, including leases, concessions, franchises and easements.

"Contract" shall not include: a revocable at-will use or encroachment permit for the use of or encroachment on City property regardless of the ultimate duration of such permit; excavation, street construction or street use permits; agreements for the use of City right-of-way where a contracting utility has the power of eminent domain; or agreements governing the use of City property that constitute a public forum for activities that are primarily for the purpose of espousing or advocating causes or ideas and that are generally protected by the First Amendment to the United States Constitution or that are primarily recreational in nature.

"Contractor" means any person or persons, firm partnership or corporation, company, or combination thereof, that enters into a Contract with the City. "Contractor" does not include a public entity.

"Domestic Partner" means any person who has a currently registered domestic partnership with a governmental entity pursuant to state or local law authorizing the registration.

"Employee Benefits" means bereavement leave; disability, life, and other types of insurance; family medical leave; health benefits; membership or membership discounts; moving expenses; pension and retirement benefits; vacation; travel benefits; and any other benefit given to employees. "Employee benefits" shall not include benefits to the extent that the application of the requirements of this chapter to such benefits may be preempted by federal or state.

CONTRACTOR'S OBLIGATION TO PROVIDE THE CITY WITH DOCUMENTATION AND INFORMATION

Contractor shall provide the City with documentation and information verifying its compliance with the requirements of the Ordinance within ten (10) days of receipt of a request from the City. Contractors shall keep accurate payroll records, showing, for each City Contract, the employee's name, address, Social Security number, work classification, straight time pay rate, overtime pay rate, overtime hours worked, status and exemptions, and benefits for each day and pay period that the employee works on the City Contract. Each request for payroll records shall be accompanied by an affidavit to be completed and returned by the Contractor, as stated, attesting that the information contained in the payroll records is true and correct, and that the Contractor has complied with the requirements of the Ordinance. A violation of the Ordinance or noncompliance with the requirements of the Ordinance shall constitute a breach of contract.

EMPLOYER COMPLIANCE CERTIFICATE AND NOTICE REQUIREMENTS

(a) All contractors seeking a Contract subject to the Ordinance shall submit a completed Declaration of Compliance Form (attachment "A"), signed by an authorized representative, with each proposal, bid or application. The Declaration of Compliance shall be made a part of the executed contract, and will be made available for public inspection and copying during regular business hours.

(b) The Contractor shall give each existing employee working directing on a City contract, and (at the time of hire), each new employee, a copy of the notification provided as attachment "B."

(c) Contractor shall post, in a place visible to all employees, a copy of the notice provided as attachment "C."

DECLARATION OF COMPLIANCE
Equal Benefits Ordinance

Abide Builders
Name of Contractor

825 Riverside Pkwy 120 West Sacramento 95605
Address

The above named contractor ("Contractor") hereby declares and agrees as follows:

1. I have read and understand the Requirements of the Non-Discrimination In Employee Benefits Code (the "Requirements") provided to me by the City of Sacramento ("City") in connection with the City's request for proposals or other solicitations for the performance of services, or for the provision of commodities, under a City contract or agreement ("Contract").

2. As a condition of receiving the City Contract, I agree to fully comply with the Requirements, as well as any additional requirements that may be specified in the City's Non-Discrimination in Employee Benefits Code codified at Chapter 3. 54 of the Sacramento City Code (the "Ordinance").

3. I understand, to the extent that such benefits are not preempted or prohibited by federal or state law, employee benefits covered by the Ordinance, are any of the following:

   a. Bereavement Leave
   b. Disability, life, and other types of insurance
   c. Family medical leave
   d. Health benefits
   e. Membership or membership discounts
   f. Moving expenses
   g. Pension and retirement benefits
   h. Vacation
   i. Travel benefits
   j. Any other benefit offered to employees

   I agree that should I offer any of the above listed employee benefits, that I will offer those benefits, without discrimination between employees with spouses and employees with domestic partners, and without discrimination between the spouses and domestic partners of such employees.

4. I understand that I will not be considered to be discriminating in the provision or application of employee benefits under the following conditions or circumstances:

DECLARATION OF COMPLIANCE
Equal Benefits Ordinance

a. In the event that the actual cost of providing a benefit to a domestic partner or spouse, exceeds the cost of providing the same benefit to a spouse or domestic partner of an employee, I will not be required to provide the benefit, nor shall it be deemed discriminatory, if I require the employee to pay the monetary difference in order to provide the benefit to the domestic partner or to the spouse.

b. In the event I am unable to provide a certain benefit, despite taking reasonable measures to do so, if I provide the employee with a cash equivalent, I will not be deemed to be discriminating in the application of that benefit.

c. If I provide employee benefits neither to employee's spouses nor to employee's domestic partners.

d. If I provide employee benefits to employees on a basis unrelated to marital or domestic partner status.

e. If I submit, to the Program Coordinator, written evidence of making reasonable efforts to end discrimination in employee benefits by implementing policies which are to be enacted before the first effective date after the first open enrollment process following the date the Contract is executed with the City.

   I understand that any delay in the implementation of such policies may not exceed one (1) year from the date the Contract is executed with the City, and applies only to those employee benefits for which an open enrollment process is applicable.

f. Until administrative steps can be taken to incorporate, in the infrastructure, nondiscrimination in employee benefits

   The time allotted for these administrative steps will apply only to those employee benefits for which administrative steps are necessary and may not exceed three (3) months from the date the Contract is executed with the City.

g. Until the expiration of a current collective bargaining agreement(s) where, in fact, employee benefits are governed by a collective bargaining agreement(s).

h. I take all reasonable measures to end discrimination in employee benefits by either requesting the union(s) involved agree to reopen the agreement(s) in order for me to take whatever steps are necessary to end discrimination in employee benefits or by my ending discrimination in employee benefits without reopening the collective bargaining agreement(s).

DECLARATION OF COMPLIANCE
Equal Benefits Ordinance

i. In the event I cannot end discrimination in employee benefits despite taking all reasonable measures to do so, I provide a cash equivalent to eligible employees for whom employee benefits (as listed previously), are not available.

Unless otherwise authorized in writing by the City Manager, I understand this cash equivalent must begin at the time the union(s) refuse to allow the collective bargaining agreement(s) to be reopened or no longer than three (3) months from the date the Contract is executed with the City.

5. I understand that failure to comply with the provisions of Section 4. (a) through 4. (i), above, will subject me to possible suspension and/or termination of this Contract for cause; repayment of any or all of the Contract amount disbursed by the City; debarment for future contracts until all penalties and restitution have been paid in full; deemed ineligible for future contracts for up to two (2) years; the imposition of a penalty, payable to the City, in the sum of $50.00 for each employee, for each calendar day during which the employee was discriminated against in violation of the provisions of the Ordinance.

6. I understand and do hereby agree to provide each current employee and, within ten (10) days of hire, each new employee, of their rights under the Ordinance. I further agree to maintain a copy of each such letter provided, in an appropriate file for possible inspection by an authorized representative of the City. I also agree to prominently display a poster informing each employee of these rights.

7. I understand that I have the right to request an exemption to the benefit provisions of the Ordinance when such a request is submitted to the Procurement Services Division, in writing with sufficient justification for resolution, prior to contract award.

I further understand that the City may request a waiver or exemption to the provisions or requirements of the Ordinance, when only one contractor is available to enter into a contract or agreement to occupy and use City property on terms and conditions established by the City; when sole source conditions exist for goods, services, public project or improvements and related construction services; when there are no responsive bidders to the Ordinance requirements and the
contract is for essential goods or services; when emergency conditions with public health and safety implications exist; or when the contract is for specialized legal services if in the best interest of the City.

8. In consideration of the foregoing, I shall defend, indemnify and hold harmless, the City, its officers and employees, against any claims, actions, damages, costs (including reasonable attorney fees), or other liabilities of any kind arising from any violation of the Requirements or of the Ordinance by
me.

DECLARATION OF COMPLIANCE
Equal Benefits Ordinance

I declare under penalty of perjury under the laws of the State of California that the foregoing is true and correct, and that I am authorized to bind the Contractor to the provisions of this Declaration.

Signature of Authorized Representative

1/15/14
Date

JEFF LOVITT
Print Name

V.P.
Title

YOUR RIGHTS UNDER THE CITY OF SACRAMENTO'S NON-DISCRIMINATION IN EMPLOYEE BENEFITS BY CITY CONTRACTORS ORDINANCE

If your employer provides employee benefits, they must be provided to those employees working on a City of Sacramento contract without discriminating between employees with spouses and employees with domestic partners.

The included employee benefits are:

- Bereavement leave
- Disability, life and other types of insurance
- Family medical leave
- Health benefits
- Membership or membership discounts
- Moving expenses
- Pension and retirement benefits
- Vacation
- Travel benefits
- Any other benefits given to employees

If you feel you have been discriminated against by your employer . . .

You May . . .

- Submit a written complaint to the City of Sacramento, Contract Services Unit, containing the details of the alleged violation. The address is:

  City of Sacramento
  Contract Services Unit
  915 I St., 2nd Floor
  Sacramento, CA 95814

- Bring an action in the appropriate division of the Superior Court of the State of California against the employer and obtain reinstatement, injunctive relief, compensatory damages, punitive damages and reasonable attorney's fees and costs.

Discrimination and Retaliation Prohibited.

If you feel you have been discriminated or retaliated against by your employer in the terms and conditions of your application for employment, or in your employment, because of your status as an applicant or as an employee protected by the Ordinance, or because you reported a violation of this Ordinance . . .

You May Also . . .

Submit a written complaint to the City of Sacramento, Contract Services Unit, at the same address, containing the details of the alleged violation.

BID PROPOSAL FORMS

PLEASE REMOVE AND

COMPLETE

THE FOLLOWING DOCUMENTS

AND

SUBMIT AS

THE BID PROPOSAL

PACKAGE

City of
SACRAMENTO
Parks and Recreation

DOGWOOD PARK DEVELOPMENT
(L19185000)
(Addendum #3)

B14190021005

December 4, 2013

To all Potential Bidders:

Attached hereto are addenda items, which shall be incorporated into the request for proposal for above noted project. These changes shall be considered as part of the original documents, as if they were originally provided therein, and as such shall be used as contractual documents. All other terms, conditions, and specifications of the bid remain unchanged. Bidders must acknowledge receipt of this addendum prior to the hour and date specified in the bid request, or as amended, by one of the following methods:

(a) By acknowledging receipt, on the proposal form submitted; or
(b) By separate letter or telegram which includes a reference to the bid request and addendum number.

Failure to acknowledge receipt of this addendum in one of the above methods and cause acknowledgment to be received at the Clerk's Office, 915 I Street, City Hall, 1st Floor, Sacramento, CA 95814-2671, prior to the hour and date specified for receipt of bids, may result in rejection of your offer. If by virtue of this addendum you decide to change an offer already submitted, such change may be made by telegram or letter, provided such telegram or letter makes reference to the bid request number and this addendum, and is received prior to the opening hour and date specified.

For any contractual questions related to this Addendum, contact Tim Hopper at (916) 808-8173. For technical questions contact the project manager: DENNIS DAY at (916) 808-7633.

Very truly yours,

T. Hopper

Tim Hopper
Contracts & Compliance Specialist
Department of General Services

Enclosure

Clerk's Office

c: Distribution List
Planholders

h:\documents\contract mgmt\dogwood park\dogwood park improvements\addendums\addendum 3\addendum #3ltr-parks.docx

Bid Number: B14190021005

ADDENDUM #3 DATES: December 4, 2013

DOGWOOD PARK DEVELOPMENT
(L19185000)

Addendum #2 includes:

Plan - Correction:

1. On sheet L3, Grading and Drainage Plan: Add the following sentence to Grading and Drainage Note # 17: "If off-haul of excess soil generated from the project is required, the Contractor will be allowed to take the clean material free of debris to the undeveloped section (100+ acres) of the North Natomas Regional Park at Natomas Blvd. at North Bend Dr. The site has construction vehicle access, and the Contractor shall spread and graded the off-hauled soil to drain."

2. On sheet L6, Irrigation Plan: under Irrigation Key Notes, replaced Key Notes 1 and 2 with the following:

    1. Existing 2" Irrigation Water Service Stub. City will provide and install 2" Irrigation Water Service Meter. City Parks and Recreation Dept. will pay all meter fees and Water Development fees directly to the City of Sacramento, Utility Department. Contractor to provide and install approved Reduced Pressure Backflow Preventer per City Standard Drawings W-606.

    2. Existing 2" Irrigation Water Service Stub. City to provide and install 2" Domestic Water Service Meter. City Parks and Recreation Dept. will pay all meter fees and Water Development fees directly to the City of Sacramento, Utility Department. Contractor to provide and install approved Reduced Pressure Backflow Preventer per City Standard Drawings W-606.

Specification - Correction:

3. On Bid Item No. 45 – Booster Pump Assembly, replace the entire bid item specifications with the following new specification:

    Item No. 45 - Booster Pump Assembly
    This item shall consist of furnishing and installing a booster pump assembly as shown on the plan in conformance with these special provisions and the manufacturer's specifications.

    A. Booster Pump Assembly shall be by Custom Pump and Power, Inc.

    B. Custom*flow* Quality Booster Package™ Model 100CPPI08132013-1/60VFD; or approved equal. Booster pump assembly has been designed for Dogwood Park, Reference Number 100CPPI08132013-1/60VFD. Assembly, testing, startup, and service by Custom Pump & Power, Inc. Electrical supply to power the booster pump assembly shall be provided by the Contractor. Single- Phase: 230-Volt: 3-pole 60-Amp breaker for 31-amp load.

C. Custom*flow* Quality Booster Packages™ is designed to operate automatically through a control system. The irrigation system must provide (A) the water pressure through the plumbing connection and the (B) control device, The pressure source for the system can be city pressure, gravity, or a pump that creates or boosts the required pressures The control device can be a controller linked with a pump start relay, pressure switch, float switch, or flow switch for automatic operation. The basic function of the system will receive an external electrical signal, close a contact transferring the power to the motor and the pump is activated. When the demand stops, the contacts open and subsequently the pump turns off.

D. Conditions: Maximum flow: 100- GPM with 66 PSI boost: Electrical service 230 -volt: Single-phase: 24VAC-pump start assembled and mounted above ground in a weatherproof enclosure.

All work shall comply with the City of Sacramento Standard Specifications and shall meet applicable federal, state, and local building codes, including permits as required.

Design and install booster pump with electrical supply including permits and applicable fees.

Motor and pump sizing according to specifications. Pump brands used (or approved equal):

- Berkeley CB Series only, (B Series not allowed)
- Gould's 3656S
- Grundfos CR
- Franklin Pumps
- Peerless C

Pump control panel to be ETL/UL 508 listed, mounted in NEMA 12 blown and filtered enclosure with main circuit breaker door interlocked handle, Saftronics GP10' 2007 date code only, GE P11', Fuji VFD only with DC link choke, drive display on the door, fused 110-volt control, 150VA control transformer, one fault light on door, three control relays, optional output terminal for external fan. Custom Pump standard operating system.

E. VFD BOOSTER SPECIFICATION

1.0 General

1.1. This specification shall establish the minimum requirements for variable frequency duplex control panels. Equipment that does not meet these requirements shall not be acceptable.

2.0 Operation Conditions

2.1 The operating ambient temperature range shall be 0*C to 50*C (32* to 122*F). Storage temperatures shall be between –40*C to 50*C (-40* to 122*F).

2.2 The relative humidity range shall be 5-95% non-condensing.

2.3 The variable frequency drives shall be suitable for operation at altitudes up to 3300 ft. without de-rating. Elevation above 3300ft derate 1% per 328Ft up to 9900 ft.

2.4 The variable frequency drives have been vibration tested in accordance with IEC 68-2-34.

2.5 The variable frequency drives have been mechanical shock tested in accordance with IEC 68-2-27.

2.6 The variable frequency drives electromagnetic emissions is in compliance with EN50081-2.

2.7 The variable frequency drives electromagnetic immunity is in compliance with IEC801 and EN50082-2, and complies with EN61800-3 with built in filter.

3.0 Standards

3.1 The panel is UL 508A, cUL 508A, and ETL 508A listed.

3.2 The panel is designed in accordance with applicable portions of NEMA standards.

3.3 The panel is compatible with the installation requirements of interpretive codes such as National Electric Code (NEC) and Occupational Safety & Health Act (OSHA).

3.4 Standard enclosure sizes are 1Hp to 10Hp 200 to 230Volts or 1Hp to 20Hp 480Volts is 24"x 15"x 14", 15Hp 200 to 230Volts 24"x 20" x 14", 20Hp to 30Hp 200 to 230Volts or 480Volt is 30"x 24"x 14"

4.0 Input Power

4.1 The panel is to operate on 200 to 240Volts +/-10%, 380 to 480Volts +/-10% three-phase.

4.2 The frequency is to be 60Hz +/-5%.

4.3 The MOV voltage of the drive 160 Joules, 1400VDC clamping.

5.0 Output Power

5.1 The drive shall be capable of horsepower ratings for 1Hp to 2300Hp and output frequencies up to 3,000Hz. It shall also have an energy save feature with the capability of selecting a V/Hz automatic control function that will modify the V/Hz curve based on light load characteristics that will minimize power consumption.

5.2 The drive output voltage shall vary with frequency to maintain constant volts/hertz ratio up to base speed (60Hertz) output. Constant or linear voltage output shall be supplied at frequencies greater than base speed (60Hertz).

5.3 The drive one minute overload current rating shall be 110% of rated current for normal duty loads and 150% torque for heavy duty loads.

6.0 I/O Specification

6.1 Seven programmable digital inputs.

6.2 Digital inputs can be programmed for positive or negative logic.

6.3 Three analog inputs (Analog 1 0-10VDC, Analog 2 and 3 programmable for 0-10VDC, 0-20Ma, 4-20Ma, 20-0Ma, 20-4Ma, or thermistor input).

6.4 Two programmable analog outputs (programmable for 0-10VDC, 0-20Ma, or 4-20Ma).

6.5 Secure Disable input meets EN954-1 cat 3.

6.6 One programmable dry contact rated 240VAC 2A resistive.

6.7 24VDC external input for backup power supply.

7.0 Features

7.1 V/Hz standard default mode or can be programmed in open loop vector or rotor flux control mode.

7.2 Three zero space solution module slots for fieldbus and additional I/O.

7.3 Smartcard for simple setup and cloning of drive parameters.

7.4 External 24VDC backup control supply connection.

7.5 PLC functionality built in with IEC 61131-3 programming language.

7.6 Built in EMC filter.
7.7 Built in dynamic brake transistor.

8.0 Protective Features
8.1 Under Voltage DC Bus 175/350/435VDC, Under voltage trip (approximately 124/247/307VAC line voltage).
8.2 Over Voltage DC Bus 415/830/990VDC, Over voltage trip (approximately 293/587/700VAC line voltage).
8.3 MOV voltage 160 Joules, 1400VDC clamping.
8.4 Transient protection line to line and line to ground.
8.5 Drive overload trip programmable for normal duty or heavy duty operation.
8.6 Instantaneous over current trip is 225% of drive rating.
8.7 Phase loss trip due to DC bus ripple exceeded.
8.8 Over temperature trips; drive heatsink, control board, and option module monitoring.
8.9 Protects against phase to phase faults.
8.10 Protects against phase to ground faults.
8.11 Electronically protects the motor from overheating due to load conditions.
8.12 No flow shutdown with programmable auto restart attempts.

9.0 Quality Assurance
9.1 All panels shall be 100% tested to ensure proper performance upon delivery.
9.2 Three Year Warranty. Manufacturer required to provide authorized approval from Emerson/Inertia.
9.3 IFM Efector transducer PA3224 with shielded cable.
9.4 INOV8 temperature switch mounted on the pump volute with red fault light and reset on panel door.
9.5 American Granby liquid filled gauges mounted on intake and discharge manifold.
9.6 Nibco GD4765-3 butterfly valves with grooved connection line size for bypass and applicable line size for pump suction.
9.7 Anvil Check Valve
9.8 Galvanized plumbing within unit are grooved connections and fittings for 2" and larger, painted dark green.
9.9 Above ground galvanized drop pipes with grooved connections. Underground PVC connections and adaptors.
9.10 Booster pump assembly to be mounted on a level concrete pad 4" thick with a 3" apron all around including a minimum of three conduits for power and control wires.

F. Booster Pump Enclosure B:

- Standard enclosure size 48"X 36"X 44", uni-constructed two-piece with pivoting top and no hinges. Louvers on two sides for ventilation. Exhaust fan rated for 117 CFM, 115-volt, with finger guard for safety, external single muffin fan hood to shield from exposure. Pump and electrical panel mounted for easy service access. Powder coated dark green exterior and interior, all steel brackets and hardware for supports.
- Space for future flow sensor and meter valve downstream of the booster pump installation to be coordinated with City Irrigation Supervisor is required.
- Pumps equipped with mechanical shaft seals, back pull out designs with ample access to junction box.

- Requires recertification for system testing with documentation twelve months following turnover.
- Three year warranty following final acceptance on all equipment by City of Sacramento.
- Contractor to provide Operation & Maintenance manuals and special tools. (2 sets)
- Contractor to provide as-built for electrical and pumping system after acceptance. (2 sets)
- Contractor to provide equipment and assembly submittals prior to proceeding with work. (3 sets)
- Contractor to contact City Irrigation Supervisor for inspection of in ground plumbing before backfill.

Payment shall be made at the lump sum price bid and shall include full compensation for furnishing all labor, materials, tools, equipment and incidentals and for doing all work involved in Booster Pump Assembly as shown on the plans, as specified in these Special Provisions and as directed by the Landscape Architect.

4. On Add Alternate Item No. A3 – Turf Sod to Place, replace the entire specification with the following:

Add Alternate Item No. A3 – Turf Sod to Place

This item shall consist of the added cost to installing Turf Sod in the areas designated on the planting plan for turf Hydroseed in conformance with Sections 10 and 35 of the Standard Specifications and as amended by these Special Provisions. **If this additive alternate bid item is awarded then the contractor shall be paid for both the Turf Hydroseed and the Turf Sod to Place which will equal the total cost to place turf sod.**

A. Preparing of Planting Areas, paid under the bid item for Turf Hydroseeding to Install.

B. Weed Control paid under the bid item for Turf Hydroseeding to Install.

C. Soil Preparation Materials paid under the bid item for Turf Hydroseeding to Install.

D. Turf Sod shall consist of a the same turf mix indicated on the plans for turf Hydroseed, and shall conform to Section 10-42, and applicable paragraphs of Section 35-12 of the Standard Specifications and these Special Provisions.

E. Turf Starter Fertilizer paid under the bid item for Turf Hydroseeding to Install.

Payment shall be at the lump sum price bid, and shall include full compensation for furnishing all labor, material, tools, equipment and incidentals and for doing all work involved in completing Turf Sod to Place as shown on the plans, as specified in these Special Provisions and as directed by the Landscape Architect.

THE ORIGINAL BID DUE DATE OF DECEMBER 11, 2013, REMAINS THE SAME.

UNCHANGED PORTIONS OF THE PLANS AND SPECIAL PROVISIONS REMAIN IN EFFECT.

City of
SACRAMENTO
Parks and Recreation

DOGWOOD PARK DEVELOPMENT
(L19185000)
(Addendum #2)

B14190021005

December 3, 2013

To all Potential Bidders:

Attached hereto are addenda items, which shall be incorporated into the request for proposal for above noted project. These changes shall be considered as part of the original documents, as if they were originally provided therein, and as such shall be used as contractual documents. All other terms, conditions, and specifications of the bid remain unchanged. Bidders must acknowledge receipt of this addendum prior to the hour and date specified in the bid request, or as amended, by one of the following methods:

(a) By acknowledging receipt, on the proposal form submitted; or
(b) By separate letter or telegram which includes a reference to the bid request and addendum number.

Failure to acknowledge receipt of this addendum in one of the above methods and cause acknowledgment to be received at the Clerk's Office, 915 I Street, City Hall, 1st Floor, Sacramento, CA 95814-2671, prior to the hour and date specified for receipt of bids, may result in rejection of your offer. If by virtue of this addendum you decide to change an offer already submitted, such change may be made by telegram or letter, provided such telegram or letter makes reference to the bid request number and this addendum, and is received prior to the opening hour and date specified.

For any contractual questions related to this Addendum, contact Tim Hopper at (916) 808-8173. For technical questions contact the project manager: DENNIS DAY at (916) 808-7633.

Very truly yours,

T Hopper

Tim Hopper
Contracts & Compliance Specialist
Department of General Services

Enclosure

Clerk's Office

c: Distribution List
Planholders

h:\documents\contract mgmt\dogwood park\dogwood park improvements\addendums\addendum 2\addendum #2ltr-parks.docx

City of
SACRAMENTO
Parks and Recreation
915 I Street, 3rd Floor, Sacramento, CA 95814

ADDENDUM NO. 2
(B14190021005)

for

DOGWOOD PARK DEVELOPMENT (L19185000)

Sacramento, California

December 3, 2013

Item #1 – LOCAL BUSINESS ENTERPRISE (LBE) PARTICIPATION REQUIREMENT IS WAIVED.

Item #2- LOCAL BUSINESS ENTERPRISE (LBE) PREFERENCE REQUIREMENT IS WAIVED.

THE ORIGINAL BID DUE DATE OF *December 11, 2013* REMAINS THE SAME.

This addendum is issued in conformance with the original plans and specifications.
Unchanged portions of the plans and special provisions remain in effect.

h:\documents\contract mgmt\dogwood park\dogwood park improvements\addendums\addendum 2\addendum #2.docx

City of
SACRAMENTO
Parks and Recreation

DOGWOOD PARK DEVELOPMENT
(L19185000)
(Addendum #1)

B14190021005

November 25, 2013

To all Potential Bidders:

Attached hereto are addenda items, which shall be incorporated into the request for proposal for above noted project. These changes shall be considered as part of the original documents, as if they were originally provided therein, and as such shall be used as contractual documents. All other terms, conditions, and specifications of the bid remain unchanged. Bidders must acknowledge receipt of this addendum prior to the hour and date specified in the bid request, or as amended, by one of the following methods:

(a) By acknowledging receipt, on the proposal form submitted; or
(b) By separate letter or telegram which includes a reference to the bid request and addendum number.

Failure to acknowledge receipt of this addendum in one of the above methods and cause acknowledgment to be received at the Clerk's Office, 915 I Street, City Hall, 1st Floor, Sacramento, CA 95814-2671, prior to the hour and date specified for receipt of bids, may result in rejection of your offer. If by virtue of this addendum you decide to change an offer already submitted, such change may be made by telegram or letter, provided such telegram or letter makes reference to the bid request number and this addendum, and is received prior to the opening hour and date specified.

For any contractual questions related to this Addendum, contact Tim Hopper at (916) 808-8173. For technical questions contact the project manager: DENNIS DAY at (916) 808-7633.

Very truly yours,

T. Hopper

Tim Hopper
Contracts & Compliance Specialist
Department of General Services

Enclosure

Clerk's Office

c: Distribution List
Planholders

h:\documents\contract mgmt\dogwood park\dogwood park improvements\addendums\addendum 1\addendum #1ltr-parks.docx

City of
SACRAMENTO
Parks and Recreation
915 I Street, 3rd Floor, Sacramento, CA 95814

ADDENDUM NO. 1
(B14190021005)

for

DOGWOOD PARK DEVELOPMENT (L19185000)

Sacramento, California

November 25, 2013

Item 1: EMERGING AND SMALL BUSINESS DEVLOPMENT CHANGE

1. The ESBE Participation Requirement is waived for this project.

THE ORIGINAL BID DUE DATE OF *December 11, 2013* REMAINS THE SAME.

This addendum is issued in conformance with the original plans and specifications.
Unchanged portions of the plans and special provisions remain in effect.

h:\documents\contract mgmt\dogwood park\dogwood park improvements\addendums\addendum 1\addendum #1.docx

CITY OF SACRAMENTO
Department of Parks and Recreation
Park Planning and Development Services

CONTRACTOR NAME: Abide Builders Inc

TO THE HONORABLE CITY COUNCIL
SACRAMENTO, CALIFORNIA:

In compliance with the Contract Documents, the undersigned hereby proposes to furnish all required labor, materials, supervision, transportation, equipment, services, taxes and incidentals required for:

DOGWOOD PARK DEVELOPMENT- L19185000

in the City and County of Sacramento, California.

The Work is to be done in strict conformity with the Contract Documents now on file in the Office of the City Clerk, for the following sum:

Item No.	Item	Estimated Quantity	Unit	Unit Price	Total
1.	Clearing and Grubbing	1	LS	$ 1500	$ 1500
2.	Temporary Construction Fence to Install	1	LS	$ 2500	$ 2500
3.	Erosion and Sediment Control	1	LS	$ 6000	$ 6000
4.	Construction Staking	1	LS	$ 6000	$ 6000
5.	Site Grading	1	LS	$ 16000	$ 16000
6.	Catch Basin to Construct	4	EA	$ 800	$ 3200
7.	Play Area Catch Basin to Construct	1	EA	$ 700	$ 700
8.	6" PVC Drain Pipe to Place	1	LS	$ 6000	$ 6000
9.	8" PVC Drain Pipe to Place	1	LS	$ 4500	$ 4500
10.	Standard Manhole No. 3 to Construct	1	LS	$ 2000	$ 2000
11.	Storm Drain Cleanout to Construct	1	LS	$ 250	$ 250
12.	2" Domestic Water Meter, Backflow Preventer and Enclosure	1	LS	$ 3500	$ 3500

CITY OF SACRAMENTO
Department of Parks and Recreation
Park Planning and Development Services

13.	Domestic Water Line	1	LS	$ 2500	$ 2500
14.	Drinking Fountain to Install	1	LS	$ 5000	$ 5000
15.	Aggregate Base to Place	1	LS	$ 20,000	$ 20,000
16.	Basketball Court Pavement to Place	1	LS	$ 18,000	$ 18,000
17.	4" Concrete Flatwork to Construct	1	LS	$ 22,000	$ 22,000
18.	5" Concrete Flatwork to Construct	1	LS	$ 35,000	$ 35,000
19.	Exposed Aggregate Paving with Glass Beans to Construct	1	LS	$ 12,000	$ 12,000
20.	6" Play Area Curb to Construct	1	LS	$ 8000	$ 8000
21.	9" Concrete Mow Strip to Construct	1	LS	$ 7000	$ 7000
22.	Stabilized Decomposed Granite Pavement to Place	1	LS	$ 2500	$ 2500
23.	Landscape Boulders to Place	1	LS	$ 2700	$ 2700
24.	Basketball Posts and Backboards to Install	1	LS	$ 9000	$ 9000
25.	Horseshoe Court Equipment to Install	1	LS	$ 7000	$ 7000
26.	Play Structure to Install	1	LS	$ 110,000	$ 110,000
27.	Swings and Independent Play Items to Install	1	LS	$ 35,000	$ 35,000
28.	Concrete Play Items to Install	1	LS	$ 55,000	$ 55,000
29.	Tike Track Signs and Equipment	1	LS	$ 1200	$ 1200
30.	Painted Striping and Pavement Markings	1	LS	$ 1200	$ 1200
31.	Rubber Mat Under Swing to Install	1	EA	$ 2000	$ 2000
32.	Play Area Wood Fiber to Place	1	LS	$ 26000	$ 26000

CITY OF SACRAMENTO
Department of Parks and Recreation
Park Planning and Development Services

33.	Poured-in-Place Rubber Surfacing	1	LS	$ 20,000	$ 20,000
34.	Bench with Back to Install	4	EA	$ 2000	$ 8000
35.	Bench without Back to Install	2	EA	$ 4000	$ 8000
36.	Picnic Table to Install	9	EA	$ 2000	$ 18,000
37.	Trash Receptacles to Install	3	EA	$ 2000	$ 6000
38.	Group Grill to Install	1	EA	$ 1500	$ 1500
39.	Park Rule Signs to Install	3	EA	$ 200	$ 600
40.	Concrete Park Sign to Install	1	LS	$ 5000	$ 5000
41.	Electrical System	1	LS	$ 16000	$ 16,000
42.	2" Irrigation Water Meter, Backflow Preventer and Enclosure	1	LS	$ 2500	$ 2500
43.	Automatic Irrigation System	1	LS	$ 92500	$ 92500
44.	Central Irrigation Controller	1	LS	$ 16000	$ 16000
45.	Booster Pump Assembly	1	LS	$ 19,000	$ 19000
46.	Trees to Plant (15 Gal.)	1	LS	$ 4000	$ 4000
47.	Trees to Plant (24" Box)	1	LS	$ 21000	$ 21000
48.	Shrub and Groundcover Areas to Plant	1	LS	$ 28000	$ 28000
49.	Landscape Weed Fabric to Install	1	LS	$ 6500	$ 6500
50.	Bark Mulch to Install	1	LS	$ 16000	$ 16000
51.	Turf Hydroseed to Place	1	LS	$ 33510	$ 33510
52.	Plant Establishment (90 days)	1	LS	$ 9000	$ 9000
				BASE BID SUBTOTAL	$ 764 360

h:\documents\contract mgmt\dogwood park\dogwood park improvements\contract docs_planet bids\12- dogwood-bid proposal.docx

ADDITIVE ALTERNATE BID ITEMS:

A1	Metal Shade Structure to Install	1	LS	$ 49000	$ 49000
A2	Fabric Shade Canopy to Install	1	LS	$ 23000	$ 23000
A3	Turf Sod to Install	1	LS	$ 43000	$ 43000
				ADDITIVE ALTERNATE SUBTOTAL	$ 115,000

TOTAL (BASE BID PLUS ADDITIVE ALTERNATES) $ 879,360

(F) – denotes final pay quantity

CONTRACTOR NAME: Abide Builders Inc TOTAL: $ 879,360

If awarded the Agreement, the undersigned agrees to sign said Agreement and furnish the necessary surety bonds and insurance certificates within ten (10) days after receipt of the notice of award of Agreement, and to begin work within fifteen (15) days after the Notice to Proceed by the City.

It is understood that this Bid Proposal is based upon completion of the Work within a period of **EIGHTY (80) WORKING DAYS, PLUS NINETY (90) CALENDAR DAYS PLANT ESTABLISHMENT**. The Contractor shall refer to Section 1.B Completion Time of the Special Provisions for calculation of the completion date.

The Landscape Architect's order of preference will be as follows: base bid first, followed by additive alternates in numerical order, based on funds available.

In determining the amount bid by each bidder, the City shall disregard mathematical errors in addition, subtraction, multiplication, and division that appear obvious on the face of the Proposal. When such a mathematical error appears on the face of the Proposal, the City shall have the right to correct such error and to compute the total amount bid by said bidder on the basis of the corrected figure or figures.

When an item price is required to be set forth in the Proposal, and the total for the item set forth separately does not agree with a figure which is derived by multiplying the item price times the Engineer's estimate of the quantity of work to be performed for said item, the item price shall prevail over the sum set forth as the total for the item unless, in the sole discretion of the City, such a procedure would be inconsistent with the policy of the bidding procedure. The total paid for each such item of work shall be based upon the item price and not the total price. Should the Proposal contain only total price for the item and the item price is omitted, the City shall determine the item price by dividing the total price for the item by the Engineer's estimate of the estimated quantities of work to be performed as items of work.

If the Proposal contains neither the item price nor the total price for the item, then it shall be deemed incomplete and the Proposal shall be disregarded.

The undersigned has examined the location of the proposed Work, the local conditions at the place where the Work is to be done, is familiar with the Contract Documents and is familiar and expressly agrees to the liquidated damages provision of the Contract Documents. The undersigned has checked carefully all of the foregoing figures and understands that the City of Sacramento will not be responsible for any errors or omissions on the part of the undersigned in making up this Bid Proposal.

Enclosed is Bid Proposal Guarantee, as required, consisting of a bidder's bond or other acceptable security for not less than ten percent (10%) of the amount Bid Proposal.

The undersigned agrees that all addenda received and acknowledged herein shall become a part of and be included in this Bid Proposal. This Bid Proposal includes the following addenda:

Add. #	1	DATE	11/25/13
Add. #	2	DATE	12/3/13
Add. #	3	DATE	12/4/13

NOTE: State whether your concern is a corporation, a co-partnership, private individual, or individuals doing business under a firm name.

If the Bidder is a corporation, the Bid Proposal must be executed in the name of the corporation and must be signed by a duly authorized officer of the corporation.

If the Bidder is a partnership, the Bid Proposal must be executed in the name of the partnership and one of the partners must subscribe their signature thereto as the authorized representative of the partnership.

AMOUNT OF BID PROPOSAL GUARANTEE ENCLOSED:

($_____) not less than ten percent (10%) of amount Bid Proposal

FOR CITY USE ONLY

BID BOND SECURITY
- ☐ *Properly Signed*
- ☐ *Improperly Signed*
- ☐ *Not Included*
- ☐ *Not Required*

TYPE OF DEPOSIT
- ☑ *Bid Bond*
- ☐ *Cashier/Certified Check*
- ☐ *Other* _____

Initial: _____

CONTRACTOR:

By: _____
(Signature)

Jeff Lovitt
(Print or Type)

Title V.P.
Address 4992 Allison PKwy Ste A
Vacaville, CA 95688

ark\dogwood park improvements\contract docs_planet bids\12- dogwood-

CITY OF SACRAMENTO
Department of Parks and Recreation
Park Planning and Development Services

Abide Builders Inc
Telephone No. (707) 447-1778
Fax No. (707) 447-1664
EMAIL ADDRESS jlovitt@abidebuilders.com
Date 12/10/17

PLEASE PRINT CLEARLY AS BID RESULTS WILL BE SENT VIA EMAIL

Contractor's License No. 891745 Type A/B
Expiration Date 2/28/2015
Tax I.D. Nos.- Fed. 20-8176426 State CA
City of Sacramento Business Operation Tax Certificate No. 157420
(City will not award contract if Certificate Number is missing.)

LOCAL BUSINESS ENTERPRISE (LBE) PREFERENCE PROGRAM REQUIREMENTS

(City Contracts, no Federal Funds Used)

I. LBE PREFERENCE PROGRAM

On April 3, 2012, the Sacramento City Council adopted a Local Business Enterprise Preference (LBE) Program to provide enhanced opportunities for the participation of local business enterprises (LBEs) in the City's contracting and procurement activities.

The LBE Program provides for a two percent (2%) preference on all City procurement opportunities under $100,000. For professional service contracts only, this preference also applies to procurement opportunities of $100,000 or more.

A bid or quotation submitted by a firm that is located within Sacramento city and/or the unincorporated county of Sacramento will receive a two percent (2%) bid evaluation preference for the purpose of determining the lowest responsible bidder. If, after applying the 2% bid evaluation preference, the bid of an LBE firm receiving such preference is determined to be the lowest responsible bid, the award will be made for the actual amount bid.

Bidders shall submit proof to the City demonstrating that the businesses in compliance will all applicable laws relating to licensing and is not delinquent on any City of Sacramento or County of Sacramento taxes, permits, or fees.

II. LBE QUALIFICATION

A. A LBE designated in the bid must be qualified as a LBE prior to the time bids are received.

B. Local Business Enterprise means a business enterprise, including but not limited to, a sole proprietorship, partnership, limited liability company, corporation, or any other business entity that has a legitimate business presence in the city or unincorporated county of Sacramento. Evidence of legitimate business presence in the city or unincorporated county of Sacramento shall include:

1. Having a current City of Sacramento Business Operation Tax or County of Sacramento Business License; and
2. Having either of the following types of offices or workspace operating legally within the city or unincorporated county of Sacramento:
    a. The LBE's principle business office or workspace; or
    b. The LBE's regional, branch or satellite office with at least one full time employee located in the city or unincorporated county of Sacramento.

C. A LBE must provide a physical address for the basis of location. This excludes P.O. Box addresses.

D. A LBE must provide a current copy of the City of Sacramento Business Operations Tax Certificate and/or County of Sacramento Business License.

III. APPLICATION OF LBE PREFERENCE

A. When applying the LBE preference to a Bid, the preference shall apply to the Bid price solely for Bid evaluation purposes such that the total price bid by a Local Business shall be reduced by two percent (2%) of the amount bid by that Local Business, and the reduced Bid amount shall be deemed the amount bid by that bidder. The Contract price shall in all events be the amount Bid by the successful bidder awarded the Contract.

B. When applying the LBE preference to a Proposal, the preference shall apply in the form of additional points to the Proposal's final score such that the score awarded to a Proposal submitted by a Local Business is increased by two percent (2%) of the total possible evaluation points.

C. The LBE preference can be applied to Bids and Proposals in addition to the City of Sacramento Emerging and Small Business Development five percent (5%) preference program. Any bid or quotation submitted by a contractor that is certified as a Small Business Enterprise (SBE) or that is certified as an Emerging Business Enterprise (EBE) by the City of Sacramento, receives a five percent (5%) bid evaluation preference for the purpose of determining the lowest responsible bidder.

D. **The LBE preference shall apply to all City procurement opportunities under $100,000 and professional service contracts of $100,000 or more**

IV. DEFINITIONS

A. Local Business Enterprise (LBE): A business enterprise, including but not limited to, a sole proprietorship, partnership, limited liability company, corporation, or any other business entity that has a legitimate business presence in the city or unincorporated county of Sacramento.

B. Emerging Business Enterprise (EBE): The City shall certify EBEs utilizing the small business certification criteria and standards of the State of California, General Services Department, Office of Small Business Certification and Resources, that were in effect on December 1, 1998 provided that the size standard, industry by industry, shall be set at 50% of the State small business certification criteria and standards that were in effect on December 1, 1998.

C. Small Business Enterprise (SBE): The City shall certify SBEs utilizing the small business certification criteria and standards of the State of California, General Services Department, Office of Small Business Certification and Resources. The City will also accept State certified SBEs.

D. Proposal: Any response to a City solicitation for Proposals or Qualifications.

E. Bid: Any response to a City solicitation for bids.

LOCAL BUSINESS ENTERPRISE (LBE) PREFERENCE PROGRAM

NOTE: Proposers must provide responses to the following items. Failure to provide a response to each of the items in this section may be grounds for rejection of the proposal.

1. LBE TWO PERCENT (2%) BID EVALUATION PREFERENCE

On April 3, 2012, the Sacramento City Council adopted a Local Business Enterprise Preference program to provide enhanced opportunities for the participation of local business enterprises (LBEs) in the City's contracting and procurement activities.[1] A bid or quotation submitted by a firm that is located within Sacramento city and/or the unincorporated county of Sacramento will receive a two percent (2%) bid evaluation preference for the purpose of determining the lowest responsible bidder. If, after applying the 2% bid evaluation preference, the bid of an LBE firm receiving such preference is determined to be the lowest responsible bid, the award will be made for the actual amount bid. To receive this bid evaluation preference, a firm must be a qualified as a LBE prior to the time bids are received.

Local Business Enterprise means a business enterprise, including but not limited to, a sole proprietorship, partnership, limited liability company, corporation, or other business entity that has a legitimate business presence in the city or unincorporated county of Sacramento. Evidence of legitimate business presence in the city or unincorporated county of Sacramento shall include:

1. Having a current City of Sacramento Business Operation Tax or County of Sacramento Business License; and
2. Having either of the following types of offices or workspace operating legally within the city or unincorporated county of Sacramento:
    a. The LBE's principle business office or workspace; or
    b. The LBE's regional, branch or satellite office with at least one full time employee located in the city or unincorporated county of Sacramento.

A. LOCAL BUSINESS ENTERPRISE (LBE)

Is the firm submitting the bid qualified as a local business enterprise? Check the appropriate box below:

☐ **YES** - the firm submitting the bid is qualified as a local business enterprise.

☑ **NO** - the firm submitting the bid is not qualified as a local business enterprise.

If the response to the above is YES, provide the City of Sacramento Business Operations Tax Certificate Number and/or County of Sacramento Business License Number:

_____

If the response to the above is YES, provide a current copy of the City of Sacramento Business Operations Tax Certificate and/or County of Sacramento Business License.

If the response to the above is YES, provide business office or workspace address*:

_____

_____

_____

* Address must be a physical address for the basis of location, this excludes P.O. Box addresses.

[1] The LBE Program provides for a two percent (2%) preference on all City procurement opportunities under $100,000. For professional service contracts only, this preference also applies to procurement opportunities of $100,000 or more.

MINIMUM QUALIFICATIONS QUESTIONNAIRE

Sacramento City Code Section 3.60.020 authorizes the Sacramento City Council to adopt standard minimum qualifications for bidders on competitively bid public works construction projects, and requires, among other provisions, that a bidder meet such minimum qualifications at the time of bid opening in order to bid. On July 31, 2007, the City Council adopted Resolution No. 2007-574 establishing these standard minimum qualifications. Pursuant to City Code section 3.60.020, a bidder failing to meet these minimum qualifications at the time of bid opening shall not be considered a responsible bidder for purposes of bidding on the subject project.

All bidders must demonstrate compliance with the minimum qualifications established by Resolution No. 2007-574 by completing all of the questions contained in this questionnaire. Bidder responses shall be limited to those operating business units, offices, branches and/or subsidiary divisions of the bidder that will be involved with the performance of any project work if awarded the contract. If a bidder answers "yes" to any single question, fails to submit a fully completed questionnaire, or submits false information, this will result in a determination that the minimum qualifications are not met, and the bidder shall not be considered a qualified bidder for purposes of bidding on this contract. If two or more entities submit a bid on a contract as a Joint Venture, each entity within the Joint Venture must separately meet these minimum qualifications for the Joint Venture to be considered a qualified bidder.

The City of Sacramento ("City") shall make its determination on the basis of the submitted questionnaire, as well as any relevant information that is obtained from others or as a result of investigation by the City. While it is the intent of this questionnaire to assist the City in determining whether bidders possess the minimum qualifications necessary to submit bids on the City's competitively bid public works construction contracts, the fact that a bidder submits a questionnaire demonstrating that it meets these minimum qualifications shall not in any way limit or affect the City's ability to: (1) review other information contained in the bid submitted by the bidder, and additional relevant information, and determine whether the contractor is a responsive and/or responsible bidder; or (2) establish pre-qualification requirements for a specific contract or contracts.

By submitting this questionnaire, the bidder consents to the disclosure of its questionnaire answers: (i) to third parties for purposes of verification and investigation; (ii) in connection with any protest, challenge or appeal of any action taken by the City; and (iii) as required by any law or regulation, including without limitation the California Public Records Act (Calif. Gov't Code sections 6250 et seq.). Each questionnaire must be signed under penalty of perjury in the manner designated at the end of the form, by an individual who has the legal authority to bind the bidder submitting the questionnaire. If any information provided by a bidder becomes inaccurate, the bidder shall immediately notify the City and provide updated accurate information in writing, under penalty of perjury.

FOR CITY CLERK USE ONLY

RESOLUTION NO.: 2007-574

DATE ADOPTED: July 31, 2007

QUESTIONNAIRE

NOTICE: **For firms that maintain other operating business units, offices, branches and/or subsidiary divisions that will not be involved with the performance of any project work if the firm is awarded the contract, references hereafter to "your firm" shall mean only those operating business units, offices, branches and/or subsidiary divisions that will be involved with the performance of any project work.**

All of the following questions regarding "your firm" refer to the firm (corporation, partnership or sole proprietor) submitting this questionnaire, as well as any firm(s) with which any of your firm's owners, officers, or partners are or have been associated as an owner, officer, partner or similar position within the last five years

The firm submitting this questionnaire shall not be considered a responsible bidder if the answer to any of these questions is "yes", or if the firm submits a questionnaire that is not fully completed or contains false information.

1. **Classification & Expiration Date(s) of California** Contractor's License Number(s) held by firm:

   891745 A, B 02/2015

2. Has a contractor's license held by your firm and/or any owner, officer or partner of your firm been revoked at anytime in the last five years?

   ☐ Yes ☑ No

3. Within the last five years, has a surety firm completed a contract on your firm's behalf, or paid for completion of a contract to which your firm was a party, because your firm was considered to be in default or was terminated for cause by the project owner?

   ☐ Yes ☑ No

4. At the time of submitting this minimum qualifications questionnaire, is your firm ineligible to bid on or be awarded a public works contract, or perform as a subcontractor on a public works contract, pursuant to either California Labor Code section 1777.1 (prevailing wage violations) or Labor Code section 1777.7 (apprenticeship violations)?

   ☐ Yes ☑ No

5. At any time during the last five years, has your firm, or any of its owners, officers or partners been convicted of a crime involving the awarding of a contract for a government construction project, or the bidding or performance of a government contract?

   ☐ Yes ☑ No

FOR CITY CLERK USE ONLY

RESOLUTION NO.: 2007-574

DATE ADOPTED: July 31, 2007

6. Answer either subsection A or B, as applicable:

A. Your firm has completed three or more government construction contracts in Sacramento County within the last five years: Within those five years, has your firm been assessed liquidated damages on three or more government construction contracts in Sacramento County for failure to complete contract work on time?

NOTE: If there is a pending administrative or court action challenging the assessment of liquidated damages on a government contract within the last five years, you need not include that contract in responding to this question.

☐ Yes ☑ No ☐ Not applicable

OR

B. Your firm has not completed at least three government construction contracts in Sacramento County within the last five years: Within the last three years, has your firm been assessed liquidated damages on three or more government construction contracts for failure to complete contract work on time?

NOTE: If there is a pending administrative or court action challenging an assessment of liquidated damages on a government contract within the last three years, you need not include that contract in responding to this question.

☐ Yes ☐ No ☐ Not applicable

7. In the last three years has your firm been debarred from bidding on, or completing, any government agency or public works construction contract for any reason?

NOTE: If there is a pending administrative or court action challenging a debarment, you need not include that debarment in responding to this question.

☐ Yes ☑ No

8. Has CAL OSHA assessed a total of three or more penalties against your firm for any "serious" or "willful" violation occurring on construction projects performed in Sacramento County at any time within the last three years?

NOTE: If there is a pending administrative or court action appealing a penalty assessment, you need not include that penalty assessment in responding to this question.

☐ Yes ☑ No

FOR CITY CLERK USE ONLY

RESOLUTION NO.: 2007-574

DATE ADOPTED: July 31, 2007

9. Answer either subsection A or B, as preferred:

A. In the last three years has your firm had a three year average Workers' Compensation experience modification rate exceeding 1.1?

☐ Yes ☐ No

OR

B. In the last three years has your firm had a three-year average incident rate for total lost workday cases exceeding 10?

NOTE: Incident rates represent the number of lost workday cases per 100 full-time workers and is to be calculated as: (N/EH) x 200,000, where

N	=	**number of lost workday cases (as defined by the U.S. Dept. of Labor, Bureau of Labor Statistics)**
EH	=	**total hours worked by all employees during the calendar year**
200,000	=	**base for 100 equivalent full-time working (working 40 hours per week, 50 weeks per year)**

☐ Yes ☒ No

10. In the past three years, has the federal EPA, Region IX or a California Air Quality Management District or Regional Water Quality Control Board assessed penalties three or more times, either against your firm, or against the project owner for a violation resulting in whole or in part from any action or omission by your firm on a project on which your firm was a contractor in Sacramento County?

NOTE: If there is a pending administrative or court action appealing a penalty assessment, you need not include that penalty assessment in responding to this question.

☐ Yes ☒ No

FOR CITY CLERK USE ONLY

RESOLUTION NO.: 2007-574

DATE ADOPTED: July 31, 2007

11. In the past three years, has the federal EPA, Region IX or a California Air Quality Management District or Regional Water Quality Control Board assessed a single penalty of $100,000 or more, either against your firm, or against the project owner for a violation resulting in whole or in part from any action or omission by your firm on a project on which your firm was the contractor in Sacramento County?

NOTE: **If there is a pending administrative or court action appealing a penalty assessment, you need not include that penalty assessment in responding to this question.**

☐ Yes ☑ No

12. In the past three years, have civil penalties been assessed against your firm pursuant to California Labor Code 1777.7 for violation of California public works apprenticeship requirements, three or more times?

NOTE: **If there is a pending administrative or court action appealing a penalty assessment, you need not include that penalty assessment in responding to this question.**

☐ Yes ☑ No

13. In the past three years, has a public agency in California withheld contract payments or assessed penalties against your firm for violation of public works prevailing wage requirements, three or more times?

NOTE: **If there is a pending administrative or court action appealing a withholding or penalty assessment, you need not include that withholding or penalty assessment in responding to this question.**

☐ Yes ☑ No

14. Has your firm been assessed penalties for violation of public works prevailing wage requirements in California, in an aggregate amount for the past three years of $50,000 or more?

NOTE: **If there is a pending administrative or court action appealing a penalty assessment, you need not include that penalty assessment in responding to this question.**

☐ Yes ☑ No

FOR CITY CLERK USE ONLY

RESOLUTION NO.: 2007-574

DATE ADOPTED: July 31, 2007

VERIFICATION AND SIGNATURE

I, the undersigned, certify and declare that I have read all the foregoing answers to this Minimum Qualifications Questionnaire, and know their contents. The matters stated in these Questionnaire answers are true of my own knowledge and belief, except as to those matters stated on information and belief, and as to those matters I believe them to be true. I declare under penalty of perjury under the laws of the State of California that the foregoing is true and correct.

Signed at VACAVILLE, CA (Location), on 12/10/13 (Date).

Signature: [signature]

Print name: JEFF LOVITT

Title: V.P.

NOTE: If two or more entities submit a bid on a contract as a Joint Venture, each entity within the Joint Venture must submit a separate Minimum Qualifications Questionnaire.

FOR CITY CLERK USE ONLY

RESOLUTION NO.: 2007-574

DATE ADOPTED: July 31, 2007

CITY OF SACRAMENTO
Department of Parks & Recreation
Park Planning, Design & Development

DRUG-FREE WORKPLACE POLICY AND AFFIDAVIT

BID PROPOSAL MAY BE DECLARED NONRESPONSIVE IF THIS FORM (COMPLETED) IS NOT ATTACHED.
Pursuant to City Council Resolution CC90-498 dated 6/26/90 the following is required.

The undersigned contractor certifies that it and all subcontractors performing under this Agreement will provide a drug-free workplace by:

1. Publishing a "Drug-Free Workplace" statement notifying employees that the unlawful manufacture, distribution, dispensing, possession or use of a controlled substance is prohibited in the contractor's workplace and specifying the actions that will be taken against employees for violations of such prohibition.

2. Establishing a Drug-Free Awareness Program to inform employees about:

   a. The dangers of drug abuse in the workplace.
   b. The contractor's policy of maintaining a drug-free workplace.
   c. Any available drug counseling, rehabilitation, and employee assistance program.
   d. The penalties that may be imposed upon employees for drug abuse violations occurring in the workplace.

3. Notify employees that as a condition of employment under this Agreement, employees will be expected to:

   a. Abide by the terms of the statement.
   b. Notify the employer of any criminal drug statute conviction for a violation occurring in the workplace.

4. Making it a requirement that each employee to be engaged in the performance of the Agreement be given a copy on the "Drug-Free Workplace" statement.

5. Taking one of the following appropriate actions, within thirty (30) days of receiving notice from an employee or otherwise receiving such notice, that said employee has received a drug conviction for a violation occurring in the workplace:

   a. Taking appropriate disciplinary action against such an employee, up to and including termination; or
   b. Requiring such employee to participate satisfactorily in a drug abuse assistance or rehabilitation program approved for such purposes by a federal, state, or local health, law enforcement or other appropriate agency.

* I certify that no person employed by this company, corporation, or business has been convicted of any criminal drug statute violation on any job site or project where this company, corporation or business was performing was within three years of the date of my signature below.

EXCEPTION: _____ _____ _____
Date **Violation Type** **Place of Occurrence**

If additional space is required use back of this form.

*** The above statement will also be incorporated as a part of each subcontract agreement for any and all subcontractors selected for performance on this project.**

IN THE EVENT THIS COMPANY, CORPORATION, OR BUSINESS IS AWARDED THIS CONSTRUCTION AGREEMENT, AS A RESULT OF THIS BID; THE CONTRACTOR WITH HIS/HER SIGNATURE REPRESENTS TO THE CITY THAT THE INFORMATION DISCLOSED IN THIS DOCUMENT IS COMPLETE AND ACCURATE. IT IS UNDERSTOOD AND AGREED THAT FALSE CERTIFICATION IS SUBJECT TO IMMEDIATE TERMINATION BY THE CITY.

The Representations Made Herein On This Document Are Made Under Penalty Of Perjury.

CONTRACTOR'S NAME: Abide Builders Inc

BY: [signature] V.P. **Date:** 12-11-13
Signature **Title**

Effects of violations: **a.** Suspension of payments under the Agreement. **b.** Suspension or termination of the Agreement. **c.** Suspension or debarment of the contractor from receiving any Agreement from the City of Sacramento for a period not to exceed five years.

CITY OF SACRAMENTO

THIS FORM MUST BE SUBMITTED WITH THE SEALED BID PROPOSAL

ONLY THE BASE BID NUMBERS ARE TO BE USED IN THE ESTIMATED DOLLAR VALUE

CITY OF SACRAMENTO SUBCONTRACTOR and ESBE PARTICIPATION VERIFICATION

To be eligible for award of this contract, the bidder shall list any business entity used to attain the ESBE goal. Additionally, all other subcontractors who perform work, labor, or render service in an amount in excess of one-half of 1 percent of the total bid amount shall be listed. In the case of bids for the construction of streets and highways, including bridges, subcontractors whose subcontract value exceeds one-half (0.5) of one percent of the total bid or ten thousand dollars ($10,000), whichever is greater, shall be listed. Estimated dollar values shall be provided for all work / services listed. The inclusion of false information or the omission of required information will render the bid non-responsive. **READ THE ABOVE REQUIREMENT CAREFULLY**

Name of Prime Contractor: ABIDE BUILDERS	SBE	**BASE BID Amount:** ~~879360~~ 764360 ZK	Date: 12-11-13
Business Entity or Subcontractor Name and Location	Indicate EBE or SBE (subject to verification)	Items of Work and/or Description of Work or Service Subcontracted or Materials to be provided to complete contract	Estimated Dollar Value of Work / Services Provided **FOR BASE BID**
Surveyor's Group Roseville		Staking	3000
Sierra Asphalt Rancho Cordova		Paving	12000
Aerco Pacific Rancho Cordova		Irrigation & landscape	250,000
Community playground Vallejo		Install play equipment	35000
Ross Recreation folsom		Rubber Surface	22000
ZK ~~Studebaker & Brown Roseville~~		~~Electrical~~	~~18,000~~
Sabastian Forest hill		Electrical	15,000

FM 440 (Rev. 2/25/04)

COPY AND ATTACH ADDITIONAL SHEETS AS NECESSARY

Page 1 of 2

EBE AND SBE CERTIFICATION STATEMENTS ARE DUE BY THE CLOSE OF BUSINESS TWO DAYS AFTER BID OPENING TO: TIM HOPPER, CONTRACTS OFFICER, FOR BID TO BE RESPONSIVE

LOCAL BUSINESS ENTERPRISE (LBE) PREFERENCE PROGRAM REQUIREMENTS

(City Contracts, no Federal Funds Used)

I. LBE PREFERENCE PROGRAM

On April 3, 2012, the Sacramento City Council adopted a Local Business Enterprise Preference (LBE) Program to provide enhanced opportunities for the participation of local business enterprises (LBEs) in the City's contracting and procurement activities.

The LBE Program provides for a two percent (2%) preference on all City procurement opportunities under $100,000. For professional service contracts only, this preference also applies to procurement opportunities of $100,000 or more.

A bid or quotation submitted by a firm that is located within Sacramento city and/or the unincorporated county of Sacramento will receive a two percent (2%) bid evaluation preference for the purpose of determining the lowest responsible bidder. If, after applying the 2% bid evaluation preference, the bid of an LBE firm receiving such preference is determined to be the lowest responsible bid, the award will be made for the actual amount bid.

Bidders shall submit proof to the City demonstrating that the businesses in compliance will all applicable laws relating to licensing and is not delinquent on any City of Sacramento or County of Sacramento taxes, permits, or fees.

II. LBE QUALIFICATION

A. A LBE designated in the bid must be qualified as a LBE prior to the time bids are received.

B. Local Business Enterprise means a business enterprise, including but not limited to, a sole proprietorship, partnership, limited liability company, corporation, or any other business entity that has a legitimate business presence in the city or unincorporated county of Sacramento. Evidence of legitimate business presence in the city or unincorporated county of Sacramento shall include:

1. Having a current City of Sacramento Business Operation Tax or County of Sacramento Business License; and
2. Having either of the following types of offices or workspace operating legally within the city or unincorporated county of Sacramento:
    a. The LBE's principle business office or workspace; or
    b. The LBE's regional, branch or satellite office with at least one full time employee located in the city or unincorporated county of Sacramento.

C. A LBE must provide a physical address for the basis of location. This excludes P.O. Box addresses.

D. A LBE must provide a current copy of the City of Sacramento Business Operations Tax Certificate and/or County of Sacramento Business License.

III. APPLICATION OF LBE PREFERENCE

A. When applying the LBE preference to a Bid, the preference shall apply to the Bid price solely for Bid evaluation purposes such that the total price bid by a Local Business shall be reduced by two percent (2%) of the amount bid by that Local Business, and the reduced Bid amount shall be deemed the amount bid by that bidder. The Contract price shall in all events be the amount Bid by the successful bidder awarded the Contract.

B. When applying the LBE preference to a Proposal, the preference shall apply in the form of additional points to the Proposal's final score such that the score awarded to a Proposal submitted by a Local Business is increased by two percent (2%) of the total possible evaluation points.

C. The LBE preference can be applied to Bids and Proposals in addition to the City of Sacramento Emerging and Small Business Development five percent (5%) preference program. Any bid or quotation submitted by a contractor that is certified as a Small Business Enterprise (SBE) or that is certified as an Emerging Business Enterprise (EBE) by the City of Sacramento, receives a five percent (5%) bid evaluation preference for the purpose of determining the lowest responsible bidder.

D. **The LBE preference shall apply to all City procurement opportunities under $100,000 and professional service contracts of $100,000 or more**

IV. DEFINITIONS

A. Local Business Enterprise (LBE): A business enterprise, including but not limited to, a sole proprietorship, partnership, limited liability company, corporation, or any other business entity that has a legitimate business presence in the city or unincorporated county of Sacramento.

B. Emerging Business Enterprise (EBE): The City shall certify EBEs utilizing the small business certification criteria and standards of the State of California, General Services Department, Office of Small Business Certification and Resources, that were in effect on December 1, 1998 provided that the size standard, industry by industry, shall be set at 50% of the State small business certification criteria and standards that were in effect on December 1, 1998.

C. Small Business Enterprise (SBE): The City shall certify SBEs utilizing the small business certification criteria and standards of the State of California, General Services Department, Office of Small Business Certification and Resources. The City will also accept State certified SBEs.

D. Proposal: Any response to a City solicitation for Proposals or Qualifications.

E. Bid: Any response to a City solicitation for bids.

LOCAL BUSINESS ENTERPRISE (LBE) PREFERENCE PROGRAM

NOTE: Proposers must provide responses to the following items. Failure to provide a response to each of the items in this section may be grounds for rejection of the proposal.

1. LBE TWO PERCENT (2%) BID EVALUATION PREFERENCE

On April 3, 2012, the Sacramento City Council adopted a Local Business Enterprise Preference program to provide enhanced opportunities for the participation of local business enterprises (LBEs) in the City's contracting and procurement activities.[1] A bid or quotation submitted by a firm that is located within Sacramento city and/or the unincorporated county of Sacramento will receive a two percent (2%) bid evaluation preference for the purpose of determining the lowest responsible bidder. If, after applying the 2% bid evaluation preference, the bid of an LBE firm receiving such preference is determined to be the lowest responsible bid, the award will be made for the actual amount bid. To receive this bid evaluation preference, a firm must be a qualified as a LBE prior to the time bids are received.

Local Business Enterprise means a business enterprise, including but not limited to, a sole proprietorship, partnership, limited liability company, corporation, or other business entity that has a legitimate business presence in the city or unincorporated county of Sacramento. Evidence of legitimate business presence in the city or unincorporated county of Sacramento shall include:

1. Having a current City of Sacramento Business Operation Tax or County of Sacramento Business License; and
2. Having either of the following types of offices or workspace operating legally within the city or unincorporated county of Sacramento:
   a. The LBE's principle business office or workspace; or
   b. The LBE's regional, branch or satellite office with at least one full time employee located in the city or unincorporated county of Sacramento.

A. LOCAL BUSINESS ENTERPRISE (LBE)

Is the firm submitting the bid qualified as a local business enterprise? Check the appropriate box below:

☐ **YES** - the firm submitting the bid is qualified as a local business enterprise.

☑ **NO** - the firm submitting the bid is not qualified as a local business enterprise.

If the response to the above is YES, provide the City of Sacramento Business Operations Tax Certificate Number and/or County of Sacramento Business License Number:

_____

If the response to the above is YES, provide a current copy of the City of Sacramento Business Operations Tax Certificate and/or County of Sacramento Business License.

If the response to the above is YES, provide business office or workspace address*:

_____

_____

_____

* Address must be a physical address for the basis of location, this excludes P.O. Box addresses.

[1] The LBE Program provides for a two percent (2%) preference on all City procurement opportunities under $100,000. For professional service contracts only, this preference also applies to procurement opportunities of $100,000 or more.

MINIMUM QUALIFICATIONS QUESTIONNAIRE

Sacramento City Code Section 3.60.020 authorizes the Sacramento City Council to adopt standard minimum qualifications for bidders on competitively bid public works construction projects, and requires, among other provisions, that a bidder meet such minimum qualifications at the time of bid opening in order to bid. On July 31, 2007, the City Council adopted Resolution No. 2007-574 establishing these standard minimum qualifications. Pursuant to City Code section 3.60.020, a bidder failing to meet these minimum qualifications at the time of bid opening shall not be considered a responsible bidder for purposes of bidding on the subject project.

All bidders must demonstrate compliance with the minimum qualifications established by Resolution No. 2007-574 by completing all of the questions contained in this questionnaire. Bidder responses shall be limited to those operating business units, offices, branches and/or subsidiary divisions of the bidder that will be involved with the performance of any project work if awarded the contract. If a bidder answers "yes" to any single question, fails to submit a fully completed questionnaire, or submits false information, this will result in a determination that the minimum qualifications are not met, and the bidder shall not be considered a qualified bidder for purposes of bidding on this contract. If two or more entities submit a bid on a contract as a Joint Venture, each entity within the Joint Venture must separately meet these minimum qualifications for the Joint Venture to be considered a qualified bidder.

The City of Sacramento ("City") shall make its determination on the basis of the submitted questionnaire, as well as any relevant information that is obtained from others or as a result of investigation by the City. While it is the intent of this questionnaire to assist the City in determining whether bidders possess the minimum qualifications necessary to submit bids on the City's competitively bid public works construction contracts, the fact that a bidder submits a questionnaire demonstrating that it meets these minimum qualifications shall not in any way limit or affect the City's ability to: (1) review other information contained in the bid submitted by the bidder, and additional relevant information, and determine whether the contractor is a responsive and/or responsible bidder; or (2) establish pre-qualification requirements for a specific contract or contracts.

By submitting this questionnaire, the bidder consents to the disclosure of its questionnaire answers: (i) to third parties for purposes of verification and investigation; (ii) in connection with any protest, challenge or appeal of any action taken by the City; and (iii) as required by any law or regulation, including without limitation the California Public Records Act (Calif. Gov't Code sections 6250 et seq.). Each questionnaire must be signed under penalty of perjury in the manner designated at the end of the form, by an individual who has the legal authority to bind the bidder submitting the questionnaire. If any information provided by a bidder becomes inaccurate, the bidder shall immediately notify the City and provide updated accurate information in writing, under penalty of perjury.

FOR CITY CLERK USE ONLY

RESOLUTION NO.: 2007-574

DATE ADOPTED: July 31, 2007

QUESTIONNAIRE

NOTICE: **For firms that maintain other operating business units, offices, branches and/or subsidiary divisions that will not be involved with the performance of any project work if the firm is awarded the contract, references hereafter to "your firm" shall mean only those operating business units, offices, branches and/or subsidiary divisions that will be involved with the performance of any project work.**

All of the following questions regarding "your firm" refer to the firm (corporation, partnership or sole proprietor) submitting this questionnaire, as well as any firm(s) with which any of your firm's owners, officers, or partners are or have been associated as an owner, officer, partner or similar position within the last five years

The firm submitting this questionnaire shall not be considered a responsible bidder if the answer to any of these questions is "yes", or if the firm submits a questionnaire that is not fully completed or contains false information.

1. **Classification & Expiration Date(s) of California** Contractor's License Number(s) held by firm:

   891745 A, B 02/2015

2. Has a contractor's license held by your firm and/or any owner, officer or partner of your firm been revoked at anytime in the last five years?

   ☐ Yes ☑ No

3. Within the last five years, has a surety firm completed a contract on your firm's behalf, or paid for completion of a contract to which your firm was a party, because your firm was considered to be in default or was terminated for cause by the project owner?

   ☐ Yes ☑ No

4. At the time of submitting this minimum qualifications questionnaire, is your firm ineligible to bid on or be awarded a public works contract, or perform as a subcontractor on a public works contract, pursuant to either California Labor Code section 1777.1 (prevailing wage violations) or Labor Code section 1777.7 (apprenticeship violations)?

   ☐ Yes ☑ No

5. At any time during the last five years, has your firm, or any of its owners, officers or partners been convicted of a crime involving the awarding of a contract for a government construction project, or the bidding or performance of a government contract?

   ☐ Yes ☑ No

FOR CITY CLERK USE ONLY

RESOLUTION NO.: 2007-574

DATE ADOPTED: July 31, 2007

6. Answer either subsection A or B, as applicable:

A. Your firm has completed three or more government construction contracts in Sacramento County within the last five years: Within those five years, has your firm been assessed liquidated damages on three or more government construction contracts in Sacramento County for failure to complete contract work on time?

NOTE: If there is a pending administrative or court action challenging the assessment of liquidated damages on a government contract within the last five years, you need not include that contract in responding to this question.

☐ Yes ☒ No ☐ Not applicable

OR

B. Your firm has not completed at least three government construction contracts in Sacramento County within the last five years: Within the last three years, has your firm been assessed liquidated damages on three or more government construction contracts for failure to complete contract work on time?

NOTE: If there is a pending administrative or court action challenging an assessment of liquidated damages on a government contract within the last three years, you need not include that contract in responding to this question.

☐ Yes ☐ No ☐ Not applicable

7. In the last three years has your firm been debarred from bidding on, or completing, any government agency or public works construction contract for any reason?

NOTE: If there is a pending administrative or court action challenging a debarment, you need not include that debarment in responding to this question.

☐ Yes ☒ No

8. Has CAL OSHA assessed a total of three or more penalties against your firm for any "serious" or "willful" violation occurring on construction projects performed in Sacramento County at any time within the last three years?

NOTE: If there is a pending administrative or court action appealing a penalty assessment, you need not include that penalty assessment in responding to this question.

☐ Yes ☒ No

FOR CITY CLERK USE ONLY

RESOLUTION NO.: 2007-574

DATE ADOPTED: July 31, 2007

9. Answer either subsection A or B, as preferred:

A. In the last three years has your firm had a three year average Workers' Compensation experience modification rate exceeding 1.1?

☐ Yes ☐ No

OR

B. In the last three years has your firm had a three-year average incident rate for total lost workday cases exceeding 10?

NOTE: Incident rates represent the number of lost workday cases per 100 full-time workers and is to be calculated as: (N/EH) x 200,000, where

N	=	**number of lost workday cases (as defined by the U.S. Dept. of Labor, Bureau of Labor Statistics)**
EH	=	**total hours worked by all employees during the calendar year**
200,000	=	**base for 100 equivalent full-time working (working 40 hours per week, 50 weeks per year)**

☐ Yes ☒ No

10. In the past three years, has the federal EPA, Region IX or a California Air Quality Management District or Regional Water Quality Control Board assessed penalties three or more times, either against your firm, or against the project owner for a violation resulting in whole or in part from any action or omission by your firm on a project on which your firm was a contractor in Sacramento County?

NOTE: If there is a pending administrative or court action appealing a penalty assessment, you need not include that penalty assessment in responding to this question.

☐ Yes ☒ No

FOR CITY CLERK USE ONLY

RESOLUTION NO.: 2007-574

DATE ADOPTED: July 31, 2007

11. In the past three years, has the federal EPA, Region IX or a California Air Quality Management District or Regional Water Quality Control Board assessed a single penalty of $100,000 or more, either against your firm, or against the project owner for a violation resulting in whole or in part from any action or omission by your firm on a project on which your firm was the contractor in Sacramento County?

NOTE: **If there is a pending administrative or court action appealing a penalty assessment, you need not include that penalty assessment in responding to this question.**

☐ Yes ☑ No

12. In the past three years, have civil penalties been assessed against your firm pursuant to California Labor Code 1777.7 for violation of California public works apprenticeship requirements, three or more times?

NOTE: **If there is a pending administrative or court action appealing a penalty assessment, you need not include that penalty assessment in responding to this question.**

☐ Yes ☑ No

13. In the past three years, has a public agency in California withheld contract payments or assessed penalties against your firm for violation of public works prevailing wage requirements, three or more times?

NOTE: **If there is a pending administrative or court action appealing a withholding or penalty assessment, you need not include that withholding or penalty assessment in responding to this question.**

☐ Yes ☑ No

14. Has your firm been assessed penalties for violation of public works prevailing wage requirements in California, in an aggregate amount for the past three years of $50,000 or more?

NOTE: **If there is a pending administrative or court action appealing a penalty assessment, you need not include that penalty assessment in responding to this question.**

☐ Yes ☑ No

FOR CITY CLERK USE ONLY

RESOLUTION NO.: 2007-574

DATE ADOPTED: July 31, 2007

VERIFICATION AND SIGNATURE

I, the undersigned, certify and declare that I have read all the foregoing answers to this Minimum Qualifications Questionnaire, and know their contents. The matters stated in these Questionnaire answers are true of my own knowledge and belief, except as to those matters stated on information and belief, and as to those matters I believe them to be true. I declare under penalty of perjury under the laws of the State of California that the foregoing is true and correct.

Signed at VACAVILLE, CA (Location), on 12/10/13 (Date).

Signature: [signature]

Print name: JEFF LOVITT

Title: V.P.

NOTE: If two or more entities submit a bid on a contract as a Joint Venture, each entity within the Joint Venture must submit a separate Minimum Qualifications Questionnaire.

FOR CITY CLERK USE ONLY

RESOLUTION NO.: 2007-574

DATE ADOPTED: July 31, 2007

Green Contracting Survey
(Voluntary)

The City of Sacramento and the Sacramento Metropolitan Air Quality District (SMAQMD) are conducting a joint pilot project to help meet Federal Clean Air Standards for the Sacramento region.

Attached is a Green Contracting Fleet Inventory Form. Please complete the form, remove it from the bid package and return it to SMAQMD in the postage paid envelope provided with the bid package. Please do not return the Green Contracting Fleet Inventory Form to the City of Sacramento with the bid documents or otherwise.

A limited amount of funds and other financial incentives may be available to qualified contractors participating in this joint project to assist qualified contractors with upgrading and/or replacing equipment and/or trucks.

Completing and returning the Green Contracting Fleet Inventory Form is strictly voluntary.

Voluntary Green Contracting Fleet Inventory List (On-Road Equipment)

In Partnership with the City of Sacramento and the Sacramento Metropolitan Air Quality Management District

Company Name:	
Contact Name:	
Company Address:	
City, State, ZIP:	
Company Phone:	

City Bid Information	
Department	
Project #	
ESBE/SBE?	

Instructions:

a) Please enter the vehicle / equipment information for each unit used in conjunction with your City of Sacramento Bid.
b) All fields are required for both on-road heavy-duty vehicles and off-road construction equipment over 50 HP.
c) Electronic version available at http://www.airquality.org/ceqa/index.shtml
d) For additional questions, please call (916) 874-4892

Please Submit To:

Kristian Damkier, P.E.
Sacramento Metropolitan AQMD
777 12th St, 3rd Floor
Sacramento, CA 95814-1908

#	VIN	License Plate	Vehicle Information			Engine Information				Annual Usage (miles)	Received Funding
			Make	Model	Year	Make	Model	Year	HP		
(ex)	*1XP5AAC35RG339402*	*1T45678*	*Kenworth*	*T-300*	*2002*	*Cummins*	*ISB*	*2002*	*250*	*35,000*	*No*

Voluntary Green Contracting Fleet Inventory List (Off-Road Equipment)

In Partnership with the City of Sacramento and the Sacramento Metropolitan AQMD

Company Name:	
Contact Name:	
Company Address:	
City, State, ZIP:	
Company Phone:	

City Bid Information	
Department	
Project #	
ESBE/SBE?	

Instructions:

a) Please enter the vehicle / equipment information for each unit used in conjunction with your City of Sacramento Bid.
b) All fields are required for both on-road heavy-duty vehicles and off-road construction equipment over 50 HP.
c) Electronic version is available at http://www.airquality.org/ceqa/index.shtml
d) For additional questions, please call (916) 874-4892

Please Submit To:

Kristian Damkier, P.E.
Sacramento Metropolitan AQMD
777 12th St, 3rd Floor
Sacramento, CA 95814-1908

#	Equipment Serial Number	Equipment Information				Engine Information				Annual Usage (hours)
		Make	Model	Type	Year	Make	Model	Year	HP	
(ex)	*48W34456*	*Caterpillar*	*631G*	*Scraper*	*2003*	*Caterpillar*	*3408E*	*2003*	*485*	*1,600*

CITY OF SACRAMENTO
Department of Parks & Recreation
Park Planning, Design & Development

DRUG-FREE WORKPLACE POLICY AND AFFIDAVIT

BID PROPOSAL MAY BE DECLARED NONRESPONSIVE IF THIS FORM (COMPLETED) IS NOT ATTACHED.
Pursuant to City Council Resolution CC90-498 dated 6/26/90 the following is required.

The undersigned contractor certifies that it and all subcontractors performing under this Agreement will provide a drug-free workplace by:

1. Publishing a "Drug-Free Workplace" statement notifying employees that the unlawful manufacture, distribution, dispensing, possession or use of a controlled substance is prohibited in the contractor's workplace and specifying the actions that will be taken against employees for violations of such prohibition.

2. Establishing a Drug-Free Awareness Program to inform employees about:

   a. The dangers of drug abuse in the workplace.
   b. The contractor's policy of maintaining a drug-free workplace.
   c. Any available drug counseling, rehabilitation, and employee assistance program.
   d. The penalties that may be imposed upon employees for drug abuse violations occurring in the workplace.

3. Notify employees that as a condition of employment under this Agreement, employees will be expected to:

   a. Abide by the terms of the statement.
   b. Notify the employer of any criminal drug statute conviction for a violation occurring in the workplace.

4. Making it a requirement that each employee to be engaged in the performance of the Agreement be given a copy on the "Drug-Free Workplace" statement.

5. Taking one of the following appropriate actions, within thirty (30) days of receiving notice from an employee or otherwise receiving such notice, that said employee has received a drug conviction for a violation occurring in the workplace:

   a. Taking appropriate disciplinary action against such an employee, up to and including termination; or
   b. Requiring such employee to participate satisfactorily in a drug abuse assistance or rehabilitation program approved for such purposes by a federal, state, or local health, law enforcement or other appropriate agency.

* I certify that no person employed by this company, corporation, or business has been convicted of any criminal drug statute violation on any job site or project where this company, corporation or business was performing was within three years of the date of my signature below.

EXCEPTION: _____ _____ _____
Date **Violation Type** **Place of Occurrence**

If additional space is required use back of this form.

*** The above statement will also be incorporated as a part of each subcontract agreement for any and all subcontractors selected for performance on this project.**

IN THE EVENT THIS COMPANY, CORPORATION, OR BUSINESS IS AWARDED THIS CONSTRUCTION AGREEMENT, AS A RESULT OF THIS BID; THE CONTRACTOR WITH HIS/HER SIGNATURE REPRESENTS TO THE CITY THAT THE INFORMATION DISCLOSED IN THIS DOCUMENT IS COMPLETE AND ACCURATE. IT IS UNDERSTOOD AND AGREED THAT FALSE CERTIFICATION IS SUBJECT TO IMMEDIATE TERMINATION BY THE CITY.

The Representations Made Herein On This Document Are Made Under Penalty Of Perjury.

CONTRACTOR'S NAME: Abide Builders Inc

BY: _____ V.P. **Date:** 12-10-13
Signature **Title**

Effects of violations: **a.** Suspension of payments under the Agreement. **b.** Suspension or termination of the Agreement. **c.** Suspension or debarment of the contractor from receiving any Agreement from the City of Sacramento for a period not to exceed five years.

CITY OF SACRAMENTO

THIS FORM MUST BE SUBMITTED WITH THE SEALED BID PROPOSAL

ONLY THE BASE BID NUMBERS ARE TO BE USED IN THE ESTIMATED DOLLAR VALUE

CITY OF SACRAMENTO SUBCONTRACTOR and ESBE PARTICIPATION VERIFICATION

To be eligible for award of this contract, the bidder shall list any business entity used to attain the ESBE goal. Additionally, all other subcontractors who perform work, labor, or render service in an amount in excess of one-half of 1 percent of the total bid amount shall be listed. In the case of bids for the construction of streets and highways, including bridges, subcontractors whose subcontract value exceeds one-half (0.5) of one percent of the total bid or ten thousand dollars ($10,000), whichever is greater, shall be listed. Estimated dollar values shall be provided for all work / services listed. The inclusion of false information or the omission of required information will render the bid non-responsive. **READ THE ABOVE REQUIREMENT CAREFULLY**

Name of Prime Contractor: ABIDE BUILDERS	SBE	BASE BID Amount: ~~879360~~ 764360 ZK	Date: 12-11-13
Business Entity or Subcontractor Name and Location	Indicate EBE or SBE (subject to verification)	Items of Work and/or Description of Work or Service Subcontracted or Materials to be provided to complete contract	Estimated Dollar Value of Work / Services Provided **FOR BASE BID**
Surveyor's Group Roseville		Staking	3000
Sierra Asphalt Rancho Cordova		Paving	12000
Aerco Pacific Rancho Cordova		Irrigation & landscape	250,000
Community playground Vallejo		Install play equipment	35000
Ross Recreation folsom		Rubber Surface	22000
ZK ~~Studebaker & Brown Roseville~~		~~Electrical~~	~~18,000~~
Sabastian Forest hill		Electrical	15,000

FM 440 (Rev. 2/25/04)

COPY AND ATTACH ADDITIONAL SHEETS AS NECESSARY

Page 1 of 2

EBE AND SBE CERTIFICATION STATEMENTS ARE DUE BY THE CLOSE OF BUSINESS TWO DAYS AFTER BID OPENING TO: TIM HOPPER, CONTRACTS OFFICER, FOR BID TO BE RESPONSIVE

CITY OF SACRAMENTO

THIS FORM MUST BE SUBMITTED WITH THE SEALED BID PROPOSAL

ONLY THE BASE BID NUMBERS ARE TO BE USED IN THE ESTIMATED DOLLAR VALUE

CITY OF SACRAMENTO SUBCONTRACTOR and ESBE PARTICIPATION VERIFICATION

To be eligible for award of this contract, the bidder shall list any business entity used to attain the ESBE goal. Additionally, all other subcontractors who perform work, labor, or render service in an amount in excess of one-half of 1 percent of the total bid amount shall be listed. In the case of bids for the construction of streets and highways, including bridges, subcontractors whose subcontract value exceeds one-half (0.5) of one percent of the total bid or ten thousand dollars ($10,000), whichever is greater, shall be listed. Estimated dollar values shall be provided for all work / services listed. The inclusion of false information or the omission of required information will render the bid non-responsive. **READ THE ABOVE REQUIREMENT CAREFULLY**

Name of Prime Contractor: ABIDE BUILDERS	SBE	**BASE BID Amount:** 767,360 ~~871,360~~	Date: 12-11-13
Business Entity or Subcontractor Name and Location	Indicate EBE or SBE (subject to verification)	Items of Work and/or Description of Work or Service Subcontracted or Materials to be provided to complete contract	Estimated Dollar Value of Work / Services Provided **FOR BASE BID**

FM 440 (Rev. 2/25/04)

COPY AND ATTACH ADDITIONAL SHEETS AS NECESSARY

Page 2 of 2

EBE AND SBE CERTIFICATION STATEMENTS ARE DUE BY THE CLOSE OF BUSINESS TWO DAYS AFTER BID OPENING TO: TIM HOPPER, CONTRACTS OFFICER, FOR BID TO BE RESPONSIVE

FOLLOWING FORMS TO BE FILLED OUT

AND SIGNED

ONLY

IF AWARDED CONTRACT

AGREEMENT
(Construction Contract Over $25,000)

THIS AGREEMENT, dated for identification JANUARY 28 , 2014, is made and entered into between the CITY OF SACRAMENTO, a municipal corporation ("City"), and ABIDE BUILDERS, INC., 4992 ALLISON PARKWAY, SUITE A, VACAVILLE, CA 95688 ("Contractor"), in the amount of EIGHT HUNDRED THIRTY SIX THOUSAND THREE HUNDRED SIXTY DOLLARS AND NO CENTS ($836,360.00) for the base bid and additive alternates 1&2.

The City and Contractor hereby mutually agree as follows:

1. CONTRACT DOCUMENTS

The Contract Documents, sometimes also referred to as the "Contract," consist of the following items, which are hereby incorporated by reference as if set forth in full in this Agreement:

The Notice to Contractors
The Proposal Form submitted by the Contractor
The Instructions to Bidders
The Emerging and Small Business Enterprise (ESBE) Requirements
The Requirements for the Non-Discrimination in Employee Benefits by City Contractors Ordinance and the Declaration of Compliance
California Labor Code Relating to Apprentices on Public Works
The City's Reference Guide for Construction Contracts
The Addenda, if any
This Agreement
The Standard Specifications
The Special Provisions
The Plans and Technical Specifications
The drawings and other data and all developments thereof prepared by City pursuant to the Contract
Any modifications of any of the foregoing made or approved by City, including but not limited to duly authorized change orders.

Unless specifically noted otherwise, references to the "Standard Specifications" shall mean and refer to the Standard Specifications for Public Construction of the City of Sacramento approved by the Sacramento City Council on June 4, 2007 (Resolution No. 2007-350), and any subsequent amendments thereto approved by the Sacramento City Council or the Sacramento City Manager. Work called for in any one Contract Document and not mentioned in another is to be performed and executed as if mentioned in all Contract Documents. The table of contents, titles and headings contained in the Contract Documents are provided solely to facilitate reference to various provisions of the Contract Documents and in no way affect or limit the interpretation of the provisions to which they refer.

2. DEFINITIONS

Unless otherwise specifically provided herein, all words and phrases defined in the Standard Specifications shall have the same meaning and intent in this Agreement.

3. AGREEMENT CONTROLS

In the event of a conflict between any of the terms and conditions set forth in this Agreement and the terms and conditions set forth in other Contract Documents, the terms and conditions set forth in this Agreement shall prevail, except that the provisions of any duly authorized change order shall prevail over any conflicting provisions of this Agreement.

4. SCOPE OF CONTRACT

Contractor agrees to furnish all tools, equipment, apparatus, facilities, labor, material and transportation necessary to perform and complete in a good and workmanlike manner to the satisfaction of City, all the Work called for in the Contract Documents entitled:

DOGWOOD PARK DEVELOPMENT (L19185000)

including the Work called for in the following alternative bid items described in the Proposal Form:

ADDITIVE ALTERNATES 1&2

Contractor agrees to perform such Work in the manner designated in and in strict conformity with the Contract Documents.

5. CONTRACT AMOUNT AND PAYMENTS

City agrees to pay and Contractor agrees to accept, as complete payment for the above Work, in accordance with the schedule and procedures set forth in the Contract Documents and subject to deductions, withholdings and additions as specified in the Contract Documents, a total sum that shall not exceed the total bid amount set forth in Contractor's Proposal Form. In addition, subject to deductions, withholdings and additions as specified in the Contract Documents, payment for individual items of the Work shall be computed as follows:

(A) For items of the Work for which a lump sum price is specified in Contractor's Proposal Form, Contractor shall be paid the lump sum price(s) specified in Contractor's Proposal Form; and

(B) For items of the Work for which a unit price is specified in Contractor's Proposal Form, Contractor shall be paid the sum computed at such unit price, or computed at a different price if such different price is determined by City in accordance with the Standard Specifications, based on the actual amount of each such item performed and/or furnished and incorporated in the Work; provided that in no event shall the total sum for a unit price item exceed the total bid amount set forth for such item in the Contractor's Proposal Form, unless authorized by Change Order.

6. PROGRESS PAYMENTS

Subject to the terms and conditions of the Contract, City shall cause payments to be made upon demand of Contractor as follows:

(A) On or about the first of the month, the Engineer shall present to the Contractor a statement showing the amount of labor and materials incorporated in the Work through the twentieth (20) calendar day of the preceding month. After both Contractor and Engineer approve the statement in writing, and the City's labor compliance officer provides written approval, the

City shall issue a certificate for ninety-five (95) percent of the amount it shall find to be due, subject to any deductions or withholdings authorized or required under the Contract or any applicable Laws or Regulations.

(B) No inaccuracy or error in said monthly estimates shall operate to release Contractor from damages arising from such Work or from enforcement of each and every provision of the Contract Documents, and City shall have the right subsequently to correct any error made in any estimate for payment.

(C) Contractor shall not be paid for any defective or improper Work.

(D) The remaining five (5) percent of the value of the Work performed under the Contract, if unencumbered and subject to any deductions or withholdings authorized or required under the Contract or any applicable Laws or Regulations, shall be released not later than sixty (60) days after completion and final acceptance of the Work by City. Acceptance by Contractor of the final payment shall constitute a waiver of all claims against the City arising under the Contract Documents, except for disputed claims in stated amounts that the Contractor specifically reserves in writing, but only to the extent that the Contractor has complied with all procedures and requirements applicable to the presentation and processing of such claim(s) under the Contract Documents. Contractor shall be entitled to substitute securities for retention or to direct that payments of retention be made into escrow, as provided in Public Contract Code Section 22300, upon execution of the City's Escrow Agreement for Security Deposits in Lieu of Retention.

(E) The parties agree that, for purposes of the timely progress payment requirements specified in Public Contract Code Section 20104.50, the date that the City receives a statement jointly approved by the Contractor and the Engineer as provided above shall be deemed to constitute the date that City receives an undisputed and properly submitted payment request from the Contractor. Progress payments not made within 30 days after this date may be subject to payment of interest as provided in Public Contract Code Section 20104.50.

7. RETENTION OF SUMS CHARGED AGAINST CONTRACTOR

When, under the provisions of this Contract or any applicable Laws or Regulations, City is authorized or required to withhold, deduct or charge any sum of money against Contractor, City may deduct and retain the amount of such charge from the amount of the next succeeding progress estimate(s), or from any other moneys due or that may become due Contractor from City. If, on completion or termination of the Contract, sums due Contractor are insufficient to pay City's charges, City shall have the right to recover the balance from Contractor or its Sureties.

8. COMMENCEMENT AND PROSECUTION OF WORK

Contractor shall commence the Work not later than fifteen (15) working days after the date of the written Notice to Proceed from City to Contractor and shall diligently prosecute the Work to final completion. The phase "commence the Work" means to engage in a continuous program on-site including, but not limited to, site clearance, grading, dredging, land filling and the fabrications, erection, or installation of the Work. The Notice to Proceed shall be issued within fifteen (15) calendar days following execution of the Agreement by the City and the filing by Contractor of the required Bonds and proof of insurance, provided that the Engineer may delay issuance of the Notice to Proceed if the Engineer determines in the Engineer's sole discretion that conditions on

the site of the Work are unsuitable for commencement of the Work. After the Notice to Proceed is issued, the continuous prosecution of Work by Contractor shall be subject only to Excusable Delays as defined in this Agreement.

9. TIME OF COMPLETION

The entire Work shall be brought to completion in the manner provided for in the Contract Documents on or before EIGHTY (80) WORKING days from the date of the Notice to Proceed (hereinafter called the "Completion Date") unless extensions of time are granted in accordance with the Contract Documents, NINETY (90) Calendar days for the plant establishment period. **The Notice to Proceed for this project will be issued on March 24, 2014 with the intent that Construction operations will begin no later than April 14, 2014.**

Failure to complete the entire Work by the Completion Date and in the manner provided for in the Contract Documents shall subject Contractor to liquidated damages as provided in this Agreement. Time is and shall be of the essence in the performance of the Contract and the Work.

10. PAYMENTS DO NOT IMPLY ACCEPTANCE OF WORK

The payment of any progress payment, or the acceptance thereof by Contractor, shall not constitute acceptance of the Work or any portion thereof and shall in no way reduce the liability of Contractor to replace unsatisfactory work or material, whether or not the unsatisfactory character of such work or material was apparent or detected at the time such payment was made.

11. ACCEPTANCE NOT RELEASE

Contractor shall correct immediately any defective or imperfect work or materials that may be discovered before final acceptance of the entire Work, whether or not such defect or imperfection was previously noticed or identified by the City. The inspection of the Work, or any part thereof, shall not relieve Contractor of any of its obligations to perform satisfactory work as herein specified.

Failure or neglect on the part of City or any of its officers, employees or authorized agents to discover, identify, condemn or reject defective or imperfect work or materials shall not be construed to imply an acceptance of such work or materials, if such defect or imperfection becomes evident at any time prior to final acceptance of the entire Work, nor shall such failure or neglect be construed as barring City from enforcing Contractor's warranty(ies) or otherwise recovering damages or such a sum of money as may be required to repair or rebuild the defective or imperfect work or materials whenever City may discover the same, subject only to any statutes of limitation that may apply to any such claim.

12. CITY'S RIGHT TO TAKE POSSESSION OF THE WORK IN WHOLE OR IN PART

The City shall have the right at any time to enter upon the Work and perform work not covered by this Contract, or to occupy and use a portion of the Work, prior to the date of the final acceptance of the Work as a whole, without in any way relieving Contractor of any obligations under this Contract.

13. NO WAIVER OF REMEDIES

Neither the inspection by City, its officers, employees or agents, nor any certificate or other approval for the payment of money, nor any payment for, nor acceptance of the whole or any part of the Work by City, nor any extensions of time, nor any position taken by City, its officers, employees or its agents shall operate as a waiver of any provision of the Contract Documents nor of any power herein reserved to City or any right to damages herein provided, nor shall any waiver of any breach of this Agreement be held to be a waiver of any other or subsequent breach. All remedies provided in the Contract Documents shall be taken and construed as cumulative; in addition to each and every other remedy herein provided, the City shall have any and all equitable and legal remedies that it would in any case have.

14. WARRANTY

Except as otherwise expressly provided in the Contract Documents, and excepting only items of routine maintenance, ordinary wear and tear and unusual abuse or neglect by City, Contractor warrants and guarantees all Work executed and all supplies, materials and devices of whatsoever nature incorporated in or attached to the Work, or otherwise provided as a part of the Work pursuant to the Contract, to be absolutely free of all defects of workmanship and materials for a period of one year after final acceptance of the entire Work by the City. Contractor shall repair or replace all work or material, together with any other work or material that may be displaced or damaged in so doing, that may prove defective in workmanship or material within this one year warranty period without expense or charge of any nature whatsoever to City.

In the event that Contractor shall fail to comply with the conditions of the foregoing warranty within ten (10) days after being notified of the defect in writing, City shall have the right, but shall not be obligated, to repair, or obtain the repair of, the defect and Contractor shall pay to City on demand all costs and expense of such repair. Notwithstanding anything herein to the contrary, in the event that any defect in workmanship or material covered by the foregoing warranty results in a condition that constitutes an immediate hazard to public health or safety, or any property interest, or any person, City shall have the right to immediately repair, or cause to be repaired, such defect, and Contractor shall pay to City on demand all costs and expense of such repair. The foregoing statement relating to hazards to health, safety or property shall be deemed to include both temporary and permanent repairs that may be required as determined in the sole discretion and judgment of City.

In addition to the above, the Contractor shall make a written assignment of all manufacturer's and other product warranties to the City, prior to completion and final acceptance of the Work by City.

The Contractor's Performance Bond shall secure the performance of the Contractor's obligations under this Section 14, and the Contractor and its Surety shall be jointly and severally liable for these obligations.

15. LIQUIDATED DAMAGES IF WORK NOT COMPLETED ON TIME

(A) The actual fact of the occurrence of damages and the actual amount of the damages that City would suffer if the entire Work, and/or any specified portion thereof, were not completed within the time(s) specified herein are dependent upon many circumstances and conditions that could prevail in various combinations, and for this reason, it is impracticable and extremely difficult to fix the actual damages. Damages that City would suffer in the event of such delay include: loss of the use of the project; expenses of prolonged assignment to the project of an

architectural and/or engineering staff; prolonged costs of administration, inspection, and supervision; increased operational expenses and/or impaired operation of other facilities dependent upon completion of the project; and the loss and inconvenience suffered by the public within the City of Sacramento by reason of the delay in the completion of the project or portion thereof. Accordingly, the parties agree, and by execution of this Agreement, Contractor acknowledges that it understands and agrees, that the amount(s) set forth herein as liquidated damages reflect the parties' best efforts at the time of entering into the Contract to estimate the damages that may be incurred by City and the public due to the Contractor's delay in completion of the Work and/or any specified portion thereof, and shall be presumed to be the amount of damages sustained by the failure of Contractor to complete the entire Work and/or any specified portion thereof within the time(s) specified herein.

(B) Contractor shall pay liquidated damages to City for failure to complete the entire Work by the Completion Date (as extended in accordance with the Contract Documents, if applicable) in the amount of ONE THOUSAND ($1,000.00) DOLLARS for each calendar day after the Completion Date (as extended in accordance with the Contract Documents, if applicable), continuing to the time at which the entire Work is completed. Such amount is the actual cash value agreed upon by the City and Contractor as the loss to City and the public resulting from Contractor's default.

The parties agree, and by execution of this Agreement, Contractor acknowledges that it understands and agrees, that the foregoing provisions provide for the imposition of liquidated damages from the Completion Date (as extended in accordance with the Contract Documents, if applicable) until the date of completion of the entire Work as determined by the Engineer in accordance with Section 8-4 of the Standard Specifications, whether or not the Work or any portion thereof is claimed or determined to be substantially complete prior to such date of completion.

THE FOLLOWING ADDITIONAL LIQUIDATED DAMAGES PROVISION(S) APPLY IF CHECKED:

☐ In addition to the liquidated damages specified above, Contractor shall pay additional liquidated damages to City for failure to complete the portion of the Work specified below by the milestone date specified below (as such milestone date may be extended in accordance with the Contract Documents, if applicable). The amount of such additional liquidated damages shall be either *[check one]*:

☐ a lump sum amount of _____, OR

☐ the daily amount of _____ for each calendar day after such milestone date (as extended in accordance with the Contract Documents, if applicable), continuing to the time at which such portion of the Work is completed.

Such amount is the actual cash value agreed upon by the City and Contractor as the additional loss to City and the public resulting from Contractor's default.

Portion of the Work	Milestone Date
_____	_____

_____ _____

CONTRACTOR'S ACKNOWLEDGMENT:_____

☐ In addition to the potential damages described above, failure to complete the entire Work within the time(s) specified herein may expose the City to penalties or fines and/or may negatively affect the availability of project funding. In recognition of these potential damages, in addition to the liquidated damages specified above, Contractor shall pay additional liquidated damages to City in the lump sum amount of _____ if the entire Work is not completed by _____. Such amount is the actual cash value agreed upon by the City and Contractor as the additional loss to City and the public resulting from Contractor's default.

CONTRACTOR'S ACKNOWLEDGMENT:_____

(C) In the event Contractor shall become liable for liquidated damages, City, in addition to all other remedies provided by law, shall have the right to withhold any and all payments that otherwise would be or become due Contractor until the liability of Contractor under this section is finally determined. City shall have the right to use and apply such payments, in whole or in part, to reimburse City for all liquidated damages due or to become due to City. Any remaining balance of such payments shall be paid to Contractor only after discharge in full of all liability incurred by Contractor under this section or otherwise under any provision of the Contract Documents or any applicable Law or Regulation. If the sum so retained by City is not sufficient to discharge all such liabilities of Contractor, Contractor shall continue to remain liable to City until all such liabilities are satisfied in full. No failure by City to withhold any payment as specified above shall in any manner be construed to constitute a release of any such liabilities nor a waiver of the City's right to withhold payment for such liabilities.

16. INDEMNITY AND HOLD HARMLESS

(A) Contractor shall defend, hold harmless and indemnify the City, its officers, employees, and agents, and each and every one of them, from and against any and all actions, damages, costs, liabilities, claims, demands, losses, judgments, penalties, costs and expenses of every type and description, whether arising on or off the site of the Work, including, but not limited to, any fees and/or costs reasonably incurred by City's staff attorneys or outside attorneys and any fees and expenses incurred in enforcing this provision (hereafter collectively referred to as "Liabilities"), including but not limited to Liabilities arising from personal injury or death, damage to personal, real or intellectual property or the environment, contractual or other economic damages, or regulatory penalties, arising out of or in any way connected with performance of or failure to perform the Work by the Contractor, any subcontractor or agent, anyone directly or indirectly employed by any of them or anyone for whose acts any of them may be liable, whether or not (i) such Liabilities are caused in part by a party indemnified hereunder, or (ii) such Liabilities are litigated, settled or reduced to judgment; provided that the foregoing indemnity does not apply to liability for damages for death or bodily injury to persons, injury to property, or other loss, damage or expense to the extent arising from (i) the sole negligence or willful misconduct of, or defects in design furnished by, City, its agents, servants, or independent contractors who are directly responsible to City, or (ii) the active negligence of City.

(B) The existence or acceptance by City of any of the insurance policies or coverages

described in this Agreement shall not affect or limit any of City's rights under this Section 16, nor shall the limits of such insurance limit the liability of Contractor hereunder. The provisions of this Section 16 shall survive any expiration or termination of the Contract.

17. CONTRACTOR SHALL ASSUME RISKS

Until the completion and final acceptance by City of all Work under this Contract, the Work shall be under Contractor's responsible care and charge, and Contractor, at no cost to City, shall rebuild, repair, restore and make good all injuries, damages, re-erections, and repairs occasioned or rendered necessary by accidental causes of any nature, to all or any portions of the Work.

18. GENERAL LIABILITY OF CONTRACTOR

Except as otherwise herein expressly stipulated, Contractor shall perform all the Work and furnish all the labor, materials, tools, equipment, apparatus, facilities, transportation, power and light, and appliances, necessary or proper for performing and completing the Work herein required in the manner and within the time herein specified. The mention of any specific duty or liability of Contractor shall not be construed as a limitation or restriction of any general liability or duty of Contractor, and any reference to any specific duty or liability shall be construed to be solely for the purpose of explanation.

19. INSURANCE

During the entire term of this Contract and until completion and final acceptance of the Work as provided in the Contract Documents, Contractor shall maintain in full force and effect the insurance coverage described in this section.

Full compensation for all premiums that Contractor is required to pay for the insurance coverage described herein shall be included in the compensation specified for performance of the Work under the Contract. No additional compensation will be provided for Contractor's insurance premiums.

It is understood and agreed by the Contractor that its liability to the City shall not in any way be limited to or affected by the amount of insurance coverage required of or carried by the Contractor.

(A) Minimum Scope and Limits of Insurance Coverage

(1) Commercial General Liability Insurance, providing coverage at least as broad as ISO CGL Form 00 01 on an occurrence basis for bodily injury, including death, of one or more persons, property damage and personal injury, with limits of not less than one million dollars ($1,000,000) per occurrence. The policy shall provide contractual liability and products and completed operations coverage for the term of the policy.

(2) Automobile Liability Insurance providing coverage at least as broad as ISO Form CA 00 01 on an occurrence basis for bodily injury, including death, of one or more persons, property damage and personal injury, with limits of not less than one million dollars ($1,000,000) per occurrence. The policy shall provide coverage for owned, non-owned and/or hired autos as appropriate to the operations of the Contractor.

(3) Workers' Compensation Insurance with statutory limits, and Employers' Liability Insurance with limits of not less than one million dollars ($1,000,000). The Worker's Compensation policy shall include a waiver of subrogation.

(B) Additional Insured Coverage

(1) Commercial General Liability Insurance: The City, its officials, employees and volunteers shall be covered by policy terms or endorsement as additional insureds as respects general liability arising out of activities performed by or on behalf of Contractor, products and completed operations of Contractor, and premises owned, leased or used by Contractor. The general liability additional insured endorsement must be signed by an authorized representative of the insurance carrier.

If the policy includes a blanket additional insured endorsement or contractual additional insured coverage, the above signature requirement may be fulfilled by submitting that document with a signed declaration page referencing the blanket endorsement or policy form.

(2) Automobile Liability Insurance: The City, its officials, employees and volunteers shall be covered by policy terms or endorsement as additional insureds as respects auto liability.

(C) Other Insurance Provisions

The policies are to contain, or be endorsed to contain, the following provisions:

(1) Contractor's insurance coverage shall be primary insurance as respects City, its officials, employees and volunteers. Any insurance or self-insurance maintained by City, its officials, employees or volunteers shall be in excess of Contractor's insurance and shall not contribute with it.

(2) Any failure to comply with reporting provisions of the policies shall not affect coverage provided to City, its officials, employees or volunteers.

(3) Coverage shall state that Contractor's insurance shall apply separately to each insured against whom claim is made or suit is brought, except with respect to the limits of the insurer's liability.

(4) City will be provided with thirty (30) days written notice of cancellation or material change in the policy language or terms.

(D) Acceptability of Insurance

Insurance shall be placed with insurers with a Bests' rating of not less than A:V. Self-insured retentions, policy terms or other variations that do not comply with the requirements of this Section 19 must be declared to and approved by the City Risk Management Division in writing prior to execution of this Agreement.

(E) Verification of Coverage

(1) Contractor shall furnish City with certificates and required endorsements evidencing the insurance required. The certificates and endorsements shall be forwarded to the City representative designated by City. Copies of policies shall be delivered to the City on demand. Certificates of insurance shall be signed by an authorized representative of the insurance carrier.

(2) The City may withdraw its offer of contract or cancel the Contract if the certificates of insurance and endorsements required have not been provided prior to execution of this Agreement. The City may withhold payments to Contractor and/or cancel the Contract if the insurance is canceled or Contractor otherwise ceases to be insured as required herein.

(F) Subcontractors

Contractor shall require and verify that all subcontractors maintain insurance coverage that meets the minimum scope and limits of insurance coverage specified in subsection A, above.

20. FAILURE TO MAINTAIN BONDS OR INSURANCE

If, at any time during the performance of this Contract, Contractor fails to maintain any item of the bonds and/or insurance required under the Contract in full force and effect, Contractor shall immediately suspend all work under the Contract and notify City in writing of such failure. After such notice is provided, or if City discovers such failure and notifies Contractor, the City thereafter may withhold all Contract payments due or that become due until notice is received by City that such bonds and/or insurance have been restored in full force and effect and that the premiums therefor have been paid for a period satisfactory to the Division of Risk Management. Contractor shall not resume work until notified by City to do so, and the City shall have no responsibility or liability for any costs incurred by Contractor as a result of such suspension of Work.

In addition to the foregoing, any failure to maintain any item of the required bonds and/or insurance at any time during the performance of this Contract will be sufficient cause for termination of the Contract by City.

The Contractor shall be solely responsible for, and shall defend, indemnify and hold harmless the City, its officers, employees and agents against and from, any and all damages, claims, losses, actions, costs or other expenses of any kind incurred by any party as a direct or indirect result of any suspension of Work or termination of the Contract under the provisions of this Section.

21. EXCUSABLE DELAYS

For the purpose of these Contract Documents, the term "Excusable Delay" shall mean, and is limited to, delay caused directly by: acts of God; acts of a public enemy; fires; inclement weather as determined by the Engineer; riots; insurrections; epidemics; quarantine restrictions; strikes; lockouts; sitdowns; acts of a governmental agency; priorities or privileges established for the manufacture, assemble, or allotment of materials necessary in the Work by order, decree or otherwise of the United States or by any department, bureau, commission, committee, agent, or administrator of any legally constituted public authority; changes in the Work ordered by City insofar as they necessarily require additional time in which to complete the Work; the prevention

of Contractor from commencing or prosecuting the Work because of the acts of others, excepting Contractor's subcontractors or suppliers; or the prevention of Contractor from commencing or prosecuting the Work because of a Citywide failure of public utility service.

The term "Excusable Delay" shall specifically not include: (i) any delay that could have been avoided by the exercise of care, prudence, foresight and diligence on the part of Contractor; (ii) any delay in the prosecution of any part of the Work that does not constitute a Controlling Operation, whether or not such delay is unavoidable; (iii) any reasonable delay resulting from time required by City for review of any Contractor submittals and for the making of surveys, measurements and inspection; and, (iv) any delay arising from an interruption in the prosecution of the Work on account of reasonable interference by other Contractors employed by City that does not necessarily prevent the completion of the entire Work within the time specified. Excusable Delays, if any, shall operate only to extend the Completion Date (not in excess of the period of such delay as determined by City) and shall not under any circumstances increase the amount City is required to pay Contractor except as otherwise provided in these Contract Documents.

22. CONTRACTOR TO SERVE NOTICE OF DELAYS

Whenever Contractor foresees any delay in the prosecution of the Work, and in any event as soon as possible (not to exceed a period of ten (10) calendar days) after the initial occurrence of any delay that Contractor regards as or may later claim to be an Excusable Delay, the Contractor shall notify the Engineer in writing of such delay and its cause, in order that the Engineer: (i) may take immediate steps to prevent if possible the occurrence or continuance of the delay; or (ii) if this cannot be done, may determine whether the delay is to be considered excusable, how long it continues, and to what extent the prosecution and completion of the Work are delayed thereby. Said written notice shall constitute an application for an extension of time only if the notice requests such an extension and sets forth the Contractor's estimate of the additional time required together with a full description of the cause of the delay relied upon.

After the completion of any part or whole of the Work, the Engineer, in estimating the amount due Contractor, will assume that any and all delays that may have occurred in its prosecution and completion were not Excusable Delays, except for such delays for which the Contractor has provided timely written notice as required herein, and that the Engineer has found to be excusable. Contractor shall not be entitled to claim Excusable Delay for any delay for which the Contractor failed to provide such timely written notice.

23. EXTENSION OF TIME

If the Contractor complies with Section 22, above, and the Engineer finds a delay claimed by the Contractor to be an Excusable Delay, the Contractor shall be allowed an extension of time to complete the Work that is proportional to the period of Excusable Delay determined by the Engineer, subject to the approval by City of a change order granting such time extension. During a duly authorized extension for an Excusable Delay, City shall not charge liquidated damages against the Contractor for such delay.

If the City extends the time to complete the Work as provided herein, such extension shall in no way release any warranty or guarantee given by Contractor pursuant to the provisions of the Contract Documents, nor shall such extension of time relieve or release the sureties of the Bonds provided pursuant to the Contract Documents. By executing such Bonds, the Sureties shall be deemed to have expressly agreed to any such extension of time. The granting of any extension of

time as provided herein shall in no way operate as a waiver on the part of City of its rights under this Contract, excepting only extension of the Completion Date for such period of Excusable Delay as may be determined by the Engineer and approved by a duly authorized change order.

24. NO PAYMENT FOR DELAYS

No damages or compensation of any kind shall be paid to Contractor or any subcontractor because of delays in the progress of the Work whether or not such delays qualify for extension of time under this Agreement; except that this provision shall not preclude the recovery of damages for a delay caused by the City that is unreasonable under the circumstances and that is not within the contemplation of the parties, provided that the Contractor timely submits all such written notice(s) and fully complies with such other procedures as may be specified in the Contract Documents or any Laws or Regulations for Contractor to claim damages for such delay.

25. CHANGES IN THE WORK

Changes in the Work authorized or directed in accordance with the Contract Documents and extensions of time of completion made necessary by reason thereof shall not in any way release any warranty or guarantee given by Contractor pursuant to the provisions of the Contract Documents, nor shall such changes in the Work relieve or release the Sureties on Bonds provided pursuant to the Contract Documents. By executing such Bonds, the Sureties shall be deemed to have expressly agreed to any such change in Work and to any extension of time made by reason thereof.

26. TERMINATION AFTER COMPLETION DATE

In addition to any other rights City may have, if any services or work required under the Contract (including but not limited to punch list items) are not completed as of the Completion Date (as adjusted by any extensions of time for Excusable Delays granted pursuant to the Contract Documents), City may terminate the Contract at any time after the Completion Date (as adjusted by any extensions of time for Excusable Delays granted pursuant to the Contract Documents), by providing a written notice to Contractor specifying the date of termination. Such notice also may specify conditions or requirements that Contractor must meet to avoid termination of the Contract on such date. If Contractor fails to fulfill all such conditions and requirements by such termination date, or, if no such conditions or requirements are specified, Contractor shall cease rendering services and performing work on such termination date, and shall not be entitled to receive any compensation for services rendered or work performed after such termination date. In the event of such termination, Contractor shall remain liable to City for liquidated damages incurred for any period of time prior to the termination date.

In addition to any other charges, withholdings or deductions authorized under the Contract or any Laws or Regulations, if City terminates the Contract pursuant to this section, City may withhold and deduct from any payment and/or retention funds otherwise due Contractor any sum necessary to pay the City's cost of completing or correcting, or contracting for the completion or correction of, any services or work under the Contract that are not completed to the satisfaction of the City or that otherwise are deficient or require correction as of such termination date, including but not limited to incomplete punch list items. Such costs shall include all of the City's direct and indirect costs incurred to complete or correct such services or work, including the City's administrative and overhead costs. If the amount of payment(s) and/or retention funds otherwise due the Contractor are insufficient to pay such costs, City shall have the right to recover the balance of such costs from the Contractor and/or its Surety(ies).

27. TERMINATION FOR CONVENIENCE

Upon written notice to the Contractor, the City may at any time, without cause and without prejudice to any other right or remedy of the City, elect to terminate the Contract for the convenience of City. In such case, the Contractor shall be paid (without duplication of any items, and after deduction and/or withholding of any amounts authorized to be deducted or withheld by the Contract Documents or any Laws or Regulations):

(A) For Work executed in accordance with the Contract Documents prior to the effective date of termination and determined to be acceptable by the Engineer, including fair and reasonable sums for overhead and profit on such Work;

(B) For reasonable claims, costs, losses, and damages incurred in settlement of terminated contracts with subcontractors, suppliers, and others; and

(C) For reasonable expenses directly attributable to termination.

Contractor shall not be paid for any loss of anticipated profits or revenue for any Work not performed prior to termination, nor for any economic loss arising out of or resulting from such termination, except for the payments listed in this section. Contractor's warranty under Section 14 of this Agreement shall apply, and Contractor shall remain responsible for all obligations related to such warranty, with respect to all portions of the Work performed prior to the effective date of the termination for convenience pursuant to this section. The City shall be entitled to have any or all remaining Work performed by other contractors or by any other means at any time after the effective date of a termination for convenience pursuant to this section.

28. TERMINATION FOR BREACH OF CONTRACT

If Contractor abandons the Work under this Contract, or if the Contract or any portion of the Contract is sublet or assigned without the consent of the City, or if the Engineer determines in the Engineer's sole discretion that the conditions of the Contract in respect to the rate of progress of the Work are not being fulfilled or any part thereof is unnecessarily delayed, or if Contractor violates or breaches, or fails to execute in good faith, any of the terms or conditions of the Contract, or if Contractor refuses or fails to supply enough properly skilled labor or materials or refuses or fails to make prompt payment to subcontractors for material or labor, or if Contractor disregards any Laws or Regulations or proper instruction or orders of the Engineer, then, notwithstanding any provision to the contrary herein, the City may give Contractor and its Sureties written notification to immediately correct the situation or the Contract shall be terminated.

In the event that such notice is given, and, in the event such situation is not corrected, or arrangements for correction satisfactory to the City are not made, within ten (10) calendar days from the date of such notice or within such other period of time as may be specified by the City in the notice, the Contract shall upon the expiration of said period cease and terminate. In the event of any such termination, City may take over the Work and prosecute the Work to completion, or otherwise, and the Contractor and its Sureties shall be liable to City for any cost occasioned City thereby, as hereinafter set forth.

In the event City completes the Work, or causes the Work to be completed, no payment of any kind shall be made to Contractor until the Work is complete. The cost of completing the Work, including but not limited to, extra costs of project administration and management incurred by City, both direct or indirect, shall be deducted from any sum then due, or that becomes due, to Contractor from City. If sums due to Contractor from City are less than the cost of completing the Work, Contractor and its Sureties shall pay City a sum equal to this difference on demand. In the event City completes the Work, and there is a sum remaining due to Contractor after City deducts the costs of completing the Work, then City shall pay such sum to Contractor. The Contractor and Contractor's Sureties shall be jointly and severally liable for all obligations imposed on Contractor hereunder.

No act by City before the Work is finally accepted, including, but not limited to, exercise of other rights under the Contract, actions at law or in equity, extensions of time, payments, assessments of liquidated damages, occupation or acceptance of any part of the Work, waiver of any prior breach of the Contract or failure to take action pursuant to this section upon the happening of any prior default or breach of Contractor, shall be construed to be a waiver or estoppel of the City's right to act pursuant to this Section upon any subsequent event, occurrence or failure by Contractor to fulfill the terms and conditions of the Contract. The rights of City to terminate the Contract pursuant to this Section and pursuant to Sections 26 and 27 are cumulative and are in addition to all other rights of City pursuant to the Contract and at law or in equity.

29. CONTRACTOR BANKRUPT

If Contractor should commence any bankruptcy proceeding, or if Contractor is adjudged a bankrupt, or if Contractor makes any assignment for the benefit of creditors, or if a receiver is appointed on account of Contractor's insolvency, then the City may, without prejudice to any other right or remedy, terminate the Contract and complete the work by giving notice as provided in Section 28 above.

30. SURETIES' OBLIGATIONS UPON TERMINATION

If the City terminates the Contract pursuant to Section 28 or Section 29 above:

(A) The Surety under Contractor's performance bond shall be fully responsible for all of the Contractor's remaining obligations of performance under the Contract as if the Surety were a party to the Contract, including without limitation Contractor's obligations, as provided in the Contract Documents, to complete and provide a one-year warranty of the entire Work, pay liquidated damages and indemnify, defend and hold harmless City, up to the full amount of the performance bond.

(B) The Surety under Contractor's payment bond shall be fully responsible for the performance of all of the Contractor's remaining payment obligations for work, services, equipment or materials performed or provided in connection with the Work or any portion thereof, up to the full amount of the payment bond.

31. ACCOUNTING RECORDS OF CONTRACTOR

During performance of the Contract and for a period of three (3) years after completing the entire Work, Contractor shall maintain all accounting and financial records related to the Contract and performance of the Work in accordance with generally accepted accounting practices, and shall keep and make such records available for inspection and audit by

representatives of the City upon reasonable written notice.

32. USE TAX REQUIREMENTS

During the performance of this Agreement, CONTRACTOR, for itself, its assignees and successors in interest, agrees as follows:

(A) Use Tax Direct Payment Permit: For all leases and purchases of materials, equipment, supplies, or other tangible personal property used to perform the Agreement and shipped from outside California, the Contractor and any subcontractors leasing or purchasing such materials, equipment, supplies or other tangible personal property shall obtain a Use Tax Direct Payment Permit from the California State Board of Equalization ("SBE") in accordance with the applicable SBE criteria and requirements.

(B) Sellers Permit: For any construction contract and any construction subcontract in the amount of $5,000,000 or more, Contractor and the subcontractor(s) shall obtain sellers permits from the SBE and shall register the jobsite as the place of business for the purpose of allocating local sales and use tax to the City. Contractor and its subcontractors shall remit the self-accrued use tax to the SBE, and shall provide a copy of each remittance to the City.

(C) The above provisions shall apply in all instances unless prohibited by the funding source for the Agreement.

IN WITNESS WHEREOF, the parties hereto have signed this Agreement on the date set for opposite their names.

CONTRACTOR

Under penalty of perjury, I certify that the taxpayer identification number and all other information provided here are correct.

DATE 1/15/14

BY

Print Name JEFF LOVITT V.P.

Title

BY

Print Name PHIL J. PIZZO PRESIDENT

Title

20-8176426

Federal ID#

272-6296-3

State ID#

City of Sacramento Business Operation Tax Certificate No. (City will not award contract until Certificate Number is obtained) 157420

Type of Business Entity *(check one)*:

_____ Individual/Sole Proprietor
_____ Partnership
✓ Corporation
_____ Limited Liability Company
_____Other (*please specify:*_____)

CITY OF SACRAMENTO
a municipal corporation

DATE _____

BY _____
For: _____
City Manager

Original Approved As To Form:

_____
City Attorney

Attest:

_____
City Clerk

ISSUED IN DUPLICATE

CITY OF SACRAMENTO PERFORMANCE BOND

DUPLICATE ORIGINAL BOND

Bond No.: 106012259

Premium: $17,545.00

Page 1 of 1

WHEREAS, the City of Sacramento, State of California, hereinafter called City, has conditionally awarded to ABIDE BUILDERS, INC., 4992 ALLISON PARKWAY, SUITE A, VACAVILLE, CA 95688:

as principal, hereinafter called Contractor, a contract for construction of:

DOGWOOD PARK DEVELOPMENT (L19185000)

which contract is by reference incorporated herein and made a part hereof as if the Surety named below were a party to the contract, and is hereinafter referred to as the Contract; and

WHEREAS, under the terms of the Contract, Contractor is required to furnish a bond for the faithful performance of the Contract.

NOW, THEREFORE, we the Contractor and *(here insert full name and address of Surety)*:
Travelers Casualty and Surety Company of America, 11070 White Rock Road, Suite 130, Rancho Cordova, CA 95628
a corporation duly authorized and admitted to transact business and issue surety bonds in the State of California, hereinafter called Surety, are held and firmly bound unto the City, as obligee, in the sum of:
EIGHT HUNDRED THIRTY SIX THOUSAND THREE HUNDRED SIXTY DOLLARS AND NO CENTS ($836,360.00), for the payment of which sum well and truly to be made, we the Contractor and Surety bind ourselves, our heirs, executors, administrators, successors and assigns, jointly and severally. The condition of this obligation is such that, if the Contractor, Contractor's heirs, executors, administrators, successors or assigns, shall in all things stand to and abide by, and well and truly keep and fully perform all covenants, conditions and agreements required to be kept and performed by Contractor in the Contract and any changes, additions or alterations made thereto, to be kept and performed at the time and in the manner therein specified, and in all respects according to their true intent and meanings, and shall indemnify and save harmless the City, its officers, employees and agents, as therein provided, then the Surety's obligations under the Contract and this bond shall be null and void; otherwise they shall be and remain in full force and effect. This obligation shall remain in full force and effect through the end of the Contract warranty period, which will expire one year after the completion of work date specified in the Notice of Completion filed for the above-named project.

As part of the obligations secured hereby and in addition to the sum specified above, there shall be included all costs, expenses and fees, including attorney's fees, reasonably incurred by City in successfully enforcing such obligations, all to be taxed as costs and included in any judgment rendered.

The Surety, for value received, hereby stipulates and agrees that no change, extension of time, alteration or addition to the terms of the Contract or to the work to be performed thereunder or to the specifications accompanying the same shall in any way affect its obligations on this bond, and it does hereby waive notice of any such change, extension, alteration or addition.

IN WITNESS WHEREOF, this instrument has been duly executed by authorized representatives of the Contractor and Surety. SIGNED AND SEALED on January 15, 20 14. To be effective January 28, 2014.

Abide Builders, Inc.
(Contractor) (Seal)
By [signature]
Title V.P.

Travelers Casualty and Surety Company of America
(Surety) (Seal)
By Monica A. Hutchison
Title Monica A. Hutchison, Attorney-in-Fact

ORIGINAL APPROVED AS TO FORM:

City Attorney

Agent name & Address Warren G. Bender Co.
516 Gibson Drive, Suite 240, Roseville, CA 95678
Agent Phone # (916) 380-5325
Surety Phone # (916) 852-5266
California License # 0406967

Form approved by CAO 5-9-12

CALIFORNIA ALL-PURPOSE ACKNOWLEDGMENT

STATE OF CALIFORNIA

County of Placer }

On January 15, 2014 (Date) before me, Jason Michael Theis, Notary Public (Here Insert Name and Title of the Officer),

personally appeared Monica A. Hutchison (Name(s) of Signer(s)),

who proved to me on the basis of satisfactory evidence to be the person(s) whose name(s) is/are subscribed to the within instrument and acknowledged to me that he/she/they executed the same in his/her/their authorized capacity(ies), and that by his/her/their signature(s) on the instrument the person(s), or the entity upon behalf of which the person(s) acted, executed the instrument.

JASON MICHAEL THEIS
Commission # 1971739
Notary Public - California
Placer County
My Comm. Expires Mar 10, 2016

I certify under PENALTY OF PERJURY under the laws of the State of California that the foregoing paragraph is true and correct.

Witness my hand and official seal.

Signature (Signature of Notary Public)

Place Notary Seal Above

OPTIONAL

Though the information below is not required by law, it may prove valuable to persons relying on the document and could prevent fraudulent removal and reattachment of this form to another document.

Description of Attached Document

Title or Type of Document: _____

Document Date: _____ Number of Pages: _____

Signer(s) Other Than Named Above: _____

Capacity(ies) Claimed by Signer(s)

Signer's Name: _____
☐ Individual
☐ Corporate Officer — Title(s): _____
☐ Partner — ☐ Limited ☐ General
☐ Attorney in Fact
☐ Trustee s
☐ Guardian or Conservator
☐ Other: _____

Signer Is Representing:

RIGHT THUMBPRINT OF SIGNER
Top of thumb here

Signer's Name: _____
☐ Individual
☐ Corporate Officer — Title(s): _____
☐ Partner — ☐ Limited ☐ General
☐ Attorney in Fact
☐ Trustee
☐ Guardian or Conservator
☐ Other: _____

Signer Is Representing:

RIGHT THUMBPRINT OF SIGNER
Top of thumb here

© 2007 National Notary Association • 9350 De Soto Ave., P.O. Box 2402 • Chatsworth, CA 91313-2402 • www.NationalNotary.org Item #5907 Reorder: Call Toll-Free 1-800-876-6827

ISSUED IN DUPLICATE

CITYOF SACRAMENTO
PAYMENT BOND
DUPLICATE ORIGINAL BOND
Page 1 of 1

Bond No.: 106012259
Premium: Included

WHEREAS, the City of Sacramento, in the State of California, hereinafter called City, has conditionally awarded to: ABIDE BUILDERS, INC., 4992 ALLISON PARKWAY, SUITE A, VACAVILLE, CA 95688 hereinafter called Contractor, a contract for construction of:

DOGWOOD PARK DEVELOPMENT (L19185000)

Which contract is by reference incorporated herein and made a part hereof, and is hereinafter referred to as the Contract; and

WHEREAS, under the terms of the Contract and pursuant to Chapter 5 of Title 3 of Part 6 of Division 4 of the California Civil Code (commencing with Civil Code Section 9550), Contractor is required to furnish a good and sufficient payment bond to secure payment of the claims to which reference is made in Civil Code Section 9554.

NOW, THEREFORE, we the Contractor and (*here insert full name and address of Surety*):
Travelers Casualty and Surety Company of America, 11060 White Rock Road, Suite 130, Rancho Cordova, CA 95678
a corporation duly authorized and admitted to transact business and issue surety bonds in the State of California, hereinafter called Surety, are held and firmly bound unto the City, and unto all persons or entities entitled to assert a claim against a payment bond under any of the aforesaid Civil Code provisions in the sum of EIGHT HUNDRED THIRTY SIX THOUSAND THREE HUNDRED SIXTY DOLLARS AND NO CENTS ($836,360.00), on the condition that if Contractor shall fail to pay for any materials or equipment furnished or used in performance of the Contract, or for any work or labor thereon of any kind, or for amounts due under the Unemployment Insurance Act with respect to such work or labor, or for any amounts required to be deducted, withheld, and paid over to the Franchise Tax Board or the Employment Development Department from the wages of employees of the Contractor and all subcontractors with respect to such work or labor, then the Surety shall pay the same in an amount not exceeding the sum specified above. If suit is brought upon this bond, Surety shall pay, in addition to the above sum, all costs, expenses and fees, including attorney's fees, reasonably incurred by any party in successfully enforcing the obligation secured hereby, all to be taxed as costs and included in any judgment rendered. Should the condition of this bond be fully performed, then this obligation shall become null and void, otherwise it shall be and remain in full force and effect, and shall bind Contractor, Surety, their heirs, executors, administrators, successors and assigns, jointly and severally.

It is hereby stipulated and agreed that this bond shall inure to the benefit of all persons, companies, corporations, political subdivisions, State agencies and other entities entitled to assert a claim against a payment bond under any of the aforesaid Civil Code provisions, so as to give a right of action to them or their assigns in any suit brought upon this bond. The Surety, for value received, hereby stipulates and agrees that no change, extension of time, alteration or addition to the terms of the Contract or to the work to be performed thereunder or to the specifications accompanying the same shall in any way affect its obligations on this bond, and it does hereby waive notice of any such change, extension, alteration or addition.

IN WITNESS WHEREOF, this instrument has been duly executed by authorized representatives of the Contractor and Surety. SIGNED AND SEALED on January 15 , 20 14 . To be effective January 28, 2014.

Abide Builders, Inc.
(Contractor) (Seal)
By
Title V.P.

Travelers Casualty and Surety Company of America
(Surety) (Seal)
By Monica A. Hutchison
Title Monica A. Hutchison, Attorney-in-Fact

ORIGINAL APPROVED AS TO FORM:

City Attorney

Agent name & Address Warren G. Bender Co.
516 Gibson Drive, Suite 240, Roseville, CA 95678
Agent Phone # (916) 380-5325
Surety Phone # (916) 852-5266
California License # 0406967

Effective 7-1-12

CALIFORNIA ALL-PURPOSE ACKNOWLEDGMENT

STATE OF CALIFORNIA

County of Placer }

On January 15, 2014 (Date) before me, Jason Michael Theis, Notary Public (Here Insert Name and Title of the Officer),

personally appeared Monica A. Hutchison (Name(s) of Signer(s)),

who proved to me on the basis of satisfactory evidence to be the person(s) whose name(s) is/are subscribed to the within instrument and acknowledged to me that he/she/they executed the same in his/her/their authorized capacity(ies), and that by his/her/their signature(s) on the instrument the person(s), or the entity upon behalf of which the person(s) acted, executed the instrument.

JASON MICHAEL THEIS
Commission # 1971739
Notary Public - California
Placer County
My Comm. Expires Mar 10, 2016

I certify under PENALTY OF PERJURY under the laws of the State of California that the foregoing paragraph is true and correct.

Witness my hand and official seal.

Signature (Signature of Notary Public)

Place Notary Seal Above

OPTIONAL

Though the information below is not required by law, it may prove valuable to persons relying on the document and could prevent fraudulent removal and reattachment of this form to another document.

Description of Attached Document

Title or Type of Document: _____

Document Date: _____ Number of Pages: _____

Signer(s) Other Than Named Above: _____

Capacity(ies) Claimed by Signer(s)

Signer's Name: _____
☐ Individual
☐ Corporate Officer — Title(s): _____
☐ Partner — ☐ Limited ☐ General
☐ Attorney in Fact
☐ Trustee s
☐ Guardian or Conservator
☐ Other: _____

Signer Is Representing:

RIGHT THUMBPRINT OF SIGNER
Top of thumb here

Signer's Name: _____
☐ Individual
☐ Corporate Officer — Title(s): _____
☐ Partner — ☐ Limited ☐ General
☐ Attorney in Fact
☐ Trustee
☐ Guardian or Conservator
☐ Other: _____

Signer Is Representing:

RIGHT THUMBPRINT OF SIGNER
Top of thumb here

© 2007 National Notary Association • 9350 De Soto Ave., P.O. Box 2402 • Chatsworth, CA 91313-2402 • www.NationalNotary.org Item #5907 Reorder: Call Toll-Free 1-800-876-6827

TRAVELERS

POWER OF ATTORNEY

Farmington Casualty Company
Fidelity and Guaranty Insurance Company
Fidelity and Guaranty Insurance Underwriters, Inc.
St. Paul Fire and Marine Insurance Company
St. Paul Guardian Insurance Company

St. Paul Mercury Insurance Company
Travelers Casualty and Surety Company
Travelers Casualty and Surety Company of America
United States Fidelity and Guaranty Company

Attorney-In Fact No. 224770

Certificate No. 005435735

KNOW ALL MEN BY THESE PRESENTS: That Farmington Casualty Company, St. Paul Fire and Marine Insurance Company, St. Paul Guardian Insurance Company, St. Paul Mercury Insurance Company, Travelers Casualty and Surety Company, Travelers Casualty and Surety Company of America, and United States Fidelity and Guaranty Company are corporations duly organized under the laws of the State of Connecticut, that Fidelity and Guaranty Insurance Company is a corporation duly organized under the laws of the State of Iowa, and that Fidelity and Guaranty Insurance Underwriters, Inc., is a corporation duly organized under the laws of the State of Wisconsin (herein collectively called the "Companies"), and that the Companies do hereby make, constitute and appoint

David K. Johnson, Monica A. Hutchison, Stephen D. Bender, and Edward D. Johnson

of the City of Roseville, State of California, their true and lawful Attorney(s)-in-Fact, each in their separate capacity if more than one is named above, to sign, execute, seal and acknowledge any and all bonds, recognizances, conditional undertakings and other writings obligatory in the nature thereof on behalf of the Companies in their business of guaranteeing the fidelity of persons, guaranteeing the performance of contracts and executing or guaranteeing bonds and undertakings required or permitted in any actions or proceedings allowed by law.

IN WITNESS WHEREOF, the Companies have caused this instrument to be signed and their corporate seals to be hereto affixed, this 3rd day of April, 2013.

Farmington Casualty Company
Fidelity and Guaranty Insurance Company
Fidelity and Guaranty Insurance Underwriters, Inc.
St. Paul Fire and Marine Insurance Company
St. Paul Guardian Insurance Company

St. Paul Mercury Insurance Company
Travelers Casualty and Surety Company
Travelers Casualty and Surety Company of America
United States Fidelity and Guaranty Company

State of Connecticut
City of Hartford ss.

By: _____
Robert L. Raney, Senior Vice President

On this the 3rd day of April, 2013, before me personally appeared Robert L. Raney, who acknowledged himself to be the Senior Vice President of Farmington Casualty Company, Fidelity and Guaranty Insurance Company, Fidelity and Guaranty Insurance Underwriters, Inc., St. Paul Fire and Marine Insurance Company, St. Paul Guardian Insurance Company, St. Paul Mercury Insurance Company, Travelers Casualty and Surety Company, Travelers Casualty and Surety Company of America, and United States Fidelity and Guaranty Company, and that he, as such, being authorized so to do, executed the foregoing instrument for the purposes therein contained by signing on behalf of the corporations by himself as a duly authorized officer.

In Witness Whereof, I hereunto set my hand and official seal.
My Commission expires the 30th day of June, 2016.

Marie C. Tetreault, Notary Public

58440-8-12 Printed in U.S.A.

WARNING: THIS POWER OF ATTORNEY IS INVALID WITHOUT THE RED BORDER

This Power of Attorney is granted under and by the authority of the following resolutions adopted by the Boards of Directors of Farmington Casualty Company, Fidelity and Guaranty Insurance Company, Fidelity and Guaranty Insurance Underwriters, Inc., St. Paul Fire and Marine Insurance Company, St. Paul Guardian Insurance Company, St. Paul Mercury Insurance Company, Travelers Casualty and Surety Company, Travelers Casualty and Surety Company of America, and United States Fidelity and Guaranty Company, which resolutions are now in full force and effect, reading as follows:

RESOLVED, that the Chairman, the President, any Vice Chairman, any Executive Vice President, any Senior Vice President, any Vice President, any Second Vice President, the Treasurer, any Assistant Treasurer, the Corporate Secretary or any Assistant Secretary may appoint Attorneys-in-Fact and Agents to act for and on behalf of the Company and may give such appointee such authority as his or her certificate of authority may prescribe to sign with the Company's name and seal with the Company's seal bonds, recognizances, contracts of indemnity, and other writings obligatory in the nature of a bond, recognizance, or conditional undertaking, and any of said officers or the Board of Directors at any time may remove any such appointee and revoke the power given him or her; and it is

FURTHER RESOLVED, that the Chairman, the President, any Vice Chairman, any Executive Vice President, any Senior Vice President or any Vice President may delegate all or any part of the foregoing authority to one or more officers or employees of this Company, provided that each such delegation is in writing and a copy thereof is filed in the office of the Secretary; and it is

FURTHER RESOLVED, that any bond, recognizance, contract of indemnity, or writing obligatory in the nature of a bond, recognizance, or conditional undertaking shall be valid and binding upon the Company when (a) signed by the President, any Vice Chairman, any Executive Vice President, any Senior Vice President or any Vice President, any Second Vice President, the Treasurer, any Assistant Treasurer, the Corporate Secretary or any Assistant Secretary and duly attested and sealed with the Company's seal by a Secretary or Assistant Secretary; or (b) duly executed (under seal, if required) by one or more Attorneys-in-Fact and Agents pursuant to the power prescribed in his or her certificate or their certificates of authority or by one or more Company officers pursuant to a written delegation of authority; and it is

FURTHER RESOLVED, that the signature of each of the following officers: President, any Executive Vice President, any Senior Vice President, any Vice President, any Assistant Vice President, any Secretary, any Assistant Secretary, and the seal of the Company may be affixed by facsimile to any Power of Attorney or to any certificate relating thereto appointing Resident Vice Presidents, Resident Assistant Secretaries or Attorneys-in-Fact for purposes only of executing and attesting bonds and undertakings and other writings obligatory in the nature thereof, and any such Power of Attorney or certificate bearing such facsimile signature or facsimile seal shall be valid and binding upon the Company and any such power so executed and certified by such facsimile signature and facsimile seal shall be valid and binding on the Company in the future with respect to any bond or understanding to which it is attached.

I, Kevin E. Hughes, the undersigned, Assistant Secretary, of Farmington Casualty Company, Fidelity and Guaranty Insurance Company, Fidelity and Guaranty Insurance Underwriters, Inc., St. Paul Fire and Marine Insurance Company, St. Paul Guardian Insurance Company, St. Paul Mercury Insurance Company, Travelers Casualty and Surety Company, Travelers Casualty and Surety Company of America, and United States Fidelity and Guaranty Company do hereby certify that the above and foregoing is a true and correct copy of the Power of Attorney executed by said Companies, which is in full force and effect and has not been revoked.

IN TESTIMONY WHEREOF, I have hereunto set my hand and affixed the seals of said Companies this 15th day of January, 20 14.

Kevin E. Hughes, Assistant Secretary

To verify the authenticity of this Power of Attorney, call 1-800-421-3880 or contact us at www.travelersbond.com. Please refer to the Attorney-In-Fact number, the above-named individuals and the details of the bond to which the power is attached.

WARNING: THIS POWER OF ATTORNEY IS INVALID WITHOUT THE RED BORDER

ABIDE-2 OP ID: DP

ACORD

CERTIFICATE OF LIABILITY INSURANCE

DATE (MM/DD/YYYY) 12/26/13

THIS CERTIFICATE IS ISSUED AS A MATTER OF INFORMATION ONLY AND CONFERS NO RIGHTS UPON THE CERTIFICATE HOLDER. THIS CERTIFICATE DOES NOT AFFIRMATIVELY OR NEGATIVELY AMEND, EXTEND OR ALTER THE COVERAGE AFFORDED BY THE POLICIES BELOW. THIS CERTIFICATE OF INSURANCE DOES NOT CONSTITUTE A CONTRACT BETWEEN THE ISSUING INSURER(S), AUTHORIZED REPRESENTATIVE OR PRODUCER, AND THE CERTIFICATE HOLDER.

IMPORTANT: If the certificate holder is an ADDITIONAL INSURED, the policy(ies) must be endorsed. If SUBROGATION IS WAIVED, subject to the terms and conditions of the policy, certain policies may require an endorsement. A statement on this certificate does not confer rights to the certificate holder in lieu of such endorsement(s).

PRODUCER
Warren G. Bender Co.
516 Gibson Drive Suite 240
Roseville, CA 95678
Edward Johnson

916-380-5300
916-380-5206

CONTACT NAME: Warren G Bender Co.
PHONE (A/C, No, Ext): 916-380-5300 FAX (A/C, No): 916-380-5206
E-MAIL ADDRESS: certs@wgbender.com

INSURER(S) AFFORDING COVERAGE	NAIC #
INSURER A: Mercury Insurance Group	27553
INSURER B: Ironshore Specialty Ins. Co.	25445
INSURER C: State Compensation Ins. Fund	
INSURER D: Torus National Insurance Compa	
INSURER E:	
INSURER F:	

INSURED
Abide Builders, Inc.
4992 Allison Parkway #A
Vacaville, CA 95688

COVERAGES CERTIFICATE NUMBER: REVISION NUMBER:

THIS IS TO CERTIFY THAT THE POLICIES OF INSURANCE LISTED BELOW HAVE BEEN ISSUED TO THE INSURED NAMED ABOVE FOR THE POLICY PERIOD INDICATED. NOTWITHSTANDING ANY REQUIREMENT, TERM OR CONDITION OF ANY CONTRACT OR OTHER DOCUMENT WITH RESPECT TO WHICH THIS CERTIFICATE MAY BE ISSUED OR MAY PERTAIN, THE INSURANCE AFFORDED BY THE POLICIES DESCRIBED HEREIN IS SUBJECT TO ALL THE TERMS, EXCLUSIONS AND CONDITIONS OF SUCH POLICIES. LIMITS SHOWN MAY HAVE BEEN REDUCED BY PAID CLAIMS.

INSR LTR	TYPE OF INSURANCE	ADDL INSR	SUBR WVD	POLICY NUMBER	POLICY EFF (MM/DD/YYYY)	POLICY EXP (MM/DD/YYYY)	LIMITS	
B	GENERAL LIABILITY X COMMERCIAL GENERAL LIABILITY CLAIMS-MADE X OCCUR GEN'L AGGREGATE LIMIT APPLIES PER: POLICY PRO-JECT LOC	X		AGS0037800	03/08/13	03/08/14	EACH OCCURRENCE	$ 1,000,000
							DAMAGE TO RENTED PREMISES (Ea occurrence)	$ 100,000
							MED EXP (Any one person)	$ 10,000
							PERSONAL & ADV INJURY	$ 1,000,000
							GENERAL AGGREGATE	$ 2,000,000
							PRODUCTS - COMP/OP AGG	$ 2,000,000
								$
A	AUTOMOBILE LIABILITY X ANY AUTO ALL OWNED AUTOS SCHEDULED AUTOS HIRED AUTOS NON-OWNED AUTOS	X		BA040000008693	08/21/13	08/21/14	COMBINED SINGLE LIMIT (Ea accident)	$ 1,000,000
							BODILY INJURY (Per person)	$
							BODILY INJURY (Per accident)	$
							PROPERTY DAMAGE (Per accident)	$
								$
D	UMBRELLA LIAB X OCCUR X EXCESS LIAB CLAIMS-MADE DED RETENTION $			74522G130ALI	05/16/13	03/08/14	EACH OCCURRENCE	$ 2,000,000
							AGGREGATE	$ 2,000,000
								$
C	WORKERS COMPENSATION AND EMPLOYERS' LIABILITY ANY PROPRIETOR/PARTNER/EXECUTIVE OFFICER/MEMBER EXCLUDED? (Mandatory in NH) Y/N If yes, describe under DESCRIPTION OF OPERATIONS below	N/A	X	692-508863-12	04/01/13	04/01/14	X WC STATU-TORY LIMITS OTH-ER	
							E.L. EACH ACCIDENT	$ 1,000,000
							E.L. DISEASE - EA EMPLOYEE	$ 1,000,000
							E.L. DISEASE - POLICY LIMIT	$ 1,000,000

DESCRIPTION OF OPERATIONS / LOCATIONS / VEHICLES (Attach ACORD 101, Additional Remarks Schedule, if more space is required)

Dogwood Park Development (L 19185000) / City of Sacramento, its officials, employees and volunteers are included as additional insured per the attached endorsement. AI, Auto AI, WC WOS to follow from carrier

CERTIFICATE HOLDER

CITYOSA

City of Sacramento
Contract Services Unit
915 I St, 2nd Flr
Sacramento, CA 95814

CANCELLATION

SHOULD ANY OF THE ABOVE DESCRIBED POLICIES BE CANCELLED BEFORE THE EXPIRATION DATE THEREOF, NOTICE WILL BE DELIVERED IN ACCORDANCE WITH THE POLICY PROVISIONS.

AUTHORIZED REPRESENTATIVE

Stephen D. Bender Ins.

© 1988-2010 ACORD CORPORATION. All rights reserved.

ACORD 25 (2010/05) The ACORD name and logo are registered marks of ACORD

POLICY NUMBER: 184188A

FPIC 0200 (12-11)

THIS ENDORSEMENT CHANGES THE POLICY. PLEASE READ IT CAREFULLY

BUSINESS AUTO ELITE COVERAGE ENDORSEMENT

This endorsement modifies insurance provided under the following:

BUSINESS AUTO COVERAGE FORM

With respect to coverage provided by this endorsement, the provisions of the Coverage Form apply unless modified by this endorsement.

SECTION II - LIABILITY COVERAGE - Amendments

WHO IS AN INSURED
The following are added to WHO IS AN INSURED:

BLANKET ADDITIONAL INSUREDS
Any person or organization with whom you agreed, pursuant to a written contract, to provide insurance such as is afforded under this Coverage Part, but only to the extent that the person or organization is held liable for your acts or omissions with respect to your ownership, maintenance or use of a covered "auto." This provision only applies if the written contract has been executed prior to the "bodily injury" or "property damage."

This coverage shall be primary and not contributory with respect to the person or organization included as an "insured" under this section. Any other insurance that person or organization has shall be excess and not contributory with respect to this insurance, but this provision only applies if it is required in the written contract, identified in this section, and is permitted by law.

BROAD FORM NAMED INSURED
Any business entity newly acquired or formed by you, other than a partnership, joint venture or limited liability company during the policy period provided you own 50% or more of the business entity and the business entity is not separately insured for Business Auto Coverage. Coverage is extended up to a maximum of 180 days following acquisition or formation of the business entity.

EMPLOYEES AS INSURED - HIRED AUTOS
Any "employee" of yours is an "insured" while operating an "auto" hired or rented under a contract or agreement in that "employee's" name, with your permission, while performing duties related to the conduct of your business.

EMPLOYEES AS INSURED - NONOWNED AUTOS
Any "employee" of yours is an "insured" while using a covered "auto" you don't own, hire or borrow in your business.

COVERAGE EXTENSIONS - SUPPLEMENTARY PAYMENTS
Supplementary Payments is amended as follows:

We will pay up to $3,000 for cost of bail bonds (including bonds for related traffic law violations) required because of an "accident" we cover. We do not have to furnish these bonds.

We will pay all reasonable expenses incurred by the "insured" at our request, including actual loss of earnings up to $300 a day, because of time off from work.

SECTION III - PHYSICAL DAMAGE COVERAGE - Amendments

AUDIO, VISUAL, AND DATA ELECTRONIC EQUIPMENT COVERAGE EXTENSION
Any reference to equipment for the reproduction of sound also includes video and global positioning systems.

EXPANDED TOWING COVERAGE
In addition to the towing and labor limit shown in the Declarations for private passenger type "autos," we will pay up to $75 for towing and labor costs incurred each time the covered "auto" is disabled. However, the labor must be performed at the place of disablement.

This coverage applies only to an "auto" covered on this policy for other physical damage coverage.

EXPANDED TRANSPORTATION EXPENSE
Coverage Extensions - Transportation Expenses is deleted and replaced by the following:

We will pay up to $60 per day to a maximum of $1,800 for temporary transportation expense incurred by you because of the total theft of a covered "auto" of the private passenger type. We will pay only for those covered "autos" for which you carry either Comprehensive or Specified Causes of Loss Coverage. We will pay for temporary transportation expenses incurred during the period beginning 48 hours after the theft and ending, regardless of the policy's expiration, when the covered "auto" is returned to use or we pay for its "loss."

Includes copyrighted material of ISO Properties, Inc. with its permission

EXTRA EXPENSE - STOLEN AUTOS

We will pay up to $1,000 for the expense of returning a stolen covered "auto" to you. We will pay only for those covered "autos" for which you carry Comprehensive or Specified Causes of Loss Coverage.

HIRED CAR PHYSICAL DAMAGE COVERAGE

For purposes of this section, the term "auto" is redefined to mean a land motor vehicle, "trailer" or semitrailer with a gross vehicle weight under 20,000 pounds designed for travel on public roads, but does not include "mobile equipment."

If Comprehensive, Specified Causes of Loss or Collision coverage is provided to all owned autos by this policy, you may extend that coverage to apply to Physical Damage "loss" to hired "autos." We will provide coverage equal to the minimum coverage available to any covered "auto" shown in the Declarations. But, the most we will pay for "loss" to a hired "auto" in any one "accident" is the lesser of:

1. $50,000; or

2. The actual cash value of the damaged or stolen property as of the time of the "loss;" or

3. The actual cost of repairing or replacing the damaged or stolen property with other property of like kind or quality. A part is of like kind and quality when it is of equal or better condition than the pre-accident part. We will use the original equipment from the manufacturer when:

   a) The operational safety of the vehicle might otherwise be impaired;

   b) Reasonable and diligent efforts to locate the appropriate rebuilt, aftermarket or used part have been unsuccessful;

   c) A new original equipment part of like kind and quality is available and will result in the lowest overall repair cost;

   d) For vehicles insured under policies written on or before December 31, 2003, the vehicle has been used no more than 15,000 miles unless the pre-accident condition warrants otherwise; or

   e) For vehicles insured under policies written on or after January 1, 2004, the vehicle has been used no more than 20,000 miles unless the pre-accident condition warrants otherwise.

For each hired "auto" our obligation to pay "loss" will be reduced by a deductible equal to the highest deductible applicable to any owned "auto" for that coverage. No deductible will be applied to "loss" caused by fire or lightning. We will also pay up to $500 per "accident" for loss of use of the hired "auto" if it results from an "accident" for which you are legally liable. The lessor must suffer an actual financial "loss" for this coverage to apply.

Hired Car Physical Damage Coverage provided by this extension is excess over any other collectible insurance.

LOAN/LEASE GAP COVERAGE

For purposes of this section, the term "auto" is redefined to mean a land motor vehicle, "trailer" or semitrailer with a gross vehicle weight under 20,000 pounds designed for travel on public roads, but does not include "mobile equipment."

If a long-term leased or financed "auto" is a covered "auto" for the Physical Damage Coverage applicable to a total "loss," and the lessor or financial institution is an additional insured under this Coverage Part, we will pay up to a maximum of $15,000 the difference between amounts you owe the lessor or financial institution under the lease or loan terms and the amount of insurance paid the lessor or financial institution for the total "loss" of the covered "auto" minus: any payments overdue at the time of the loss; any financial penalties imposed due to wear and tear, high mileage or similar charges; any security deposits not refunded by the lessor or financial institution; any costs for credit life, health and accident, or disability insurance; any costs for extended warranties; or any carry-over balances from previous leases or loans. You are responsible for the deductible applicable to the "loss" for the covered "auto". This coverage is excess insurance over any other collectible insurance or lease provision.

PERSONAL EFFECTS COVERAGE

We will pay up to $400 for "loss" to wearing apparel and other personal effects which are:

1. Owned by an "insured;" and

2. In or on your covered "auto;"

in the event of a total theft "loss" of your covered "auto."

No deductibles apply to Personal Effects Coverage.

RENTAL REIMBURSEMENT COVERAGE

1. We will pay for rental reimbursement expenses incurred by you for the rental of an "auto" because of "loss" to a covered "auto." Payment applies in addition to the otherwise applicable amount of each coverage you have on a covered "auto." No deductibles apply to Rental Reimbursement Coverage.

Includes copyrighted material of ISO Properties, Inc. with its permission

2. We will pay only for those expenses incurred during the policy period beginning 24 hours after the "loss" and ending, regardless of the policy's expiration, with the lesser of the following number of days:

   a) The number of days reasonably required to repair or replace the covered "auto." If "loss" is caused by theft, this number of days is added to the number of days it takes to locate the covered "auto" and return it to you.

   b) The number of days shown in the Schedule.

3. This coverage applies only to a covered "auto" for which there is Comprehensive, Specified Causes of Loss or Collision Coverage provided on this covered "auto." If there is no Collision Coverage for a covered "auto," then Rental Reimbursement Coverage will not apply to a Collision loss involving that covered "auto."

4. Our payment is limited to the lesser of the following amounts:

   a) Necessary and actual expenses incurred.

   b) $75 for any one day or for a maximum of 30 days.

5. This coverage does not apply while there are spare or reserve "autos" available to you for your operations.

6. If "loss" results from the total theft of a covered "auto" of the private passenger type, we will pay under this coverage only that amount of your rental reimbursement expenses which is not already provided for under the PHYSICAL DAMAGE COVERAGE Coverage Extension.

7. Coverage does not apply to any covered "auto" for which coverage is provided by endorsement form CA 9923 on this policy.

WAIVER OF DEDUCTIBLE - GLASS
Deductible is amended by adding the following:

No deductible for a covered "auto" will apply to glass damage if the glass is repaired rather than replaced.

SECTION IV - BUSINESS AUTO CONDITIONS - Amendments

LOSS CONDITIONS

KNOWLEDGE OF ACCIDENT, CLAIM, SUIT OR LOSS
The requirements for reporting and sending claim or "suit" information to us, including provisions related to the subsequent investigation of such claims or "suits", under DUTIES IN THE EVENT OF ACCIDENT, CLAIM, SUIT OR LOSS, do not apply until the "accident" or "loss" is known to:

1. You, if you are an individual;

2. A partner, if you are a partnership;

3. An executive officer or insurance manager, if you are a corporation;

4. Your members, managers or insurance manager, if you are a limited liability company;

5. Your elected or appointed officials, trustees, board members, or your insurance manager, if you are an organization other than a partnership, joint venture, or limited liability company.

But, this section does not amend the provisions relating to notification of police, protection or examination of the property which was subject to the "loss."

BLANKET WAIVER OF SUBROGATION
Transfer Of Rights Of Recovery Against Others To Us is deleted and replaced by the following:

We waive any right of recovery we may have against any person or organization to the extent required of you by a written contract executed prior to any "accident" or "loss," provided that the "accident" or "loss" arises out of the operations contemplated by such contract. The waiver applies only to the person or organization designated in such contract.

GENERAL CONDITIONS

UNINTENTIONAL ERRORS OR OMISSIONS
Concealment, Misrepresentation Or Fraud is amended by adding the following:

The unintentional omission of, or unintentional error in, any information given by you shall not prejudice your rights under this insurance. However, this provision does not affect our right to collect additional premium or exercise our right of cancellation or non-renewal.

SECTION V - DEFINITIONS - Amendment

MENTAL ANGUISH
The definition of "bodily injury" is amended to include mental anguish resulting from any "bodily injury," sickness or disease sustained by a person.

Includes copyrighted material of ISO Properties, Inc. with its permission

POLICY NUMBER: AGS0037800

COMMERCIAL GENERAL LIABILITY
CG 20 10 07 04

THIS ENDORSEMENT CHANGES THE POLICY. PLEASE READ IT CAREFULLY.

ADDITIONAL INSURED – OWNERS, LESSEES OR CONTRACTORS – SCHEDULED PERSON OR ORGANIZATION

This endorsement modifies insurance provided under the following:

COMMERCIAL GENERAL LIABILITY COVERAGE PART

SCHEDULE

Name Of Additional Insured Person(s) Or Organization(s):	Location(s) Of Covered Operations
As required by written contract. If required by your agreement with such Additional Insured, this insurance shall be primary insurance and non-contributory for that Additional Insured. If anyone, other than the Additional Insured, provides similar insurance for the Additional Insured, then this insurance will apply as outlined in SECTION IV-COMMERCIAL GENERAL LIABILITY CONDITIONS, paragraph 4, Other Insurance, subparagraph c., Method of Sharing. The inclusion of one or more Insured(s) under the terms of this endorsement does not increase our limits of liability.	
Information required to complete this Schedule, if not shown above, will be shown in the Declarations.	

A. Section II – Who Is An Insured is amended to include as an additional insured the person(s) or organization(s) shown in the Schedule, but only with respect to liability for "bodily injury", "property damage" or "personal and advertising injury" caused, in whole or in part, by:

1. Your acts or omissions; or
2. The acts or omissions of those acting on your behalf;

in the performance of your ongoing operations for the additional insured(s) at the location(s) designated above.

B. With respect to the insurance afforded to these additional insureds, the following additional exclusions apply:

This insurance does not apply to "bodily injury" or "property damage" occurring after:

1. All work, including materials, parts or equipment furnished in connection with such work, on the project (other than service, maintenance or repairs) to be performed by or on behalf of the additional insured(s) at the location of the covered operations has been completed; or
2. That portion of "your work" out of which the injury or damage arises has been put to its intended use by any person or organization other than another contractor or subcontractor engaged in performing operations for a principal as a part of the same project.

© ISO Properties, Inc., 2004

POLICY NUMBER: AGS0037800

COMMERCIAL GENERAL LIABILITY
CG 20 37 07 04

THIS ENDORSEMENT CHANGES THE POLICY. PLEASE READ IT CAREFULLY.

ADDITIONAL INSURED – OWNERS, LESSEES OR CONTRACTORS – COMPLETED OPERATIONS

This endorsement modifies insurance provided under the following:

COMMERCIAL GENERAL LIABILITY COVERAGE PART

SCHEDULE

Name Of Additional Insured Person(s) Or Organization(s):	Location And Description Of Completed Operations
Blanket as required by written contract and effective during the policy period as stated on the policy declarations.	**Blanket as required by contract.** **Primary Insurance: It is agreed that such insurance as is afforded by this policy for the benefit of the additional insured shown shall be primary insurance, and any other insurance maintained by the additional insured(s) shall be excess and non contributory as respects any claim, loss or liability allegedly arising out of the operations of the named insured, provided however that this insurance will not apply to any claim, loss or liability determined to arise or result from the additional insured's sole negligence or willful misconduct.** **The insurance afforded by this policy for the benefit of the additional insured does not apply to 'property damage' to any building, structure or appurtenant structure intended to be occupied as a 'private residence'. The term "private residence" includes single family homes or residences, multi-family homes or residences, condominiums, townhomes.**

Section II – Who Is An Insured is amended to include as an additional insured the person(s) or organization(s) shown in the Schedule, but only with respect to liability for "bodily injury" or "property damage" caused, in whole or in part, by "your work" at the location designated and described in the schedule of this endorsement performed for that additional insured and included in the "products-completed operations hazard".

© ISO Properties, Inc., 2004

WORKER'S COMPENSATION CERTIFICATION

In accordance with Article 5 (commencing at Section 1860), Chapter 1, Part 7, Division 2 of the Labor Code, the below certificate must be signed and filed with the awarding body prior to performing any work under this contract. Labor Code Section 3700, inter alia, states the following:

"Every employer shall secure the payment of compensation in one or more of the following ways:

"(a) By being insured against liability to pay compensation in one or more insurers duly authorized to write compensation insurance in this State.

"(b) By securing from the Director of Industrial Relations a certificate of consent to self-insure, which may be given upon furnishing proof satisfactory to the Director of Industrial Relations of ability to self-insure and to pay any compensation that may become due to his employees.

To be signed by authorized corporate officer or partner or individual submitting the Proposal. If Bidder is: (example)

1. An individual using a firm name, sign: "John Doe, an individual doing business as Blank Company."
2. An individual doing business under his own name, Sign: your name only.
3. A co-partnership, sign: "John Doe and Richard Doe, co-partners doing business as Blank Company, by, John Doe, co-partner.
4. A corporation, sign: "Blank Company, by John Doe, Secretary." (or other title)

I am aware of the provisions of Section 3700 of the Labor Code which require every employer to be insured against liability for worker's compensation or to undertake self-insurance in accordance with the provisions of that code, and I will comply with such provisions before commencing the performance of the work of this contract.

DATE: 1/15/14

Contractor Ab. le Bulden

By [signature]
Signature

c:\users\jeff lovitt\appdata\local\microsoft\windows\temporary internet files\content.outlook\56j1peju\26-workers comp cert.docx

PAY REQUEST APPLICATION

PROJECT NAME AND NUMBER: DOGWOOD PARK DEVELOPMENT (L19185000)

CONTRACTOR: _____

PURCHASE ORDER NO. (Required): _____ **COST CENTER:** (L19185000)

INVOICE NO.: _____ **PERIOD ENDING DATE:** _____

SUBMITTAL OF A PROGRESS SCHEDULE IS REQUIRED TO BE SUBMITTED WITH THIS PAY REQUEST IN ACCORDANCE WITH CITY'S STANDARD SPECS; NO PROGRESS PAYMENTS WILL BE MADE FOR ANY WORK UNTIL SATISFACTORY SCHEDULE HAS BEEN SUBMITTED TO THE ENGINEER.

ORIG. CONTRACT AMT.		$_____
CHANGE ORDER NO. 1	$_____	
CHANGE ORDER NO. 2	$_____	
CHANGE ORDER NO. 3	$_____	
CHANGE ORDER NO. 4	$_____	
NET CHANGE BY CHANGE ORDERS:	$_____	
TOT ADJUSTED CONTRACT AMT TO DATE:		$_____
BALANCE OF CONTRACT TO FINISH:	$_____	
TOTAL COMPLETE AND STORED TO DATE:		$_____
LESS 5% RETENTION	$_____	
LESS PREVIOUS BILLINGS:	$_____	
AMOUNT DUE THIS INVOICE:		$_____

******Labor Compliance (payrolls etc.) is current and submitted for this Pay Request******

Submitted By _____ **Date:** _____

Submit To: **Department of Parks & Recreation**
915 I Street, 3rd Floor
Sacramento, CA 95814
Attn.: Dennis Day, Project Manager/ Kirsten Wise, Labor Compliance Officer

Approved By (Const. Insp.) _____ **Date:** _____

Approved By (Project Manager) _____ **Date:** _____

Approved By (Labor Compliance) _____ **Date:** _____

In accordance with Public Contract Code §20104.50 the City shall pay Contractor interest on any progress payment which is made by City more than 30 days after City receives an undisputed and properly submitted written payment request. Said interest shall be equal to the rate set forth in CCP§685.010(a), and shall begin to accrue upon the expiration of said 30 day period. Any written request for a progress payment which City determines to be disputed, improper or not suitable for payment for any reason shall be returned to Contractor within 7 days after receipt by City, along with a written statement of the reason or reasons why such request is disputed, improper or not suitable for payment.
(Rev. 9/17/04)

CITY OF SACRAMENTO
Department of Parks and Recreation
Park Planning & Development Services

SCHEDULE OF VALUES

Remit To:

Department of Parks and Recreation
Park Planning & Development Services
915 I Street, 3rd Floor
Sacramento, CA 95814

PROJECT NAME: DOGWOOD PARK DEVELOPMENT

CITY PROJ. NO: L19185000

CONTRACTOR: ABIDE BUILDERS, INC.

FUNDING:
472011-5000-3704-2013-L19185000-401

ADDRESS: 4992 ALLISON PARKWAY, SUITE A
VACAVILLE, CA 95688

PHONE NO: 1-707-447-1778

Payment No. _____
Work Performed Thru _____
Date Payment Submitted _____
Days Expended on Contract _____

Item No.	Item Description	Estimated Quantity	Unit	Unit Price	Authorized Amount	This Estimate		Total Work Completed		Quantity Remaining
						Quantity	$ Amount	Quantity	$ Amount	
	ITEMS OF THE BASE BID:									
1	Clearing and Grubbing	1	LS	$1,500.00	$1,500.00					
2	Temporary Construction Fence to Install	1	LS	$2,500.00	$2,500.00					
3	Erosion and Sediment Control	1	LS	$6,000.00	$6,000.00					
4	Construction Staking	1	LS	$6,000.00	$6,000.00					
5	Site Grading	1	LS	$16,000.00	$16,000.00					
6	Catch Basin to Construct	4	EA	$800.00	$3,200.00					
7	Play Area Catch Basin to Construct	1	EA	$700.00	$700.00					
8	6" PVC Drain Pipe to Place	1	LS	$6,000.00	$6,000.00					
9	8" PVC Drain Pipe to Place	1	EA	$4,500.00	$4,500.00					
10	Standard Manhole No. 3 to Construct	1	LS	$2,000.00	$2,000.00					
11	Storm Drain Cleanout to Construct	1	LS	$250.00	$250.00					
12	2" Domestic Water Meter, Backflow Preventer and Enclosure	1	LS	$3,500.00	$3,500.00					
13	Domestic Water Line	1	LS	$2,500.00	$2,500.00					
14	Drinking Fountain to Install	1	LS	$5,000.00	$5,000.00					
15	Aggregate Base to Place	1	LS	$20,000.00	$20,000.00					
16	Basketball Court Pavement to Place	1	LS	$18,000.00	$18,000.00					
17	4" Concrete Flatwork to Construct	1	LS	$22,000.00	$22,000.00					
18	5" Concrete Flatwork to Construct	1	LS	$35,000.00	$35,000.00					

Remit To:

Department of Parks and Recreation
Park Planning & Development Services
915 I Street, 3rd Floor
Sacramento, CA 95814

CITY OF SACRAMENTO
Department of Parks and Recreation
Park Planning & Development Services

SCHEDULE OF VALUES

PROJECT NAME: DOGWOOD PARK DEVELOPMENT

CITY PROJ. NO: L19185000

CONTRACTOR: ABIDE BUILDERS, INC.

FUNDING:
472011-5000-3704-2013-L19185000-401

ADDRESS: 4992 ALLISON PARKWAY, SUITE A
VACAVILLE, CA 95688

PHONE NO: 1-707-447-1778

Payment No. _____
Work Performed Thru _____
Date Payment Submitted _____
Days Expended on Contract _____

Item No.	Item Description	Estimated Quantity	Unit	Unit Price	Authorized Amount	This Estimate		Total Work Completed		Quantity Remaining
						Quantity	$ Amount	Quantity	$ Amount	
19	Exposed Aggregate Paving with Glass Beans to Construct	1	LS	$12,000.00	$12,000.00					
20	6" Play Area Curb to Construct	1	LS	$8,000.00	$8,000.00					
21	9" Concrete Mow Strip to Construct	1	LS	$7,000.00	$7,000.00					
22	Stabilized Decomposed Granite Pavement to Place	1	LS	$2,500.00	$2,500.00					
23	Landscape Boulders to Place	1	LS	$2,700.00	$2,700.00					
24	Basketball Posts and Backboards to Install	1	LS	$9,000.00	$9,000.00					
25	Horseshoe Court Equipment to Install	1	LS	$7,000.00	$7,000.00					
26	Play Structure to Install	1	LS	$110,000.00	$110,000.00					
27	Swings and Independent Play Items to Install	1	LS	$35,000.00	$35,000.00					
28	Concrete Play Items to Install	1	LS	$55,000.00	$55,000.00					
29	Tike Track Signs and Equipment	1	LS	$1,200.00	$1,200.00					
30	Painted Striping and Pavement Markings	1	LS	$1,200.00	$1,200.00					
31	Rubber Mat Under Swing to Install	1	EA	$2,000.00	$2,000.00					
32	Play Area Wood Fiber to Place	1	EA	$26,000.00	$26,000.00					
33	Poured-in-Place Rubber Surfacing	1	LS	$20,000.00	$20,000.00					
34	Bench with Back to Install	4	EA	$2,000.00	$8,000.00					
35	Bench without Back to Install	2	EA	$4,000.00	$8,000.00					
36	Picnic Table to Install	9	EA	$2,000.00	$18,000.00					

Remit To:

Department of Parks and Recreation
Park Planning & Development Services
915 I Street, 3rd Floor
Sacramento, CA 95814

CITY OF SACRAMENTO
Department of Parks and Recreation
Park Planning & Development Services

SCHEDULE OF VALUES

PROJECT NAME: DOGWOOD PARK DEVELOPMENT

CITY PROJ. NO: L19185000

CONTRACTOR: ABIDE BUILDERS, INC.

FUNDING:
472011-5000-3704-2013-L19185000-401

ADDRESS: 4992 ALLISON PARKWAY, SUITE A
VACAVILLE, CA 95688

PHONE NO: 1-707-447-1778

Payment No. _____
Work Performed Thru _____
Date Payment Submitted _____
Days Expended on Contract _____

Item No.	Item Description	Estimated Quantity	Unit	Unit Price	Authorized Amount	This Estimate		Total Work Completed		Quantity Remaining
						Quantity	$ Amount	Quantity	$ Amount	
37	Trash Receptacles to Install	3	EA	$2,000.00	$6,000.00					
38	Group Grill to Install	1	EA	$1,500.00	$1,500.00					
39	Park Rule Signs to Install	3	EA	$200.00	$600.00					
40	Concrete Park Sign to Install	1	LS	$5,000.00	$5,000.00					
41	Electrical System to Install	1	LS	$16,000.00	$16,000.00					
42	2" Irrigation Water Meter, Backflow Preventer and Enclosure	1	LS	$2,500.00	$2,500.00					
43	Automatic Irrigation System	1	LS	$92,500.00	$92,500.00					
44	Central Irrigation Controller	1	LS	$16,000.00	$16,000.00					
45	Booster Pump Assembly	1	LS	$19,000.00	$19,000.00					
46	Trees to Plant (15 gal)	1	LS	$4,000.00	$4,000.00					
47	Trees to Plant (24" Box)	1	LS	$21,000.00	$21,000.00					
48	Shrub and Groundcover Areas to Plant	1	LS	$28,000.00	$28,000.00					
49	Landscape Weed Fabric to Install	1	LS	$6,500.00	$6,500.00					
50	Bark Mulch to Install	1	LS	$16,000.00	$16,000.00					
51	Turf Hydroseed to Place	1	LS	$33,510.00	$33,510.00					
52	Plant Establishment (90 day)	1	LS	$9,000.00	$9,000.00					
	ADDITIVE ALTERNATE BID ITEMS:									
A1	Metal Shade Structure to Install	1	LS	$49,000.00	$49,000.00					

CITY OF SACRAMENTO
Department of Parks and Recreation
Park Planning & Development Services

SCHEDULE OF VALUES

Remit To:

Department of Parks and Recreation
Park Planning & Development Services
915 I Street, 3rd Floor
Sacramento, CA 95814

PROJECT NAME: DOGWOOD PARK DEVELOPMENT

CITY PROJ. NO: L19185000

CONTRACTOR: ABIDE BUILDERS, INC.

FUNDING:
472011-5000-3704-2013-L19185000-401

ADDRESS: 4992 ALLISON PARKWAY, SUITE A
VACAVILLE, CA 95688

PHONE NO: 1-707-447-1778

Payment No. _____
Work Performed Thru _____
Date Payment Submitted _____
Days Expended on Contract _____

Item No.	Item Description	Estimated Quantity	Unit	Unit Price	Authorized Amount	This Estimate		Total Work Completed		Quantity Remaining
						Quantity	$ Amount	Quantity	$ Amount	
A2	Fabric Shade Canopy to Install	1	LS	$23,000.00	$23,000.00					
A3	Turf Sod to Install	1	LS	not awarding	$0.00					
	CONTRACT TOTAL				**$836,360.00**					
	CHANGE ORDERS									
1		1	LS							
2		1	LS							
3		1	LS							
4		1	LS							
5		1	LS							
	TOTAL CHANGE ORDER AMOUNT				**$0.00**					
	TOTAL AMENDED CONTRACT AMOUNT				**$836,360.00**					

GUARANTEE

We hereby guarantee the: **DOGWOOD PARK DEVELOPMENT (L19185000)**

City of Sacramento for one (1) year in accordance with the guarantee required in the specifications. We agree to repair or replace any or all such work, together with all or any other work which may be displaced in so doing, that may be proven defective in workmanship or material within the one-year period from the date of acceptance without any expense whatsoever to the City, ordinary wear and tear and unusual abuse or neglect excepted.

In the event of our failure to comply with the above-mentioned conditions within five (5) days time after being notified in writing, we collectively or separately, do hereby authorize the City to proceed to have the defects repaired and made good at our expense and will pay the costs and damages, including but not limited to any related attorney fees and City staff and administrative expenses, therefor immediately upon demand.

Dated: 1-15-14

Signed: [signature]

JEFF LOVITT
Printed Name

ABIDE BUILDERS
Company

825 RIVERSIDE PKWY 180
Address

WEST SACRAMENTO CA
95605

SPECIAL PROVISIONS

SPECIAL PROVISIONS FOR DOGWOOD PARK DEVELOPMENT

(L19185000)

I. GENERAL REQUIREMENTS

A. SCOPE AND LOCATION OF WORK

The work to be performed under these Special Provisions consists of developing Dogwood Park in North Natomas, Sacramento. The improvements will consist of clearing and grubbing, grading and drainage, concrete walkways and curbs, children's playground with tike track, poured-in-place rubber surfacing, two half basketball courts, two horseshoe court, open turf area, group picnic area, automatic irrigation system with central control, landscaping, electrical, park signage, park name sign, site furniture, metal shade shelter, and fabric shade canopy.

B. COMPLETION TIME

The time for the completion of all work is Eighty (80) Working Days from the Notice to Proceed for substantial completion and 90 (Ninety Calendar Days) for plant establishment. Should said work not be completed to the satisfaction of the City within said time, the contractor shall pay to the City of Sacramento a sum of ONE THOUSAND DOLLARS ($1,000.00) as liquidated damages and not as a penalty for each calendar day delay after the expiration of such period until the final acceptance of the work by the City and its delivery to the City.

The Notice to Proceed for this project will be issued on March 24, 2014 with the intent that Construction operations will begin no later than April 14, 2014.

C. SPECIFICATIONS

The work to be performed under this contract shall be done in accordance with the Standard Specifications of the City of Sacramento, adopted June 2007, referred to herein as "Standard Specifications" as modified by these Special Provisions, which shall apply to all work.

i. Standard Specification 1-23 Engineer shall also mean Landscape Architect as defined in Standard Specification Section 1-33.

ii. Standard Specifications Section 2-9 SUBCONTRACTORS; add the following after the sub paragraph 2 of the first paragraph in the Standard Specifications.

If a prime Contractor fails to specify a subcontractor, or, if a prime Contractor specifies more than one (1) subcontractor for the same portion of work to be performed under the Contract which portion exceeds one-half

of one percent of the prime Contractor's total bid, the prime Contractor agrees that he or she is fully qualified to perform that portion himself or herself, and that the prime Contractor shall perform that portion himself or herself.

iii. Standard Specifications Section 5-4 COOPERATION OF CONTRACTOR

Add the following after the last paragraph of the Standard Specifications Section 5-4 COOPERATION OF CONTRACTOR with the following:

Contractor shall cooperate with the Landscape Architect, inspectors, and with other Contractors in every way possible. The Inspectors shall designate sequence of construction in case of controversy between Contractors.

iv. Standard Specifications Section 8 MEASUREMENT OF QUANTITIES

Delete the paragraph following Section heading 8-1 and replace it with the following: "The City shall determine quantities of work acceptable under the terms of the contract. Not more than once per month the Contractor shall present to the City a statement showing the amount of labor and materials incorporated into the work."

v. Special Notice Regarding Standard Specifications: The Standard Specifications of the City of Sacramento, dated June 2007, are subject to the provisions of Title 3 of the Sacramento City Code. If there is any conflict between the Standard Specifications as currently written and Title 3 of the Sacramento City Code, the latter shall govern.

vi. Standard Specifications Section 7 PROSECUTION AND PROGRESS. Add the following after the last paragraph of the Standard Specifications. Section 7-2 WORK SCHEDULE AND ADEQUATE RESOURCES. Contractor shall submit with each Pay Request Application an updated Work Schedule. The updated Work Schedule is an integral part of the Pay Request Application. The Pay Request Application will not be accepted for processing without an accompanying updated Work Schedule.

Special Notice Regarding Standard Specifications: The Standard Specifications of the City of Sacramento, dated June 2007, are now subject to the provisions of Title 3 of the Sacramento City Code. If there is any conflict between the Standard Specifications as currently written and Title 3 of the Sacramento City Code, the latter shall govern.

D. SUBCONTRACTORS

The Contractor shall comply with Section 2-9 of the Standard Specifications.

E. SCHEDULE OF UNIT PRICES

The successful lowest responsible bidder shall provide a Schedule of Unit Prices to the Landscape Architect prior to the award of the contract. The form for the Schedule of Unit Prices will be provided to the successful lowest responsible bidder by the Landscape Architect. This schedule of unit prices shall be not be used for payment. Unit prices provided on the schedule of unit prices are for information only and may be used as a basis for determining costs in changes in the work.

F. TIME OF AWARD

Section 3-2, "Time of Award: of the Standard Specifications is hereby amended for this project. Time of Award for this contract shall be made within ninety (90) calendar days after opening of the proposals to the lowest responsible bidder, unless otherwise stated in the contract agreement.

G. PRE-BID INTERPRETATION OF CONTRACT DOCUMENTS

No oral representations or interpretation will be made to any bidder as to the meaning of the contract documents. Request for interpretation shall be made in writing, and delivered to the City at least seven (7) days before the time announced for opening the proposals. Interpretation, where necessary, will be made by the City in the form of an addendum to the contract documents, and when issued, will be sent as promptly as is practical to all parties to whom the bid documents have been issued. All such addenda shall become part of the contract. Request for information regarding this procedure or other similar information, shall be directed to Dennis Day, Department of Parks and Recreation, Park Planning & Development Services, 915 I Street, 3rd Floor, Sacramento, CA 95814, (916) *808-7633*, FAX (916) 808-8266.

It shall also be the bidder's responsibility to call to the attention of the Landscape Architect any missing pages or drawings in the contract documents including the addenda. These items shall be brought to the attention of the Landscape Architect at least seven (7) calendar days before the bid opening date.

H. PRE-JOB CONFERENCE AND CONSTRUCTION SCHEDULE

The Contractor, after delivery of the contract and at least three (3) calendar days before beginning work, shall notify the Park Construction Inspector and arrange a pre-job conference. The Contractor shall submit to the Park Construction Inspector construction progress schedules in accordance with Section 7-2 of the Standard Specifications.

I. WORKMANSHIP AND MATERIALS

Except as otherwise specified, all materials and equipment incorporated in the work under the contract shall be new. The quality of materials and

workmanship shall be in accordance with the provisions of Section 5-17 of the Standard Specifications. Appearance of the finished work is of primary importance in all phases of this project. Any portion of the work may be rejected due to appearance.

J. TRADE NAMES AND ALTERNATIVES

In accordance with Paragraph 5-18 of the Standard Specifications of the City of Sacramento, certain articles or materials to be incorporated in the work may be designated, for convenience, under a trade name or the name of a manufacturer and his catalogue information. The use of an alternative article or material which is of equal quality and of the required characteristics for the purpose intended will be permitted, subject to the approval of the Landscape Architect. The Contractor shall, within **seven (7) calendar days** after the **Bid Summary and Notification of Award Recommendation**, submit for the review of the Landscape Architect, materials, products, equipment and services which differ in any respect from the materials, products, equipment and services specified. Such submittals shall be accompanied by data to substantiate that such items are equal to those specified. The Landscape Architect shall be the sole judge as to the quality and suitability of substitutions and his/her decision is final. Requests for substitutions will not be entertained or considered by the Landscape Architect during the bidding period. No delay or extension of the contract time will be allowed because of the time required for submitting substitutions or for determining their equality. Failure to propose the substitution of any article or service within **seven (7) calendar days** after the **Bid Summary and Notification of Award Recommendation** will be deemed sufficient cause for the denial of request for substitution.

After an approval for a substitution is given, the Contractor shall be responsible for any variation of dimensions, locations, connections, sizes and openings, type and construction of substrate or support to receive materials, etc. The Contractor shall furnish and install any and all additional materials as may be required to perform a complete job without additional cost to the City.

Request for approval shall, in addition to following the directions described above, list any and all deviations in the quality, criteria, characteristics or dimensions from the specified item or items. Any deviations in the quality, criteria, characteristics or dimensions that do not appear in the request for approval and subsequently appear in the shop drawings or in the product or installation, may cause the Contractor to be directed to remove the item or items in total and at his expense, and to provide and install the item or items as originally specified. The mere mention in the request for approval that the item or items will be in accord with the manufacturer's specification or catalog will not be sufficient to alter the specifications unless approval is given to requests, which specifically list in the requesting letter where deviations in the quality, criteria, characteristics or dimensions exist.

K. ACCIDENT PREVENTION

The Contractor's attention is directed to Section 6-9 of the Standard Specifications,

which requires compliance with all requirements of the California Occupational Safety and Health Act.

L. LOCATION OF EQUIPMENT AND PIPING

Drawings showing locations of equipment, piping, valves, sprinkler heads, and other appurtenances are diagrammatic only. When installation deviates from the plans and specifications, the Landscape Architect shall be notified for approval. The Contractor will be held responsible for deviations made without first obtaining the Landscape Architect's approval, and shall remove and relocate such items at his own expense if so directed by the Park Construction Inspector.

M. RELIEF FROM MAINTENANCE AND RESPONSIBILITY - RESOLUTION NO. 108 - DATED MARCH 26, 1970

Upon the written request of the Contractor and upon written approval by the City Landscape Architect, the Contractor may be relieved of the duty of maintaining and protecting certain portions of the work, which have been completed in all respects in accordance with the requirements of the contract and to the satisfaction of the City Landscape Architect, and thereafter, except with his consent, the Contractor will not be required to do further work thereon. In addition, such action by the City Landscape Architect will relieve the Contractor of responsibility for injury or damage to said completed portions of the work resulting from use by public traffic or from the action of the elements or from any other cause but not from injury or damage resulting from the Contractor's own operations or from his negligence. Nothing in this section providing for relief from maintenance and responsibility will be construed as relieving the Contractor of full responsibility for repairing or replacing defective work or materials found at any time before either the formal acceptance of the entire contract by the City Council, or during the applicable guarantee period.

N. CONFLICTS

This Section of the Special Provisions shall supersede Section 5-3 of the Standard Specifications. In case of conflict between drawings and specifications, the drawings shall govern in matters of quantity, the specifications in matters of quality. In case of conflict within the drawings involving quantities or within the specifications involving qualities, the greater quantity and the higher quality shall be furnished.

O. PROTECTION OF FACILITIES

The Contractor shall be directed to Section 7-7 of the Standard Specifications, which shall also include protecting the work and materials to be used thereon from damage or loss due to theft, vandalism and malicious mischief. The Contractor shall be held responsible for such damages or loss, which he shall remedy at his expense.

P. PROTECTION OF DRAINAGE FACILITIES

The Contractor shall maintain all new drainage facilities so storm drainage runoff into

the new system is clean. Use straw bales around inlets to minimize sediment infiltration during rainy season and control irrigation schedule to minimize runoff during initial planting of turf.

Q. CLEANING

The Contractor shall at all times keep the premises free from accumulations of waste material or rubbish caused by his employees work, and at the completion of work, he shall remove all his rubbish from and about the site and all his tools, scaffolding and surplus materials, and shall leave his work area, including all sidewalks and paving areas "broom clean", or its equivalent, unless more exactly specified in other trade sections of the specifications. In case of dispute, the City may remove the rubbish and charge the cost to the Contractor. The Contractor at his expense shall remove spillage resulting from hauling operations along or across any public traveled way immediately. Water or dust palliative shall be applied if ordered by the Park Construction Inspector for the alleviation or prevention of dust nuisance. Construction operations shall be conducted in such a manner as to cause as little inconvenience as possible to abutting property owners.

R. SUBMITTALS

In accordance with the provisions of Section 5-7, Standard Specifications of the City of Sacramento(except where noted below), the Contractor shall furnish the Landscape Architect with such shop drawings and other descriptive materials as may be necessary to adequately describe the equipment, material, and fabricated items proposed to be furnished under this contract, and to determine their compliance with the specifications, design, and arrangement shown on the contract drawings. Items to conform to Special Provisions and may include but not limited to:

Item	**Product Data/Catalog Cuts**	**Shop Drawings**	**Mock-up or Sample**
PVC Drain Pipe	X		
Drainage Structures	X	X	
Sanitary Sewer Pipe	X		
Play Area Catch Basin	X	X	
Aggregate Base	X		
Asphaltic Concrete	X		
Concrete Curbs and Pavement	X		X
Colored Concrete & Curing Compounds	X		X
Expansion Joint Materials	X		X
Reinforcement	X		
Decomposed Granite Paving	X		X
Landscape Boulders	X		X
Truncated Domes	X		
Basketball Posts and Goals	X		
Horseshoe Court	X	X	

All Playground Equipment & Swings	X	X	
Concrete Playground Components	X	X	
Tike Track Signs and Equipment	X	X	
Pour-in-Place Rubber Surfacing	X		
Rubber Mats under Swing	X		
Playground Wood Fiber	X		X
Trash Receptacle	X		
Drinking Fountain	X		
Picnic Table	X		
Bench with Back	X		
Bench without Back			
Concrete Park Sign	X		
Metal Sign Installation Hardware			
Electrical System	X		
Central Irrigation Controller	X		
Gate Valves	X		
Remote Control Valve	X		
Valve Boxes & Lid	X		
Quick Coupler Valve	X		
Spray Head	X		
Rotor	X		
Main and Domestic Water Line	X		
PVC Pipe Fittings	X		
Booster Pump Assembly	X	X	
Meter & Backflow Devices	X		
Solvent Weld for PVC	X		
Swing Joint Assemblies	X		
Irrigation Piping	X		
Control Wire & Connectors	X		
Soil Report and Soil Amendments	X		X
Pre-emergent	X		
Bark Mulch	X		X
Turf Hydroseed Mix	X		
Plant Materials	X		X
Landscape Weed Fabric and Staples or Fasteners	X		X
Painted Striping and Markings	X	X	
Metal Shade Structure	X	X	
Fabric Shade Structure	X	X	

One (1) copy of such submittals shall be furnished for review by the Landscape Architect, **a digitally scanned copy** will promptly be returned with approval, rejection, or approval with modification. Neither equipment nor material shall deviate in any way from the approved drawings without prior written approval of the Landscape Architect. Any fabrication of other work performed in advance of such approval shall be done entirely at the risk of the Contractor. The approval of submitted drawings or other descriptive material shall not relieve

the Contractor of any obligation or responsibility for fulfillment of the contract as prescribed.

S. RECORD DRAWINGS OF NEW CONSTRUCTION

Should the work as installed differ from the original design, the Contractor shall supply the City with a reproducible Mylar "as-built" drawing with all deviations from the original recorded thereon (layout and grades included). This "as-built" shall be found to be of acceptable quality by the Landscape Architect. Upon request, the City shall supply the Contractor with a Mylar base map for his/her "as-built" drawing. "As-built" drawings shall also be required as stated in Section 36-4 of the Standard Specifications.

T. LICENSE REQUIREMENTS

For this publicly bid project either a General Engineering Contractor "A" that also holds a "C27" License or a General Engineering Contractor "A" License with a qualified subcontractor "C27" Licensed. The "C27" contractor shall have previous park construction experience, and shall be required to install the irrigation and landscaping for this project. The "A" contractor is categorized as a general engineering contractor as stated in the Business and Professions Code (B&P) Section 7056 of Article 4 Classifications on the California Contractors State License Board website.

U. PROTECTION OF EXISTING CONCRETE AND ASPHALT PAVEMENTS

Contractor shall repair and replace to City standards any existing asphalt or concrete pavements damaged during construction activities at no expense to the City. These pavement areas include street, curb and gutter, sidewalk and park path. Contractor shall meet with City inspector prior to construction activities to document existing conditions of these paved areas.

V. PROJECT COORDINATION

Contractor shall complete all general coordination with the Project Manager the Inspector and other staff as necessary to complete the Project in an efficient workmanlike manner; Submittals; Record Drawings; Maintenance of Traffic, Public Safety, and Convenience; Protection of Existing Improvements; Construction Facilities and Temporary Controls; Temporary Electricity; Project Closeout; and Operation and Maintenance Data for this project.

W. City Code 3.60.020 Determination of lowest responsible bidder

Where any provision of the city charter or this chapter requires competitive bidding and award of the contract for a public project to the lowest responsible bidder, the lowest responsible bidder shall be determined as follows:

a. In determining whether a bidder is responsible, consideration shall be given to: (i) the quality of a public project to be provided by the bidder; (ii) the ability, capacity and skill of the bidder to perform the contract; (iii) the ability of the bidder to perform the contract within the time specified, without delay; (iv) the character, integrity, reputation, judgment, experience and efficiency of the bidder; and (v) the quality of the

bidder's performance on previous contracts with the city.

b. The city council may by resolution, from time to time, adopt standard minimum qualifications for bidders on competitively bid contracts for public projects. If such standard minimum qualifications are included in the bid specifications for a contract, no bidder shall be considered "responsible" unless it is determined to be responsible in consideration of the factors set forth in subsection A, above, and also meets such standard minimum qualifications at the time of bid opening. The adoption and use of standard minimum qualifications shall not in any way limit or affect the city's ability to: (i) review information contained in a bid, and additional relevant information, and determine whether the bidder is a responsive and/or responsible bidder; or (ii) establish different and/or additional qualification requirements for specific contracts.

c. The city council may by resolution, from time to time, adopt programs or procedures for providing bid price preferences, including but not limited to, preferences to promote the participation and utilization of small and emerging business enterprises in the city's contracting for public projects. The lowest responsible bidder shall be the responsible bidder whose bid is responsive to the bid requirements, including without limitation any small and emerging business enterprise program requirements included in the bid specifications, and whose bid price is the lowest, after all bid prices are calculated to include any applicable bid price preferences. (Ord. 2002-013 § 2: Ord. 99-007 § 3: prior code § 58.01.102)

X. City of Sacramento Subcontractor and ESBE Participation Verification FM440.

EBE and SBE Certification Statements are due to the contract manager by the close of business two days after bid opening for bid to be responsive.

Y. All publicly bid projects are subject to Performance and Payment Bonds.

Z. California Business and Professions Code, Section 7059 states that the Public Works agency has the authority to select classifications for the project.

AA. BUILDING PERMITS

The Contractor shall be responsible for picking up the project building permit(s) when ready to issue; be responsible for coordinating all necessary City Building Department inspections as well as any special inspections required by the permit(s); and be responsible for finalizing/closing out the building permit(s) with the City Building Department. The City shall pay for all building permit fees and special inspections.

If the Contractor fails to allow for the required building permit and special inspections of the work, the Contractor shall be liable for the costs to remove and reconstruct work to allow for the required inspections and for issuance of the final building permit.

II. ITEMS OF THE BASE BID PROPOSAL

PARK IMPROVEMENTS:

Item No. 1 – Clearing and Grubbing

This item shall consist of clearing and grubbing for the park development, and tree pruning of existing trees in conformance with Sections 12, 13 and 15 of the Standard Specifications and these Special Provisions.

A. Clearing and Grubbing shall conform to Section 12 of the Standard Specifications. All weeds less than two inches (2") in height may be disked under to a minimum depth of six inches (6"). All other weeds, shrubs, brush, vines, debris and all other objection material within the project site shall be removed.

B. Debris - All resulting debris shall become the property of the Contractor, and disposed of outside the project limits at the Contractor's expense.

C. Tree Pruning shall consist of pruning the existing trees within the park which are adjacent to the masonry wall, to a height of seven feet (7') above grade.

Payment shall be at the lump sum price bid, and shall include full compensation for furnishing all labor, material, tools, equipment and incidentals and for doing all work involved in Site Clearing and Grubbing as shown on the plans, as specified in these Special Provisions and as directed by the Landscape Architect.

Item No. 2 – Temporary Construction Fence to Install

This item shall consist of furnishing, installing and maintaining a temporary 6' Chain Link Panel Construction Fence around the construction area shown on the Plans in conformance with Section 10 of the Standard Specifications.

A. Demolition shall begin only after the temporary fence has been installed. Fence to remain in place throughout the duration of the project until project acceptance, or as directed by the Park Construction Inspector.

Payment shall be made at the lump sum price bid, and shall include full compensation for furnishing all labor, materials, tools, equipment and incidentals, and for doing all work involved in Temporary Construction Fence to Install as shown on the plans, as specified in these Special Provisions and as directed by the Landscape Architect.

Item No. 3 - Erosion and Sediment Control

This item shall consist of Erosion and Sediment Control at the locations indicated on the plans in conformance with Sections 13 and16 of the City Standard Specifications and per the State Water Resources Control Board , Order No. 2009-0009-DWQ and these Special Provisions.

A. Storm Water Pollution Prevention Plan (SWPPP) – The City has prepared a SWPPP document per the requirements of this project. The contractor and its employees shall be familiar with the requirements outlined in the SWPPP document. The contractor shall have a have a staff person who is a Qualified SWPPP Practitioner (QSP) on site or have a staff person trained by a QSP on site during construction business hours.

The SWPPP shall reside on the site and or with the construction Forman throughout the duration of construction. The completed SWPPP Manual and Log shall be returned to the City's QSP prior to the final acceptance of the project.

B. BMP Maintenance and Maintenance Log - The contractor's onsite QSP shall complete a maintenance inspection at a minimum of once a week and the inspection notes and information shall be logged in the SWPPP. The log shall have the time and date of when the maintenance and inspection was conducted. The City's QSP will also conduct maintenance inspections on a random basis and before, during and after precipitation events. If there is a dispute between the contractors and the City's QSP regarding the BMP maintenance then the City's QSD shall decide what is required. The completed maintenance log shall be kept in the SWPPP. Any required changes to the BMP's or erosion and sediment control plan shall be logged by the City's QSP.

More information and details of Best Management Practice the contractor shall refer the the SWPPP prepared for this project and the Erosion and Sediment control plan.

C. Housekeeping Practices shall be implemented as follows:

1. Solid Waste Management procedures shall include designated waste collection areas and containers in areas indicated. Arrange for regular removal and disposal from the site of solid waste. On a daily basis, clear site of trash including organic debris, packaging materials, scrap or surplus building materials, as well as domestic waste. Solid Waste Containers shall have a lid/ cover and shall covered it at the end of each work day or when its windy.

2. Material Delivery and Storage Area shall be designated and provided with a secondary containment method, as with berms. Store material on pallets and provide covering or water tight containers for soluble materials. Locate materials in a lockable storage contain or other secure enclosure to insure items cannot be vandalized or displaced during nonworking hours. Inspect area weekly and 48 hours prior to a storm event. If a spill is discovered the contractor shall first notify the contractor's and the City's QSP immediately and then have the QSP provide direction on how the spill should be cleaned up and if testing will be required.

3. Concrete Waste Area shall be designated and provide for a temporary pit to be used for concrete truck washout. Dispose of hardened concrete offsite. At no time shall a concrete truck dump its waste and clean its truck into the City storm drains via curb

and gutter. Inspect daily to control runoff, and weekly for removal of hardened concrete. If the contractor is has a designated area for the concrete washout on site the contractor shall cover and divert rain water from entering into the washout area. The contractor can use a mobile concrete washout or other similar concrete washout system.

4. Paint and Painting Supplies instructions shall be given to employees and subcontractors regarding reduction of pollutants including material storage, use, and clean up. Inspect site weekly for evidence of improper disposal. A second containment system shall be used to minimize pollutants from escaping the washout areas. In addition the contractor shall place plastic or some other non permeable lining on the ground to minimize contact between the native soil and the pollutants.

5. Vehicle Fueling, Maintenance and Cleaning shall be located in a designated area with a secondary containment, as with berms. . In addition the contractor shall place plastic or some other non permeable lining on the ground to minimize contact between the native soil and the pollutants. Provide equipment with drip pans. Restrict on-site maintenance and cleaning of equipment to a minimum. Inspect area weekly.

6. Hazardous Waste Management instructions shall be given to all employees to prevent the discharge of pollutants from hazardous wastes to the drainage system through proper material use, and waste disposal. Hazardous waste products commonly found on-site include but are not limited to paints & solvents, petroleum products, fertilizers, herbicides & pesticides, soil stabilization products, asphalt products, and concrete curing products. A list of materials expected to be used is listed in the SWPPP. If additional items or items need to be removed the contractor shall notify the City QSP.

7. Dust Control: The Contractor shall comply with all City and County of Sacramento, State of California air pollution control rules, regulations, ordinances, and statues which apply to any work performed pursuant to the contract, including any air pollution control rules, regulations, ordinances, and statutes, specified in the Government Code. The Contractor shall be responsible for the control of dust within the limits of the project at all times including weekends and holidays in addition to normal working days. The Contractor shall take whatever steps are necessary or required by the Inspector to eliminate the nuisance of blowing dust without causing sediment, debris or litter to enter the City storm drain system.

8. Erosion, Sediment, and Pollution Control The Contractor shall be responsible for controlling erosion and sedimentation within the limits of the project. In addition the contractor shall take measures to eliminate any water with pollutants from entering the project site as 'run-on'. The contractor shall be responsible for erosion and sediment control at all times during (working hours) and during normal working days, excluding evenings, weekends and holidays. The Contractor shall prevent sediment and construction debris from entering the City storm drain system.

9. Non-Storm Water, slurry and sediment from concrete or asphalt sawcutting operations shall not be allowed to enter the City storm drain system, but instead must be collected and disposed of, by the Contractor, in some manner approved by the Inspector.

10. Site Cleanup: The Contractor shall keep the project site clean and free of dust, mud, and debris resulting from the Contractor's operations. Daily clean up throughout the project shall be required as the Contractor progresses with the work. Extra precautions and clean up efforts shall be made prior to weekends and holidays, and before a predicted rain event.

    Daily all paved areas within the limits and surrounding the project shall be cleaned and free of sediments, asphalt, concrete and any other construction debris. The Contractor will not be allowed to clean sediment and debris from the street by using water to wash down streets. The streets will be allowed to be washed only after the streets have been thoroughly swept and/or vacuumed and inlet protection has been placed at all storm drain inlets to catch any remaining sediments from the streets.

    Spillage of earth, gravel, concrete, asphalt, or other materials resulting from hauling operations along or across any public traveled way shall be removed immediately by the Contractor at his expense. If site is not kept sufficiently clean the City will take measures to clean it and back charge the Contractor.

11. More information and details of Best Management Practice the contractor shall refer the SWPPP prepared for this project and the Erosion and Sediment control plan.

D. Construction site shall be prepared by the Contractor prior to the start of construction and shall be have erosion and sediment control measures in place until the project is complete. Contractor shall ensure to have all erosion and sediment control measures as outlined on the plans and in the SWPPP in place throughout the year.

E. Erosion and sediment control measures shall be installed and maintained before the start of construction begins and until disturbed areas are stabilized. All erosion and sediment control measures shall be checked and maintained by the contractor on a minimum of a weekly basis, before and after and during all storms to ensure measures are functioning properly.

F. Erosion Control Plan may not cover all the situations that arise during construction due to unanticipated field conditions. Changes to the erosion and sediment control plan shall be made to meet field by the City's QSP. The contractor shall make the required changes within 48 hours.

G. Exposed / Disturbed soils that are present, the Contractor shall replant the areas with native compatible, drought-resistant vegetation prior to the end of construction, before shutting a site down for the wet seasons, or areas not actively being constructed within the last 14 calendar days. In addition the contractor shall use wet suppression to dampen the soil to minimize dust on as need basis. The contractor shall provide a price in the bid to:

    1. Install Poly-Acrylamide (PAM) and Copolymer of Acrylamide where the paving is scheduled to be installed (price to install two times)
    2. Install straw mulch with tackifier, install where planting is scheduled to be installed. (Price to install two times).
    3. Installation Copolymers of Sodium Acrylates and Acrylamides installed on slopes between 5:1 to 3:1. (Price to install two times).

The contractor shall provide a square foot price per application (within the Schedule of Unit Pricing) to install these items as described above. If additional applications are required then the City will prepare a change order to increase the contract amount. If the items are not installed as described above then the City will prepare a deductive change order at the end of the project.

H. Stabilized Construction Entrance shall be installed by the Contractor prior to the commencement of construction including clearing and grubbing. Location of the entrance may be adjusted by the Contractor to facilitate grading operations. All construction traffic entering the paved road must cross the stabilized construction entrance. The stabilized construction entrance shall remain in place until the road base rock course is completed or when the City QSP authorizes the removal of the stabilized construction entrance. The contractor will be responsible for cleaning the stabilized construction entrance if the QSP finds it requires maintenance. All sediment deposited on paved roadways shall be swept at the end of each working day or as necessary.

I. Fiber Rolls shall be installed per the plans and shall be placed around all new and existing drainage structure openings immediately after the structure opening is constructed. All fiber rolls shall be maintained and remain in place until construction is completed.

J. Risk Level 2 has been determined for the Dogwood Park project. The SWPP has been prepared to address Rick Level 2 requirements of the General Permit.

Payment shall be made at the lump sum bid price, and shall include full compensation for furnishing all labor, materials, tools, equipment, and incidentals and for doing all work involved in completing the Erosion and Sediment Control as shown on the plans, as specified in these Special Provisions and as directed by the Landscape Architect.

Item No. 4 – Construction Staking

This item shall consist of Construction Staking the existing surface to the lines for the park development shown on the plans in conformance of the Standard Specifications and these Special Provisions.

A. Staking:

1. Vertical control is established by the bench mark indicated on the drawings.

2. Layout of work shall be done under the supervision of the Contractor by a City-approved Land Surveyor licensed in California using professional-type instruments. Contractor shall establish elevations and locate and stake all on-site improvements and grading for approval by the City prior to proceeding and shall be responsible for any damage that may be sustained by the City or others from incorrect locations of site improvements. This surveyor shall certify that the completed work is done in a manner that the City can check from conformance as the work progresses.

Payment shall be at the lump sum price bid and shall include full compensation for furnishing all labor, material, tools, equipment and incidentals and for doing all work involved in Construction Staking as shown on the plans, as specified in these Special Provisions and as directed by the Landscape Architect.

Item No. 5 – Site Grading

This item shall consist of Site Grading the existing surface to the lines and grades for the park development shown on the plans in conformance with sections 14 and 15 of the Standard Specifications and these Special Provisions.

A. Layout of Work:

1. Grade the site to the tolerances shown.

2. Tolerances: Site grading shall be to the elevations shown on the Drawings, plus or minus 0.1 foot vertically.

B. The Contractor shall meet the lines and grades as shown on the grading plan. It shall be at the discretion of the Landscape Architect to allow the Contractor to make necessary adjustments to balance the earthwork on site at no additional cost to the City. The Contractor shall be solely responsible for earthwork calculations.

C. Relative Compaction for landscaped areas shall be 85%.

D. Planter Areas adjacent to paved areas shall be graded so that after settlement, the soil will be two inches (2") below the top of adjacent pavement, curbs or mowstrips.

E. Site Grading shall be approved by the Landscape Architect upon completion of grading operations and prior to beginning landscape planting.

F. Excavation Grading shall include removal of soil as required to construct concrete walkways and aggregate base, playground, curbing, mow strips, concrete pads, and planted areas. All excavated soil may be used in grading operations or placed outside of project limits within the regional park at the Contractor's expense.

Payment shall be at the lump sum price bid, and shall include full compensation for furnishing all labor, material, tools, equipment and incidentals and for doing all work involved in Site Grading as shown on the plans, as specified in these Special Provisions and as directed by the Landscape Architect.

Item No. 6 – Catch Basin to Construct

This item shall consist of furnishing and constructing a Catch Basin complete with a concrete collar at the location and elevations as shown on the plans in conformance with the Standard Specifications and these Special Provisions.

A. Catch Basin may be poured in place or may be precast, Christy model no. "U21" series or "U21S" meeting city required dimension ratios or approved equal.

B. Concrete shall be Portland Cement Concrete Class "C" or "D", as specified in Section 10-5, and concrete work shall be completed in conformance with applicable requirements of Section 20 of the Standard Specifications.

C. Grate shall be Christy light duty, welded steel grate with cross bars model U-NT, sized to fit catch basin with lock down bolts, or approved equal.

Payment shall be made at the unit price bid, and shall include full compensation for furnishing all labor, materials, tools, equipment and incidentals and for doing all work involved in Catch Basin to Construct as shown on the plans, as specified in these Special Provisions and as directed by the Landscape Architect.

Item No. 7 - Play Area Catch Basin to Construct

This item shall consist of furnishing and constructing a Play Area catch basin complete with steel cover and gravel sump as shown on the plans in conformance with the Standard Specifications and these Special Provisions.

A. Concrete shall be Portland Cement Concrete Class "C" or "D", as specified in Section 10-5, and concrete work shall be completed in conformance with applicable requirements of Section 20 of the Standard Specifications.

B. Steel Cover shall be 3/16' diamond plate hot-dipped galvanized after fabrication.

C. Base Rock shall be ¾" minimum to 1-1/2" maximum washed rock with no fines.

D. Pea Gravel shall be ¼" minimum to 2" maximum washed rock with no fines.

E. Geotextile Fabric shall be non woven polypropylene Geotextile fabric 140 N, Mirafo N-series or approved equal.

Payment shall be at the unit price bid, and shall include full compensation for furnishing all labor, materials, tools, equipment and incidentals and for doing all work involved in Play Area Catch Basin to Construct as shown on the plans, as specified in these Special Provisions and as directed by the Landscape Architect.

Item No. 8 - 6" PVC Drain Pipe to Place

This item shall consist of furnishing and placing 6" PVC Gravity Drain Pipe as shown on the plans in conformance with Sections 10 and 26 of the Standard Specifications and these Special Provisions.

A. PVC Drain Pipe and fittings shall conform to Section 10-19 of the Standard Specifications.

B. Trench Backfill shall conform to Drawing T-80 of the Standard Specifications.

Payment shall be made at the lump sum price bid, and shall include full compensation for furnishing all labor, materials, tools, equipment and incidentals and for doing all work involved in 6" PVC Drain Pipe to Place as shown on the plans, as specified in these Special Provisions and as directed by the Landscape Architect.

Item No. 9 - 8" PVC Drain Pipe to Place

This item shall consist of furnishing and placing 8" PVC Drain Pipe as shown on the plans in conformance with Sections 10 and 26 of the Standard Specifications and with these Special Provisions.

A. PVC Drain Pipe and fittings shall conform to Section 10-19 of the Standard Specifications.

B. Trench Backfill shall conform to Drawing T-80 of the Standard Specifications.

Payment shall be made at the lump sum price bid, and shall include full compensation for furnishing all labor, materials, tools, equipment and incidentals and for doing all work involved in 8" PVC Drain Pipe to Place as shown on the plans, as specified in these Special Provisions and as directed by the Landscape Architect.

Item No. 10 - Standard Man Hole No. 3 to Construct

This item shall consist of furnishing and constructing Standard Man Hole No. 3 (SDMH's) complete with concrete collar at the location and elevation as shown on the plans in conformance with Sections 25 and 38 of the Standard Specifications and these Special Provisions.

A. Standard Man Hole No. 3 shall be precast in accordance with Standard Drawing S 70.

B. Concrete shall be Portland Cement Concrete Type II Class "D", as specified in Section 10, and concrete work shall be completed in conformance with applicable requirements of Section 20 of the Standard Specifications.

Payment shall be made at the lump sum price bid, and shall include full compensation for furnishing all labor, materials, tools, equipment, and incidentals and for doing all work involved in Standard Man Hole No. 3 to Construct as shown on the plans, as specified in these Special Provisions and as directed by the Landscape Architect.

Item No. 11 - Storm Drain Cleanout to Construct

This item shall consist of constructing a Storm Drain Cleanout as shown on the plans, and these Special Provisions and in conformance with the Standard Specifications.

A. Storm Drain Cleanout shall be installed per Standard Drawings. Cleanout shall be installed with a valve box at finished grate, at the end. End of drain pipe shall be capped.

Payment shall be made at the lump sum price bid, and shall include full compensation for furnishing all labor, materials, tools, equipment, and incidentals and for doing all work involved in Storm Drain Cleanout to Construct as shown on the plans, as specified in these Special Provisions and as directed by the Landscape Architect.

Item No. 12 – 2" Domestic Water Meter, Backflow Preventer and Enclosure

This item shall consist of furnishing and installing a 2" domestic water meter, Backflow Preventer on a concrete pad with an insulated steel enclose as shown on the plans, in conformance with sections 10, 13, 14, 17, 27 and 38 of the Standard Specifications these Special Provisions.

A. Supply Line shall be PVC pipe under 2-1/2" and under shall be Schedule 40 and pipe 3" and large shall be Class 315, solvent weld and shall be installed in conformance with Section 10, 17, 24 and 38 of the Standard Specifications.

B. 2" Domestic Water Tap is existing as shown on the plans.

C. Water Meter shall be as specified in Section 27 of the Standard Specifications and to be installed by the City Water Division. Meter shall be the same size as the existing water tap. Contractor to pay water meter fee to City Utility Dept. Wate Meter shall conform to Section 36-5 of the Standard Specifications. The water meter shall be installed by the City Department of Utilities. Size of tap is shown on the plans, and Meter and Backflow prevention Assembly shall be same size as tap. For tap and meter information contact the City of Sacramento, Department of Utilities, located at 300 Richards Blvd., (916) 808-5454. Contractor shall allow 60 days for installation of water tap and meter.

D. Backflow Prevention Assembly Backflow Prevention Assembly shall conform to Sections 36-9, 10-49 and Standard Drawing No. "W-606" or "W-607" of Section 38 of the Standard Specifications.

CAUTION: Backflow Assembly Manufactured by the "Ames Fire and Waterworks Company" will not be approved

Models: COLT SERIES 200A, 300A, and MAXIM SERIES 400, 500.
These assemblies cannot be maintained or repaired if the assembly body is painted. The contractor will not paint over or cover the manufacturer's identification plate and the Backflow Assembly Serial Number.
prevention devices and risers shall be painted Hunter Green or approved equal.

E. Concrete Pad shall be installed as shown on the plans in conformance with sections 10, 19, and 24 of the Standard Specifications and with these Specials Provision.

F. Backflow Preventer Enclosure shall be Placer Waterworks model #PW/E1A1-M insulated backflow preventer enclosure or approved equal. Color shall be green. Available through Pacer Waterworks, Inc. (916) 773-2959, FAX (916) 773-2958.

Payment shall be made at the lump sum price bid, and shall include full compensation for furnishing all labor, materials, tools, equipment, and incidentals and for doing all work involved in completing the 2" Domestic Water Meter, Backflow Preventer and Enclosure as shown on plans, as specified in these Special Provisions and as directed by the Landscape Architect.

Item No. 13 – Domestic Water Line

This item shall consist of furnishing and installing a Domestic Water Line to the drinking fountain as shown on the plans, in conformance with sections 10, 13, 14, 17, 27 and 38 of the Standard Specifications these Special Provisions.

Domestic Water Line shall be PVC pipe under 2-1/2" and under shall be Schedule 40 and pipe 3" and large shall be Class 315, solvent weld and shall be installed in conformance with Section 10, 17, 24 and 38 of the Standard Specifications.

Payment shall be made at the lump sum price bid, and shall include full compensation for furnishing all labor, materials, tools, equipment and incidentals and for doing all work involved in Domestic Water Line as shown on the plans, as specified in these Special Provisions and as directed by the Landscape Architect.

Item No. 14 - Drinking Fountain to Install

This item consists of furnishing and installing an accessible Drinking Fountain with jug filler and associated appurtenance in conformance with these Special Provisions and the Standard Specifications.

A. Drinking Fountain Assembly shall be MDF 440-SM SS with Jug Filler, or approved equal. Powder coated finish, color shall be bronze. Nibco T-113-LF valve required. Freeze-proof valves are not required. Distributed by: Most Dependable Fountains, (800) 552-6331, fax (901) 867-0159 or Husband and Associates: 925-426-5001

B. 1" Supply Line shall be PVC pipe, Schedule 40, solvent weld with Schedule 80 fittings and shall be installed in conformance with Section 10 and Section 36 of the Standard Specifications.

C. Disinfection of the domestic water line shall be in conformance with Standard Specifications Section 27-12 – Disinfection of Water Mains. Delete the following paragraph Section 27-12, 5, e. and replace it with the following: "Twenty-Four (24) hours after flushing the chlorinated water from the domestic main the contractor will collect samples for testing." The samples shall be bacteriology tested for the items listed in Section 27-12, 5, f.

D. Two (2) Gate Valves with blow-off valves shall be installed in the water supply line in concrete valve boxes with locking tops. Gate valves shall be key-operated, size as shown on the plans.

E. Catch Basin shall be constructed as shown on the drawings. Concrete shall be Type II Class "D", as specified in Section 10 and concrete work shall be completed in conformance with applicable requirements of Section 30 of the Standard Specifications.

F. Drain Line shall be ABS or PVC pipe, Schedule 40, solvent weld with PVC DWV fittings and shall be installed in conformance with Section 10 and Section 36 of the Standard Specifications.

G. Drain Grate shall be No. 3 Round Drain, J. R. Smith Model 2110 series with vandal proof grate Model U or approved equal.

H. **ALL Bolts** shall be installed as specified by the manufacturer and shall be provided by the Contractor. All exposed bolts shall be cut to 3 exposed threads and all anchor bolts/ nuts shall be tack welded and all remaining exposed bolts/ nuts shall be tightened and secured with Loctite Adhesive, red 271 for a permanent installation.

I. Concrete Footing shall be Portland Cement Concrete Type II Class "D", as specified in Section 10 and installed in conformance with Section 20 of the Standard Specifications and the manufacturer's specifications.

J. Concrete Pad shall be paid for under "Concrete Flatwork to Install", of these Special Provisions. Concrete pad shall be thickened underneath area of anchoring to 6".

Payment shall be made at the lump sum price bid, and shall include full compensation for furnishing all labor, materials, tools, equipment and incidentals and for doing all work involved in Drinking Fountain to Install as shown on the plans, as specified in these Special Provisions and as directed by the Landscape Architect.

Item No. 15 – Aggregate Base to Place

This item shall consist of furnishing and installing aggregate base (AB) under all concrete flatwork, and asphaltic pavement as shown on the plans in conformance with Section 10, and 17 of the Standard Specifications and these Special Provisions.

A. Aggregate Base shall be Class II, per Section 26 of the State Standard Specifications.

B. Recycled Aggregate Base will be allowed and must conform to the requirements of Section 26 of the State Specifications, and tested prior to arrival at the site to verify that it meets the requirements of Class II Aggregate base.

Payment shall be made at the lump sum price bid and shall include full compensation for furnishing all labor, materials, tools, equipment and incidentals and for doing all work involved in providing and completing the Aggregate Base to Place under Concrete Flatwork as shown on the plans, as specified in these Special Provisions and as directed by the Landscape Architect.

Item No. 16 – Basketball Court Pavement to Place

This item shall consist of furnishing and installing the basketball court pavement consisting of three inches 3" of asphalt concrete as shown on plans in conformance with Section 10 and 22 of the Standard Specifications and these Special Provisions and Section 39 of the State Standard Specifications.

A. Asphalt Concrete shall be Type B, per the Standard Specifications.

B. Tack Coat shall be applied and shall be conform to Section 22-7 of the Standard Specifications.

C. Asphalt Binder shall be PG64-10 or PR64-16 and shall conform to Section 39 of the State Standard Specifications.

D. Flood Test: The asphalt pavement should be flooded to check for surface drainage, low areas, high areas greater than 1/8" tolerance. Out of tolerance areas should be repaired, filled to grade or re-installed.

Payment shall be made at the lump sum price bid, and shall include full compensation for furnishing all labor, materials, tools, equipment and incidentals, and for doing all work involved in Basketball Court Pavement to Place as shown on the plans, as specified in these Special Provisions and as directed by the Landscape Architect.

Item No. 17 - 4" Concrete Flatwork to Construct

This item shall consist of furnishing and constructing 4" reinforced Concrete Flatwork as shown on the plans in conformance with Sections 10, 18, and 24 of the Standard Specifications and as amended by these Special Provisions.

A. Portland Cement Concrete shall be Type II, Class "C", conforming to Section 10-5 of the Standard Specifications.

B. Expansion & Score Joints shall conform to Section 24-6 of the Standard Specifications with the exception of the following. Expansion joints and score joints shall be located where indicated on the plans and edged to a three-eighths inch (3/8") radius

C. Finish shall conform to Section 24-7 of the Standard Specifications with the following exception: the concrete shall be broomed perpendicular to the sidewalk edge with a medium finish.

D. Test Panel shall be **required** and shall be poured prior to placement of concrete flatwork. The contractor shall construct a test panel of 36" X 36" X 3-1/2" thick minimum dimensions. The Contractor shall notify the Landscape Architect and Inspector forty-eight (48) hours prior to test pour. If the test is found to be unsatisfactory by the City, additional test panels shall be constructed and finished until the correct finish is achieved. Workmen and equipment used in the construction of the test panel shall be the same as those used throughout the installation of concrete.

E. Reinforcement shall be intermediate grade and deformed in conformance with "deformed billet-steel bars for concrete reinforcement" (ASTM Designation A615) and with Section 21 of the Standard Specifications. Rebar shall be as shown on the plans.

Payment shall be at the lump sum price bid, and shall include full compensation for furnishing all labor, material, tools, equipment and incidentals and for doing all work involved in constructing 4" Concrete Flatwork to Construct as shown on the plans, as specified in these Special Provisions and as directed by the Landscape Architect.

Item No. 18 – 5" Concrete Flatwork to Construct

This item shall consist of furnishing and constructing 5" reinforced Concrete Flatwork as shown on the plans in conformance with Sections 10, 18, and 24 of the Standard Specifications and as amended by these Special Provisions.

A. Portland Cement Concrete shall be Type II, Class "C", conforming to Section 10-5 of the Standard Specifications.

B. Expansion & Score Joints shall conform to Section 24-6 of the Standard Specifications with the exception of the following. Expansion joints and score joints shall be located where indicated on the plans and edged to a three-eighths inch (3/8") radius

C. Finish shall conform to Section 24-7 of the Standard Specifications with the following exception: the concrete shall be broomed perpendicular to the sidewalk edge with a medium finish.

D. Test Panel shall be **required** and shall be poured prior to placement of concrete flatwork. The contractor shall construct a test panel of 36" X 36" X 3-1/2" thick minimum dimensions. The Contractor shall notify the Landscape Architect and Inspector forty-eight (48) hours prior to test pour. If the test is found to be unsatisfactory by the City, additional test panels shall be constructed and finished until the correct finish is achieved. Workmen and equipment used in the construction of the test panel shall be the same as those used throughout the installation of concrete.

E. Reinforcement shall be intermediate grade and deformed in conformance with "deformed billet-steel bars for concrete reinforcement" (ASTM Designation A615) and with Section 21 of the Standard Specifications. Rebar shall be as shown on the plans.

Payment shall be at the lump sum price bid, and shall include full compensation for furnishing all labor, material, tools, equipment and incidentals and for doing all work involved in constructing 5" Concrete Flatwork to Construct as shown on the plans, as specified in these Special Provisions and as directed by the Landscape Architect.

Item No. 19 – Exposed Aggregate Paving with Glass Beans to Construct

This item shall consist of furnishing all materials and equipment necessary for installing 6" thick reinforced seeded Exposed Aggregate with Glass Beans paving as shown on the plans in conformity with Sections 10, 18, and 24 of the Standard Specifications and as amended by these Special Provisions and the manufacturer's specifications.

A. Portland Cement Concrete shall be Type II, Class "D", conforming to Section 10-5 of the Standard Specifications.

B. Exposed Aggregate shall be 3/8" to ½" rounded washed aggregates. Color: Salt and Pepper,

Available from Cascade Rock, Inc. 8585 Kiefer Blvd., Sacramento, CA 95826, 1-800-897-7625, or cascaderock@sbcglobal.net. Aggregates shall be clean prior to top seeding into concrete. Contractor to seed the aggregate to create a dense field of aggregate with little to no concrete paving shown between the stones.

C. Glass Beans shall be by American Specialty Glass, Inc. or approved equal. Glass Beans to be Size 3 (3/8" to ½"), Color: Blue Raspberry. Hand Seed for a 20% coverage. Contractor to seed the glass beans with seeded exposed aggregate in the area indicated on the plans. Provide glass bean sample to City Landscape Architect prior to ordering.

Contact: American Specialty Glass, Inc. for ordering information. Address: 829 North 400 West, North Salt Lake, Utah 84504. Telephone: (877) 294-4222, or www.asgglass.com

Aggregate / Glass Bean Seeding:

1. Prepare and place your concrete flatwork.
2. Bull float the concrete to smooth out the surface, but don't rough trowel or finish trowel.
3. Spread the aggregate and glass out evenly on your concrete surface using the coverage rate and color, of glass specified.
4. Lightly trowel the aggregate and glass into the concrete gently pushing the glass into the still wet concrete mixture. Take care not to push the glass too far in. Leave some of the higher glass tips on the surface or even sticking out of the concrete.
5. Expose aggregate and glass by washing the surface (with muriatic acid or by other means)
6. Install the concrete sealer carefully once the concrete has cured, following the manufacturer's recommendation.

D. Concrete Sealant shall be SuperSeal25 Paver and Concrete Sealer, or approved equal, applied to all exposed aggregate concrete surfaces in accordance with the manufacturer's specifications.

E. Expansion & Score Joints shall conform to Section 24-6 of the Standard Specifications with the exception of the following. Expansion joints and score joints shall be located where indicated on the plans and edged to a three-eighths inch (3/8") radius.

F. Test Panel shall be **required** and shall be poured prior to placement of concrete flatwork. The contractor shall construct a test panel of 36" X 36" X 3-1/2" thick minimum dimensions. The Contractor shall notify the Landscape Architect and Inspector forty-eight (48) hours prior to test pour. If the test is found to be unsatisfactory by the City, additional test panels shall be constructed and finished until the correct finish is achieved. Workmen and equipment used in the construction of the test panel shall be the same as those used throughout the installation of concrete.

Payment shall be at the lump sum price bid, and shall include full compensation for furnishing all labor, material, tools, equipment and incidentals and for doing all work involved in completing Exposed Aggregate Paving with Glass Beans to Construct as shown on the plans, as specified in these Special Provisions and as directed by the Landscape Architect.

Item No. 20 – 6" Play Area Curb to Construct

This item shall consist of constructing 6" Play Area Curb to Construct as shown on the plans in conformance with Sections 10, 19, and 24 of the Standard Specifications and these Special Provisions.

A. Portland Cement Concrete shall be Type II, Class "C", conforming to Section 10-5 of the Standard Specifications.

B. Expansion Joints and Score lines shall conform to Section 24-6 of the Standard Specifications with the exception of the following. Expansion joints and score lines shall be placed to align with expansion joints and score lines in adjacent concrete flatwork.

C. Curb shall be poured monolithically with adjacent concrete flatwork with no score joint.

D. Reinforcement shall be intermediate grade and deformed in conformance with "deformed billet-steel bars for concrete reinforcement" (ASTM Designation A615) and with Section 21 of the Standard Specifications. Rebar shall be as shown on the plans.

A. Finish shall conform to Section 24-7 of the Standard Specifications with the

Payment shall be at the lump sum price bid, and shall include full compensation for furnishing all labor, materials, tools, equipment and incidentals and for doing all work involved in completing 6" Play Area Curb to Construct as shown on the plans, as specified in these Special Provisions and as directed by the Landscape Architect.

Item No. 21 – 9" Concrete Mow Strip to Construct

This item shall consist of constructing 9" Concrete Mow Strip as shown on the plans in conformance with Section 10, 19 and 24 of the Standard Specifications and these Special Provisions.

A. Portland Cement Concrete shall be Type II, Class "C", conforming to Section 10-5 of the Standard Specifications.

B. Reinforcement shall be intermediate grade and deformed in conformance with "deformed billet-steel bars for concrete reinforcement" (ASTM Designation A615) and with Section 21 of the Standard Specifications. Rebar shall be as shown on the plans.

C. Subgrade shall conform to Section 19 of the Standard Specifications, with the following exception: relative compaction shall be 85%.

D. Finish shall be broomed parallel to the mow strip edge with a medium broom finish. All exposed surfaces shall be finished to true lines and grades as shown on the plans.

E. Expansion Joints and Score lines shall conform to Section 24-6 of the Standard Specifications with the exception of the following. Expansion joints shall be place at 20' O.C., and score lines at 10' O.C.

Payment shall be made at the lump sum price bid, and shall include full compensation for furnishing all labor, materials, tools, equipment and incidentals and for doing all work involved in completing 9" Concrete Mow Strip to Construct as shown on plans, as specified in these Special Provisions and as directed the Landscape Architect.

Item No. 22 – Stabilized Decomposed Granite Pavement to Place

This item shall consist of furnishing and placing cement Stabilized Decomposed Granite Pavement on top of landscape weed fabric as shown on the plans and the detail thereon, in conformance with these Special Provisions.

A. Decomposed Granite: Decomposed granite, hereafter referred to as "DG", shall be Gold Track Fines as available from Granite Construction Co., Felton Quarry, Felton, CA 95018, (831) 335-3445, or "Butte" crushed rock fines, distributed by CL Smith, Woodland, CA (9530) 662-2633, or approved equal.

B. Submittal: Prior to placement of decomposed granite the Contractor shall submit a product sample and material summary sheet to the Project Landscape Architect a representative sample of decomposed granite for use on this project for approval. No decomposed granite shall be placed prior to receiving the Project Landscape Architect's approval.

C. Weed Control shall conform to Section 35-6 of the Standard Specifications.

D. Cement: Portland cement shall be DTSS Type II Modified added to the DG at the ratio of 12-15 lbs. per ton of decomposed aggregate.

E. Mixes: The quantity of water added to the mixture shall be adjusted to the absolute minimum required to permit uniform mixing. The materials shall be mixed in a drum-type mixer on the job or at a central mixing plant. The Contractor shall provide the Engineer sufficient notice of his intent to begin mixing so that the Engineer can provide inspection of the batching and mixing operation.

F. Landscape Weed Fabric shall be DeWitt Weed Barrier Landscape Fabric, 3.5 ounce, 12 yr, Color Brown, UV treated, spunbonded fabric or approved equal. Contact DeWitt Company 1-800-888-9669, or dewittcompany.com.

G. Metal Anchor Pins shall be by Dewitt or approved equal. Contact DeWitt Company 1-800-888-9669, or dewittcompany.com.

H. Test Sample: Provide a 10' by specified width as a test sample, to be approved prior to installation. The Contractor shall notify the Landscape Architect and Inspector forty-eight (48) hours prior to test sample. If the test is found to be unsatisfactory by the City, additional test samples shall be constructed and finished until the correct finish is achieved. Workmen and equipment used in the construction of the test sample shall be the same as those used throughout the installation of stabilized decomposed granite paving.

I. Installation: Evenly spread prepared crushed granite fines/binder material according to plans in

two inch (2") lifts on prepared sub-grade. Grade and smooth decomposed granite material, thoroughly water entire area to a uniformly moisture. Roll each lift with a 2000 to 4000 lbs. static drum roller to form a uniform, smooth surface. Compact each lift to 95%. Do not use vibratory plate compactor or vibration function on roller as vibration separates large aggregate particles.

Upon completion of the final lift, fill any depressions, holes or divots and reroll using the above process.

Allow sufficient curing period of +/- 48 hours prior to use. Take all precautions to protect completed work from traffic until completely dry. Rake off any crusted cement on top of surface and repair or replace all damaged areas due to tire ruts, erosions, compaction failure, etc. until the project is accepted.

J. Finish: The finished surface of the paving shall firm, stable and smooth and even, with a consistent grade, with no high or low points. The paving shall be flush with adjacent concrete containment edge.

Payment shall be made at the lump sum price bid, and shall include full compensation for furnishing all labor, materials, tools, equipment and incidentals and for doing all work involved in completing the Stabilized Decomposed Granite Pavement to Place as shown on the plans, as specified in these Special Provisions and as directed by the Landscape Architect.

Item No. 23 – Landscape Boulders to Place

This item shall consist of furnishing and installing Landscape Boulders at the locations shown on the plans, in conformance with the Standard Specifications and these Special Provisions.

A. Landscape Boulders shall be the type and size per plans, or approved equal. The Landscape Architect shall approve the boulders on site prior to installation.

B. Placement of Boulders shall be per plans, and reviewed by the Landscape Architect.

Payment shall be made at the lump sum price bid, and shall include full compensation for furnishing all labor, materials, tools, equipment and incidentals and for doing all work involved in Landscape Boulders to Install as shown on the plans, as specified in these Special Provisions and as directed by the Landscape Architect.

Item No. 24 – Basketball Posts and Backboards to Install

This item shall consist of furnishing and installing one pair of Basketball Posts, Backboards, Goals and Nets as shown on the plans in conformance with these Special Provisions and the manufacturer's specifications.

A. Basketball Posts shall be by True Bounce or approved equal. Backboard Poles are 5" x 5" x 3/16" square steel poles with a four foot extension model #PA554. Backboard shall be clear 42' x 72" x 1/2" model XL7042, with 72" backboard pad model # BP072. Goals are heavy duty breakaway goals model # RB1000. Nets are nylon, model #BN 141. Posts shall be powder-coated, and the color shall be black. Install according to manufacturer's specifications.

Distributed by: California Sports and Recreation Inc., Contact info(800) 235-2440 or nfo@CalRec.com.

B. Concrete Footings shall be installed as specified by the manufacturer and shall be Type II Class "D" Portland Cement Concrete, conforming to Paragraph 10 of the Standard Specifications.

Payment shall be made at the unit price per each, and shall include full compensation for furnishing all labor, materials, tools, equipment and incidentals and for doing all work involved in completing Basketball Posts and Backboards to Install as shown on the plans, as specified in these Special Provisions and as directed by the Landscape Architect.

Item No. 25 – Horseshoe Court Equipment to Construct

This item shall consist of furnishing and constructing a horseshoe court backboards and steel rods as shown on the plans in conformance with Sections 10, 19, 24 and 38 of the Standard Specifications and these Special Provisions and the Standard Specifications.

A. Portland Cement Concrete shall be Type II, Class "C", conforming to Section 10-5 of the Standard Specifications.

B. Reinforcement shall be intermediate grade and deformed in conformance with "deformed billet-steel bars for concrete reinforcement" (ASTM Designation A615) and with Section 21 of the Standard Specifications. Rebar shall be as shown on the plans.

C. Finish shall be a smooth troweled finish.

D. Stainless Steel Rod shall as shown on the plans.

E. Finish shall conform to Section 24-7 of the Standard Specifications with the following exception: the concrete shall be broomed perpendicular to the sidewalk edge with a medium finish.

F. Backstops shall be constructed as shown on the plans.

G. Trex boards shall be shall be sized as shown on the plans.

H. Bolts, Nuts, and Washers shall be zinc chromate plated or galvanized and sized and installed as shown on the plans. Bolts shall be installed as specified by the manufacturer and shall be provided by the Contractor. All exposed bolts shall be ground down flush with the nut and shall be peened or tack welded for a permanent installation.

Payment shall be made at the lump sum price bid, and shall include full compensation for furnishing all labor, materials, tools, equipment and incidentals and for doing all work involved in Horseshoe Court Equipment to Construct as shown on the plans, as specified in these Special Provisions and as directed by the Landscape Architect.

Item No. 26 - Play Structure to Install

This item shall consist of furnishing and installing the Play Structure as shown on the plans in conformance with Section 10 of the Standard Specifications, these Special Provisions and the manufacturer's specifications.

A. Play Structure shall be per plans, or approved equal. The play equipment components shall be installed as shown on the plans and shall be composed of such material and constructed as specified by the manufacturer. All posts shall be steel. The contractor will be responsible for receiving and storing the play equipment until it is installed. Colors shall be as shown on the plans.

B. Concrete Footings shall be installed as specified by the manufacturer and shall be Type II Class "D" Portland Cement Concrete, conforming to Section 10 of the Standard Specifications.

C. Manufacturer's Representative shall inspect the play equipment after the installation and provide the City with a letter that states the play equipment is installed in compliance with the manufacturer's specifications and details.

D. Compliance: Contractor shall assemble and install playground equipment in compliance with the written instructions of the manufacturer. The playground equipment shall either be:

1. Assembled and installed by or under the direct supervision of an individual who is authorized by the manufacturer to assemble and install the equipment.

AND

2. Prior to its first use, the playground equipment shall be inspected by a Certified Playground Safety Inspector who shall certify in writing that the equipment, insofar as it can be seen without disassembling it or digging into the surfacing, is in compliance with ASTM F-1487-98 and CPSC Handbook Publication number 325.

Payment shall be at the lump sum price bid, and shall include full compensation for furnishing all labor, material, tools, equipment and incidentals and for doing all work involved in completing Play Structure to Install as shown on the plans, as specified in these Special Provisions and as directed by the Landscape Architect.

Item No. 27 – Swings and Independent Play Items to Install

This item shall consist of furnishing and installing the Swings and Independent Play Items as shown

on the plans in conformance with Section 10 of the Standard Specifications, these Special Provisions and the manufacturer's specifications.

A. Swings and Independent Play Items shall be per plans, or approved equal. The play equipment components shall be installed as shown on the plans and shall be composed of such material and constructed as specified by the manufacturer. All posts shall be steel. The contractor will be responsible for receiving and storing the play equipment until it is installed. Colors shall be as shown on the plans.

B. Concrete Footings shall be installed as specified by the manufacturer and shall be Type II Class "D" Portland Cement Concrete, conforming to Section 10 of the Standard Specifications.

C. Manufacturer's Representative shall inspect the play equipment after the installation and provide the City with a letter that states the play equipment is installed in compliance with the manufacturer's specifications and details.

D. Compliance: Contractor shall assemble and install playground equipment in compliance with the written instructions of the manufacturer. The playground equipment shall either be:

1. Assembled and installed by or under the direct supervision of an individual who is authorized by the manufacturer to assemble and install the equipment.

AND

2. Prior to its first use, the playground equipment shall be inspected by a Certified Playground Safety Inspector who shall certify in writing that the equipment, insofar as it can be seen without disassembling it or digging into the surfacing, is in compliance with ASTM F-1487-98 and CPSC Handbook Publication number 325.

Payment shall be at the lump sum price bid, and shall include full compensation for furnishing all labor, material, tools, equipment and incidentals and for doing all work involved in completing Swings and Independent Play Items to Install as shown on the plans, as specified in these Special Provisions and as directed by the Landscape Architect.

Item No. 28 – Independent Concrete Items to Install

This item shall consist of furnishing and installing a various Concrete Independent playground components listed on the plans, including any required reinforced concrete pad as indicated on the plans in conformance with these Special Provisions and the manufacturer's specifications.

A. Independent Concrete Items shall per Plans, or approved equal, and installed per the manufacturer's instructions. The concrete items shall be installed as shown on the plans and shall be composed of such material and constructed as specified by the manufacturer.

B. Portland Cement Concrete shall be Type II, Class "C", conforming to Section 10-5 of the Standard Specifications.

C. Reinforcement shall be intermediate grade and deformed in conformance with "deformed

billet-steel bars for concrete reinforcement" (ASTM Designation A615) and with Section 21 of the Standard Specifications. Rebar shall be as shown on the plans.

D. Manufacturer's Representative shall inspect the play equipment after the installation and provide the City with a letter that states the play equipment is installed in compliance with the manufacturer's specifications and details.

E. Compliance: Contractor shall assemble and install concrete playground equipment in compliance with the written instructions of the manufacturer. The playground equipment shall either be:

1. Assembled and installed by or under the direct supervision of an individual who is authorized by the manufacturer to assemble and install the equipment.

AND

2. Prior to its first use, the playground equipment shall be inspected by a Certified Playground Safety Inspector who shall certify in writing that the equipment, insofar as it can be seen without disassembling it or digging into the surfacing, is in compliance with ASTM F-1487-98 and CPSC Handbook Publication number 325.

Payment shall be made at the lump sum price bid, and shall include full compensation for furnishing all labor, materials, tools, equipment and incidentals, and for doing all work involved in Independent Concrete Items to Install as shown on the plans, as specified in these Special Provisions and as directed by the Landscape Architect.

Items No. 29 – Tike Track Signs and Equipment

This item shall consist of furnishing and installing Tike Track Signs and Equipment as shown on the plans in conformance with Section 10 of the Standard Specifications, these Special Provisions and the manufacturer's specifications.

A. Tike Track Signs and Equipment shall be per plans, or approved equal. The play equipment components shall be installed as shown on the plans and shall be composed of such material and constructed as specified by the manufacturer. All posts shall be steel. The contractor will be responsible for receiving and storing the play equipment until it is installed. Colors shall be as shown on the plans.

B. Concrete Footings shall be installed as specified by the manufacturer and shall be Type II Class "D" Portland Cement Concrete, conforming to Section 10 of the Standard Specifications.

C. Manufacturer's Representative shall inspect the play equipment after the installation and provide the City with a letter that states the play equipment is installed in compliance with the manufacturer's specifications and details.

D. Compliance: Contractor shall assemble and install playground equipment in compliance with

the written instructions of the manufacturer. The playground equipment shall either be:

1. Assembled and installed by or under the direct supervision of an individual who is authorized by the manufacturer to assemble and install the equipment.

AND

2. Prior to its first use, the playground equipment shall be inspected by a Certified Playground Safety Inspector who shall certify in writing that the equipment, insofar as it can be seen without disassembling it or digging into the surfacing, is in compliance with ASTM F-1487-98 and CPSC Handbook Publication number 325.

Payment shall be at the lump sum price bid, and shall include full compensation for furnishing all labor, material, tools, equipment and incidentals and for doing all work involved in completing Tike Track Signs and Equipment as shown on the plans, as specified in these Special Provisions and as directed by the Landscape Architect.

Items No. 30 – Painted Pavement Striping and Markings

This item shall consist of accurately locating and painting two inch (2") wide stripes and pavement markings on the basketball courts and Tike Track as shown on the Plans, in conformance Sections 32-2 and 32-3 of the Standard Specifications and these Special Provisions.

A. Paint shall be Plexicolor Line Paint by California Products Corporation, or equivalent by Flintkoke Co., Chevron Asphalt Co., or approved equal. Color shall be white. No oil-based paint shall be allowed. Paint, 12 to 14 mils thick when wet.

B. Tolerance and Appearance shall conform to Section 32-2 of the Standard Specifications with the following exception: that there shall be no more than one-half inch (1/2") deviation from tangent alignment or true arc.

Payment shall be made at the lump sum price bid and shall include full compensation for furnishing all labor, materials, tools, equipment, and incidentals and for doing all work involved in Painted Pavement Striping and Markings as shown on the plans, as specified in these Special Provisions and as directed by the Landscape Architect.

Item No. 31 - Rubber Mat Under Swing to Install

This item shall consist of furnishing and installing a Rubber Mat under the swing as shown on the plans and in conformance with these Special Provisions and as specified by the manufacturer.

A. Rubber Mat shall be a Woodcarpet PVC Mat by Zeager Bros. Inc. or approved equal, and installed per the manufacturer's instructions.

Supplier may be contacted at:
All About Play, Kristen Petty (916) 923-2180

B. Anchoring shall be done with the use of 3/8 inch airline cable or stainless steel cable connected to ½" diameter x 36 inch recessed steel anchor stakes at anchor points. Mat edges slope below wood fiber material to eliminate tripping hazards. Cable to be supplied by the Contractor. Anchor stakes shall be ordered along with rubber mat.

Payment shall be at the unit price bid, and shall include full compensation for furnishing all labor, material, tools, equipment and incidentals and for doing all work involved in completing Rubber Mat Under Swing to Install as shown on the plans, as specified in these Special Provisions and as directed by the Landscape Architect.

Item No. 32 – Play Area Wood Fiber to Place

This item shall consist of furnishing and installing Wood Fiber to a compacted twelve inches (12") minimum finished depth **at time of final acceptance by the City** and Geo-textile Fabric in the play area as shown on the plans in conformance with these Special Provisions and the manufacturer's specifications.

A. Wood Fiber shall be Sun-Up Playground Fiber, or approved equal. Wood fiber shall be 100% virgin wood fiber comprised of new Incense Cedar. Wood fiber shall have blunt ends, and shall be void of mixed woods, recycled wood, nails, staples, bark, leaves, dirt, twigs or splinters. Wood Fiber shall be non-toxic with no chemicals or additives, and shall be wheelchair accessible. Wood fiber fall material shall meet CPSC & ASTM Standards for Public Playgrounds.

B. Product Certifications - The Wood Fiber system shall be certified as meeting the U.S. Consumer Product Safety Commission's technical guidelines for playground surfacing as follows: When tested in accordance with suggested test method in Paragraph 1, 2, and 3, a surface should not impact a peak acceleration in excess of 200 g's to an instrumented ANSI head form dropped on a surface from the maximum estimated fall height. Copies of the testing procedures of the Wood Fiber system and results performed by an independent testing source, which demonstrates compliance with the C.P.S.C. guidelines, shall be provided. The Contractor shall provide the City with a Certificate of Insurance for product liability with the limit of liability of not less than $2,000,000 for the wood fiber supplied. The Wood Fiber system shall have a minimum warranty of one (1) year from date of installation against decay and biochemical degradation calling for replacement of defective materials during the guarantee period. Wood Fiber shall not be installed until after play equipment is installed.

C. Subgrade for play area shall be free of segregated material and shall have a relative compaction of not less than 85%. Subgrade shall be finish graded and sloped to drain to the play area catch basin at a 1-% minimum slope.

D. Weed Control shall conform to Section 35-6 of the Standard Specifications.

E. Geo-textile Fabric shall be placed on top of the prepared sub-grade as shown on the plans, so as not to allow any contact between the Wood Fiber and the sub-grade. Geo-textile Fabric shall be polyester. Fabric shall have a minimum thickness of 3/16". Fabric shall be non-woven, and shall be permeable and not act as a wicking agent.

F. Staples or Fasteners – Geo-textile fabric shall be held in place by the use of staples or fasteners along all corners and seams at approximately 10' O.C. or closer as required to hold Geo-textile fabric in place.

G. Installation of wood fiber shall be within forty-eight (48) hours after play equipment is installed. Wood Fiber shall be placed on top of the Geo-textile Fabric as shown on the plans. The Wood Fiber shall be uniform, level and compacted. Contractor shall thoroughly sprinkle wood fiber after installation and rolled with a partially filled lawn roller in all directions for compaction. The Wood Fiber shall be compacted to a 12" finished depth at the edges of play area at the time of final acceptance by the City. The depth of wood fiber in the center of the play area will be greater.

Payment shall be at the lump sum price bid, and shall include full compensation for furnishing all labor, material, tools, equipment and incidentals and for doing all work involved in completing Play Area Wood Fiber to Place as shown on the plans, as specified in these Special Provisions and as directed by the Landscape Architect.

Item No. 33 – Poured-in-Place Rubber Surfacing

This item shall consist of furnishing and installing Poured-in-Place Rubber Surfacing to depths per manufacturer's recommendations for the various fall heights in the play area as shown on the plans in conformance with these Special Provisions and the manufacturer's specifications.

A. Standards

1. All protective rubberized surfacing, shall meet ASTM F-1951 "Specification for Determination of Accessibility of Surface Systems Under and Around Playground Equipment".

B. Submittals Prior to the purchase of the rubber surfacing and within 10 days after award of contract, Contractor shall submit the following items to Engineer for review and approval. No materials for this section shall be purchased until such approval is granted. Incomplete submittals shall be returned without review.

C. Protective surfacing, poured-in-place rubber One pint sample of rubber granules showing color, manufacturer's test data identifying the critical height of material per specified base and wear course depths, and certification of compliance with ASTM F-1951 "Specification for Determination of Accessibility of Surface Systems Under and Around Playground Equipment" and ASTM F-1292, "specification for impact Attenuation of Surface Systems Under and Around Playground Equipment", current version.

D. Products

1. Poured-in-place rubber: Shall be SpectraTurf, or PlayBound as manufactured by Surface America, or approved equal. For SpectraTurf contact David Adams (916) 698-4257. For PlayBound contact Contact Chris Tait (707) 538-3800. For color and thickness see plans. Binder shall be aliphatic (U.V. stable). Play area surfacing shall be installed in accordance with details as shown on the plans.

2. Aggregate Base shall conform to section 10-7 and 17-1 of the standard specifications. Relative compaction of aggregate base shall be 95%. Depth shall be per plans.

E. Layout prior to commencing installation, Contractor shall stake layout of rubberized surfacing and request a review by the Landscape Architect. Contractor is responsible for adjusting layout as required.

Payment shall be at the lump sum price bid, and shall include full compensation for furnishing all labor, material, tools, equipment and incidentals and for doing all work involved in completing Poured-in-Place Rubber Surfacing as shown on the plans, as specified in these Special Provisions and as directed by the Landscape Architect.

Item No. 34 – Bench with Back to Install

This item shall consist of furnishing and installing a Bench as shown on the plans in conformance with these Special Provisions and the manufacturer's specifications.

A. Bench shall be per Plans, or approved equal, and installed per the manufacturer's instructions.

B. Anchor Bolts shall be installed as specified by the manufacturer and shall be provided by the Contractor.

C. **ALL Bolts** shall be installed as specified by the manufacturer and shall be provided by the Contractor. All exposed bolts shall be cut to 3 exposed threads and all anchor bolts/ nuts shall be tack welded and all remaining exposed bolts/ nuts shall be tightened and secured with Loctite Adhesive, red 271 for a permanent installation.

Payment shall be made at the unit price bid, and shall include full compensation for furnishing all labor, materials, tools, equipment and incidentals and for doing all work involved in completing Bench with Back to Install as shown on the plans, as specified in these Special Provisions and as directed by the Landscape Architect.

Item No. 35 – Bench without Back to Install

This item shall consist of furnishing and installing a Bench without back as shown on the plans in conformance with these Special Provisions and the manufacturer's specifications.

A. Bench shall be per Plans, or approved equal, and installed per the manufacturer's instructions.

B. Anchor Bolts shall be installed as specified by the manufacturer and shall be provided by the Contractor.

C. **ALL Bolts** shall be installed as specified by the manufacturer and shall be provided by the Contractor. All exposed bolts shall be cut to 3 exposed threads and all anchor bolts/ nuts shall

be tack welded and all remaining exposed bolts/ nuts shall be tightened and secured with Loctite Adhesive, red 271 for a permanent installation.

Payment shall be made at the unit price bid, and shall include full compensation for furnishing all labor, materials, tools, equipment and incidentals and for doing all work involved in completing Bench without Back to Install as shown on the plans, as specified in these Special Provisions and as directed by the Landscape Architect.

Item No. 36 – Picnic Table to Install

This item shall consist of furnishing and installing a Picnic Table as shown on the plans in conformance with these Special Provisions and the manufacturer's specifications.

A. Picnic Table shall be per Plans, or approved equal, and installed per the manufacturer's instructions.

B. Anchor Bolts shall be installed as specified by the manufacturer and shall be provided by the Contractor.

C. **ALL Bolts** shall be installed as specified by the manufacturer and shall be provided by the Contractor. All exposed bolts shall be cut to 3 exposed threads and all anchor bolts/ nuts shall be tack welded and all remaining exposed bolts/ nuts shall be tightened and secured with Loctite Adhesive, red 271 for a permanent installation.

Payment shall be made at the unit price bid, and shall include full compensation for furnishing all labor, materials, tools, equipment and incidentals and for doing all work involved in completing Picnic Table to Install as shown on the plans, as specified in these Special Provisions and as directed by the Landscape Architect.

Item No. 37 - Trash Receptacles to Install

This item shall consist of furnishing and installing a Trash Receptacles as shown on the plans in conformance with these Special Provisions and the manufacturer's specifications.

A. Trash Receptacles shall be per Plans, or approved equal, and installed per the manufacturer's instructions.

B. Anchor Bolts shall be installed as specified by the manufacturer and shall be provided by the Contractor.

C. **ALL Bolts** shall be installed as specified by the manufacturer and shall be provided by the Contractor. All exposed bolts shall be cut to 3 exposed threads and all anchor bolts/ nuts shall be tack welded and all remaining exposed bolts/ nuts shall be tightened and secured with Loctite Adhesive, red 271 for a permanent installation.

Payment shall be made at the unit price bid, and shall include full compensation for furnishing all

labor, materials, tools, equipment and incidentals and for doing all work involved in completing Trash Receptacles to Install as shown on the plans, as specified in these Special Provisions and as directed by the Landscape Architect.

Item No. 38 – Group Grill to Install

This item shall consist of furnishing and installing a Group Grill as shown on the plans in conformance with these Special Provisions and the manufacturer's specifications.

A. Group Grill shall be per Plans, or approved equal, and installed per the manufacturer's instructions.

B. Anchor Bolts shall be installed as specified by the manufacturer and shall be provided by the Contractor.

C. **ALL Bolts** shall be installed as specified by the manufacturer and shall be provided by the Contractor. All exposed bolts shall be cut to 3 exposed threads and all anchor bolts/ nuts shall be tack welded and all remaining exposed bolts/ nuts shall be tightened and secured with Loctite Adhesive, red 271 for a permanent installation.

Payment shall be made at the unit price bid, and shall include full compensation for furnishing all labor, materials, tools, equipment, and incidentals and for doing all work involved in completing Group Grill to Install as shown on the plans, as specified in these Special Provisions and as directed by the Landscape Architect.

Item No. 39 – Park Rule Signs to Install

This item shall consist of proving materials and installing various Park Rules Signs as shown on the Plans in conformance with these Special Provisions and the City Standard Specifications and Standard Drawing No. T-270.

A. Sign shall provided by the City, for installation by the contractor. The top of the steel park sign will be installed flush with the top of the steel post and shall be installed as shown on Standard Drawing T-270, Standard Sign Center mount.

B. Posts shall be standard weight galvanized steel, Schedule 40, 2" diameter size pipe with pipe cap.

C. Sign clamps shall be two steel Single 2" ID U-Bracket Clamps.

D. Concrete Footings shall be Portland Cement Concrete Class "D", conforming to Section 10-5 of the Standard Specifications and as shown on Standard Drawing T-270.

E. Stainless Steel Nuts & Bolts shall be vandal resistant bolts with the nuts tack welded on to reduce theft.

Payment shall be made at the lump sum price bid, and shall include full compensation for furnishing all labor, materials, tools, equipment, and incidentals and for doing all work involved in Park Rules Signs to Install as shown on the plans, as specified in these Special Provisions and as directed by the Landscape Architect.

Item No. 40 – Concrete Park Sign to Install

This item shall consist of furnishing and installing a Concrete Park Sign with Concrete Base and aggregate foundation as shown on the plans in conformance with these Special Provisions and the manufacturer's specifications.

A. Concrete Sign and Base shall be made of concrete mix, to include 8.5 sacks of Portland Cement per yard with a maximum rock size of ¾".

B. The coloring agent selected by the City of Sacramento shall be pure mineral oxides and shall be mixed integrally with the cement. The contractor shall request Outdoor Creations to use the City standard tan concrete color for the park sign.

C. The concrete sign and footing must attain a minimum compressive strength of 7,000 PSI.

D. The concrete shall be reinforced at a minimum #4 Rebar. The rebar shall be at a minimum 18" grid pattern throughout the interior of the sign. The concrete footing shall have a minimum of two rows of #4 rebar running parallel to the face of the footing. All formed surfaces and edges are fully rounded and smooth finished.

F. Concrete graffiti-resistant sealer finish must be applied to all exposed surfaces. There must be a minimum of three (3) coat of sealer applied to the sign and footing prior to installation.

G. Concrete signs must be made of one solid piece of concrete. The concrete base must also be one solid piece of concrete.

H. The city seal will be mounted on a 12" diameter circle using 12-gauge aluminum. The city seal will be mounted on the concrete sign with two keyed bolts to prevent theft. The City seal will be provided by the City of Sacramento to the contractor. The area where the seal is place on the concrete sign shall be recessed by a minimum of half inch and have a flat beveled edging, at a forty-five (45°) degrees.

I. The sign lettering size will very depending on how many words are on the park sign. All lettering shall be recessed from the surface of the concrete sign, at minimum of half inch. Edges on the sign letters shall not be round. The lettering for the park name shall be the largest print, all upper case, painted hunter green, and the style shall be Goudy Bold. The "City of Sacramento" lettering shall be smaller than the park name, be upper and lower case text, painted hunter green, and the style shall be Goudy Bold. The "Department of Parks and Recreation" lettering shall be smaller print than the "City of Sacramento," be upper and lower case text, painted hunter green, and the style shall be Goudy Medium. Contractor shall submit a mockup of the sign and receive written approval for the City representative prior to ordering the concrete sign and concrete base.

J. The sign vendor will provide to the contractor two (2), 60" in length by 2" diameter galvanized steel pipes, schedule 40. The pipes will be installed vertically into the base, through the footing, and into the sign. Sign manufacture shall supply detail. The signs and footing shall be epoxies to one another as well as having the footing epoxies to the concrete base.

K. The Contractor shall have the means to transport the concrete sign and footing to the park site. The sign and footing will be placed on top of a aggregate base footing, provided by the contractor. The City of Sacramento is not responsible for any damage to the sign during the transportation or installation of the sign and base. The City of Sacramento will only be responsibility for the sign & base after the final acceptance walkthrough.

L. Foundation shall be as shown on the plans. Aggregate Base shall conform to Section 10-7 and 17-1 of the Standard Specifications and have a relative compaction of 90%.

M. Vendor Information: The sign shall be by Outdoor Creations Inc., or approved equal. Outdoor Creations Inc. Representative Contact, Chad Smith: Phone (530) 337-6774 , Fax (530) 337-6675. Allow 90 days from the time of order.

N. Acceptance of Sign - The City of Sacramento is not responsible for any damage to the park sign during the transportation or installation of the sign and base. The City of Sacramento will only be responsibility for the sign & base after the final acceptance walkthrough. The contractor may wrap the park sign with black plastic until final acceptance by the City.

Payment shall be made at the unit price bid, and shall include full compensation for furnishing all labor, materials, tools, equipment and incidentals, and for doing all work involved in Concrete Park Sign to Install as shown on the plans, as specified in these Special Provisions and as directed by the Landscape Architect.

Item No. 41 - Electrical System to Install

This item shall consist of furnishing and installing electrical as shown on the plans in conformance with section 34 of the Standard Specifications and these Special Provisions.

A. ELECTRICAL WORK – GENERAL REQUIREMENTS

GENERAL CONDITIONS:

The Requirements of General Conditions and Special Conditions apply to Work of this Section as if fully repeated herein.

Drawings and specifications take precedence when they call for materials or construction methods of better quality or larger size than required by codes laws, rules or regulations.

The Requirements of this Section apply to all Work of Division 16.

WORK INCLUDED:

Provide a complete working installation with all material and equipment as shown and specified. The Contract Documents do not undertake to show or specify every item to be provided. When an item not shown or specified is necessary for proper operation of equipment shown or specified, provide the item, which will allow the system to function properly, at no increase in Contract Price.

Make electrical connections for equipment furnished as part of Work of other Sections.

QUALITY ASSURANCE:

Requirements of Regulatory Agencies:

1. Nothing in the Contract Documents shall be construed to permit Work not conforming to applicable laws, ordinances, rules or regulations.
2. When the Contract Documents exceed requirements of applicable laws, ordinances, rules or regulations, Contract Documents shall take precedence.
3. It is not the intent of the Contract Documents to repeat requirements of Codes except where necessary for completeness or clarity.
4. All installed or connected equipment shall be labeled or certified for its use by a nationally recognized testing laboratory. Where equipment is not furnished with a factory installed label or certification, it shall be the responsibility of the contractor to obtain and pay for the necessary tests and approvals.

SUBMITTALS:

General:

5. Submit Shop Drawings and supplemental data for all materials and equipment specified in all Sections of this Division, in accordance with the Requirements of Division 1, and as specified hereinafter.
6. Submittals shall have materials proposed for the project identified. Catalog cuts containing unidentified materials or superfluous information will not be accepted.
7. All submittals shall be reviewed by the Contractor and stamped with his approval prior to submitting to the Architect. Contractor shall indicate in writing any deviation in submittals from requirement of Contract Documents.
8. Forward all submittals to the Architect, together, at one (1) time. Individual or incomplete submittals will not be acceptable. Only one (1) request for substitution will be considered on each item of materials or equipment.
9. Wherever catalog numbers and specific brands or trade names, not preceded by the designation "equal to", or followed by the designations "or equal", "or accepted equal", or "or approved equal", are mentioned in these Specifications or Drawings, no substitutions will be accepted.
    - Identify each item by manufacturer, brand, trade name, number, size, rating, or whatever other data is necessary to properly identify and check materials and equipment. The words "as specified" will not be sufficient identification.
    - Identify each submittal item by reference to Specification Section paragraph in which the item is specified, or Drawing and Detail number.
    - Organize submittals in binders, in the same sequence as they appear in Specification Sections, article or paragraphs.
    - Shop Drawings shall show physical arrangement, construction details, finishes, materials used in fabrication, provisions for conduit entrance, access requirements for installation and maintenance, physical size, electrical

characteristics, foundation and support details, and weight. Reuse of the Contract Drawings as Shop Drawings will not be acceptable.

- Specifically show, by drawn detail or note, that equipment complies with each specified requirements of the Contract Documents.
- Drawings shall be to scale and dimensioned (except wiring diagrams need not be to scale), and may be prepared by a vendor but shall be submitted as instruments of Contractor, thoroughly checked and stamped by Contractor before submission to Architect for review.
- Catalog cuts and published material may be included to supplement scale drawings.
- Internal wiring diagrams of equipment shall show wiring as actually furnished for this project, with all optional items clearly identified as included or excluded. Clearly identify external wiring connections. Identify and obliterate superfluous material.
- Acceptance of a substitute is not to be considered a release from the Specifications. Correct any deficiencies in an item, even though approved, at Contractor's expense.
- Be responsible for installation of approved substitution. Make any changes required for installation of approved substituted equipment at no increase in Contract Sum.

PROJECT RECORD DOCUMENTS:

Upon completion of Work, furnish Architect with complete sets of reproducible plans upon which shall be shown all Work installed under Contract. Drawings shall include actual locations of outlets, conduit and wire sizing as well as routing.

All symbols and designations used in preparing Record Drawings shall match those used in Contract Drawings.

Maintain an up to date set of electrical drawings during the course of construction.

PRODUCT DELIVERY, STORAGE, AND HANDLING:

Identify materials and equipment delivered to site to permit check against materials list and Shop Drawings.

Protect from loss or damage. Replace lost or damaged materials and equipment with new at no increase in Contract Sum.

PROJECT EXAMINATION AND CONDITIONS:

Examine project; verify dimensions and locations against Drawings and become informed of all conditions under which Work is to be done before submitting proposals.

Information shown relative to services is based upon available records and data but shall be regarded as approximate only. Make deviations found necessary to conform with actual locations and conditions with no increase in Contract Sum. Verify locations and elevation of utilities prior to commencement of excavation for new underground installations.

Exercise extreme care in excavating near existing utilities to avoid any damage thereto; be responsible for any damage caused by such operations.

DRAWINGS AND COORDINATION WITH OTHER WORK:

Drawings:

1 For purposes of clarity and legibility, Drawings are essentially diagrammatic to the extent that many offsets, bends, special fittings, and the exact locations of items are not shown, unless specifically dimensioned.

2 Exact routing of wiring and locations of outlets, panels, and other items, shall be governed by structural conditions, and materials and equipment already in place. Use data in the Contract Documents. In addition, the owner reserves the right, at no increase in Contract Sum, to make any reasonable change in locations of exposed electrical items, to group them into orderly relationships and/or increase their utility.

Coordination:

3 Work out all "tight" conditions involving Work of this Division and Work of other Divisions in advance of installation. Provide additional Work necessary to overcome "tight" conditions, at no increase in Contract Sum.

4 Differences of disputes concerning coordination, interference or extent of Work between Divisions shall be decided by General Contractor. His decision, if consistent with Contract Document requirements, shall be final.

5 Provide adequate working space around electrical equipment in compliance with all applicable codes.

6 Size all feeders (conduit and wiring), motor starters, overload protection and circuit breakers to suit horsepower of motors or wattages of equipment furnished as part of the Work of the various Sections of the Specifications. In no case shall feeders and branch circuits (conduit and wiring) and circuit breakers be of smaller capacities or sizes than those shown or specified.

Equipment Rough-In:

7 Rough-in locations shown on Electrical Drawings for equipment furnished by the Owner and for equipment furnished under other Divisions are approximate only. Obtain exact rough-in locations from the following sources:
From Shop Drawings for Contractor-furnished and installed equipment.
From the Architect for Owner-furnished, Contractor-installed equipment.

8 Verify electrical characteristics of equipment before starting rough-in.

9 Unless otherwise shown or specified, equipment which requires electrical connection shall be installed as part of the Work of the Division in which specified. Internal components shall be wired to a single point with wiring in raceway direct connection (hardwired) to building electrical system or internal wiring and connections with cord and plug for receptacle connection to building wiring.

10 Unless otherwise shown or specified, provide direct raceway and conductor connections from building wiring system to equipment terminals for direct connected equipment which is Contractor-furnished

and Contractor-installed, Owner-furnished and Contractor-installed, and for existing equipment relocated by the Contractor.

11 Provide disconnect switches where shown or required by Codes for direct-connected equipment.

GUARANTEE:

Provide one year guarantee in accordance with and in form required under Division 1. Repair or replace as may be necessary any defective work, material or part with no increase in Contract Sum including repair or replacement of other Work, furnishing, equipment or premises caused by such repair or replacement of defective work.

12 Where other guarantee periods or requirements are called for in other sections of the contract documents, they shall take precedence over the requirements of Division 1.

PRODUCTS MATERIALS:

Identify materials and equipment by manufacturer's name and nameplate data. Remove unidentified materials and equipment from site.

Equipment specified by manufacturer's number shall include all accessories, controls and other components, listed in catalog as standard with equipment. Furnish optional or additional accessories as specified. All materials shall be UL labeled and in accordance with NEMA Standards.

Where no specific make of material or equipment is mentioned, any high quality product of a reputable manufacturer may be used, provided it conforms to requirements of system and meets with Architect's acceptance.

Conflicts between Plans and Specifications, exclusive of the General Conditions of the Contract, the most stringent and higher quality requirement shall govern.

If the Contract Documents are not complete as to any detail such as accessories or hardware, of a required construction system or with regard to manner of installing of parts, materials, or equipment, but there exists an accepted trade standard for good and workmanlike construction, such detail or accessories shall be deemed to have been implicitly required by the Contract Documents in accordance with such standard.

Equipment and material damaged during transportation, installation, or operation will be considered as totally damaged. Replace with new. Variance from this will be permitted only with written acceptance.

Provide an authorized representative to constantly supervise the Work of this Division and to check all materials prior to installation for conformance with the Contract Documents.

Do not use equipment exceeding dimensions indicated for equipment, or arrangements that reduce required clearances, or exceed specified maximum dimensions.

FLASH PROTECTION - Electrical equipment including switchboards, panelboards, disconnect switches, etc. which are likely to require examination, adjustment or servicing while energized

shall be field marked to warn of potential electric arch flash hazards per CEC Article 110.16. Marking shall be a pre-printed label which references NFPA 70E.

- EXECUTION

1. INSTALLATION:

Manufacturer's Directions: Follow manufacturer's directions where manufacturers of articles used furnish directions covering points not specified or shown.

Equipment: Accurately set and level, neatly place support and anchor properly.

Assemble together all equipment which requires assembling including Contractor-supplied bussing, internal wire connections where required; connect all incoming conduit, cable and wires properly; and adjust and make ready for service electrical equipment and material required by this Contract.

All Work shall be done in orderly, workmanlike manner in accordance with NECA Standard of Installation and present neat appearing installation when completed.

Provide concrete foundations or pads for floor mounted electrical equipment where indicated on the drawings.

13 Install minimum concrete pads or as indicated. Other pad dimensions shall be as required to accommodate the equipment installed.
14 Use 3,000 PSI concrete.
15 Chamfer top edges ¾".
16 Make all faces smooth.
17 Set anchor bolts for equipment.

2. NORMAL CONTINGENCIES:

Protection: In performance of Work, protect existing facility and protect Work of other Sections as well as Work of this Section from damage.

18 Where existing conduits which are shown to be revised or which will be essential to functioning of particular system are cut or exposed due to construction changes, new connections shall be made in most expeditious manner as directed or shown. Where wiring is involved, new wires shall be "pulled-in" between nearest available accessible reused outlets. In all cases where new wires are required, shown, or specified to be installed in existing conduits, if same cannot be installed, new conduits shall be provided therefore as directed.
19 Attention is called to the fact that all new conduit, wiring, and apparatus shown or specified shall be connected to existing systems so as to function as complete units.

3. TESTING AND ADJUSTING:

Furnish all labor and test equipment required for the Work of this Division. Testing work is defined as that work necessary to establish that equipment has

been properly assembled, connected, and checked to verify that intent and purpose of the drawings, specifications, manufacturer's instruction manuals, and directions of Architect have been accomplished in satisfactory manner.

Provide field tests to verify component compliance with Specifications, including but not limited to adjusting, calibrating, and setting circuit breakers, relays, timers, etc.

After completion of testing and adjustment, operate the different systems and equipment under normal working conditions and show specified performance. If, in the opinion of the Architect, performance of equipment or systems is not in accordance with Contract Document or submitted data, alter or replace equipment at no increase in Contract Sum.

Do not allow or cause any Work installed hereunder to be covered up or enclosed before it has been inspected and accepted. Should any Work be enclosed or covered up before it has been approved, uncover such Work, and after it has been inspected and approved, make all repairs necessary to restore Work of Others to condition in which it was found at time of cutting, all at no increase in Contract Sum.

At completion of Work provide written certification that all Systems are functioning properly without defects.

4. CLEANING AND PAINTING:

Refinish Work supplied with final finish as part of the Work of this Division if damaged as part of the Work of this Division to satisfaction of Architect.

Clean out and remove from site all surplus materials and debris resulting from this Work, including surplus excavated materials.

B. SECTION 16060 - GROUNDING AND BONDING FOR ELECTRICAL SYSTEMS

GENERAL SUMMARY

Section Includes:

1. Rod electrodes.
2. Wire.
3. Mechanical connectors.

REFERENCES

Institute of Electrical and Electronics Engineers:

4. IEEE 142 - Recommended Practice for Grounding of Industrial and Commercial Power Systems.

International Electrical Testing Association:

5. ANSI/NETA ATS - Acceptance Testing Specifications for Electrical Power Equipment and Systems.

Part 3, Title 24, - California Electrical Code (CEC).

SYSTEM DESCRIPTION

Grounding systems use the following elements as grounding electrodes:

6. Rod electrode.

SUBMITTALS

Product Data: Submit data on grounding electrodes and connections.

Manufacturer's Installation Instructions: Submit for active electrodes.

CLOSEOUT SUBMITTALS

Project Record Documents: Record actual locations of components and grounding electrodes.

QUALITY ASSURANCE

Provide grounding materials conforming to requirements of NEC, IEEE 142, and UL labeled.

QUALIFICATIONS

Manufacturer: Company specializing in manufacturing Products specified in this section with minimum three years experience.

DELIVERY, STORAGE, AND HANDLING

Accept materials on site in original factory packaging, labeled with manufacturer's identification.

Protect from weather and construction traffic, dirt, water, chemical, and mechanical damage, by storing in original packaging.

Do not deliver items to project before time of installation. Limit shipment of bulk and multiple-use materials to quantities needed for immediate installation.

PRODUCTS

ROD ELECTRODES

Product Description:

7. Material: Copper.
8. Diameter: 3/4 inch.
9. Length: 10 feet.

Connector: Connector for exothermic welded connection.

WIRE

Material: Stranded copper.

Grounding Electrode Conductor: Copper conductor insulated if in conduit or above grade exposed, bare if direct buried.

Bonding Conductor: Copper conductor insulated.

MECHANICAL CONNECTORS

Description: Bronze connectors, suitable for grounding and bonding applications, in configurations required for particular installation.

EXECUTION

3.1 EXAMINATION

Verify final backfill and compaction has been completed before driving rod electrodes.

3.2 PREPARATION

Remove paint, rust, mill oils and surface contaminants at connection points.

3.3 INSTALLATION

Install rod electrodes at locations as indicated on Drawings. Install additional rod electrodes to achieve specified resistance to ground.

Install grounding and bonding conductors concealed from view.

Equipment Grounding Conductor: Install separate, insulated conductor within each feeder and branch circuit raceway. Terminate each end on suitable lug, bus, or bushing.

Permanently attach equipment and grounding conductors prior to energizing equipment.

3.4 FIELD QUALITY CONTROL

Provide visual and mechanical inspection in accordance with NETA ATS, 7.13.1.

C. BUILDING WIRE AND CABLE

GENERAL SUMMARY

Section includes building wire and cable and wiring connectors and connections.

REFERENCES

International Electrical Testing Association:

10. ANSI/NETA ATS – 2009 Acceptance Testing Specifications for Electrical Power Equipment and Systems.

NECA (National Electrical Contractors Association) - Standard of Installation.

ANSI/NFPA 70 – National Electrical Code (NEC).

Part 3, Title 24, - California Electrical Code (CEC).

Underwriters Laboratories, Inc. (UL).

11. UL-83, UL-44 – Thermoplastic-Insulated Wire and Cables.

SYSTEM DESCRIPTION

Product Requirements: Provide products as follows:

12. Stranded conductor for feeders and branch circuits 10 AWG and smaller.
13. Stranded conductors for control circuits.
14. Conductor not smaller than 12 AWG for power and lighting circuits.

Wiring Methods: Provide the following wiring methods:

15. Exterior Locations: Use only building wire Type XHHW-2 insulation, in raceway.
16. Underground Locations: Use only building wire Type XHHW-2 insulation, in raceway.

DESIGN REQUIREMENTS

Conductor sizes are based on copper.

SUBMITTALS

Product Data: Submit for building wire.

CLOSEOUT SUBMITTALS

Project Record Documents: Record actual locations of components and circuits.

QUALIFICATIONS

Manufacturer: Company specializing in manufacturing products specified in this section with minimum three years experience.

FIELD MEASUREMENTS

Verify field measurements are as indicated on Drawings.

COORDINATION

Where wire and cable destination is indicated and routing is not shown, determine routing and lengths required.

Determine required separation between wire, cable and other work. Determine cable routing to avoid interference with other work.

Wire and cable routing indicated is approximate unless dimensioned.

PRODUCTS

BUILDING WIRE

Manufacturers:

17. Diamond Wire & Cable Co.
18. Essex Group Inc.
19. General Cable Co.
20. Approved equal.

Product Description: Single conductor insulated wire.

Conductor: Copper.

Plastic Tape:

Black 7 mil thick general purpose electrical tape, Scotch 33 plus or equal.

Insulating Resin:

Use two part liquid epoxy resin with resin and catalyst in premeasured, sealed mixing pouch. Scotchcast 4 or equivalent.

Reducing Adapters:

Burndy, Thomas and Betts or approved equal.

WIRING CONNECTORS

Bolted pressure connectors: Cast bronze compression bolts designed for parallel taps, tees, crosses or end-to-end connections.

Insulated spring wire connectors: Multi-part construction incorporating a steel spring enclosed with a color coded outer thermoplastic shell.

Compression type termination lugs: Tin plated copper high-compression type lugs for installation with hand or hydraulically operated crimping tools and dies. Provide 2-hole lugs for size #4/0 AWG and larger wire where terminated to bus bars.

EXECUTION

3.5 EXAMINATION

Verify raceway installation is complete and supported.

3.6 PREPARATION

Completely and thoroughly swab raceway before installing wire.

3.7 INSTALLATION

Route wire and cable to meet Project conditions.

Neatly train and lace wiring inside boxes, equipment, and panelboards.

Special Techniques--Building Wire in Raceway:

21. Pull conductors into raceway at same time.
22. Install building wire 4 AWG and larger with pulling equipment.

Special Techniques - Wiring Connections:

23. Clean conductor surfaces before installing lugs and connectors.
24. Make splices, taps, and terminations to carry full ampacity of conductors with no perceptible temperature rise.
25. Tape uninsulated conductors and connectors with electrical tape to 150 percent of insulation rating of conductor.
26. Install split bolt connectors for copper conductor splices and taps, 6 AWG and larger.
27. Install solderless tool applied pressure connectors and lugs for copper conductor splices and taps, 8 AWG and larger.

28. Install insulated spring wire connectors with plastic caps for copper conductor splices and taps, 10 AWG and smaller.
29. Encapsulate below grade splices at outlet, pull and junction boxes with specified insulating resin kits. Make all splices watertight.
30. Install waterproof wire connectors with plastic caps for copper conductor splices and taps, 10 AWG and smaller in outdoor or wet locations.
31. Where oversized cables are used to accommodate voltage drop, whether a single or parallel feeder, provide appropriate reducing adapter and conductors for termination.

WIRE COLOR

General

32. For wire sizes 10 AWG and smaller, install wire colors in accordance with the following:
    Black and red for single phase circuits at 120/240 volts.
33. For wire sizes 8 AWG and larger, identify wire with colored tape at terminals, splices and boxes. Colors are as follows:
    Black and red for single phase circuits at 120/240 volts.

Neutral Conductors: White. When two or more neutrals are located in one conduit, individually identify each with proper circuit number.

Branch Circuit Conductors: Install three or four wire home runs with each phase uniquely color coded.

Feeder Circuit Conductors: Uniquely color code each phase.

Ground Conductors:

34. For 6 AWG and smaller: Green.
35. For 4 AWG and larger: Identify with green tape at both ends and visible points including junction boxes.

FIELD QUALITY CONTROL

Provide visual and mechanical inspection in accordance with NETA ATS, 7.3.2.1.

D. RACEWAY AND BOXES FOR ELECTRICAL SYSTEMS

GENERAL SUMMARY

Section includes conduit and tubing, surface raceways, wireways, outlet boxes, pull and junction boxes, and handholes.

REFERENCES

American National Standards Institute:

36. ANSI C80.1 - Rigid Steel Conduit, Zinc Coated.

National Electrical Manufacturers Association:

37. NEMA 250 - Enclosures for Electrical Equipment (1000 Volts Maximum).

38. NEMA FB 1 - Fittings, Cast Metal Boxes, and Conduit Bodies for Conduit and Cable Assemblies.
39. NEMA OS 1 - Sheet Steel Outlet Boxes, Device Boxes, Covers, and Box Supports.
40. NEMA RN 1 - Polyvinyl Chloride (PVC) Externally Coated Galvanized Rigid Steel Conduit and Intermediate Metal Conduit.
41. NEMA TC 2 - Electrical Polyvinyl Chloride (PVC) Tubing and Conduit.
42. NEMA TC 3 - PVC Fittings for Use with Rigid PVC Conduit and Tubing.

NFPA 70 – National Electrical Code (NEC). Part 3, Title 24, - California Electrical Code (CEC).

SYSTEM DESCRIPTION

Raceway and boxes located as indicated on Drawings, and at other locations required for splices, taps, wire pulling, equipment connections, and compliance with regulatory requirements. Raceway and boxes are shown in approximate locations unless dimensioned. Provide raceway to complete wiring system.

Outdoor Locations, Above Grade: Provide rigid steel conduit. Provide cast metal outlet, pull, and junction boxes.

SUBMITTALS

Product Data: Submit for the following:

43. Metallic conduit.
44. Nonmetallic conduit.
45. Raceway fittings.
46. Conduit bodies.
47. Pull and junction boxes.

Manufacturer's Installation Instructions: Submit application conditions and limitations of use stipulated by Product testing agency specified under Regulatory Requirements. Include instructions for storage, handling, protection, examination, preparation, and installation of Product.

DELIVERY, STORAGE, AND HANDLING

Protect conduit from corrosion and entrance of debris by storing above grade. Provide appropriate covering.

Protect PVC conduit from sunlight.

COORDINATION

Coordinate Work of this Division and Work of other Divisions in advance of installation. Provide additional Work to overcome tight conditions at no increase in Contract Sum.

Coordinate installation of outlet boxes for equipment specified in other divisions.

PRODUCTS

METAL CONDUIT

Rigid Steel Conduit: ANSI C80.1.

Fittings and Conduit Bodies: NEMA FB 1. Fittings shall be steel/malleable iron with threaded fittings. Use insulated metallic bushings with lug where ground connections are required. Use plastic bushing for non-bonding applications.

PVC COATED METAL CONDUIT

Product Description: NEMA RN 1; rigid steel conduit with external PVC coating, 40 mil thick.

Fittings and Conduit Bodies: NEMA FB 1; steel fittings with external PVC coating to match conduit.

NONMETALLIC CONDUIT

Product Description: NEMA TC 2; Schedule 40 PVC.

Fittings and Conduit Bodies: NEMA TC 3.

OUTLET BOXES

Cast Boxes: NEMA FB 1, Type FD, cast feralloy. Furnish gasketed cover by box manufacturer. Furnish threaded hubs.

Wall Plates for Unfinished Areas: Furnish gasketed cover.

PULL AND JUNCTION BOXES

Sheet Metal Boxes: NEMA OS 1, galvanized steel.

Surface Mounted Cast Metal Box: NEMA 250, Type 4; flat-flanged, surface mounted junction box:

48. Material: Galvanized cast iron.
49. Cover: Furnish with ground flange, neoprene gasket, and stainless steel cover screws.

Concrete composite Handholes: Die-molded, concrete composite hand holes:

50. Cable Entrance: Pre-cut cable entrance at center bottom of each side.
51. Extension: 12" reinforced concrete below box.
52. Cover: Concrete composite cover with nonskid finish. Covers shall be marked "ELECTRIC", "SIGNAL", "GROUND' or as indicated on drawings.

EXECUTION

3.8 EXAMINATION

Verify outlet locations and routing and termination locations of raceway prior to rough-in.

3.9 INSTALLATION

Ground and bond raceway and boxes in accordance with Section 16060.

Arrange raceway and boxes to maintain headroom and present neat appearance.

3.10 INSTALLATION - RACEWAY

Raceway routing is shown in approximate locations unless dimensioned. Route to complete wiring system.

Provide flexible conduit connections of short length to equipment subject to vibration and all motors; twenty-four inches maximum.

Cut conduit square using saw or pipe cutter; de-burr cut ends.

Join nonmetallic conduit using cement as recommended by manufacturer. Wipe nonmetallic conduit dry and clean before joining. Apply full even coat of cement to entire area inserted in fitting. Allow joint to cure for minimum 20 minutes.

Install conduit hubs or sealing locknuts to fasten conduit to sheet metal boxes in damp and wet locations and to cast boxes.

Install no more than equivalent of four 90 degree bends between boxes. Install conduit bodies to make sharp changes in direction, as around beams.

Avoid moisture traps; install junction box with drain fitting at low points in conduit system.

Install suitable pull string or cord in each empty raceway except sleeves and nipples.

Install suitable caps to protect installed conduit against entrance of dirt and moisture.

Close ends and unused openings in wireway.

3.11 INSTALLATION - BOXES

Support boxes independently of conduit.

3.12 INSTALLATION CONCRETE COMPOSITE HANDHOLES

Install boxes flush with finished grade or surface material.

Provide hold down bolts for all covers.

Provide minimum 12" depth of crushed rock or pea gravel below boxes for drainage.

3.13 ADJUSTING

Install knockout closures in unused openings in boxes.

3.14 CLEANING

Clean interior of boxes to remove dust, debris, and other material.

Clean exposed surfaces and restore finish.

E. UNDERGROUND CONDUIT SYSTEM

GENERAL CONDITIONS:

The Requirements of General Conditions and Special Conditions apply to Work of this Section as if fully repeated herein.

WORK INCLUDED:

Encase and install underground power and signal system feeder conduits outside foundation line as specified or as shown. This shall include, but not be limited to, all excavation, draining trenches, sloping of conduit, backfilling, compacting, and removal of excess dirt.

PRODUCTS MATERIALS

Conduit:

1. Nonmetallic Conduit: NEMA TC 2 Schedule 40 PVC.
2. Rigid steel Conduit: ANSI C80.5.
3. PVC coated metal Conduit: NEMA RN 1; rigid steel conduit with external PVC coating, 40 mil thick.

Interlocking plastic module spaces which provide three inch (3") spacing between conduits shall be used to hold ducts in place before and during sand envelope installation.

Couplings and Joint Cement: As recommended by manufacturer and compatible with conduit used. Couplings shall fit conduit securely.

Adapters Necessary for Transition from Metallic Conduit to Non-metallic Conduit: Same manufacturer as non-metallic conduit used.

Manufacture conduit in nominal Iron Pipe Size (IPS) as indicated on Drawings.

Underground warning tape: 6 inch wide, yellow polyethylene tape, with continuous black imprinting.

Conduit tape: 2 inch wide black 10 mil vinyl conduit wrap.

Liquid tape coating: Scotchkote® electrical coating or approved equal.

EXECUTION

3.15 EXCAVATION AND BACKFILLING:

A. Be responsible for all excavation, shoring, bracing, draining trenches, roadway cuts, repairing of finished surfaces, sloping of ducts toward pull hole, forming of conduit assembly and protective concrete envelope, backfilling, tamping and removal of excess earth. Make excavation in manner to provide uniform bearing for conduit bank.

B. After required tests and inspection, backfill ditch and tamp. First foot above conduit bank shall be hand backfilled with rock-free clean earth. Be responsible for any ditches that cave in. Tamp backfill as follows:

1. Roadways - ninety percent (95%)
2. Non-Traffic areas – ninety percent (90%)
3. Planter areas – eighty five percent (85%)

In asphalt or concrete paved areas, backfill only to sub-grade level. Minimum conduit depth of pipe crown shall be two feet (2') below finished or natural grade.

Restore all surfaces, roadways, walks, curbs, walls, existing underground installations, and other construction or improvements damaged by installation of Electrical Work, to original condition in an acceptable manner.

Maintain all warning signs, barricades, flares, and lanterns as required.

3.16 CONDUIT INSTALLATION:

Support conduit for entire length on undisturbed original earth.

A. Include spare conduits in conduit banks as indicated on drawing details.

B. Install no more that an equivalent of four 90 degree bends between boxes.

C. Minimum Radius Bends: As required by the C.E.C. for main electrical duct runs.

Encase all underground conduits in fine earth. Arrange conduit in conduit bank to give three inches (3") spacing vertically and horizontally between conduits placed every five feet (5') and minimum of three inch (3") thick sand envelope. All underground conduit runs shall have minimum of thirty inch (30") cover.

Join nonmetallic conduit using cement as recommended by manufacturer. Wipe nonmetallic conduit dry and clean before joining. Apply full even coat of cement to entire area inserted in fitting. Allow joint to cure for 20 minutes, minimum.

D. Firmly secure and tie down conduits and spacer assembly to prevent displacement or "floating" of conduits as concrete or backfill is placed. Leave no wood in encasement or backfill.

E. Waterproof all conduit joints according to manufacturer's recommendations. Seal ends of conduits entering building or pull boxes watertight.

F. Each conduit shall have an approved fire retardant pull rope before and after cable is installed and in all spare conduits, and shall be capped at pull hole.

G. Surfaces upon which concrete is to be placed shall be free of standing water, mud, and debris. Moisten absorptive surfaces against which concrete is to be placed.

H. Place concrete only in presence of Project Coordinator.

I. Provide vinyl conduit wrap around rigid steel conduits where passing thru concrete slab.

J. Provide underground warning tape for all feeder and communication system conduits. Install tape 8 inches below finished grade.

K. Use suitable caps to protect installed conduit against entrance of dirt and moisture.

3.17 CONCRETE COMPOSITE HANDHOLE INSTALLATION

A. Provide minimum 12″ depth of crushed rock or pea gravel below boxes for drainage.

B. Covers shall be marked "ELECTRIC", "SIGNAL", "GROUND' or as indicated on drawings.

C. Install boxes flush with finished grade or surface material.

D. Provide hold down bolts for all covers.

F. ELECTRICAL UTILITY SERVICES

GENERAL SUMMARY

Section includes arrangement with Utility Company for permanent electric service; payment of Utility Company charges for service; service provisions; and utility metering equipment.

SYSTEM DESCRIPTION

Utility Company: SMUD

System Characteristics: 120/240 volts, single phase, three- wire, 60 Hertz.

Service Entrance: Underground.

Underground Service Provisions: Underground service entrance to building service entrance equipment.

A. Utility Raceway Connection: At Utility Company's pad-mounted transformer.
B. Utility Service-Entrance Conductor Connection: At Utility Company's pad-mounted transformer.

QUALITY ASSURANCE

Perform Work in accordance with Utility Company written requirements.

Maintain one copy of each document on site.

FIELD MEASUREMENTS

Verify field measurements as indicated on Utility Company drawings.

COORDINATION

Coordinate with utility company, relocation of overhead or underground lines interfering with construction. Where power lines are to be relocated, bill utility costs, directly to Owner.

Utility charges for service installation will be paid by Owner and are not part of this contract.

PRODUCTS

UTILITY METERS

Furnished by Utility Company.

UTILITY METER BASE

Per SMUD requirements.

EXECUTION

3.18 EXAMINATION

Verify service equipment is ready to be connected and energized.

G. CONCRETE PAD shall be installed as shown on the plans in conformance with sections 10, 18, and 24 of the Standard Specifications and with these Specials Provision.

1. Portland Cement Concrete shall be class "C", conforming to Section 10-5 of the Standard Specifications.

2. Subgrade shall have a relative compaction of 85%.

3. Finish shall have a medium broom finish.

Payment shall be made at the lump sum price bid, and shall include full compensation for furnishing all labor, materials, tools, equipment, and incidentals and for doing all work involved in Electrical System to Install as shown on the plans, as specified in these Special Provisions and as directed by the Landscape Architect.

Item No. 42 – 2" Irrigation Water Meter, Backflow Preventer and Enclosure

This item shall consist of furnishing and installing a 2" water meter, Backflow Preventer on a concrete pad with an insulated steel enclose as shown on the plans, in conformance with sections 10, 13, 14, 17, 27 and 38 of the Standard Specifications these Special Provisions.

A. Supply Line shall be PVC pipe under 2-1/2" and under shall be Schedule 40 and pipe 3" and large shall be Class 315, solvent weld and shall be installed in conformance with Section 10, 17, 24 and 38 of the Standard Specifications.

B. 2" Domestic Water Tap is existing as shown on the plans.

C. Water Meter shall be as specified in Section 27 of the Standard Specifications and to be installed by the City Water Division. Meter shall be the same size as the existing water tap. Contractor to pay water meter fee to City Utility Dept. Water Meter shall conform to Section 36-5 of the Standard Specifications. The water meter shall be installed by the City Department of Utilities. Size of tap is shown on the plans, and Meter and Backflow prevention Assembly shall be same size as tap. For tap and meter information contact the City of Sacramento, Department of Utilities, located at 300 Richards Blvd., (916) 808-5454. Contractor shall allow 60 days for installation of water tap and meter.

D. Backflow Prevention Assembly Backflow Prevention Assembly shall conform to Sections 36-9, 10-49 and Standard Drawing No. "W-606" or "W-607" of Section 38 of the Standard Specifications.

CAUTION: Backflow Assembly Manufactured by the "Ames Fire and Waterworks Company" will not be approved

Models: COLT SERIES 200A, 300A, and MAXIM SERIES 400, 500.
These assemblies cannot be maintained or repaired if the assembly body is painted. The contractor will not paint over or cover the manufacturer's identification plate and the Backflow Assembly Serial Number.

E. Concrete Pad shall be installed as shown on the plans in conformance with sections 10, 19, and 24 of the Standard Specifications and with these Specials Provision.

F. Backflow Preventer Enclosure shall be Placer Waterworks model #PW/E1A1-M insulated backflow preventer enclosure or approved equal. Color shall be green. Available through Pacer Waterworks,Inc. (916) 773-2959, FAX (916) 773-2958.

Payment shall be made at the lump sum price bid and shall include full compensation for furnishing all labor, materials, tools, equipment, and incidentals and for doing all work involved in completing the 2" Irrigation Water Meter, Backflow Preventer and Enclosure as shown on plans, as specified in these Special Provisions and as directed by the Landscape Architect.

Item No. 43 - Automatic Irrigation System

This item shall consist of furnishing and installing an Automatic Irrigation System as shown on the drawings in conformance with the applicable paragraphs of Sections 10 and 36 of the Standard Specifications and these Special Provisions.

A. Electric Control Valves shall conform to Section 36-13 of the Standard Specifications. Electric control valves shall be Hunter brass model IBV, or approved equal, and shall be constructed as specified in Section 10-50 of the Standard Specifications. Lawn and shrub area valves shall be installed at grade.

B. Gate Valves shall be constructed of all brass as specified in Section 10-51 of the Standard Specifications and shall be lead free and shall be manufactured by Nibco, Model number T-113LF or approved equal and as shown on the plans and shall be installed at the locations as shown on the plans. Plastic control valves are not acceptable. Valves shall be installed at finished grade in a concrete valve box with locking cover.

C. Master Valve shall be normally closed with 24 V solenoid and a bypass master valve normally open. Master Valve's sizes and type as shown on the plans and per Standard Drawing No. "L-20" of Section 38 of the Standard Specifications. Install per details and manufacturer's specifications. Pull four additional wires in different colors from controller to master valve.

D. Flow Sensor and Output Transmitter: Install the flow sensor as per the details and manufacturer's specifications. Pulse output transmitter shall be installed per the manufacturer's specifications.

E. Valve Boxes shall be installed in conformance with Section 10-52 of the Standard Specifications and as shown on the plans.

F. Electrical shall conform to Section 34 of the Standard Specifications.

G. Irrigation Control Wires shall conform to Sections 10-48 and 36-12 of the Standard Specifications. Trench for irrigation control wires through existing lawn shall be twenty-four inches (24") deep. Trenching for irrigation control wires through existing paved areas shall conform to Section 34-9 of the Standard Specifications.

Irrigation Control Wires shall be color coded to the use listed below and follow the colors associated with them.

a.	Full Rotor -	Red Wire
b.	Part Rotor -	Green Wire
c.	Spray Heads -	Yellow Wire
d.	Bubblers -	Blue Wire
e.	Common Wire -	White Wire

H. Quick Coupling Valves shall be by Hunter Model HQ-5RC or approved equal as specified in the plans, or approved equal. Quick coupling valve shall be constructed of brass with a locking yellow thermoplastic rubber cover with "DO NOT DRINK" markings. Quick Coupling valve shall be installed as shown on the plans in conformance with Section 10-53 of the Standard Specifications (the following shall be disregarded in the Standard Specifications "...single slot type with on inch (1") treaded pipe connection and one (1") key connection..." Valve box shall be installed with the top at finished grade. **Four (4) quick coupler keys model HK-55 shall be provided to the City of Sacramento at the completion of the project**.

I. Plastic Irrigation Pipe Fittings shall conform to Section 10-46 of the Standard Specifications with the following addition: All fittings on the upstream of the valve shall be schedule 80 PVC and all of the fittings downstream of the irrigation valve shall be schedule 40 PVC.

J. Main Line Pipe shall conform to Section 10-44 of the Standard Specifications and be amended as follows: Main line shall be schedule 40 solvent weld for lines 2" and smaller and class 315 PVC for lines 2½" and larger shall be PVC rubber ring and gasket. Main line pipes 2" and larger shall have concrete thrust blocking in conformance with Section 27-6 and Standard Drawing No. "W-103" of Section 38 of the Standard Specifications. The contractor shall pressure test the irrigation main line with the inspector present. The pressure test shall consist of the contractor pressurizing the mainline to 150 PSI for two hours with zero pressure loss with either the Inspector or Landscape Architect present.

K. Lateral Line Pipe or pipe on the discharge side of the irrigation control valve shall be Class 200 solvent weld PVC pipe and shall conform to Section 10-44 of the Standard Specifications, except as previously amended.

L. Trench Backfill shall be installed at no more than 6" lift and each lift shall be compacted to 85% relative density in landscaped areas and compacted to 95% within future paving areas. Mainline trenches shall also have 3" of sand below the mainline and 6" of sand above the conduit.

M. PVC Primers and Solvent welded - PVC pipes will require the following primer and solvent glue applications. Primer shall consist of Weld-On P-70 Industrial Grade Primer and the PVC Solvent Cement shall be Weld-On 711 Heavy Bodied Cement, or approved equal. The primer and solvent cement shall be installed per manufactures specifications.

N. Sprinklers shall be installed at the locations shown on the plans, in conformance with Standard Drawing No. L-50 of Section 38 of the Standard Specifications. Sprinklers shall be the type and model as shown on the plans.

O. Ball Valve Assembly shall be installed at the locations shown on the Plans. Ball Valve Assembly shall be constructed of all brass as specified in Section 10-51 of the Standard Specifications and shall be the type and model as shown on the plans._Plastic control valves are not acceptable. Valves shall be installed at finished grade in a concrete valve box with locking cover.

P. Electronic Marker System shall not be required.

Q. Irrigation Sleeves – Shall conform to the Standard Specifications 36-8. The minimum diameter of the sleeve shall be at least two times the diameter of the conduit going through the sleeve. The sleeve shall extend a minimum of 1' beyond the edge of the paving.

Payment shall be made at the lump sum price bid and shall include full compensation for furnishing all labor, materials, tools, equipment and incidentals and for doing all work involved in Automatic Irrigation System as shown on the plans, as specified in these Special Provisions and as directed by the Landscape Architect.

Item No. 44 - Central Irrigation Controller

This item shall consist of furnishing and installing a Central Control System as shown on the plans in conformance with Section 34 of the Standard Specifications and these Special Provisions.

A. General

1. All materials furnished and installed shall be new and shall conform to the Standard Specifications for Public Works construction, current addition, as adopted by the City.

2. Mandatory pre-installation meetings are required for all City of Sacramento parks projects. The contractor shall organize and conduct an on-site, pre-installation meeting with a representative from John Deere Green Tech (equipment supplier), Gonzalo Albor, the City's Irrigation Specialist, the Landscape Architect and the Inspector prior to the installation of the central control system.

   John Deere Green Tech representative is Jim Weller, phone number is (949) 455-7465.

3. All materials except interconnect conductors shall have a five year limited warranty. The contractor shall submit proof of warranty to the City inspector prior to the start of the maintenance period. It shall be the contractor's responsibility to obtain the

necessary warranty inspections and certification from Green Tech. No installation will be accepted without proof of warranty.

4. All existing and new computerized irrigation control system components shown on the plans shall be fully operational at final acceptance.

5. All incidental parts which are not shown on the plans or specified herein and are necessary to complete or modify the existing system shall be furnished and installed as though such parts were shown on plans or specifications. All systems shall be in satisfactory operation at the time of completion.

6. Existing interconnect systems shall be maintained in effective operation by the contractor for the duration of the work. The contractor shall notify the City inspector 48 hours prior to performing any work on an existing system.

7. Only used on repeaters

   The contractor shall coordinate with the telephone company for connections to the service and/or installation of conduits, telephone conductors, jacks, and modems at the locations shown on the drawings. Minor changes caused by actual site conditions shall be made at no cost to the City. All changes to plans shall be approved by the owner.

B. Product

1. Conduit

   a. All central control system interconnect conduit and fittings shall be PVC schedule 40 1 inch in size, unless otherwise noted.

   b. *Only used on repeaters*

      All telephone service interconnect conduit and fittings shall be as approved by the local telephone company and shall be in a 2" conduit.

2. Conductor

   a. Communication Cable as required from the submaster satellite assembly to the other satellite assemblies on line shall be a 4 conductor shielded cable (part # EV-CAB-COM). Communication cable may be used to link satellites up to 5,000 feet in length from each other. Cable shall be installed in a 1-inch PVC schedule 40 conduit.

   b. Flow Sensor Wire as required from the flow sensor into the satellite assembly enclosure shall be a 2 conductor shielded cable (part # EV-CAB-SEN). The sensor cable may be used to connect the flow sensor to a satellite up to 2,000 feet in length from each other. Cable shall be installed in a 1-inch PVC schedule 40 conduit.

c. Conductors shall be the same type and size shown on the drawings as required for proper operation of the system.

3. Wire Splices

a. Conductors shall be installed with **NO UNDERGROUND** splices unless absolutely necessary and unavoidable. Any and all underground splices that are required to be made, must be approved by the City inspector and shall be placed in a suitable type 14 inch by 19 inch valve box for easy access.

b. Wire Splices on the communication or sensor cable shall be made with a splice kit (part # ETS-SPLICE).

4. Pull Boxes shall be fabricated from a durable plastic material resistant to weather, sunlight, and chemical action of soil. Pull boxes shall be a minimum size of 20 inches in length, 15.25 inches in width and 12 inches in height. In paved areas, the pull box shall be a concrete type with a cast iron lid.

5. Ground Rod

a. A 5/8-inch by 8-foot ground rod, clamp and 8 gauge copper wire shall be provided at every satellite location. It shall be installed a minimum of 8 feet from the enclosure in a 10 inch round valve box. The valve box shall be installed flush to grade.

b. All central control system equipment shall grounded to conform to requirements of the National Electric Code, current edition as adopted by the City and the manufacturer specifications. No solder connections will be allowed. Resistance to ground shall be no more than 25 ohms.

6. Satellite Assembly

The number and location of the satellites shall be as shown on the drawings and shall be as manufactured by Rain Master. Contact John Deere Green Tech (949) 455-7465, for **Quote #1869208** for Dogwood Park.

a. All satellites shall be pre-assembled (Satellite Assembly), by John Deere Green Tech in a top entry, SA6 series "Strongbox" stainless steel weatherproof, vandal resistant, lockable enclosure manufactured by V.I.T. Products.

b. The satellite assembly (part # SA6 series) shall consist of a stainless steel slant top enclosure, stainless steel removable backboard and two sideboards, interconnect terminal strips, primary power voltage surge arrester, on/off switch, a ground fault interrupt circuit, ground rod, wire and clamp.

c. The satellite assembly, ***(part # SA6-RM4-TW)*** series shall include a radio communication circuit board for communicating with the central computer by means of a data radio. See section "e" below for radio antenna selection.

d. All outdoor controller requires a fan ***(part # FAN).*** Controller may require a radio high gain antenna ***(part # RHG)*** or a radio flat antenna ***(part # RFL)*** to be designated by the City.

e. The satellite assembly, ***(part # SA6-RM4)*** shall include a radio communication circuit board for communicating and high gain antenna assembly with a submaster satellite assembly, ***(part # SA6-RM4)*** when interconnected by means of hard wire ***(part # TW-CAB-14).***

f. The satellite assembly shall optionally include a a dual flow sensing assembly with a normally open master valve and flow sensor on the by-pass mainline and a normally closed master valve and flow sensor on the mainline for point of connection **(part # POC1-NE12200 and POC2-NE12100)**

g. The satellite assembly shall include a Rain Master PRO-MAX built-in receiver and hand-held transmitter **(part # PMR)** each assigned and individual controller access code.

h. The satellite assembly shall be covered by a five year limited warranty.

Execution of Work

1. Interconnect Conduit

a. The interconnect conduit shall be located within the public right-of-way whenever possible. If the conduit is installed outside of the public right a way, an easement shall be provided to the City prior to installation.

b. Conduit runs shall be installed as shown in the approved plans. The Inspector prior to installation shall approve any changes.

c. The ends of the conduits, whether shop or field cut shall be reamed to removed burrs and rough edges. Cuts shall be made square and true.

d. The ends of the conduit shall be capped until the pulling of wiring is started.

e. Conduit bends, except factory bends, shall have radii of not less than six times the inside diameter of the conduit.

f. Conduit shall be installed at a depth not less than 18 inches below finished grade.

g. Conduit shall be free of soil and debris.

h. Nylon or polypropylene pull ropes with a minimum tensile strength of 500 pounds shall be installed in all conduits, which are to receive future, interconnect cable. At least 2 feet of pull rope shall be extended beyond each end of the conduit run and secured.

2. Interconnect Conductors

a. All interconnect conductors shall be pulled by hand.

b. A total of 3 feet of cable shall be left at each satellite assembly and pull box. Sufficient slack shall be left to allow the wire to extend 18 inches above the top of the pull box grade.

c. The interconnect wire shall be continuous from satellite to satellite. All splices shall occur within the satellite enclosure unless specifically authorized by the City Inspector. Splices shall be capable of satisfactory operation under continuous submersion in the water.

3. Pull Boxes

a. Pull boxes shall be installed at intervals not to exceed two hundred feet and at all changes in direction and where the conduit crosses a roadway, bridge or railroad track (with a 36-inch loop inside the box).

b. Pull boxes shall be installed in area to be landscaped whenever possible.

c. The bottom of the pull box shall be bedded in crushed rock six inches deep prior to installation of the interconnect cable.

4. Equipment Supplier Support

a. Review system and plans.
b. Conduct one pre-construction meeting on site, for the contractor and owners' representative.
c. Hook-up communication and flow sensor cable inside the assembly.
d. Test to verify proper grounding.
e. Field test for proper operation of the assembly components.
f. Communication cable continuity and resistance test.
g. Calibration of assembly flow sensing components (if applicable).
h. Verify equipment conforms to and is installed in accordance with Green Tech and Manufacturers specifications and recommendations.
i. Perform functional communication test of satellite system to existing (City) computer.
j. Provide written certification letter. The contractor is required to provide the Landscape Architect with a written certification letter by Green Tech, at final acceptance.

Payment shall be made at the lump sum price bid and shall include full compensation for furnishing all labor, materials, tools, equipment and incidentals and for doing all work involved in Central Irrigation

Controller as shown on the plans, as specified in these Special Provisions and as directed by the Landscape Architect.

Item No. 45 - Booster Pump Assembly

This item shall consist of furnishing and installing a booster pump assembly as shown on the plan in conformance with these special provisions and the manufacturer's specifications.

A. Booster Pump Assembly shall be Customflow Quality Booster Package™ Model 350CPPI12222011-1/ (2)15VFD-DUPLEX; by Custom Pump & Power, Inc. Booster pump assembly has been designed for San Joaquin Trails, Reference Number 350CPPI12222011-1/ (2)15VFD-DUPLEX . Assembly, testing, startup, and service by Custom Pump & Power, Inc. Electrical supply to power the booster pump assembly shall be provided by the Contractor. 30-hp, Three- Phase: 230-Volt: 125-Amp breaker for 84-amp load.

B. A Customflow Quality Booster Packages™ is designed to operate automatically through a control system. The irrigation system must provide (A) the water pressure through the plumbing connection and the (B) control device, The pressure source for the system can be city pressure, gravity, or a pump that creates or boosts the required pressures The control device can be a controller linked with a pump start relay, or flow switch for automatic operation. The basic function of the system will receive an external electrical signal, close a contact transferring the power to the motor and the pump is activated. When the demand stops, the contacts open and subsequently the pump turns off.

C. Conditions: Maximum flow: 110-350- GPM with 67- PSI boost: Electrical service 230-volt: three-phase: 24VAC-pump start assembled and mounted above ground in a weatherproof enclosure.

All work shall comply with the City of Sacramento Standard Specifications and shall meet applicable federal, state, and local building codes, including permits as required. Design and install booster pump with electrical supply including permits and applicable fees.

Motor and pump sizing according to specifications. Pump brands used (or approved equal):

- Berkeley B Series
- Gould's 3656S
- PACO LC
- Franklin Pumps DB
- Peerless C

Pump control panel to be ETL/UL 508 listed, mounted in NEMA 12 blown and filtered enclosure with main circuit breaker door interlocked handle, Emerson SK VFD only with two drive display on the door, fused 110-volt control, 150VA control transformer, one fault light on door, three control relays, optional output terminal for external fan.

D. Enclosure

1. The standard enclosure shall be NEMA UL12 and be in compliance with UL-50, UL 508A and NEMA 250. Enclosure is rated for a maximum temperature range of 0 - 40° C. Nema 3R and Nema 4 enclosure options are available.
2. The system shall have a panel mounted disconnect to provide local, lockable means of

removing all AC input power from the integral drive. Input disconnect handle shall be mounted through-the- door and be lockable in the OFF position. The panel shall be rated for 100KIAC.

3. The system shall have a method of selecting a speed input signal (Hand — Off - Auto switch). The systems shall accept an external 0-10VDC, 4-20mA signal in Auto mode for either speed control or pressure feedback. Optionally the system can be programmed to operate in Hand from the keypad or in Auto from Communication Modules to be defined later.
4. The system shall have indicators for run and fault indicators as a minimum. These indicators shall be mounted on the panel door and clearly visible to an operator.
5. The system shall include terminal connections for safety interlocks, fault contacts, normal operational functions such as run/stop, remote references and mode control.
6. The Main Power and Motor Power shall be top entry/ bottom exit. Other options are available.
7. AC Drive Equipment - The Drive shall be an IGBT based sinusoidal PWM type AC Drive capable of operating a squirrel cage induction motor with a full load current equal to or less than the continuous output of the Drive. Regulator technology shall be software configurable to either V/Hz (single or multi motor) mode or Sensorless Dynamic Torque Vector mode (single motor). Full, closed loop flux vector control shall be available for constant torque applications. In V/Hz mode at base speed (60 hertz) and below, the Drive shall operate in constant volts per Hertz mode.
8. Drive Panel Construction - The drive panel shall be of modular construction for ease of access to control and power wiring, and maintenance. It shall consist of the following general components:
   a. Full wave rectifiers supplied by AC to provide a fixed DC voltage.
   b. DC link capacitors
   c. Fourth generation or higher Insulated Gate Bipolar Transistor (IGBT) power section shall be rated for variable torque applications. The power section shall use vector pulse width modulated (PWM) IGBT gate control algorithm and switching IGBTs to reduce motor noise. The standard output filters shall allow longer cable length from drive to motor without special filters.
   d. The Drive shall be protected by the manufactures recommended fuses.
   e. The Drive shall be microprocessor based with an LED display mounted on drive to monitor operating conditions. The Drive display section shall allow for local operation and setting of Drive function codes and display fault indication and reasons associated with the fault.
   f. Separate control and power terminal boards, with option plug shall be provided by the drive to allow for remote operation.
   g. The Drive shall have an RS485 MODBUS RTU port as a standard and options for communicating with recognized industry standard device level networks such as DeviceNet, EtherNet/ip, Interbus-S, Profibus-DP, Modbus TCP/IP LONWORKS, CAN interface, BACNET available separately.
   h. The keypad shall be common for the entire HP and drive input voltage range.

9. Logic Control - The processor shall be an Allen Bradley Micrologix 1100, a real time clock with data logging function, and have an Ethernet port for remote communication with embedded web page.

E. Operating Conditions - The Drive's operating ambient temperature range shall be -10°C to 40°C (50°C). Storage temperatures shall be between -25°C to 65°C. The relative humidity range shall be 5-95% non-condensing. The Drive shall be suitable for operation at altitudes up to 3300 feet without de-rating. The Drive shall meet IEC 61800-2 for vibration levels.

F. Standards -The Drive shall be UL and cUL listed. The Drive shall also be CE labeled and comply with standards IEC 61 800-3 for EMC compliance and IEC 61 800-2 for low voltage compliance. The Drive shall be designed in accordance with applicable portions of NEMA standards. The Drive shall be compatible with the installation requirements of interpretive codes such as National Electric Code (NEC) and Occupational Safety & Health Act (OSHA).

G. Input Power - The Drive design shall be such that it will be available for use with 200-240Volt or 380-480 VAC, 50/60 HZ 3-phase power input and be rated 100KAIC. The Drive shall be able to withstand voltage variations of -15% to +15% and imbalance no greater than 2% without tripping or affecting Drive performance. System frequency shall be 50 or 60 Hertz with a maximum frequency variation of +5%. Drive efficiency at rated load shall be 96% or higher depending on Drive's operating carrier frequency and rating. Completed Package efficiency shall not be less than 92% not including Motor and based on options included. Line notching, transients, and harmonics on the incoming line shall not affect the drive performance.

H. Output Power - The Drive shall be capable of horsepower ratings from 0.33 through 40Hp 200-240Volt or 0.5 through 200 HP 380-480Volt and output frequencies up to 1500 Hertz (variable torque) and from 0.33 through 30Hp 200-240Volt or 0.5 through 150 HP 380-480Volt and output frequencies up to 1500 Hertz (constant torque). It shall also have an energy saver feature with the capability of selecting a V/Hz automatic control function that will modify the V/Hz curve based on light load characteristics that will minimize power consumption. The Drive output voltage shall vary with frequency to maintain a constant volts/hertz ratio up to base speed (60 hertz) output. Constant or linear voltage output shall be supplied at frequencies greater than base speed (60 hertz).The Drive shall be capable of a minimum of 100% rated current in continuous operation, in accordance with the requirements of Control Techniques Catalog. The Drive overload current rating shall be 110% of rated current, for one minute (variable torque) and 150% of rated current, for one minute (constant torque).

I. Drive Features -The Drive shall have a CTVue 304 4" graphic display which can be configured to display frequency, current, function code set points, or Drive status and last 10 fault codes. It shall display 6 lines with up to 13 characters of text, providing display of Status of drive, Frequency output and text description of what is being displayed. The keypad shall be password protected to prevent unauthorized adjustment of the parameters.

1. Operating Mode - When HAND or AUTO modes are not selected the drive is inhibited.
2. HAND Mode: When HAND mode is selected the drive immediately starts and commands the motor to run at a parameter specified fixed frequency. The pressure feedback transducer, pressure switch, and flow switch inputs are not monitored and the PID loop has no effect on operation.
3. AUTO Mode: In AUTO mode the drive starts, stops, and runs the motor based on discharge pressure. The unit will start based on pressure drop and turn off based on three conditions: discharge pressure above set point, minimum speed, or drive amps.
4. Software Operating Features

a. Pressure PID: The system will monitor discharge pressure and will vary the speed to maintain constant pressure.
b. Sleep/Wake: The system will start when discharge pressure drop below the lead start PSI set point and shut off on one of three conditions: discharge PSI above set point, minimum speed, or low amperage.
c. Transducer Loss Detection: The system will monitor the 4-20 mA pressure transducer and if the signal is below 4 mA the system will give a transducer fail alarm. Once a signal above 3.8mA is detected the fault will be cleared and logged into the alarm history.
d. High Pressure Detect: If the system discharge pressure goes above the high discharge alarm set point the system will shut down the pumps and will trigger a high discharge alarm.
e. Low Pressure Detect: While either of the pumps is in the auto condition if the system discharge pressure drops below the low discharge alarm set point the system will trigger a low discharge alarm, but the pump will continue to run.
f. Automatic Fault Reset: The system has the capability of automatically resetting trip conditions. A setting in parameter 10.34 allows the user to specify the number of reset attempts from 0 to 5 times. A setting of 0 disables the function. Parameter 10.35 defines the time delay between the trip and the auto reset attempt. If the number of accumulated reset attempts reaches the value in parameter 10.34 no further reset attempts will be made. The reset attempt accumulation counter is reset to zero if no faults occur for 5 minutes, or if a manual reset is performed.
g. No Flow Detection: In Pump Mode 3 only and while running in AUTO mode the system monitors the speed of the motor and compares it to the setting in parameter 1.26 including the Band width set in parameter 1.23. If the motor speed is lower for the period of time in parameter 2.23, the system will begin the No Flow Detection sequence. First, the pressure set point will be decremented by the amount of PSI set in parameter 18.27. After a stabilizing time set in parameter 2.18 the pressure feedback will be monitored to determine if the pressure followed the lower set point. If it did, the original set point will be restored. If not, a no flow situation is present and the system will initiate sleep.
h. Multiple Set Point Selection: The system can store 2 separate pressure set points. Any of the 2 can be selected as the active set point via a binary pattern on one digital inputs. The drive shall operate as an Open _loop Control system requiring no feedback for precise speed control. The drive shall accept and follow a selectable external frequency reference of either analog 0 to +/- 10VDC or 4-20mA with signal inversion. The drive shall maintain the output frequency to within 0.2% of the reference when the reference is analog, and to within 0.1% of the reference when the reference digital (input from the Keypad, Contact closure or digital interface). The Drive shall maintain frequency set frequency regardless of load fluctuations. The Drive shall be capable of at least 4 different acceleration rates and 4 different deceleration rates. Each acceleration and deceleration rate shall be independently adjustable from 0.0 to 1920 seconds based on Frequency and 0.000 to 5760 based on RPM. The Drive shall offer three selectable acceleration/deceleration patterns: linear, S-curve, and nonlinear for variable torque loads. The drive shall have an adjustment of switching frequency between 3 to 16 kHz to limit and adjust the level of audible motor noise. The Drive shall be able to operate with its output disconnected for troubleshooting and startup. The Drive shall have a selectable

function to prevent reverse operation of the drive. The Drive shall be able to reset itself up to five (5) times (adjustable with adjustable intervals of 0- 25 seconds) after over-current, over-voltage, overheating, and overload faults.

J. Speed Control - The Drive base frequency shall be programmable 0 to 1500 hertz.

a. The Drive shall have both low frequency limit and high frequency limit functions. Each will be programmable from 0 to 1500 hertz with 1Hz resolution.
The Drive shall have a frequency bias (starting frequency) function programmable from -1500 to +1500 Hz with 1 Hz resolution.
Drive frequency gain shall be programmable from 0-100%, with 1% resolution.

b. The Drive shall be capable of at least 8 independently programmable preset frequencies, adjustable from 0 to 1500 hertz.

c. The Drive shall have the ability to prevent overload trips by automatically extending acceleration times up to 60 seconds (or 3 times normal Acceleration Rate). This will prevent tripping under heavy load condition's such as Ice, Snow, and dirt build up on fans or unusual mechanical friction in belts or gears. An Early Overload Warning Signal shall be available via programmable output.

d. The Drive shall have a built-in PLC function that can be used to accomplish advanced pump control functions as required by the application.

e. The Drive shall be capable of motor slowdown or stop by selectable regenerative dynamic braking while following one of the four selectable deceleration ramps, and control the braking torque by shedding the energy to an optional Dynamic Braking Resistor when required.

f. The Drive shall be capable of starting into a rotating load (forward or reverse) and shall smoothly accelerate or decelerate to the set point without experiencing component damage.

g. The Drive shall be capable of stopping by selectable DC injection braking. It shall be adjustable from 0 to 150% braking level and have a programmable starting frequency for DC braking (0.2-60 hertz) and programmable braking time (0.1 to 25.0 seconds).

h. The Drive shall have a start Frequency Setting that incorporates a Holding Time at the Frequency Setting, adjustable up to 6 seconds in duration.

i. The Drive shall provide at least three selectable skip frequencies with programmable band widths, adjustable 0 to 1500 Hz, which will not allow operation at or near mechanical resonance speeds.

j. The Drive shall provide selectable slip compensation, which will sense output current and adjust output frequency, to improve motor speed fluctuations. This will allow approximately 1% or less (depending in the slip value selected) speed regulation without the use of a speed feedback device. This function is to be set in RPM value. The difference between synchronous and Nameplate RPM is input into 5.08. 5.27 Enables Slip Compensation.

k. The Drive shall be constructed to support external signals, whether variable reference or discrete inputs, from distances up to 66 feet when proper cable is used.
Required Drive performance criteria includes:
Frequency Control Range: 1 to 1500 Hertz (1 - 1500 Hz CT)
Frequency Stability: Digital reference: + 0.01 % of maximum frequency Analog reference: + 0.2 % of maximum frequency
Accuracy and Resolution shall meet at least the following Standards

l. Open Loop

m. Preset Frequency reference 0.1Hz
n. Precision Frequency Reference 0.001Hz
o. Analog input 1 10 bit plus sign
p. Analog input 2 10 bit plus sign

K. Drive Control: The Drive shall accept inputs from either external dry contacts, 24 VDC or 120VAC for the following functions: Run forward command; Run reverse command; Multi-step frequency selection; Acceleration/Deceleration time selection; Stop command; Coast to stop command; Alarm reset; Trip command (external fault); Jogging operation; Frequency setting 2 and Frequency setting 1; Motor 2 and Motor 1 setting; DC brake command; Torque limiter 2 and Torque limiter 1; Switching operation between line and inverter (50 and 60 Hz); Speed Increase command; Speed Decrease command; Write enable for keypad; PID control; Interlock signal; Link enable; Universal DI; Pick up start mode; Feedback enable mode; Zero speed command; Forced stop command (Disable); Forced stop command with Deceleration time; Pre-excitation command; External Pump Fault; Pump Over temperature; Set Point 2; No Flow Switch; Pressure Switch.

The Drive shall be capable of selectable external start/stop control, either 2-wire or 3-wire type. The frequency reference shall be from, selectively, an external speed potentiometer, external analog signals (0-5 VDC, 0±10 VDC, 4 to 20mA with signal inversion), from the built in keypad, or from bus communication. The drive shall have a loss of signal detection for the 4 to 20mA reference Input. The Drive shall provide an adjustable (to a maximum of 0-200% /10.3 VDC) analog output and a frequency pulse output. The analog output shall be selectively proportional to either output frequency (before or after slip compensation), output current, output voltage, output torque, load factor, input power, PID feedback value, tachometer feedback value, DC link voltage. The frequency pulse output shall be suitable any number of things including frequency indication. The Drive shall provide selectable outputs indicating the following: Four (2) Programmable relay dry contact output for. Inverter running; Frequency equivalence signal; Frequency level detection; Torque polarity; Torque limiting; Auto-restarting; Overload early; warning; Keypad operation mode; Inverter stopping; Ready input; Motor2/ Motorl; Auxiliary terminal; Time-up signal; Cycle completion time; Alarm Indication (1, 2, 4, and 8); Fan operation signal; Auto resetting; Universal DO; Overheat early warning; Second frequency level detection; Second overload early warning; External Pump Fault; Under Pressure Alarm; Over Pressure Alarm; Transducer Loss; Dry Well Fault; Pump Over temperature Fault; One form "A" Fault relay dry contact outputs. The Drive shall be compatible with the DeviceNet, PROFIBUS-DP, MODBUS, METASYS, LONWORKS, Siemens P1 and INTERBUS-S ETHERNET/IP, ETHERNET/MODBUS,CAN Open by an plug-in option module, BACNET via a panel mounted Module and allow for network communication interfaces. The Drive keypad shall have the capability to store Function Codes that are either preset, internal, or are operational code settings used for a specific application. The keypad shall be programmable to allow custom function naming.

L. Quality Assurance All Drives shall be factory tested to ensure proper performance upon delivery. The Drive vendor shall provide a warranty for material and workmanship, for a period of 36 months after start up.

M. Start-Up Service and Training: The Drive vendor shall offer drive operational and maintenance training and/or startup service separately. The Drive vendor shall have factory trained

personnel at field locations convenient to the installation site, available for trouble shooting and/or startup assistance.

N. Documentation An instruction manual, complete with wiring diagrams, schematics, operating, and maintenance instructions, shall be provided with the Drive at the time of shipment.

O. Spare Parts Spare parts shall be available locally through local stocking distributors.

P. Quality Assurance:
1. All panels shall be 100% tested to ensure proper performance upon delivery.
2. Three Year Warranty. Manufacturer required to provide authorized approval from Emerson.
   a. IFM Efector transducer PA3224 with shielded cable.
   b. IFM Efector flow switch S1-5006 with SS adapter and cable.
   c. CUS120NO Temperature switch with red fault light and reset on panel door.
   d. No-Shok liquid filled gauges mounted on intake and discharge manifold.
   e. Nibco GD4765-3 butterfly valves with grooved connection line size for bypass and applicable line size for pump suction.
   f. Galvanized plumbing within unit are grooved connections and fittings for 2" and larger, painted dark green.
   g. Check Valve located on the suction with grooved connection
   h. Drop pipes to be ductile iron 16" below ground with flange. Contractor to extend from flange to the mainline with PVC
   i. Booster pump assembly to be mounted on a level concrete pad 4" thick with a 3" apron all around including a minimum of three conduits for power and control wires.

Q. Booster Pump Enclosure:
1. Custom enclosure with removable doors front and rear to accommodate 6" bypass and 25 hp motor 25hp VFD or larger depending on input voltage. To avoid lifting restrictions the enclosure will be fitted with 2 or 4 panel doors. Pump and electrical panel located in front for service access. Exhaust fan rated for 117 CFM, 115-volt, with finger guard for safety, external single muffin fan hood to shield from exposure. Slanted roof with louvers for proper ventilation and water runoff. Equipped with stainless steel t-handle lock with number 506 key. Steel enclosure powder coated dark green and dark green painted interior, all steel brackets and hardware for supports. Intake pipe to enter on the right and discharge to exit the left.
2. Space for future flow sensor and meter valve downstream of the booster pump installation to be coordinated with City Irrigation Supervisor is required.
3. Pumps equipped with mechanical shaft seals, back pull out designs with ample access to junction box.
4. Requires recertification for system testing with documentation twelve months following turnover.

R. Warranty - 30 months warranty following final acceptance on all equipment by City of Sacramento.

S. Close Out Materials –

1. Contractor to provide Operation & Maintenance manuals and special tools. (2 sets)
2. Contractor to provide as-built for electrical and pumping system after acceptance. (2 sets)
3. Contractor to provide equipment and assembly submittals prior to proceeding with work. (3 sets)

T. Inspection –

1. Contractor to contact City Irrigation Supervisor for inspection of in ground plumbing before backfill.
2. Manufacturer shall provide the City with a letter verifying that the booster pump was installed per the manufacture's specifications and has been tested and certified.

Payment shall be made at the lump sum price bid and shall include full compensation for furnishing all labor, materials, tools, equipment and incidentals and for doing all work involved in Booster Pump Assembly as shown on the plans, as specified in these Special Provisions and as directed by the Landscape Architect.

Item No. 46 - Trees to Plant (15 gal)

This item shall consist of furnishing, preparing and planting 15-gallon Trees in conformance with Sections 10 and 35 of the Standard Specifications and as amended by these Special Provisions.

A. Preparing of Planting Areas shall conform to Section 35-5 of the Standard Specifications.

Soil in lawn areas adjacent to paved areas shall be graded so that after settlement, the soil will be one half inch (1/2") below the top of the paving.

B. Weed Control shall conform to Section 35-6 of the Standard Specifications.

C. Trees and Planting Materials shall conform to Section 35-7 of the Standard Specifications, except where noted.

1. Trees quality and size shall comply with current edition of "American Standard for Nursery Stock" as adopted by the American Association of Nurseryman.
2. Plant Schedules shown on the plans are for the Contractor's convenience only. The Contractor shall confirm all quantities and shall plant as required by the Planting Plan when discrepancies exist.
3. Tree Stake shall be pressure-treated lodge pole pine, eight foot (8') by two inch (2") diameter.
4. Nursery Stakes shall be removed at the time of planting. No nursery stake shall be present prior to final acceptance unless other directed by the Landscape Architect.

5. Tree Ties shall conform to Section 35-7, paragraph G with the exception of the ties shall be rubber and attached per planting detail.

6. Mulch shall conform to the applicable paragraphs of Section 35-8. Mulch area shall be a four foot (4') diameter circle from the tree base in turf.

Payment shall be made at the lump sum price bid, and shall include full compensation for furnishing all labor, materials, tools, equipment and incidentals and for doing all work involved in Trees to Plant (15 gallon) as shown on the plans, as specified in these Special Provisions and as directed by the Landscape Architect.

Item No. 47 - Trees to Plant (24" box)

This item shall consist of furnishing, preparing and planting 24" Box Trees in conformance with Sections 10 and 35 of the Standard Specifications and as amended by these Special Provisions.

A. Preparing of Planting Areas shall conform to Section 35-5 of the Standard Specifications.

Soil in lawn areas adjacent to paved areas shall be graded so that after settlement, the soil will be one half inch (1/2") below the top of the paving.

B. Weed Control shall conform to Section 35-6 of the Standard Specifications.

C. Trees and Planting Materials shall conform to Section 35-7 of the Standard Specifications, except where noted.

1. Trees quality and size shall comply with current edition of "American Standard for Nursery Stock" as adopted by the American Association of Nurseryman.

2. Plant Schedules shown on the plans are for the Contractor's convenience only. The Contractor shall confirm all quantities and shall plant as required by the Planting Plan when discrepancies exist.

3. Tree Stake shall be pressure-treated lodge pole pine, eight foot (8') by two inch (2") diameter.

4. Nursery Stakes shall be removed at the time of planting. No nursery stake shall be present prior to final acceptance unless other directed by the Landscape Architect.

5. Tree Ties shall conform to Section 35-7, paragraph G with the exception of the ties shall be rubber and attached per planting detail.

6. Mulch shall conform to the applicable paragraphs of Section 35-8. Mulch area shall be a four foot (4') diameter circle from the tree base in turf.

Payment shall be made at the lump sum price bid, and shall include full compensation for furnishing all labor, materials, tools, equipment and incidentals and for doing all work involved in Trees to Plant

(24" box) as shown on the plans, as specified in these Special Provisions and as directed by the Landscape Architect.

Item No. 48 - Shrub and Groundcover Areas to Plant

This item shall consist of furnishing, preparing and planting Shrub and Groundcover Areas in conformance with Sections 10 and 35 of the Standard Specifications and as amended by these Special Provisions.

A. Preparing of Planting Areas shall conform to Section 35-5 of the Standard Specifications. Soil in Shrub and Groundcover areas adjacent to paved areas shall be graded so that after settlement, the soil will be three inches (3") below the top of the adjacent paving or curb.

B. Weed Control shall conform to Section 35-6 of the Standard Specifications.

C. Soil Preparation Materials shall conform to Section 10-39, 10-40, 10-41, 35-8 of the Standard Specifications.

1. Soil Conditioner/Fertilizer Contractor shall submit soil fertility analysis upon completion of rough grading for approval and application of amendments. Soils fertility analysis shall evaluate the following: micronutrient content, macronutrient content, pH level, saturation percentage, soil texture, infiltration rate, conductivity, total dissolved salts, cation exchange capacity, Sulfur or Lime levels, Gypsum levels, Sodium absorption ratio, exchangeable Sodium percentage, organic matter and recommendations based on analytical results. Soil conditioner shall be cultivated into the top six inches (6") of the soil and thoroughly watered in. Contractor shall provide proof of soil conditioner application to the Landscape Architect.

D. Planting Materials shall conform to Section 10-43 and 35-8 of the Standard Specifications.

Payment shall be made at the lump sum price bid and shall include full compensation for furnishing all labor, materials, tools, equipment and incidentals and for doing all work involved in Shrub and Groundcover Areas to Plant as shown on the plans, as specified in these Special Provisions and as directed by the Landscape Architect.

Item No. 49 – Landscape Weed Fabric to Place

This item shall consist of furnishing and installing landscape weed block fabric under all bark mulch in all planted areas in conformance with the Standard Specifications and as amended by these Special Provisions.

A. Landscape Weed Fabric shall be DeWitt Weed Barrier Landscape Fabric, 3.5 ounce, 12 yr, Color Brown, UV treated, spunbonded fabric or approved equal. Contact DeWitt Company 1-800-888-9669, or dewittcompany.com.

B. Metal Anchor Pins shall be by Dewitt or approved equal. Contact DeWitt Company 1-800-888-9669, or dewittcompany.com.

Payment shall be made at the lump sum price bid and shall include full compensation for furnishing all labor, materials, tools, equipment and incidentals and for doing all work involved in Landscape Weed Fabric to Place as shown on the plans, as specified in these Special Provisions and as directed by the Landscape Architect.

Item No. 50 – Bark Mulch to Install

This item shall consist of furnishing and installing a 4" layer of bark mulch in all planted areas and tree wells in conformance with Sections 10 and 35 of the Standard Specifications and as amended by these Special Provisions.

Mulch shall be evenly spread in all planter areas as specified on the plans. Mulch shall be Medium Walk on Bark, consisting of shredded Douglas fir, Red fir or white fir, fibrous in nature, four inch (4") minimum to four-inch (4") maximum in length, available from Redi-Gro, or approved equal. Contractor shall submit a mulch sample to the Landscape Architect for approval at least forty-eight (48) hours prior to installation.

Mulch shall be at a four-inch (4") finished depth at time of final acceptance by the City, and shall be free of deleterious material.

Payment shall be made at the lump sum price bid and shall include full compensation for furnishing all labor, materials, tools, equipment and incidentals and for doing all work involved in Bark Mulch to Install as shown on the plans, as specified in these Special Provisions and as directed by the Landscape Architect.

Item No. 51 – Turf Hydroseeding

This item shall consist of furnishing materials, preparing and Turf Hydroseeding areas shown on the Plans in conformance with Sections 10 and 35 of the Standard Specifications and as amended by these Special Provisions.

A. Preparing of Planting Areas, Section 35-5 of the Standard Specifications shall be amended as follows: Soil shall be cultivated until the condition of the soil is loose and fine-textured to a depth of six inches (6"). Finish grade of all planting areas shall be reviewed and approved by the Park Construction Inspector before proceeding with planting.

   Soil in lawn areas adjacent to curbs or paved areas shall be graded so that after settlement, the soil will be one-half inch (1/2") below the top of curb or paving.

   The following shall NOT be required from Section 35-5 of the Standard Specifications: "The soil shall be kept wet for a period of fourteen (14) days to permit germination of weeds. After the fourteen- (14) days, the area shall be allowed to dry to a condition that any spray equipment will not damage the existing grades. Weeds shall be sprayed with an approved

chemical, which controls both broadleaf plants and grasses, but will not contaminate the soil, such as Roundup."

B. Weed Control shall conform to Section 35-6 of the Standard Specifications.

C. Quality Control

1. Amendment Samples: Contractor shall provide a one-quart sample of each proposed amendment to Soil and Plant Laboratory of Santa Clara, (408) 727-0330, for their testing for conformance to this specification. No material shall be delivered to the site until the Park Construction Inspector approves the samples. All testing costs shall be paid for by Contractor.

D. Planting Areas: All areas to be planted, whether in seed, sod, container stock, flats, or otherwise, are defined as planting areas in these documents.

E. Soil Preparation Materials shall be determined from the soils report. The following is assumed for bidding purposes only.

1. Soil Conditioner/Fertilizer shall contain 6-20-20 (NPK ratio), and shall be applied uniformly at the rate of 20 lbs. per 1,000 square feet. Also add 4 lbs. Potassium Sulfate (30-0-50) and 70 lbs. Agricultural Gypsum per 1,000 s.f.. Soil conditioner shall be cultivated into the top six inches (6") of the soil and thoroughly watered in. Contractor shall provide proof of soil conditioner application to the Project Construction Inspector. For supplier call 1-800-927-3311 or (909) 590-1790.

2. Organic Amendment shall be nitrogen treated fir bark with the following properties:

Physical Properties: 95% - 100% passing, sieve size 6.35 mm (1/4" inch), 80% - 100% passing, sieve size 2.38 mm (No. 8, 8 mesh), and 0% - 30% passing, sieve size 500 micron (No. 35, 32 mesh).

Chemical Properties: Nitrogen Content (dry weight basis) – 0.4-0.6% iron content – minimum 0.08% dilute acid soluble Fe on dry weight basis, soluble salts – maximum 3.5 millohms / centimeter @ 25 degrees C as determined by saturation extract method; ash = 0 – 6.0%

Amendment shall be uniformly distributed throughout all irrigated planted areas and incorporated to a homogenously blended depth of six inches. Rate shall be 5 cubic yards per 1,000 square foot.

F. Finish Grading

Contractor shall finish grade all irrigated planting areas unless otherwise noted, and shall remove all rocks and colds over one cubic inch to a depth of one inch below finish grade. All areas shall be smooth and uniformly graded. All erosion damage during the construction period shall be repaired by the Contractor.

G. Turf Hydroseeding shall conform to Section 10-42, and applicable paragraphs of Section 35-7 of the Standard Specifications and these Special Provisions.

1. Seed Mix shall consist of 90% Dwarf type fescue, and 10% Kentucky Blue Grass applied at the rate of not less than twelve (12) lbs. of viable seed per 1,000 square feet. Seed mix shall be submitted to the Park Construction Inspector for approval. All seed shall be labeled in accordance with the California Food and

   Agricultural Code and shall be delivered to the site in original, unopened containers and shall bear a dated guaranteed analysis.

2. Wood Fiber Mulch shall be applied at the rate of 60 lbs. per 1,000 square feet. Wood Mulch shall be a fibrous cellulose mulch containing no growth or germination inhibiting substances, and shall be manufactured in such a manner that when thoroughly mixed with seed, fertilizer, and water, in the proportions specified, it will form a homogenous slurry, which is capable of being sprayed to form a porous mat. The fibrous mulch in its air-dry state shall contain not more than 10 percent by weight of water.

3. Fungicide shall be applied at the rate of one-third (1/3) lbs. per 1,000 square feet.

4. Binder shall be Am-Tac tackifier or approved equal applied at the rate as recommended by the manufacturer. Binder shall bind the fiber mulch to prevent erosion.

H. Turf Starter Fertilizer shall be applied at the rate of ten (10) lbs. per 1,000 square. Starter fertilizer shall conform to the requirements of the California Food and Agricultural Code.

Payment shall be made at the lump sum price bid and shall include full compensation for furnishing all labor, materials, tools, equipment and incidentals and for doing all work involved in Turf Hydroseeding as shown on the plans, as specified in these Special Provisions and as directed by the Landscape Architect.

Item No. 52 - Plant Establishment (90 days)

This item shall consist of maintaining the landscape planted areas installed in this contract as shown on the plans in conformance with Sections 35-15 through 35-18 of the Standard Specifications and as amended by these Special Provisions.

A. Start of Maintenance Period shall conform to Section 35-15 of the Standard Specifications. As amended by the following: The start of the Maintenance period will not start until SUBSTANTIAL COMPLETION (refer to sections 1-45 and 8-4 of the 2007 City Standard Specifications) of the entire project has been determined by the City landscape architect.

B. Watering shall conform to Section 35-13 of the Standard Specifications and these Special Provisions.

C. Plant Replacement shall conform to Sections 35-14 of the Standard Specifications.

D. Plant Establishment period or Landscape Maintenance Period shall conform to Section 35-16 of the Standard Specifications and be amended as follows: The Landscape Maintenance Period shall be Ninety (90) calendar days and shall begin on the date of the Start of Maintenance Period. Plant Establishment and Landscape Maintenance shall continue until final acceptance of the work.

E. Lawn Maintenance shall conform to Section 35-16 of the Standard Specifications. When the lawn reaches three inches (3") in height, the Contractor shall mow it to a height of one and one-half inches (1-1/2"). The lawn shall be mowed thereafter on a weekly basis to a height of one and one-half inches (1-1/2"). Lawn growing around trees, light poles, fences, and other obstacles shall be maintained at a height equal to that of the adjacent lawn areas, or may be chemically controlled with the approval of the Landscape Architect. Catching of lawn clippings shall not be required. Following a minimum of three (3) mowings the Contractor shall be required to treat the lawn with a selective broadleaf and grass weed herbicide that will not harm the lawn. The Contractor shall conform to Section 35-6 of the Standard Specifications for application of herbicides.

1. Lawn Fertilizer (2nd Application): One week prior to the final inspection the Contractor shall apply to all lawn areas a second application of fertilizer with a 16-6-8, N-P-K analysis, at six (6) pounds per 1,000 square feet.

F. Tree & Shrub Maintenance. Trees and Shrubs shall be pruned and shaped as directed by the Landscape Architect. Trees shall be restaked as necessary. Maintain watering basins and shrub and groundcover areas free of weeds.

G. Pre-Final Inspection shall conform to Section 35-17 of the Standard Specifications and be amended as follows: Seven (7) weeks prior to the end of Maintenance Period, the Inspector and the Landscape Architect shall conduct a pre-final inspection. At the pre-final inspection or at anytime thereafter, should the Inspector determine that the project meets the requirements of the final acceptance of the work, he may issue final acceptance of the project to the Contractor.

H. Final Inspection shall conform to Section 35-18 of the Standard Specifications. At the time of final acceptance of the work, any square yard of the planted areas shall be ninety percent (90%) weed free and in a neatly mowed condition, as determined by the Inspector.

Payment shall be made at the lump sum price bid and shall include full compensation for furnishing all labor, materials, tools, equipment and incidentals and for doing all work involved in Plant Establishment (90 days) as shown on the plans, as specified in these Special Provisions and as directed by the Landscape Architect.

II. ADDITIVE ALTERNATE BID ITEMS

Additive Alternate No. A1 – Metal Shade Structure to Install

This item shall consist of furnishing and installing a metal shade structure with cultured stone columns as shown on the plans and in conformance with these Special Provisions and the manufacturer's specifications.

A. Shade Structure shall be per Plans, or approved equal, and installed per the manufacturer's instructions. Manufacturer, model number and colors as indicated on plans.

B. Concrete Footings shall be Portland Cement Concrete Type II Class "D" as specified in Section 10 and installed in conformance with Section 20 of the Standard Specifications and the manufacturer's specifications.

C. All beams shall be structural steel tube sized according to engineering. Color shall be as indicated on plans.

D. Steel columns shall be structural steel tube sized according to engineering. Color shall be as indicated on plans.

E. All bolts shall be supplied as specified by the manufacturer and hidden at all connections.

D. Roof shall be 24 gauge pre-cut ribbed metal panels. Roof color shall be as indicated on plans.

E. Building Permit- The City's, Department of Parks and Recreation obtained a Building Permit from Development Services for the shade structure. All the engineered drawing & calculations and permit fees have been paid for on this structure by the City. The contractor will be responsible for coordinating all required building inspections with the City Building Dept. and providing a final inspection and signoff by the City Building inspector to the project manager before final acceptance.

F. Shade Structure Inspection The Contractor shall provide documentation from a representative of the manufacturer that the shade canopy has been installed per manufacturer's specifications. The Contractor is responsible for any modifications to comply with manufacture's specifications. Upon completion of the installation, manufacturer's representative shall provide documentation stating that the shade structure is installed per manufacturer's specifications. Documentation shall be provided to the project manager prior to final acceptance.

Payment shall be made at the unit price bid, and shall include full compensation for furnishing all labor, materials, tools, equipment and incidentals, and for doing all work involved in Metal Shade Structure to Install as shown on the plans, as specified in these Special Provisions and as directed by the Landscape Architect.

Additive Alternate No. A2 – Fabric Shade Canopy to Install

This item shall consist of purchasing and installing a Shade Canopy within the playground as shown on the plans in conformance with these Special Provisions and the manufacturer's specifications.

A. Shade Canopy shall be per Plans, or approved equal, and installed per the manufacturer's instructions. Manufacturer, model number and colors as indicated on plans.

B. Concrete Footings shall be installed as specified by the manufacturer and shall be Type II Class "D" Portland Cement Concrete, conforming to Paragraph 10-5 of the Standard Specifications.

C. Roof Dimensions: per plans.

D. All Beams shall be structural steel tube sized according to the manufacturer's structural engineering plans, color per plans.

E. Steel Columns shall be structural steel tube sized according to the manufacturer's structural engineering plans. Color shall be per plans

F. Fabric shall be a durable synthetic fabric designed for use in tension shade products. Fabric shall provide a minimum of 95% UV protection. Color shall be per plans.

G. All Fasteners shall be as supplied and specified by the manufacturer and hidden at all connections.

H. All structural members shall be powder coated, color per plans.

I. Column Locations shall be staked on site prior to ordering in order to verify that column locations will not interfere with the play equipment fall zones.

J. Playground Inspection The Contractor shall provide documentation from a National Playground Safety Institute (NPSI) inspector that the proposed column locations will not interfere with the fall zones. In the event that the dimensions shown on the plan result in an interference with the fall zone, the Contractor shall bring this to the attention of the Landscape Architect and Inspector. Upon completion of the installation, the NPSI inspector shall provide documentation stating that the shade canopy does not interfere with the play equipment fall zones. Documentation shall be provided to the project manager prior to final acceptance.

K. Building Permit- The City's, Department of Parks and Recreation obtained a Building Permit from Development Services for the shade structure. All the engineered drawing & calculations and permit fees have been paid for on this structure by the City. The contractor will be responsible for coordinating all required building inspections with the City Building Dept. and providing a final inspection and signoff by the City Building inspector to the project manager before final acceptance.

L. Shade Canopy Inspection The Contractor shall provide documentation from a representative of the manufacturer that the shade canopy has been installed per manufacturer's specifications. The Contractor is responsible for any modifications to comply with manufacture's specifications. Upon completion of the installation, manufacturer's representative shall provide documentation stating that the shade canopy is installed per manufacturer's specifications. Documentation shall be provided to the project manager prior to final acceptance.

Payment shall be made at the lump sum price bid and shall include full compensation for furnishing all labor, materials, tools, equipment and incidentals and for doing all work involved in completing Fabric Shade Canopy to Install as shown on the plans, as specified in these Special Provisions and as directed by the Landscape Architect.

Add Alternate Item No. A3 – Turf Sod to Place

This item shall consist of the added cost to installing Turf Sod in the areas designated on the planting plan for turf hydroseed and in other areas damaged by grading and construction operations in conformance with Sections 10 and 35 of the Standard Specifications and as amended by these Special Provisions. **If this additive alternate bid item is awarded then the contractor shall be paid for both the Turf Hydroseed and the Turf Sod to Place which will equal the total cost to place turf sod.**

A. Areas to Sod - Turf sod shall be placed only in large continuous turf area shown on the Planting Plan sheets 31 and 32 which surrounding the proposed playground, picnic area, water spray area, tennis and basketball courts and skate park. All other turf areas shown on Planting Plan sheets 29 and 30, adjacent to jogging trail, identified as 5' wide areas on plans, and others turf areas damaged by construction operations or removed concrete pads shall be hydroseeded.

B. Preparing of Planting Areas, paid under the bid item for Turf Hydroseeding to Install.

C. Weed Control paid under the bid item for Turf Hydroseeding to Install.

D. Soil Preparation Materials paid under the bid item for Turf Hydroseeding to Install.

E. Turf Sod shall consist of a mix of 90% Dwarf Fescue and 10% Kentucky Bluegrass, and shall conform to Section 10-42, and applicable paragraphs of Section 35-12 of the Standard Specifications and these Special Provisions.

F. Turf Starter Fertilizer paid under the bid item for Turf Hydroseeding to Install.

Payment shall be at the lump sum price bid, and shall include full compensation for furnishing all labor, material, tools, equipment and incidentals and for doing all work involved in completing Turf Sod to Place as shown on the plans, as specified in these Special Provisions and as directed by the Landscape Architect.

CITY OF SACRAMENTO

DEPARTMENT of PARKS and RECREATION
LANDSCAPE ARCHITECTURE SECTION
OCTOBER 27, 2013

CONSTRUCTION PLANS FOR:

DOGWOOD PARK DEVELOPMENT

P.N. L19185000

ADDRESS: 3075 MACON DRIVE

PARCEL NO.: 201-1170-008-0000

WDID:_____

TOTAL IMPROVED AREA: 3.02 ACRES

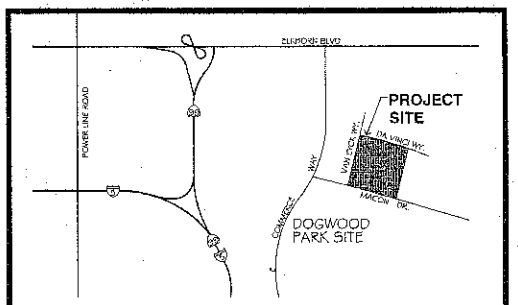

VICINITY MAP
NOT TO SCALE

SHEET INDEX

TITLE	SHEET NO.
COVER SHEET	L1
EROSION CONTROL PLAN	L2
GRADING AND DRAINAGE PLAN	L3
LAYOUT PLAN	L4
PLAYGROUND/PICNIC AREA PLAN	L5
IRRIGATION PLANS	L6, L7
PLANTING PLAN	L8
HORSESHOES/ BASKETBALL COURT PLAN	L9
CONSTRUCTION DETAILS	L10-L13
SHADE STRUCTURE/SHADE CANOPY PLANS	L14-L16
PATH OF TRAVEL PLAN	L17
ELECTRICAL PLANS	E1-E4

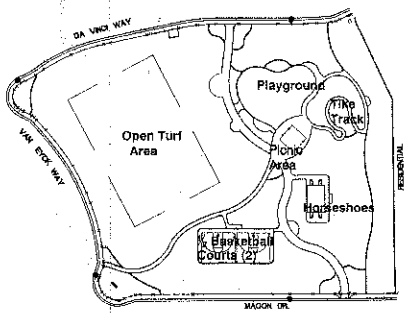

LOCATION MAP
NOT TO SCALE

GENERAL NOTES

1. COORDINATION OF CONTRACT DOCUMENTS: REFER TO SECTION 5-3 COORDINATION OF CONTRACT DOCUMENTS OF THE CITY OF SACRAMENTO STANDARD SPECIFICATIONS FOR PUBLIC CONSTRUCTION DATED JUNE 2007 INCLUDING ALL APPLICABLE ADDENDA AND MEMORANDA.
2. TRAFFIC CONTROL REQUIREMENT: REFER TO SECTION 5-10 TRAFFIC CONTROL REQUIREMENTS OF THE STANDARD SPECIFICATIONS FOR REQUIREMENTS.
3. EXISTING FACILITIES: REFER TO SECTION 13 EXISTING FACILITIES OF THE STANDARD SPECIFICATIONS FOR REQUIREMENTS.
4. LOCATION AND PROTECTION OF EXISTING UTILITIES: REFER TO SECTION 6-19.MAIN AND TRUNKLINE UTILITIES OF THE STANDARD SPECIFICATIONS FOR REQUIREMENTS.
5. PERMANENT SURVEY MONUMENTS: REFER TO SECTION 8-5 TRENCH SAFETY PLANS OF THE STANDARD SPECIFICATIONS FOR REQUIREMENTS.
6. IF HUMAN BURIALS ARE ENCOUNTERED: ALL WORK IN THE AREA SHALL STOP IMMEDIATELY AND THE SACRAMENTO COUNTY CORONER'S OFFICE SHALL BE NOTIFIED IMMEDIATELY. IF THE REMAINS ARE DETERMINED TO BE NATIVE AMERICAN IN ORIGIN, BOTH THE NATIVE AMERICAN HERITAGE COMMISSION AND ANY IDENTIFIED DESCENDANTS MUST BE NOTIFIED AND RECOMMENDATIONS FOR TREATMENT SOLICITED. PURSUANT TO: CEQA SECTION 15064.5; HEALTH AND SAFETY CODE SECTION 7050.5; PUBLIC RESOURCES CODE SECTION 5097.94 AND 5097.98.
7. TRENCH SAFETY PLANS: REFER TO SECTION 8-8 TRENCH SAFETY PLANS OF THE STANDARD SPECIFICATIONS FOR REQUIREMENTS.
8. PROTECTION OF WORK, PERSONS AND PROPERTY AGAINST DAMAGE: REFER TO SECTION 7-7 PROTECTION OF WORK, PERSONS AND PROPERTY AGAINST DAMAGE OF THE STANDARD SPECIFICATIONS FOR REQUIREMENTS.
9. RECORD DRAWINGS: REFER TO SECTION 5-8 RECORD DRAWINGS OF THE STANDARD SPECIFICATIONS FOR REQUIREMENTS.
10. LAWS, REGULATIONS: REFER TO SECTION 5-1 LAWS TO BE OBSERVED AND SECTION 5-2 CERTAIN LAWS AFFECTING THE WORK OF THE STANDARD SPECIFICATIONS AND THE SPECIAL PROVISIONS FOR REQUIREMENTS.
11. UTILITIES: THE CONTRACTOR IS RESPONSIBLE FOR DETERMINING THE LOCATION OF ALL EXISTING UTILITIES AND PROTECTING AND REPAIRING DAMAGE TO EXISTING UTILITIES. THE CONTRACTOR SHALL CONTACT UNDERGROUND SERVICE ALERT (1-800-642-2444) TWO WORKING DAYS PRIOR TO WORK COMMENCEMENT.

811 Know what's below. Call before you dig.

CITY REPRESENTATIVE:
DENNIS DAY, LANDSCAPE ARCHITECT, #4386
CITY OF SACRAMENTO, LANDSCAPE ARCHITECTURE SECTION
915 I STREET, 3RD. FLOOR, SACRAMENTO, CA 95814
ddaycityofsacramento.org , OFFICE: (916) 808-7833, FAX: (916) 808-8266

APPROVED BY:

JAMES L. COMBS, DIRECTOR — 10/28/13 (DATE)
DEPARTMENT OF PARKS AND RECREATION

C. GARY HYDEN, SUPERVISING LANDSCAPE ARCHITECT #1741 — 10/24/13 (DATE)
DEPARTMENT OF PARKS AND RECREATION

SHANNON D. BROWN, PARKS MAINTENANCE MANAGER — 10/25/13 (DATE)
DEPARTMENT OF PARKS AND RECREATION

CITY OF SACRAMENTO
DEPARTMENT OF PARKS & RECREATION
PARK, PLANNING & DEVELOPMENT SERVICES
LANDSCAPE ARCHITECTURE SECTION
915 I STREET, 3RD FLOOR, SACRAMENTO, CA 95814

DOGWOOD PARK DEVELOPMENT - CONSTRUCTION PLANS (L19185000)

DOGWOOD PARK
COVER SHEET

LANDSCAPE ARCHITECT D.DAY
DESIGN BY/DRAWN BY D.DAY/J.WIESEMANN
CAD FILE
DATE SEPT. 2013
SCALE AS SHOWN
P. N. L19185000
REVISIONS

SHEET NO. L1 OF 21

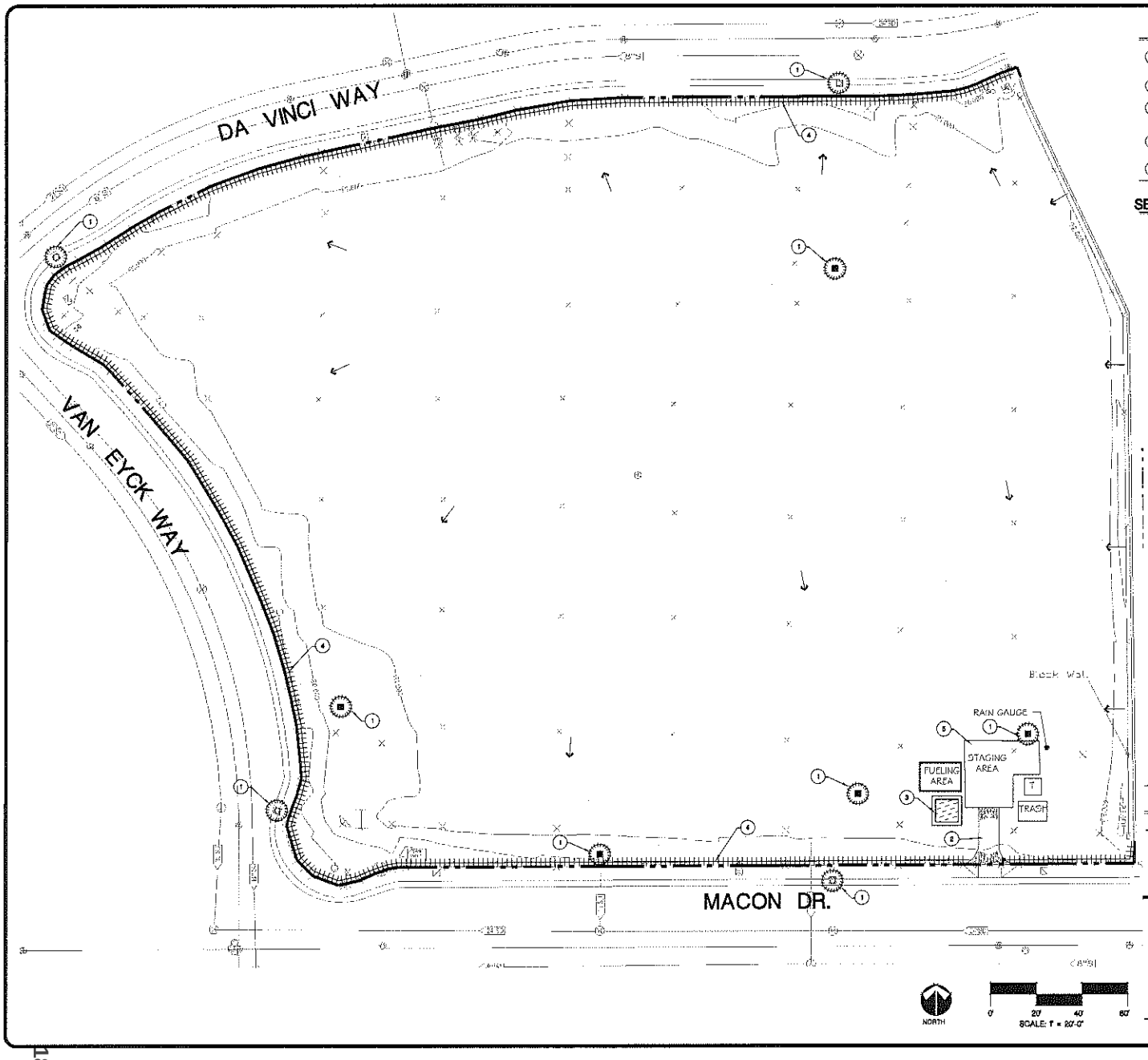

SEDIMENT & EROSION CONTROL KEY NOTES

1. FOR THE NEAREST EXISTING DRAIN INLET INSTALL A DRAIN INLET FILTER, PER CITY STANDARD, DETAIL Q-20 INLET SEDIMENT CONTROL AND Q-30 STORM DRAIN INLET FILTER BAG AT ALL TIMES DURING DEMOLITION AND CONSTRUCTION
2. STABILIZED CONSTRUCTION ENTRANCE. ROCK PLATES OVER THE EXISTING PAVEMENT. PRESERVE AND PROTECT EXISTING PAVEMENT.
3. CONCRETE WASH OUT AREA. SHALL BE PER THE CITY OF SACRAMENTO STANDARD SPECIFICATIONS DETAIL Q-80 DATED MAY 2007 OR THE CONTRACTOR CAN USE A MOBILE CONCRETE WASHOUT SYSTEM.
4. FILTER ROLLS. SHALL BE PER THE CITY OF SACRAMENTO STANDARD SPECIFICATIONS DETAIL Q-40 FILTER ROLLS.
5. CONSTRUCTION STAGING AREA

SEDIMENT & EROSION CONTROL STANDARDS NOTES

1. THE CONTRACTOR SHALL FOLLOW THE GUIDELINES FOR THE CITY OF SACRAMENTO'S "ADMINISTRATIVE AND TECHNICAL PROCEDURES MANUAL FOR GRADING AND EROSION AND SEDIMENT CONTROL" FOR THE MEASURES SHOWN OR STATED ON THESE PLANS.
2. PRIOR TO COMMENCEMENT OF WORK, THE CONTRACTOR SHALL PLACE INLET FILTER BAGS AROUND ALL EXISTING DRAINAGE STRUCTURE OPENINGS WHICH COLLECT FLOW FROM THE PROPOSED PROJECT. THE CONTRACTOR SHALL PLACE THESE INLET FILTER BAGS AROUND ALL NEW DRAINAGE STRUCTURE OPENINGS IMMEDIATELY AFTER THE STRUCTURE OPENING IS CONSTRUCTED. THESE INLET FILTER BAGS SHALL BE MAINTAINED AND REMAIN IN PLACE UNTIL CONSTRUCTION IS COMPLETED.
3. WHEN THE FINAL GRADING IS COMPLETED, THE CONTRACTOR SHALL STABILIZE ALL SLOPES 3:1 OR STEEPER WITH SEEDING, MULCHING, BROADCAST STRAW, OR JUTE NETTING AS DESCRIBED IN THE GUIDELINES MENTIONED IN NOTE 1.
4. THE CONTRACTOR SHALL PLACE STABILIZED CONSTRUCTION ENTRANCE AS SHOWN ON THE PLANS PRIOR TO COMMENCEMENT OF GRADING & SHALL REMAIN IN PLACE UNTIL THE TRAS BARE ROCK COURSE IS COMPLETED. LOCATION MAY BE ADJUSTED BY THE CONTRACTOR TO FACILITATE GRADING OPERATIONS. ALL CONSTRUCTION TRAFFIC ENTERING THE PAVED ROAD MUST CROSS THE STABILIZED CONSTRUCTION ENTRANCE.
5. CONTRACTOR SHALL STORE ALL CONSTRUCTION MATERIALS AT ONE DESIGNATED LOCATION. THIS LOCATION SHALL BE BERMED AND FENCED. STORE MATERIAL ON PALLETS AND PROVIDE COVERING FOR SOLUBLE MATERIALS. RELOCATE STORAGE AREA INTO BUILDING SHELL WHEN POSSIBLE. INSPECT AREA WEEKLY.
6. CONTRACTOR SHALL PROVIDE AN AREA FOR CONCRETE WASTE. THIS AREA SHALL BE BERMED AND USED FOR CONCRETE TRUCKS TO DROP THEIR LEFTOVER WASTE. AT NO TIME SHALL A CONCRETE TRUCK DUMP ITS WASTE AND CLEAN ITS TRUCK INTO THE CITY STORM DRAINS VIA CURB AND GUTTER. INSPECT DAILY TO CONTROL RUNOFF AND WEEKLY FOR REMOVAL OF HARDENED CONCRETE.
7. THE CONTRACTOR SHALL KEEP ONSITE & OFFSITE PAVED STREETS CLEAN AT ALL TIMES. ANY MATERIAL DEPOSITED ON PAVED STREETS BY THE CONTRACTOR'S OPERATION SHALL BE REMOVED & CLEANED BY SWEEPING AT THE END OF EACH DAY OR AS NECESSARY.
8. CONTRACTOR MUST ENSURE THAT THE CONSTRUCTION SITE IS PREPARED PRIOR TO THE ONSET OF ANY STORM. CONTRACTOR SHALL HAVE ALL EROSION AND SEDIMENT CONTROL MEASURES IN PLACE FOR THE WINTER MONTHS PRIOR TO OCTOBER 1.
9. ALL EROSION AND SEDIMENT CONTROL MEASURES SHALL BE MAINTAINED UNTIL DISTURBED AREAS ARE STABILIZED. CHANGES TO THIS EROSION AND SEDIMENT CONTROL PLAN SHALL BE MADE TO MEET FIELD CONDITIONS ONLY WITH THE APPROVAL OF OR AT THE DIRECTION OF A REPRESENTATIVE OF THE DEPARTMENT OF UTILITIES.
10. THIS PLAN MAY NOT COVER ALL THE SITUATIONS THAT ARISE DURING CONSTRUCTION DUE TO ANTICIPATED FIELD CONDITIONS. VARIATIONS MAY BE MADE TO THE PLAN IN THE FIELD SUBJECT TO THE APPROVAL OF OR AT THE DIRECTION OF A REPRESENTATIVE OF THE DEPARTMENT OF UTILITIES.
11. CONTRACTOR SHALL MAINTAIN A LOG AT THE SITE OF ALL INSPECTIONS FOR MAINTENANCE OF BMPS, AS WELL AS, ANY CORRECTIVE CHANGES TO THE BMPS OR EROSION AND SEDIMENT CONTROL PLAN.
12. IN AREAS WHERE SOIL IS EXPOSED, PROMPT REPLANTING WITH NATIVE COMPATIBLE DROUGHT RESISTANT VEGETATION SHALL BE PERFORMED. NO AREAS WILL BE LEFT EXPOSED OVER THE WINTER SEASON.
13. ALL EROSION AND SEDIMENT CONTROL MEASURES SHALL BE CHECKED BEFORE AND AFTER ALL STORMS TO ENSURE MEASURES ARE FUNCTIONING PROPERLY.
14. WINTERIZATION PLANNING FOR THE WINTER MONTHS (OCTOBER 1 THROUGH APRIL 30), PLANS MUST BE PREPARED SUBMITTED, AND APPROVED BY SEPTEMBER 15 OF EACH YEAR FOR CLOSURE OF THE PROJECT FOR AN EXTENDED PERIOD OF TIME DUE TO ADVERSE NATURE (RAIN, SNOW, ETC.). PLAN SHALL INCLUDE SCHEDULE OF INSPECTION AND MAINTENANCE OF THE VARIOUS BMPS REQUIRED BY THE PLAN. KEY PERSONNEL PHONE NUMBERS SHALL BE INCLUDED FOR EMERGENCIES.
15. PRIOR TO GRADING, THE CONTRACTOR SHALL PLACE FILTER BARRIERS PER CITY OF SACRAMENTO'S ADMINISTRATIVE AND TECHNICAL PROCEDURE MANUAL FOR "GRADING AND EROSION AND SEDIMENT CONTROL" WHERE CUT AND FILLS EXCEED 0.5 FEET IN HEIGHT ALONG THE PERIMETER OF THE SITE TO TREAT THE RUNOFF TO ADJACENT PROPERTIES. THESE EROSION CONTROL ELEMENTS SHALL BE MAINTAINED AND REMAIN IN PLACE UNTIL CONSTRUCTION IS COMPLETE.

LEGEND

- FILTER ROLL
- STORM DRAIN INLET FILTER BAG
- INLET FILTER FIBER ROLLS WITH GRAVEL BED
- TEMPORARY FENCE LOCATION

EXISTING CONDITIONS

- ELECTR. CABINET
- PULL BOX
- MH
- WATER METER
- WATER VALVE
- OIL GD. CB
- SIGN
- FIRE HYDRANT
- CENTERLINE
- BACKFLOW PREV.
- STREET LIGHT
- CONTROL MONUMENT
- CABLE TV/TELEPHONE
- SPOT ELEVATION
- CONTOUR ELEVATION

T — PORTABLE RESTROOM - TIE DOWN STRUCTURE

TRASH — TRASH ENCLOSURES SHALL HAVE A LID AND THEY SHALL BE COVER AT THE END OF EVERY DAY, BEFORE RAIN EVENTS AND DURING WINDY DAYS.

FUELING AREA — ON-SITE FUELING SHALL BE DONE IN ONE DESIGNATED AREA. THE AREA SHALL HAVE A CONTAINMENT BERMS TO CAPTURE FUEL SPILLS. NO BARE SOIL SHALL BE EXPOSED IN THIS AREA. A BARRIER SHALL BE INSTALLED ON TOP OF THE SOIL. ALSO A FUEL SPILL KIT SHALL BE WITHIN OR NEXT TO THE FUELING AREA AND THE SPILL KIT SHALL BE CLEARLY LABELED

811 Know what's below. Call before you dig.

CITY OF SACRAMENTO
DEPARTMENT OF PARKS & RECREATION
PARK, PLANNING & DEVELOPMENT SERVICES
LANDSCAPE ARCHITECTURE SECTION
915 I STREET, 3RD FLOOR, SACRAMENTO, CA 95814

DOGWOOD PARK DEVELOPMENT - CONSTRUCTION PLANS (L19185000)

DOGWOOD PARK
EROSION CONTROL PLAN

LANDSCAPE ARCHITECT
D. DAY
DESIGN BY/DRAWN BY
D. DAY / J. WIESEMANN
CAD FILE
DATE OCT. 27, 2010
SCALE AS SHOWN
P. N. L19185000
REVISIONS

SHEET NO.
L2 OF 21

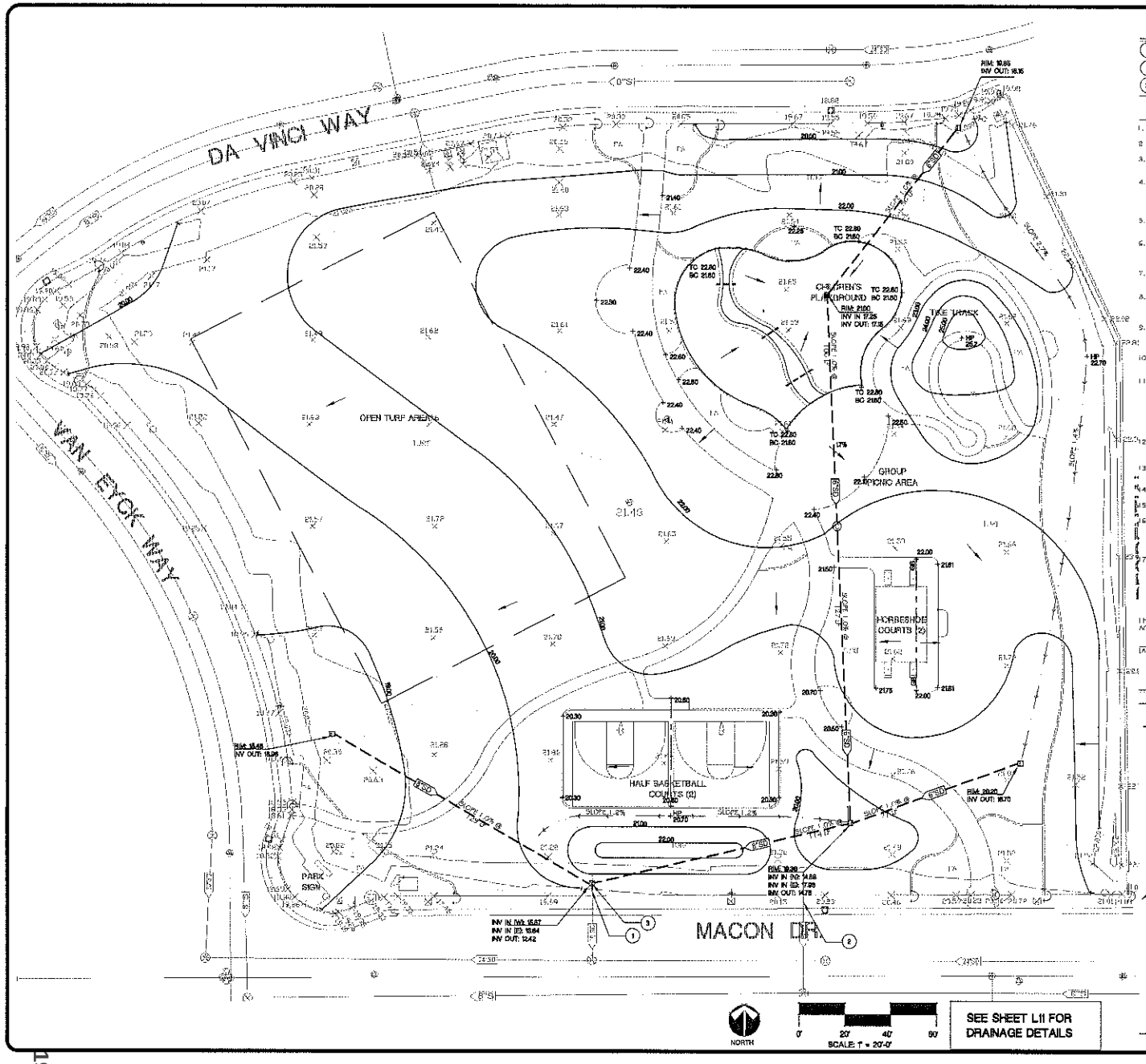

SEE SHEET L11 FOR DRAINAGE DETAILS

GRADING & DRAINAGE KEY NOTES

1. EXISTING 39 LF. 15" STORM DRAIN STUB. INV @ STUB 13.38. INV @ MANHOLE ON MACON DR. 12.28.
2. EXISTING 52 LF. 4" SEWER STUB. INV @ STUB 9.25. INV @ MANHOLE ON MACON DR. 9.08.
3. NEW 48" MANHOLE PER CITY STANDARD DETAIL S 70. 15" INV OUT@12.42

GRADING & DRAINAGE STANDARDS NOTES

1. SEE GENERAL NOTES ON COVER SHEET L-1.
2. SEE SPECIAL PROVISIONS FOR ADDITIONAL INFORMATION AND REQUIREMENTS.
3. WALKWAY CROSS SLOPES SHALL BE 1% MIN., 2% MAX. AND SHALL NOT EXCEED 4.9% SLOPE LONGITUDINALLY EXCEPT AT SPECIFIED RAMP LOCATIONS.
4. ALL EXISTING IMPROVEMENTS AND FACILITIES OF NEIGHBORING PROPERTIES SHALL BE PROTECTED AND SHALL NOT BE DISTURBED EXCEPT AS REQUIRED BY THE CONSTRUCTION OF THESE IMPROVEMENTS. IF DAMAGE TO THESE EXISTING FACILITIES OCCURS DUE TO THE CONSTRUCTION OF PROPOSED IMPROVEMENTS, THE NECESSARY REPAIRS WILL BE AT THE EXPENSE OF THE CONTRACTOR.
5. ALL GRADING SHALL BE DONE IN ACCORDANCE WITH THE CITY OF SACRAMENTO REQUIREMENTS AND STANDARD SPECIFICATIONS LATEST EDITION.
6. PUBLIC SAFETY AND TRAFFIC CONTROL SHALL BE PROVIDED IN ACCORDANCE WITH THE STANDARD CONSTRUCTION SPECIFICATIONS AND AS DIRECTED BY THE PARK CONSTRUCTION INSPECTOR. SAFE VEHICULAR AND PEDESTRIAN ACCESS SHALL BE PROVIDED AT ALL TIMES DURING CONSTRUCTION.
7. THE CONTRACTOR SHALL NOTIFY THE CITY OF SACRAMENTO PARK CONSTRUCTION INSPECTOR IMMEDIATELY UPON COMPLETION OF STAKING.
8. THE CONTRACTOR SHALL NOTIFY THE CITY OF SACRAMENTO PARK CONSTRUCTION INSPECTOR TWO WORKING DAYS PRIOR TO THE INTENTION TO COMMENCE WORK. THE CONTRACTOR SHALL NOT START ANY GRADING UNTIL THE CITY COMPLETES PRE-GRADING INSPECTION.
9. THE CONTRACTOR SHALL BE RESPONSIBLE FOR THE PROTECTION OF ALL SURVEY MONUMENTS AND OTHER SURVEY MARKERS DURING CONSTRUCTION. ALL SUCH MONUMENTS OR MARKERS DESTROYED DURING CONSTRUCTION SHALL BE REPLACED AT THE CONTRACTORS EXPENSE.
10. GRADES SHALL BE ESTABLISHED TO MAINTAIN CONSTANT SLOPES BETWEEN SPOT ELEVATIONS AND CONTOURS INDICATED ON THE PLANS AND CONFORM TO EXISTING GRADES.
11. THE CONTRACTOR SHALL ADHERE TO THE CITY OF SACRAMENTO'S DUST CONTROL MEASURES PER THE GRADING ORDINANCE. NORMAL WETTING PROCEDURES SHALL NOT OCCUR ON EXCESSIVELY WINDY DAYS. DAILY CLEAN-UP OF DUST CARRIED OUTO STREET SURFACES BY CONSTRUCTION SHALL BE REQUIRED. UPON COMPLETION OF SITE PREPARATION ACTIVITIES, THE CONTRACTOR SHALL TAKE MEASURES TO REDUCE EROSION. PAVING AND PLANTING SHALL BE COMPLETED AS SOON AS POSSIBLE. THE CONTRACTOR SHALL DESIGNATE A PERSON TO MONITOR THE DUST CONTROL PROGRAM AND OVERSEE IMPLEMENTATION OF THE DUST CONTROL STRATEGIES.
12. ALL CONTOURS AND GRADES IN IMPROVED AREAS SHALL BE FINISHED SMOOTH WITH NO ABRUPT ELEVATION CHANGES.
13. FINISH GRADE AT TURF AREAS SHALL BE 1" BELOW THE TOP OF ADJACENT CONCRETE FLATWORK OR MOWSTRIPS.
14. GRADES SHALL BE ADJUSTED AS REQUIRED FOR A BALANCED SITE.
15. ALL DRAIN PIPES SHALL BE PVC SDR 35 STORM DRAIN PIPE OR AS NOTED ON THE PLANS.
16. THE GRADING WORK UNDER THIS CONTRACT CONSISTS OF EARTHWORK AND COMPACTION REQUIRED TO ESTABLISH ROUGH GRADES TO CONFORM TO THE CONTOURS, GRADES, LINES AND SHAPES AS INDICATED ON THE PLANS. FINAL ADJUSTMENT MAY BE NECESSARY IN THE FIELD BY RAISING OR LOWERING PROPOSED GRADES.
17. THE CONTRACTOR SHALL MEET THE LINES AND GRADES AS SHOWN ON THE GRADING PLANS. SHOULD IMPORT OR EXPORT OF SOIL BECOME NECESSARY TO MEET THE LINES AND GRADES AS SHOWN ON THE PLANS, IT SHALL BE AT THE SOLE EXPENSE OF THE CONTRACTOR. SHOULD EXPORT OF SOIL BECOME NECESSARY, IT SHALL BE AT THE DISCRETION OF THE LANDSCAPE ARCHITECT TO ALLOW THE CONTRACTOR TO MAKE NECESSARY ADJUSTMENTS TO BALANCE THE EARTHWORK ON SITE AT NO ADDITIONAL COST TO THE CITY. THE CONTRACTOR SHALL BE RESPONSIBLE FOR ALL EARTHWORK CALCULATIONS AND INCLUDING ANY IMPORT OR EXPORT COSTS THAT MAY BE REQUIRED IF HIS OR HER BID.

I HAVE COMPLIED WITH THE CRITERIA OF THE SACRAMENTO CITY CODE CHAPTER 15-92 AND APPLIED THEM ACCORDINGLY FOR THE EFFICIENT USE OF WATER IN THE GRADING PLAN

LANDSCAPE ARCHITECT'S SIGNATURE DATE

GRADING & DRAINAGE LEGEND

SYMBOLS	PROPOSED ITEMS	SYMBOLS	EXISTING ITEMS
8"SD	STORM DRAIN PIPE & PIPE SIZE		ELECT. CABINET
	CONTRACTOR SHALL INSTALL QTY. (2) - 4" DRAINAGE SLEEVES IN PLAY AREA. SLOPE TO DRAIN		PULL BOX
	PROPOSED CONTOURS		MH
	PROPOSED CONTOUR TIE IN TO EXISTING CONTOUR		WATER METER
	CLEANOUT. SEE DETAIL 3/ L11 AND SPECS		WATER VALVE
	MANHOLE INSTALL PER CITY OF SACRAMENTO STANDARD DETAIL S 70		DI, GD, CB
	PLAY AREA CATCH BASIN. SEE DETAIL 2/ L11 AND SPECS.		SIGN
	CATCH BASIN (CB) SEE DETAIL 1/ L11 AND SPECS.		FIRE HYDRANT
RIM: INV IN: INV OUT:	CATCH BASIN DESIGNATION RIM ELEVATION INVERT IN ELEVATION INVERT OUT ELEVATION		CENTERLINE
	SWALE		BACKFLOW PREV.
	DRAINAGE DIRECTION		STREET LIGHT
	RIDGE		CONTROL MONUMENT
	ALIGN WITH EXISTING		CABLE TV/BROADBAND
+HP	HIGH POINT	10.65 ×	SPOT ELEVATION
FS	FINISH SURFACE	2.00	CONTOUR ELEVATION
FG	FINISH GRADE		
CB	CATCH BASIN		
TC	TOP OF CURB		
BC	BOTTOM OF CURB		
GB	GRADE BREAK		

811 Know what's below. Call before you dig.

CITY OF SACRAMENTO
DEPARTMENT OF PARKS & RECREATION
PARK, PLANNING & DEVELOPMENT SERVICES
LANDSCAPE ARCHITECTURE SECTION
915 I STREET, 3RD FLOOR, SACRAMENTO, CA 95814

DOGWOOD PARK DEVELOPMENT - CONSTRUCTION PLANS (L19165000)

DOGWOOD PARK
GRADING & DRAINAGE PLAN

LANDSCAPE ARCHITECT: D. DAY
DESIGN BY/DRAWN BY: D. DAY / J. WIDEMAN
CAD FILE:
DATE: OCT. 27, 20
SCALE: AS SHOWN
P. N. L19165000
REVISIONS

SHEET NO. L3 OF 21

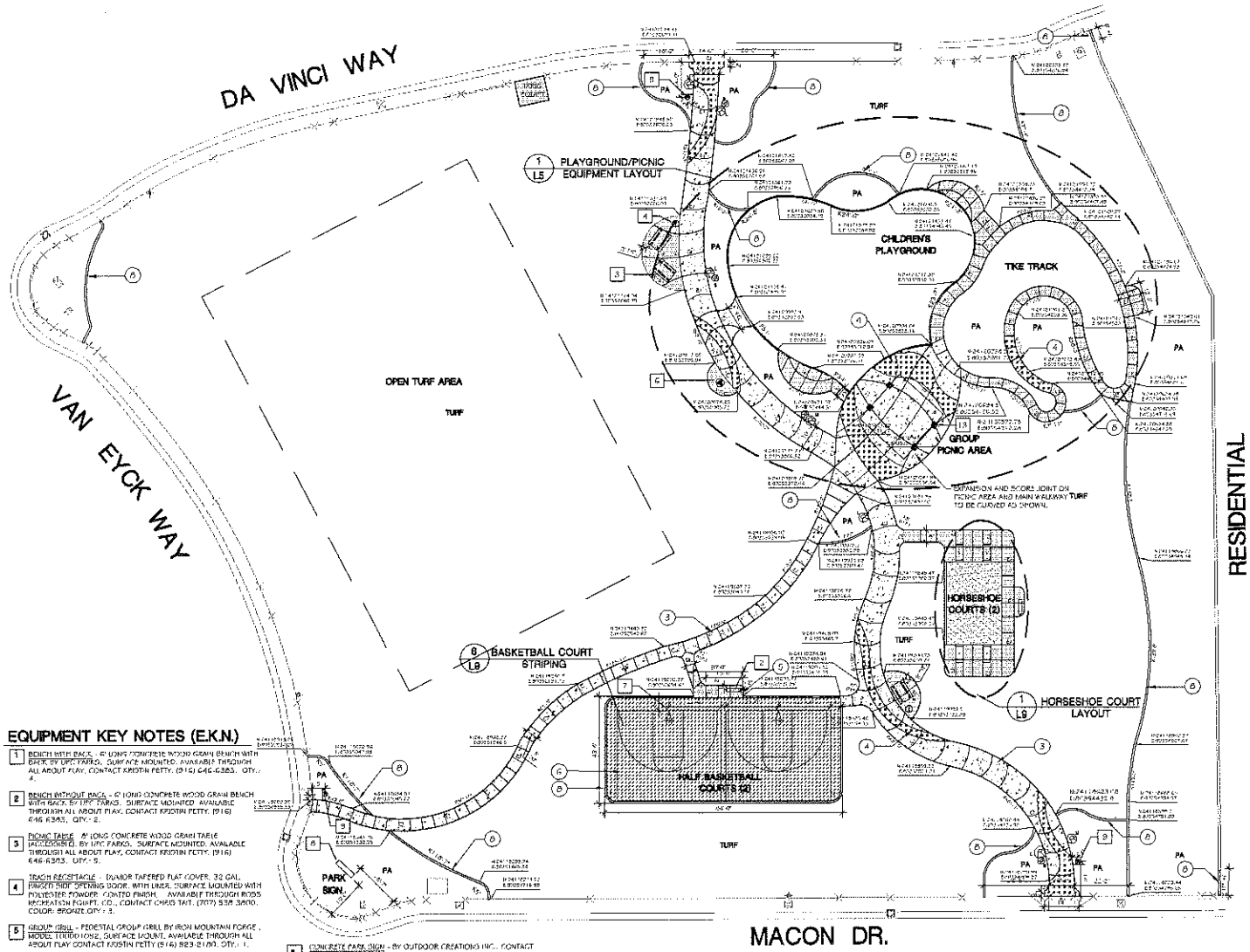

LAYOUT LEGEND

SYM	DESCRIPTION
	SCORE LINE, SEE KEY NOTE #1
	EXPANSION JOINT, SEE KEY NOTE #2.
	5" CONCRETE FLATWORK OVER 12" AGGREGATE BASE, SEE KEY NOTE #3.
	5" EXPOSED AGGREGATE WITH GLASS BEAN PAVING, OVER 12" AGGREGATE BASE, SEE KEY NOTE #4.
	3" ASPHALT PAVEMENT OVER 12" AGGREGATE BASE, SEE KEY NOTE #6.
	4" CONCRETE FLATWORK OVER 6" AGGREGATE BASE, SEE KEY NOTE #5.
	9" CONCRETE MOWSTRIP, SEE KEY NOTE #8.
	6" PLAY AREA CURB, SEE KEY NOTE #9.
	LANDSCAPE BOULDERS, SEE EQUIPMENT KEY NOTE #10.
	PARK RULE SIGN, SEE EQUIPMENT KEY NOTE #5.
1 / L9	DETAIL NUMBER / SHEET NUMBER
PA	PLANTING AREA
DG	STABILIZED DECOMPOSED GRANITE PAVING (@ HORSESHOE COURT)
	ALIGNMENT OF EXISTING TO PROPOSED ELEMENT
EQ	EQUAL
℄	CENTER LINE
N-6221.95 / E-4197.08	LAYOUT COORDINATE CALLOUT (NORTH AND EASTINGS)

LAYOUT NOTES

1. PER EK TO CITY OF SACRAMENTO FIELD BOOK 1458, PAGES 11 - 13, 8/10/2007 FOR CREEK DOGWOOD PARK TOPOGRAPHIC SURVEY.
2. HORIZONTAL CONTROL: DATUM IS BASED ON THE CALIFORNIA COORDINATE SYSTEM OF 1983, ZONE II UTILIZING COORDINATES FROM RECORD OF SURVEY 68 PAGE 29, CALIBRATING POINTS. BASIS OF BEARINGS IS THE CENTERLINE OF MACON DR. PER 186 F.M. 16 (RECORD BEARING FROM PT. #2 TO PT. #3 IS N89°44'01"E, 734.65' (GRID) N89°45'41"E, 734.65 (NAD 83).
3. VERTICAL CONTROL: BENCH MARK 236-J4A, ELEV. = 18.316', RIVET NAIL IN LIGHT BASE NE CORNER OF MADRY DR. AND HOYT DR. SET NEW BENCH MARK 236-J4B AT NW CORNER OF MACON DR. AND VAN EYCK WY., BANKSIDE WY. IN STREET LIGHT BASE ELEV. = 19.742'.
4. WRITTEN DIMENSIONS SHALL TAKE PRECEDENT OVER SCALED DIMENSIONS. ALL FIELD ADJUSTMENTS MUST BE APPROVED BY THE INSPECTOR PRIOR TO INSTALLATION. ALL DIMENSIONS ARE TO INSIDE EDGE OF CONCRETE FLATWORK/MOWSTRIP, FACE OF CURB, OR CENTER POINT OF RADIUS. CONTRACTOR SHALL PROVIDE SMOOTH TRANSITIONS BETWEEN POINT DITATIONS ALONG WALKWAY.
5. VERIFY EXISTING CONDITIONS BEFORE BEGINNING WORK. NOTIFY INSPECTOR IF THERE ARE SUBSTANTIAL DISCREPANCIES.
6. NEW CONCRETE FLATWORK SHALL MEET GRADE OF EXISTING CONCRETE FLATWORK OR ASPHALT PAVING. WHERE NEW CONCRETE IS PLACED ADJACENT TO CURBS OR EXISTING CONCRETE PAVING, A CONTINUOUS EXPANSION JOINT SHALL BE INSTALLED BETWEEN THE NEW CONCRETE FLATWORK AND CURBS, EXISTING CONCRETE FLATWORK, OR EXISTING ASPHALT PAVING. ANY NEW CONCRETE WALKWAY SHALL HAVE FORMS REVIEWED BY LANDSCAPE ARCHITECT PRIOR TO POURING CONCRETE.
7. SUBBASE SHALL BE INSTALLED PRIOR TO PLACING CONCRETE WORK.
8. ALL MATERIALS & FINISHES SHALL BE AS PER DRAWINGS. REFER TO SPECIFICATIONS & DETAILS FOR ADDITIONAL INFORMATION. SOME MATERIALS MAY REQUIRE SEVERAL WEEKS OR MONTHS ORDER LEAD TIME. CONTRACTOR IS RESPONSIBLE FOR DETERMINING ANY & ALL ORDERING LEAD TIMES & PROVIDING REQUIRED MATERIALS AT THE PROJECT SITE IN A TIMELY MANNER. NO UNAPPROVED SUBSTITUTIONS WILL BE ALLOWED. CONTACT THE LANDSCAPE ARCHITECT IMMEDIATELY IF A SPECIFIED MATERIAL IS NOT AVAILABLE.
9. EXPANSION JOINTS TO BE MEASURED AT 20' +/- O.C. IN WALKWAYS. OTHER AREAS EXPANSION JOINTS TO BE PLACED AS SHOWN ON PLANS.
10. SCORE JOINTS TO BE SPACED AS SHOWN ON PLANS.

KEY NOTES (K.N.)

1. SCORE JOINT TO INSTALL PER DETAIL 4&1/0, TYPICAL
2. EXPANSION JOINT TO INSTALL PER DETAIL 4&1/0 TYPICAL.
3. 5" CONCRETE OVER 12" AGGREGATE BASE PER DETAIL 1&1/0.
4. 5" EXPOSED AGGREGATE WITH GLASS BEAN PAVING OVER 12" AGGREGATE BASE PER DETAIL 1&1/0.
5. 4" CONCRETE FLATWORK OVER 6" AGGREGATE BASE PER DETAIL 2&1/0.
6. 3" ASPHALTIC CONCRETE PAVEMENT OVER 12" AGGREGATE BASE PER DETAIL 3&1/0.
7. POURED-IN-PLACE RUBBER SURFACING OVER 6" AGGREGATE BASE TO PLACE PER DETAIL 2&5 AND 3&5.
8. 9" CONCRETE MOWSTRIP TO CONSTRUCT PER DETAIL 6&1/0.
9. 6" PLAY AREA CURB TO CONSTRUCT PER DETAIL 5&1/0.
10. 4" STABALIZED DECOMPOSED GRANITE PAVING OVER WEED BLOCK FABRIC PER DETAIL 3&9.

EQUIPMENT KEY NOTES (E.K.N.)

1. BENCH WITH BACK - 6' LONG CONCRETE WOOD GRAIN BENCH WITH BACK, BY UPC PARKS. SURFACE MOUNTED. AVAILABLE THROUGH ALL ABOUT PLAY, CONTACT KRISTIN PETTY, (916) 646-6383. QTY.: 4.
2. BENCH WITHOUT BACK - 6' LONG CONCRETE WOOD GRAIN BENCH WITH BACK, BY UPC PARKS. SURFACE MOUNTED. AVAILABLE THROUGH ALL ABOUT PLAY, CONTACT KRISTIN PETTY, (916) 646-6383. QTY.: 2.
3. PICNIC TABLE - 8' LONG CONCRETE WOOD GRAIN TABLE (ACCESSIBLE), BY UPC PARKS. SURFACE MOUNTED. AVAILABLE THROUGH ALL ABOUT PLAY, CONTACT KRISTIN PETTY, (916) 646-6383. QTY.: 5.
4. TRASH RECEPTACLE - DUMOR TAPERED FLAT COVER, 32 GAL. (INNER) SIDE OPENING DOOR, WITH LINER. SURFACE MOUNTED WITH POLYESTER POWDER COATED FINISH. AVAILABLE THROUGH BOSS RECREATION EQUIPT. CO., CONTACT CHRIS TAIT, (707) 538-3800. COLOR: BRONZE. QTY.: 3.
5. GROUP GRILL - PEDESTAL GROUP GRILL BY IRON MOUNTAIN FORGE, MODEL: THERMOSIZ. SURFACE MOUNT. AVAILABLE THROUGH ALL ABOUT PLAY CONTACT KRISTIN PETTY (916) 923-2190. QTY.: 1.
6. DRINKING FOUNTAIN - ACCESSIBLE HI-LOW PEDESTAL DRINKING FOUNTAIN W/ BOTTLE FILLER, BY MOST DEPENDABLE FOUNTAIN MODEL 440-5M. SURFACE MOUNTED. CONTACT MOST DEPENDABLE FOUNTAIN AT (800) 552-6331. COLOR: GREEN. QTY.: 1. INSTALL PER DETAIL 1&1/0.
7. BASKETBALL COURT GOALS - BY TRUE BOUNCE, MODEL #PASS4, 5" x 5" x 3/16" DURAMIX STEEL POSTS WITH 4' EXTENSIONS. COLOR: BLACK. BACKBOARD: 42" x 72" x 5/8" MODEL XL7042. COLOR: CLEAR. BACKBOARD PAD: MODEL #BT072. COLOR: GREEN. GOALS: HEAVY DUTY BREAKAWAY. MODEL #B1000. RIM: RIVOM, MODEL SN 141. AVAILABLE THROUGH CALIFORNIA SPORTS AND RECREATION INC., 1 (800) 235-2440. QTY.: 2 EACH.
8. CONCRETE PARK SIGN - BY OUTDOOR CREATIONS INC., CONTACT BRAD SMITH (925) 837-6774. QTY.: 1. INSTALL SIGN ON A.B. FOOTING. PER SEE SPECIFICATIONS AND DETAIL 4 AND 5&1/0.
9. PARK RULE SIGNS - TO BE PROVIDE BY THE CITY. CONTRACTOR TO INSTALL RULE SIGNS FACING THE STREET ON AN EXISTING LIGHT POSTS PER DETAIL DETAIL 4&1/0, QTY. 3.
10. LANDSCAPE BOULDERS - TYPE: SIERRA BOULDER OR APPROVED EQUAL. AVAILABLE AT CASCADE ROCK, 4565 FLETCHER BL, SACRAMENTO, CA 95820 | (800) 899 ROCK. INSTALL PER DETAIL 5&1/0.
   - L - LARGE BOULDERS: 3' x 3', QTY.: 4.
   - M - MEDIUM BOULDERS: 2' x 3', QTY.: 3.
   - S - SMALL BOULDERS: 2' x 2', QTY.: 4.
11. PLAYGROUND EQUIPMENT/TIKE TRACK EQUIPMENT - SEE SHEET L5.
12. FABRIC SHADE CANOPY - SEE SHEET L16.
13. METAL SHADE STRUCTURE - SEE SHEET L14 AND L15.

NORTH

0' 20' 40' 60'
SCALE: 1" = 20'-0"

SEE SHEET L10-L13 FOR CONSTRUCTION DETAILS

811 Know what's below. Call before you dig.

CITY OF SACRAMENTO
DEPARTMENT OF PARKS & RECREATION
PARK, PLANNING & DEVELOPMENT SERVICES
LANDSCAPE ARCHITECTURE SECTION
915 I STREET, 3RD FLOOR, SACRAMENTO, CA 95814

DOGWOOD PARK DEVELOPMENT - CONSTRUCTION PLANS (L19185000)

DOGWOOD PARK
LAYOUT PLAN

LANDSCAPE ARCHITECT
D. DAY
DESIGN BY/DRAWN BY
D. DAY / I. WIESEMANN
CAD FILE
DATE OCT. 27, 2011
SCALE AS SHOWN
F. N. L19185000
REVISIONS

SHEET NO.
L4 OF 21

Packet Page 2018 of 2531

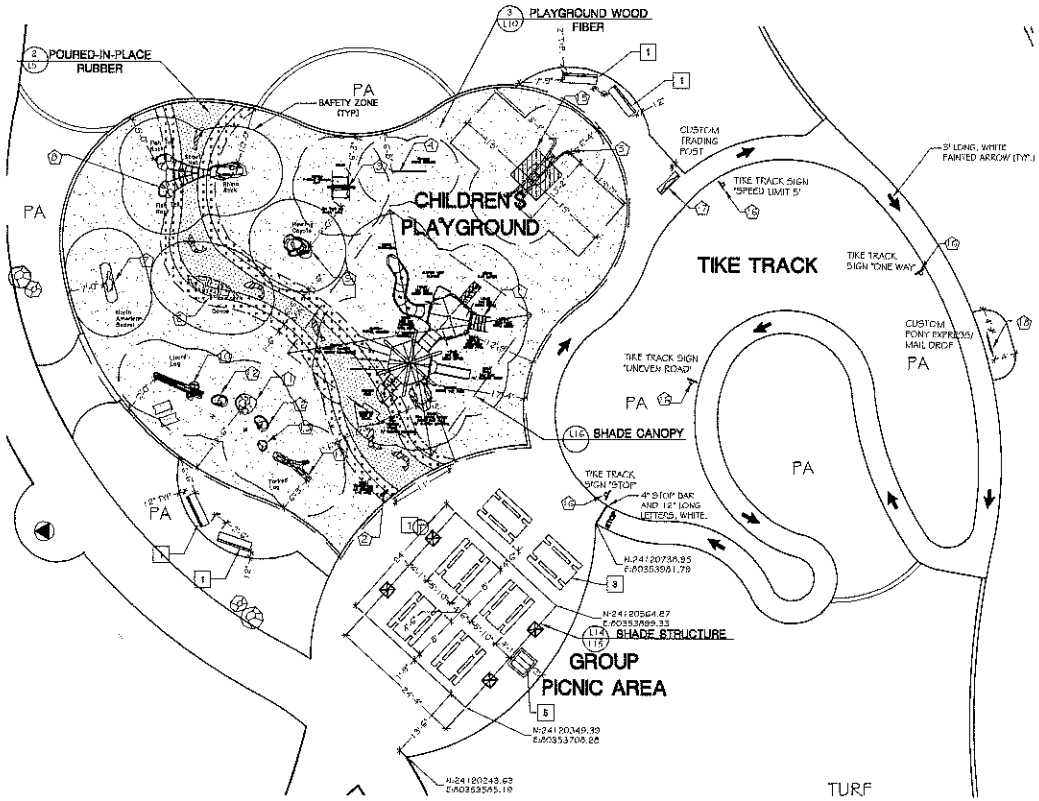

1 / L5 PLAYGROUND/PICNIC EQUIPMENT LAYOUT

SCALE: 1" = 10' - 0"

NOTES:
1. REFER TO SHT. L3-GRADING AND DRAINAGE PLAN FOR DRAIN LINES AND CATCH BASIN WITHIN PLAYGROUND.
2. REFER TO SHT. L4-LAYOUT PLAN FOR EQUIPMENT KEY NOTES AND KEY NOTES.

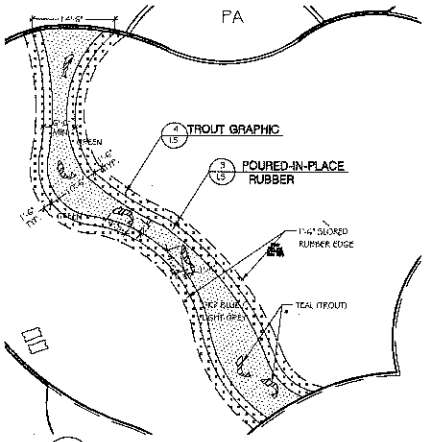

POURED-IN-PLACE RUBBER COLORS:

- GREEN
- 75% SKY BLUE 25% LIGHT GREY
- TEAL

NOTES:
1. POURED-IN-PLACE RUBBER SURFACING THICKNESS SHALL BE 1/2" COLOR WEAR COURSE LAYER, OVER 2" OF SHREDDED CUSHION LAYER. PER DETAIL 3/L5.
2. RUBBER SURFACING TO BE PLACED OVER 6" OF AGGREGATE BASE PER DETAIL 3/L5.

2 / L5 POURED-IN-PLACE RUBBER PLAN

SCALE: 1" = 10' - 0"

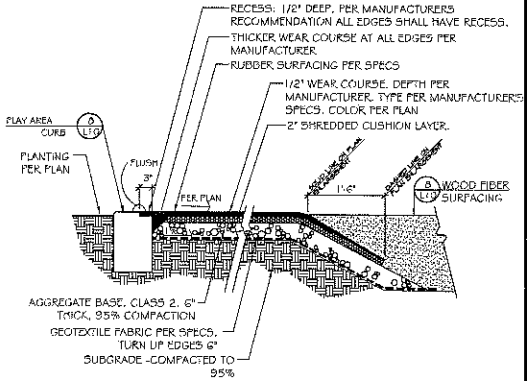

3 / L5 POURED-IN-PLACE RUBBER DETAIL

SCALE: 1" = 10' - 0"

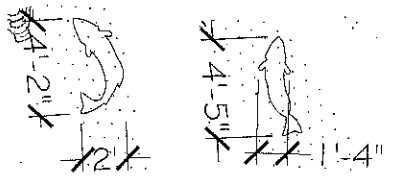

4 / L5 TROUT GRAPHIC ENLARGEMENT

SCALE: 1" = 10' - 0"

NOTE:
1. CITY SHALL PROVIDE A SCALE-SIZED PAPER TEMPLATE OF TROUT GRAPHICS FOR THE CONTRACTORS USE.

PLAY EQUIPMENT LIST

QTY.	DESCRIPTION
	PLAY STRUCTURE COMPONENTS (BY LANDSCAPE STRUCTURES INC.):
1	SINGLE POLY SLIDE, 40" DECK, DIRECT BURY (DS).
1	SLIDEWINDERS, 72" DECK, DB, 2 RIGHT, 1 LEFT
1	CURVE CLIMBER, 72" DECK, DB.
1	DECK LINK, W/ BARRIERS & STEPS
1	TIPE PEAK ROCK CLIMBER, DB ONLY
1	WOOD PLANK WIGGLE LADDER, 72" DECK W/ RECYCLED WOOD-GRAIN HANDHOLDS, DB.
1	RECYCLED WOOD GRAIN LUMBER PANEL
3	TIKE TREE ACCENT TOPPER
1	CURVED TRANSFER MODULE RIGHT 40" DECK, DB.
2	HEXAGON TENDERDECK
2	1.66" ALUMINUM POST, DB.
1	1.90" ALUMINUM POST, DB.
3	1.90" POST FOR ROOF, DB.
1	TIP LEAF CLIMBER FOR 72 DECK W/ TERMALENE HANDHOLDS
1	TIP TEEPEE CLIMBER PLAY 40" OR 48" DECK.
1	TEEPEE HEX STRUCTURE, DOES NOT INCLUDES HEX DECK CUSTOM ROOF INFILLS.
1	TEEPEE ROCKETY CLIMBER TO 40" 48" DECK.
3	UPGRADE TO MODIFY COMPONENTS TO FIT TEEPEE STRUCTURE.
1	WELCOME SIGN (ISI PROVIDED) AGES 5-12, DB.
	INDEPENDENT ITEMS (BY LANDSCAPE STRUCTURES INC.):
1	A FRAME ACTIVITY AREA W/ BONGO AND DIA "FIND THE ANIMAL GAME". FIND GAME INCLUDES 10 SMALL FIGURES TO BE MOUNTED TO THE STRUCTURE (COMPONENTS).
1	DREAM CATCHER, DB.
1	DOODLE SWING

PLAY EQUIPMENT LIST

QTY.	DESCRIPTION
	INDEPENDENT ITEMS (BY LPC PARKS):
1	NATIVE CANOE. INSTALL ON 10' X 3' X 4" THICK REINFORCED CONCRETE FOOTING. PER DETAIL 8/L10, OR MANUFACTURER'S DETAIL.
1	AMERICAN BEAVER ON LOG. WITH ATTACHED FOOTING.
1	RHINO ROCK W/ SCOUT NET AND FISHTAIL ROCKS. PLACE RHINO ROCK ON 8' X 8' X 4" THICK REINFORCED CONCRETE FOOTING W/ #5 REBAR @ 16" O.C. EACH WAY. REFER TO TOP OF FOOTING 15" BELOW FINISH GRADE OF OF SURFACING. PER DETAIL 8/L10 OR MANUFACTURER'S DETAIL.
1	HOWLING COYOTE, WITH ATTACHED FOOTING.
1	LIZARD LOG, WITH ATTACHED FOOTING. COLOR: LIMESTONE.
1	HOP ROCKS LARGE, WITH ATTACHED FOOTING.COLOR: LIMESTONE.
1	HOP ROCKS MEDIUM, WITH ATTACHED FOOTING.COLOR: LIMESTONE.
1	HOP ROCKS SMALL, WITH ATTACHED FOOTING. COLOR: LIMESTONE.
1	FORKED LOG, WITH ATTACHED FOOTING. COLOR: LIMESTONE.
1	76" X 76" RUBBER MAT TO INSTALL UNDER DOODLE SWING. BY ZEAGER PLAYGROUND SURFACING. CONTACT ALL ABOUT PLAY, (916) 207-1555. (SEE DETAIL 10/L10.)
	TIKE TRACK ITEMS (BY LANDSCAPE STRUCTURES INC.):
4	DGI TRIEWAY SIGNS, INCLUDES 1-P3 POST, DB. "STOP", "YIELD", "UNEVEN ROAD" AND "SPEED LIMIT 5".
1	CUSTOM TRADING POST INCLUDES 2-P3 POST, DB.
1	CUSTOM "PONY EXPRESS" / MAIL DROP INCLUDES 2-P3 POST, DB.

PLAY EQUIPMENT COLORS

PLAY EQUIPMENT AND SWINGS: MFRD BY LANDSCAPE STRUCTURES, AVAILABLE THROUGH ROSS RECREATION EQUIPMENT CO., CONTACT CHRIS TAIT AT (707) 538-3900, OR CHRIS@ROSSREC.COM

CONCRETE SCULPTURES (CANOE, LOGS, ROCKS, AND COYOTE) MFRD. BY LPC PARKS , AVAILABLE THROUGH ALL ABOUT PLAY. CONTACT KRISTIN METTY AT (916) 207-1555. OR KRISTIN@PLAYGROUNDPROS.COM

POSTS	BROWN
CLAMPS	TAN
DECKS	BROWN
METAL COMPONENTS	ACORN
POLYETHYLENE ELEMENTS	LEAF
PERMALENE COLOR PANELS	TAN
LEAF CLIMBER PERMALENE PANELS	GREEN
TENDERTUFF COATING	TAN
CABLE	RED
SWING POSTS	LEAF
TRADING POST COUNTER	BRICK
"TRADING POST" PERMALENE PANEL	TAN
"PONY EXPRESS" PERMALENE PANEL	TAN
"MAIL DROP" PERMALENE PANEL	BLUE
"STOP" SIGN	RED
"YIELD" AND UNEVEN ROAD SIGN	YELLOW
"SPEED LIMIT 5" SIGN	TAN
SIGN POSTS	ACORN

PLAY EQUIPMENT NOTES

1. CONTRACTOR SHALL HAVE PLAYGROUND EQUIPMENT ASSEMBLED AND INSTALLED BY A CERTIFIED PLAY EQUIPMENT INSTALLER, PER SPECIFICATIONS FOR PLAY EQUIPMENT INSTALLATION CERTIFICATION REQUIREMENTS.
2. PLAY STRUCTURE COLORS SHALL BE SUBMITTED TO CITY FOR APPROVAL.
3. ALL DIMENSIONS ARE TO EDGE OF CONCRETE FLATWORK, FACE OF CURB OF, CENTERLINE OF POST.
4. ALL DECK HEIGHTS ARE MEASURED FROM TOP OF RESILIENT SURFACE FINISHED GRADE, AND ARE IDENTIFIED BY THE TEXT SHOWING THE DECK HEIGHT, I.E. 48 REPRESENTS A 48 INCH DECK HEIGHT.
5. THE PARTS LISTED IN THE PLAY EQUIPMENT LIST ARE ONLY A PARTIAL LIST OF PARTS NECESSARY TO CONSTRUCT THE PLAY EQUIPMENT. THE MANUFACTURER SHALL SUPPLY ALL PARTS, FITTINGS, COMPONENTS & HARDWARE AS REQUIRED TO COMPLETE & CONSTRUCT THE PLAY STRUCTURES & COMPLY W. SAFETY, LIABILITY, & WARRANTY REQUIREMENTS.
6. PLAY EQUIPMENT SHALL BE INSPECTED BY A CERTIFIED PLAYGROUND INSPECTOR, AND THE REPORT SUBMITTED TO THE LANDSCAPE ARCHITECT. PLAY EQUIPMENT SHALL BE INSPECTED BY THE CITY PLAYGROUND INSPECTOR, DAVID ROBBINS @ 868-8445. CALL 48 HOURS PRIOR TO FOOTING LAYOUT AND AT FINAL CONSTRUCTION.
7. PLAYGROUND WOOD FIBER SHALL BE IN PLACE WITHIN 48 HOURS AFTER COMPLETION OF PLAYGROUND EQUIPMENT INSTALLATION. WOOD FIBER TO BE 12" MINIMUM DEPTH AT EDGE OF PLAYGROUND AT TIME OF FINAL ACCEPTANCE, AND DEEPER OVER THE PLAY AREA CATCH BASIN AND CENTER. TOP OF WOOD FIBER TO BE LEVEL AND COMPACTED.
8. CONTRACTOR SHALL SUBMIT WOOD FIBER SAMPLE, PRODUCT SPECIFICATIONS AND TESTING, AND PROOF OF LIABILITY INSURANCE TO CITY FOR APPROVAL BEFORE INSTALLATION.

811 Know what's below. Call before you dig.

CITY OF SACRAMENTO
DEPARTMENT OF PARKS & RECREATION
PARK, PLANNING & DEVELOPMENT SERVICES
LANDSCAPE ARCHITECTURE SECTION
915 I STREET, 3RD FLOOR, SACRAMENTO, CA 95814

DOGWOOD PARK DEVELOPMENT - CONSTRUCTION PLANS (L19185000)

DOGWOOD PARK
PLAYGROUND/ PICNIC AREA
ENLARGEMENT PLAN

LANDSCAPE ARCHITECT: D. DAY
DESIGN BY/DRAWN BY: D. DAY / J. WIEDEMANN
CAD FILE:
DATE: OCT. 27, 2013
SCALE: AS SHOWN
P. N. L19185000
REVISIONS:

SHEET NO. L5 OF 21

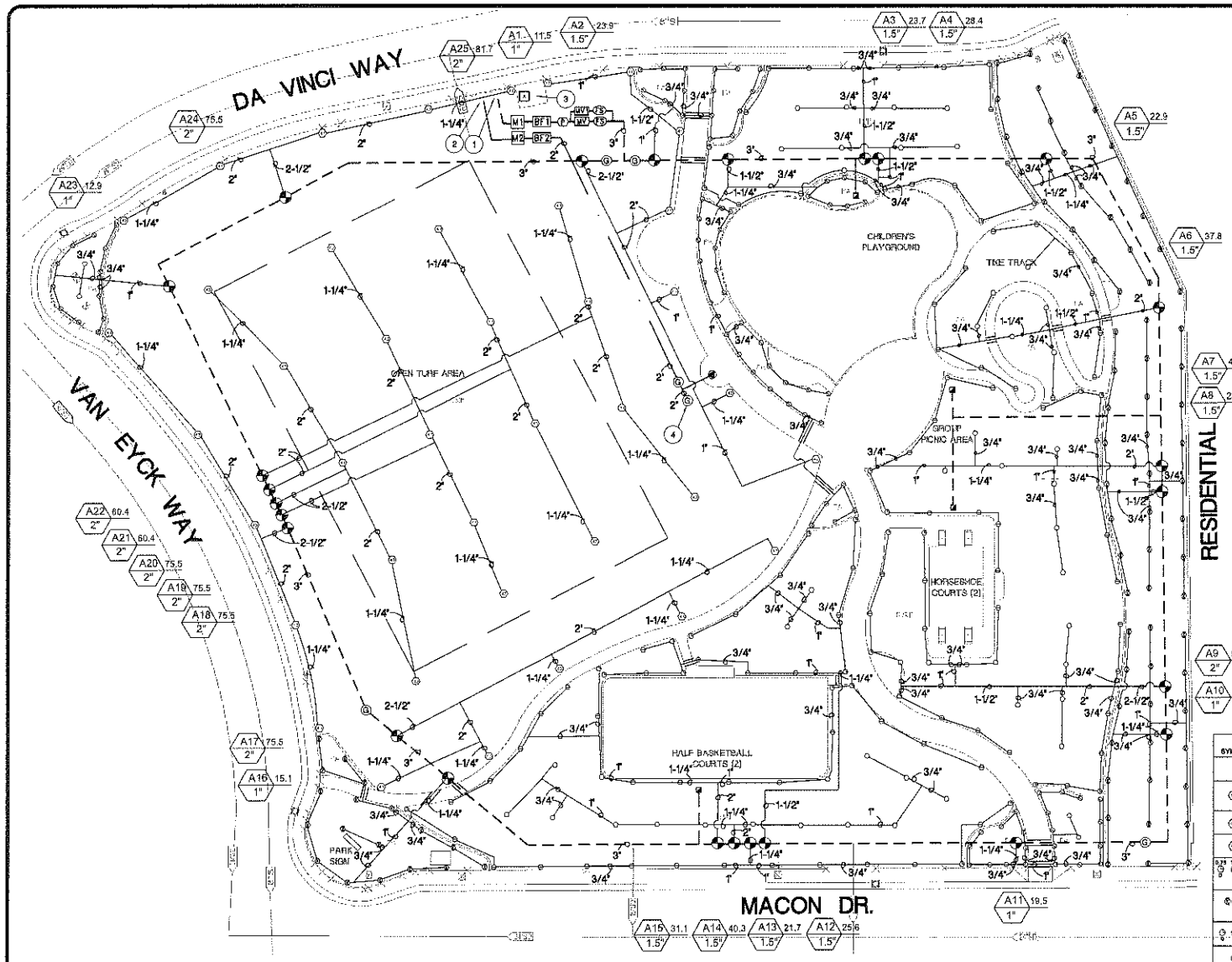

IRRIGATION KEY NOTES

1. EXISTING 2" REF/WATER WATER SERVICE STUB. CITY TO REMOVE AND INSTALL 2" IRRIGATION WATER SERVICE METER WITH METER PER CITY SPEC OR PER A REDUCED PRESSURE PER CITY STANDARD DRAWING. CONTRACTOR TO PROVIDE AND INSTALL APPROVED RP DEVICE PER CITY STANDARD DRAWING. (WS-2)

   EXISTING 2" DOMESTIC WATER SERVICE STUB. CITY TO REMOVE AND INSTALL DOMESTIC WATER SERVICE METER WITH METER PER CITY SPEC OR PER A REDUCED PRESSURE PER CITY STANDARD DRAWING. CONTRACTOR TO PROVIDE AND INSTALL APPROVED RP DEVICE PER CITY STANDARD DRAWING. (WS-2)
2. NEW IRRIGATION EQUIPMENT SHALL BE MOUNTED ON CONCRETE PAD PER DETAIL 9/L7.
3. STUB 1" DOMESTIC WATER FOR FUTURE WATER METER AREA

IRRIGATION LEGEND

SYMBOL	MANUFACTURER / MODEL / DESCRIPTION
	HUNTER HV, BRASS AUTOMATIC ELECTRIC REMOTE CONTROL VALVE. SIZE PER PLAN.
	HUNTER, 1" QUICK COUPLER VALVE, TWO PIECE BODY, LOCKING COVER.
	NIBCO T-113LF, CLASS 125 FLANGED IRON BODY GATE VALVE. SAME SIZE AS PIPE DIAMETER.
MV FS	3" MASTER VALVE / FLOW SENSOR ASSEMBLY - DOC1-AC12200 FS5. AVAILABLE THROUGH JOHN DEERE LANDSCAPE
MV FS	1.5" MASTER VALVE / FLOW SENSOR ASSEMBLY - DOC2-NF12100 AVAILABLE THROUGH JOHN DEERE LANDSCAPE
BF1	2" NEW IRRIGATION REDUCED PRESSURE BACKFLOW DEVICE W/ LOCKABLE CAGE. SEE SPEC.
BF2	2" NEW DOMESTIC REDUCED PRESSURE BACKFLOW DEVICE W/ LOCKABLE CAGE. SEE SPEC.
M1	NEW 2" IRRIGATION METER
M2	NEW 2" DOMESTIC WATER METER.
A	36 STATION 2 WIRE SYSTEM RAINMASTER SW-TW SAT ASSEMBLY. TAKTW SAT RAM TW PED (650 PAR CAC KIT) AVAILABLE THROUGH JOHN DEERE LANDSCAPES. GREEN TECH DIVISION. CONTACT JIM WELLER (800) 427-0779. CONTACT JOHN DEERE LANDSCAPES PRIOR TO INSTALLATION TO SCHEDULE A PRE-CONSTRUCTION MEETING.
P	CUSTOM FLOW BOOSTER PUMP PACKAGE. MODEL 100 CFT1 (951)303-1950 VFD. CONTACT DAVE TARALO AT CUSTOM PUMP AND POWER, 711 916 429 9729.
	IRRIGATION MAINLINE: MAINLINE SHALL BE SCHEDULE 40 UP TO 3-1/2" DIA. AND CLASS 315 OVER 3-1/2".
	IRRIGATION LATERAL LINE: PVC CLASS 200 PIPE SIZES ARE LABELED AT TRANSITIONS
	SCH 40 PVC SLEEVE AT 2 X MIN. LINE SIZE. UNDER ALL PAVING. TYP. BORE SLEEVE UNDER EXISTING CONCRETE, WHERE POSSIBLE.
	POTABLE WATER LINE
	Valve Callout: Valve Number, Valve GPM, Valve Size
	KEY CALL OUT

IRRIGATION LEGEND

SYMBOL	MANUFACTURER / MODEL / DESCRIPTION	PSI	GPM	DESIGN RADIUS
	F = FULL (ALL ROTORS WO LABELS ARE ADJUSTABLE) (6" POP-UP FOR ALL TURF AREAS 12" POP-UP FOR ALL PLANTER AREAS)			
	HUNTER, I-40-XX-SS-H3-41, ROTOR, ADJUSTABLE, WITH CHECK VALVE, STAINLESS STEEL RISER.	60	15.1	41'
	HUNTER, I-40-XX-SS-45, ROTOR, ADJUSTABLE AND FULL CIRCLE, WITH CHECK VALVE, STAINLESS STEEL RISER	60	22.7	53'
	HUNTER, I-40-XX-SS-43, ROTOR, ADJUSTABLE AND FULL CIRCLE, WITH CHECK VALVE, STAINLESS STEEL RISER	60	15.1	43'
0.75 1.5 2.0 SR SR SR	HUNTER, I-20-36WADV-0.75 SR, 1.5 SR, 2.0 SR, ROTOR, ADJUSTABLE AND FULL CIRCLE, WITH CHECK VALVE, STAINLESS STEEL RISER	60	0.83 1.6 3.1	21' 21' 21'
	HUNTER, MP3000-90-CV, ROTARY SPRAY WITH CHECK VALVE. K=BLACK ADJ ARC 90-210. G=GREEN ADJ ARC 210-270. R=RED 360 ARC. ON HUNTER.	40	0.74 1.10 1.47	16' 16' 16'
	HUNTER, RISE-XX-CV-10, SPRAY HEAD WITH CHECK VALVE	30	1.59 0.95 0.45	10'
	HUNTER, PDN3-18-50-CV, ROOT ZONE WATERING SYSTEM WITH CHECK VALVE. (2 PER TREE)	30	0.50	---

SEE SHEETS L7, AND L11-L13 FOR IRRIGATION DETAILS

811 Know what's below. Call before you dig.

CITY OF SACRAMENTO
DEPARTMENT OF PARKS & RECREATION
PARK, PLANNING & DEVELOPMENT SERVICES
LANDSCAPE ARCHITECTURE SECTION
915 I STREET, 3RD FLOOR, SACRAMENTO, CA 95814

DOGWOOD PARK DEVELOPMENT - CONSTRUCTION PLANS (L19185000)

DOGWOOD PARK
IRRIGATION PLAN

LANDSCAPE ARCHITECT: D. DAY
DESIGN BY/DRAWN BY: D. DAY/D. WEISENHAUS
CAD FILE:
DATE: OCT. 27, 20
SCALE: AS SHOWN
P. N. L19185000
REVISIONS:

SHEET NO. L6 OF 21

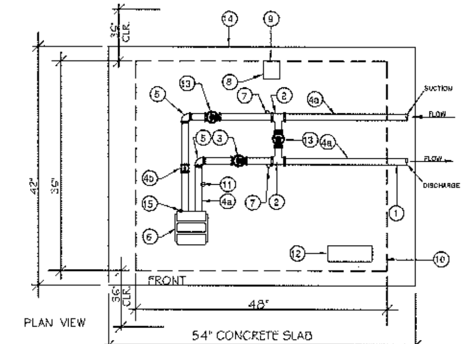

CUSTOMFLOW REFERENCE: 100 CPP3 08202013-1/80 VFD

1. 3" COMPANION FLANGE
2. 3" GALVANIZED TEE (GROOVED)
3. 3" NIBCO GD4765-3 BUTTERFLY VALVE, GROOVED - FOR PUMP DISCHARGE
4a. 3" GALVANIZED SCHEDULE 40 GROOVED (LENGTH AS REQUIRED)
4b. 3" CHECK VALVE GROOVED CONNECTIONS
5. 3" GROOVED 90
6. PUMP WITH BRONZE IMPELLER, RATED FOR 100 GPM AT 65 PSI INCREASE, WITH 7.5 HP, 3 PHASE, 3450 RPM, 230/460 ODP MOTOR.
7. PRESSURE GAUGE - LIQUID FILLED 0 - 160 PSI.
8. 115 VOLT, 100 CFM AXIAL COOLING FAN
9. HOODED COVER
10. STEEL ENCLOSURE- TWO PIECE STEEL SIZE 48"x36"x40"x36", TWIST TOP, SLANTED ROOF, POWDER COATED DARK GREEN COLOR. ALL STEEL BRACKETS AND HARDWARE
11. DETECTOR TRANSDUCER PA 8224 0-145 PSI.
12. FUJI FRENIC5-P2X, 47 AMP, VFD, 60 AMP CIRCUIT BREAKER, 230 VOLT SINGLE-PHASE INPUT, THREE-PHASE OUTPUT, WITH (2) PUMP START RELAY TERMINALS, CONTROLS WITH RELAY RESET FOR TEMPERATURE SWITCH.
13. 3" NIBCO GD4765-3 BUTTERFLY VALVE-BYPASS AND SUCTION
14. LEVEL CONCRETE PAD SIZE 48"x54", 4" THICK, AND 1" ABOVE SURROUNDING GRADE. TOOL EDGES 1/2". NOTE: THE INLET OUTLET ARE LOCATED ON THE RIGHT SIDE FACING THE FRONT. ALLOW 36" CLEARANCE IN FRONT AND REAR FOR SERVICE ACCESS
15. CUSTOM TEMPERATURE SWITCH PUMP

NOTE: SINGLE-PHASE 230 VOLT ELECTRICAL SERVICE WITH 60 AMP BREAKER WITH GROUND AND CONTROL WIRES ARE REQUIRED. THE TWO CONDUITS AND WIRES ARE CONNECTED TO THE PANEL TERMINALS INSIDE THE ENCLOSURE. CUSTOM PUMP & POWER INC. TO PROVIDE SHOP ASSEMBLY, STARTUP, TRAINING AND OWNERS MANUAL. PHONE: (916) 429-3729, 4 WATER REEF COURT, SACRAMENTO, CA., 95831

1/L7 **BOOSTER PUMP**
NOT TO SCALE

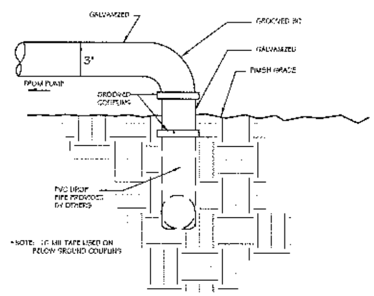

3" DROP PIPE

IRRIGATION WATER CALCULATIONS

MAXIMUM APPLIED WATER ALLOWANCE (MAWA)
MAWA = (ETo) (0.62) [(0.7xLA) + (0.3xSLA)]
MAWA = (57) (0.62) [(0.7x109475)+(0.3x154681)] = 3,287,920

ESTIMATED TOTAL WATER USE (ETWU)
ETWU = (ETo) (0.62) (PF x HA / IE + SLA)
ETWU = (57) (0.62) (27704 / .8 + 54681) = 3,156,250

ETo = Reference Evapotranspiration (inches)
PF = Plant Factor
HA = Hydrozone Area (high, medium, and low water use areas) (square ft)
LA = Landscape Area including SLA
SLA = Special Landscape Area (square ft)
0.7 = ET Adjustment Factor
0.3 = Additional Water Allowance for SLA
0.62 = Conversion Factor (to gallons)
IE = Irrigation Efficiency

IRRIGATION STANDARDS NOTES

1. SEE GENERAL NOTES ON COVER SHEET L-1.
2. SEE SPECIAL PROVISIONS AND DETAILS FOR ADDITIONAL INFORMATION AND REQUIREMENTS.
3. PLANS ARE DIAGRAMMATIC, ALL DIMENSIONS, QUANTITIES AND MATERIALS SHALL BE VERIFIED BY IRRIGATION CONTRACTOR. CONTRACTOR SHALL INSTALL ADDITIONAL HEADS, AS NEEDED, TO PROVIDE ADEQUATE COVERAGE AT NO ADDITIONAL COST TO THE OWNER.
4. THE SYSTEM IS DESIGNED TO OPERATE AT 65 P.S.I. BOOST AT THE POINT OF CONNECTION WITH A PUMP, WITH A MAXIMUM FLOW DEMAND OF 80 GPM. THE IRRIGATION SHALL VERIFY THIS PRESSURE ON SITE PRIOR TO INSTALLATION OF IRRIGATION EQUIPMENT. IF THERE IS A DISCREPANCY, THE IRRIGATION CONTRACTOR SHALL NOTIFY THE LANDSCAPE ARCHITECT, IMMEDIATELY, IN WRITING SO ADJUSTMENTS CAN BE MADE.
5. ALL LOCAL CODES AND ORDINANCES SHALL BE COMPLIED WITH. IF THERE IS A CONFLICT, THE CONTRACTOR SHALL NOTIFY THE LANDSCAPE ARCHITECT IMMEDIATELY IN WRITING. ALL WORK AND MATERIALS SHALL COMPLY WITH THE CITY OF SACRAMENTO STANDARD CONSTRUCTION SPECIFICATIONS, DATED JUNE 2007, & WITH THE PROJECT SPECIFICATIONS.
6. SLEEVES:
   A. ALL PIPING AND 24 VOLT WIRING PASSING UNDER PAVING OR GRAVEL ROADS SHALL BE SLEEVED.
   B. THE IRRIGATION CONTRACTOR IS RESPONSIBLE FOR COORDINATION WITH THE PAVING CONTRACTOR FOR INSTALLATION OF SLEEVES.
7. ALL PIPING UNDER PAVING SHALL BE INSTALLED IN SEPARATE SCH. 40 SLEEVES @ 24" MIN. DEPTH BELOW GRADE AND HAVE SAND BACKFILL, 6" MIN. ABOVE AND BELOW PIPE. ALL WIRING UNDER PAVEMENT SHALL BE INSTALLED IN PVC SCH 40. ELECTRICAL CONDUIT SHALL EXTEND 6" BEYOND EDGE OF PAVEMENT OR CURB. ALL SLEEVES & CONDUIT SHALL BE INSTALLED PRIOR TO THE PAVEMENT INSTALLATION.
8. THE IRRIGATION CONTRACTOR SHALL LAYOUT ALL WORK PRIOR TO TRENCHING OPERATIONS TO DETERMINE IF MINOR MODIFICATIONS WILL BE REQUIRED. PLANTING CONTRACTOR SHALL STAKE TREE LOCATIONS PRIOR TO IRRIGATION LATERAL INSTALLATION.
9. CONTRACTOR SHALL COORDINATE 120 VAC ELECTRICAL SUPPLY AND SHALL STUB APPROPRIATE POWER SUPPLY AT CONTROLLER LOCATION.
10. MAINLINE SHALL BE PVC CLASS 315 SOLVENT GLUED FOR 2 1/2" & GREATER AND PVC SCHEDULE 40 FOR LESS THAN 2 1/2" WITH SOLVENT WELD SCHEDULE 80 NIPPLES AND FITTINGS. COVER FOR MAINLINE SHALL BE 24". SOLVENT WELD MAINLINE FITTING WITHIN SLEEVES. THRUST BLOCKS SHALL BE PROVIDED AT ALL CHANGES IN PIPE DIRECTION.
11. LATERAL LINES SHALL BE PVC CLASS 200 PIPE WITH SCHEDULE 80 NIPPLES AND SCHEDULE 80 SOLVENT WELD FITTINGS. MINIMUM COVER 18".
12. SPRINKLER AND ROTOR HEADS IN TURF AREA SHALL HAVE 6" POP. SPRINKLER AND ROTOR HEADS IN PLANTER AREA SHALL HAVE 12" POP.
13. ALL PIPING, RCVS AND QCVS SHALL BE INSTALLED IN PLANTING AREA (PIPING MAY PASS UNDER PAVING AS REQUIRED). RCVS AND QCVS SHALL BE INSTALLED ADJACENT TO WALKS OR PAVING (AS PER DETAIL).
14. AUTOMATIC CONTROLLER SHALL BE PROGRAMMED TO OPERATE THE IRRIGATION SYSTEM AT A HEALTHY GROWING CONDITION AND TO MINIMIZE RUN-OFF OR EXCESSIVE WATERING.
15. CONTROL WIRES SHALL BE COLOR CODED AS FOLLOWS:
   -FULL CIRCLE ROTORS: BLUE
   -ADJUSTED ROTORS: RED
   -SPRAYHEADS: GREEN
   -TREE BUBBLERS: BROWN
16. CONTRACTOR SHALL MAINTAIN THE EXISTING IRRIGATION SYSTEM UNTIL THE NEW IRRIGATION SYSTEM IS OPERATIONAL. (SEE SHEET DEMOLITION PLAN FOR EXISTING IRRIGATION PLAN)
17. CONTRACTOR SHALL COORDINATE ALL WORK WITH OTHER TRADES SO PROGRESS OF WORK IS NOT INTERRUPTED AND CAN BE COMPLETED IN A TIMELY MANNER.
18. CONTRACTOR SHALL ADJUST THE PLACEMENT AND RADIUS OF SPRINKLERS AS PER FIELD CONDITIONS TO ACHIEVE FULL COVERAGE OF ALL PLANTED AREAS, AND TO MINIMIZE OVER-SPRAY ONTO ADJACENT PAVING AREAS, FENCES AND PROPERTY LINES.
19. PROVIDE STATION IDENTIFICATION TAGS ON ALL VALVES. TAG NUMBER TO MATCH STATION NUMBER ON CLOCK.
20. PRESSURE TEST FOR THE MAINLINE SHALL CONSIST OF 150 PSI FOR TWO HOURS WITH ZERO PRESSURE LOSS. PRESSURE TEST SHALL BE PERFORMED WITH THE CONSTRUCTION INSPECTOR ON SITE AND SHALL BE DONE BEFORE THE RCVS ARE INSTALLED AND NO LATERAL LINE TESTING IS REQUIRED.
21. IRRIGATION COVERAGE TEST SHALL BE DONE WITH THE CONSTRUCTION INSPECTOR AND THE CITY IRRIGATION MANAGER. THE COVERAGE TEST SHALL BE DONE AFTER ALL THE IRRIGATION HEADS AND VALVES ARE INSTALLED AND PRIOR TO INSTALLATION OF PLANTS AND BARK MULCH.
22. THE CONTRACTOR SHALL HAVE THE IRRIGATION AUDITED BY A CERTIFIED IRRIGATION AUDITOR. THE APPROVED IRRIGATION AUDIT AND A CERTIFICATE OF COMPLETION SHALL BE COMPLETED AS OUTLINED IN THE SPECIFICATIONS AND CITY CODE SECTION 15.92.

REPEATER ASSEMBLY TO INCLUDE
Repeater model as specified
Enclosure model as specified
Options as specified
Template & Bolts
UL Listed 8' Copper ground rod
Ground rod clamp or Cadweld
10' of #6 grounding wire

CABLE & WIRE NOTE
All cables & electrical wires must be run in conduit.

GROUNDING NOTE
Ground rod shall be located no closer than 8 ft. and no further than 12 ft. from the controller unless otherwise specified.
A 10" round valve box shall be installed over the ground rod for location and maintenance purposes

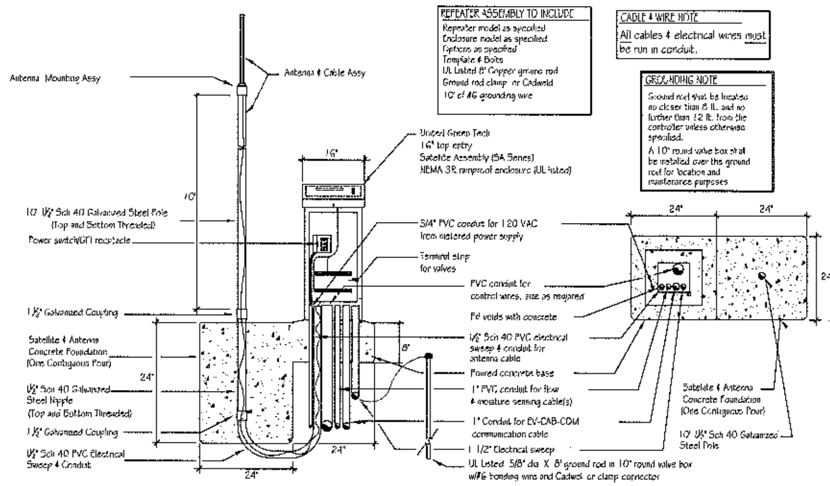

2/L7 **IRRIGATION CONTROLLER W/ HIGH GAIN ANTENNA**
NOT TO SCALE

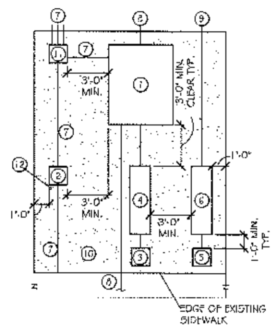

LEGEND

1	IRRIGATION BOOSTER PUMP
2	IRRIGATION CONTROLLER & ENCLOSURE
3	2" IRRIGATION WATER METER
4	2" IRRIGATION BACKFLOW PREVENTER
5	2" DOMESTIC WATER METER
6	2" DOMESTIC BACKFLOW PREVENTER
7	CONDUIT (FROM ELECTRICAL PEDESTAL). SEE ELECTRICAL PLANS
8	IRRIGATION MAINLINE
9	DOMESTIC WATER SERVICE LINE
10	4" CONCRETE PAD
11	TESCO PANEL (SEE ELECTRICAL PLANS)
12	HIGH GAIN ANTENNA

NOTE:
1. SEE ELECTRICAL PLANS FOR CONDUIT AND WIRE, CONNECTIONS AND SIZES.
2. SEE IRRIGATION PLANS FOR BACKFLOW, BOOSTER PUMP AND MAINLINE CONNECTION AND INSTALLATION DETAILS.

3/L7 **IRRIGATION EQUIPMENT LAYOUT**
NOT TO SCALE

811 Know what's below. Call before you dig.

CITY OF SACRAMENTO
DEPARTMENT OF PARKS & RECREATION
PARK, PLANNING & DEVELOPMENT SERVICES
LANDSCAPE ARCHITECTURE SECTION
915 I STREET, 3RD FLOOR, SACRAMENTO, CA 95814

DOGWOOD PARK
IRRIGATION PLAN

LANDSCAPE ARCHITECT D. DAY
DESIGN BY/DRAWN BY D. DAY/J. WIESEMANN
CAD FILE
DATE OCT. 27, 2017
SCALE AS SHOWN
P. N. L19185000
REVISIONS

SHEET NO. L7 OF 21

Packet Page 2021 of 2531

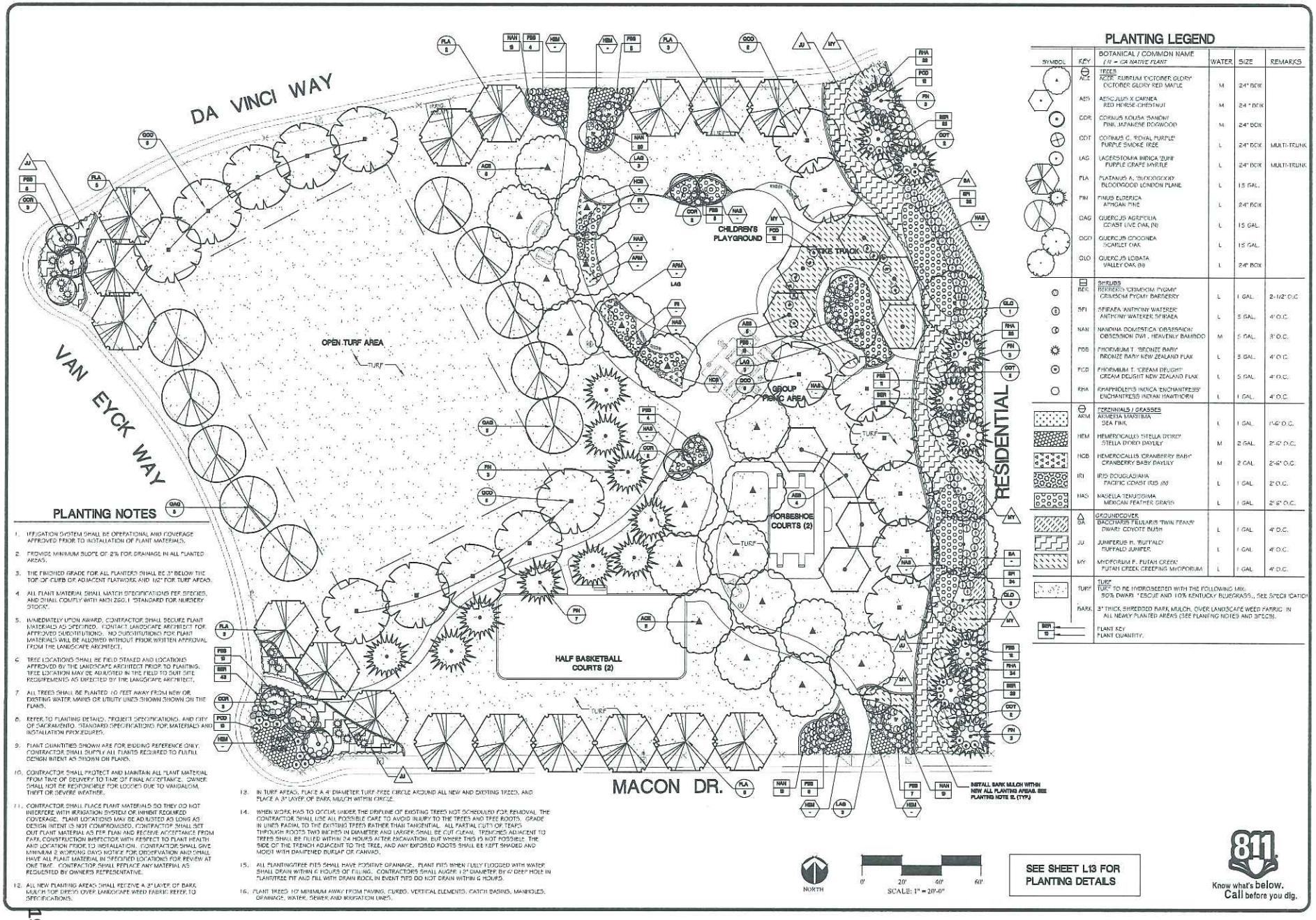

PLANTING LEGEND

SYMBOL	KEY	BOTANICAL / COMMON NAME (N = CA NATIVE PLANT)	WATER	SIZE	REMARKS
		TREES			
	ACE	ACER RUBRUM 'OCTOBER GLORY' OCTOBER GLORY RED MAPLE	M	24" BOX	
	AES	AESCULUS X CARNEA RED HORSE CHESTNUT	M	24" BOX	
	COR	CORNUS KOUSA 'SANONI' PINK JAPANESE DOGWOOD	M	24" BOX	
	COT	COTINUS C. 'ROYAL PURPLE' PURPLE SMOKE TREE	L	24" BOX	MULTI-TRUNK
	LAG	LAGERSTOMIA INDICA 'ZUNI' PURPLE GRAPE MYRTLE	L	24" BOX	MULTI-TRUNK
	PLA	PLATANUS A. 'BLOODGOOD' BLOODGOOD LONDON PLANE	L	15 GAL.	
	PIN	PINUS ELDERICA AFRICAN PINE	L	24" BOX	
	QAG	QUERCUS AGRIFOLIA COAST LIVE OAK (N)	L	15 GAL.	
	QCO	QUERCUS COCCINEA SCARLET OAK	L	15 GAL.	
	QLO	QUERCUS LOBATA VALLEY OAK (N)	L	24" BOX	
		SHRUBS			
	BEC	BERBERIS 'CRIMSON PYGMY' CRIMSON PYGMY BARBERRY	L	1 GAL.	2-1/2" O.C.
	SFI	SPIRAEA 'ANTHONY WATERER' ANTHONY WATERER SPIRAEA	L	5 GAL.	4' O.C.
	NAN	NANDINA DOMESTICA 'OBSESSION' OBSESSION PAL, HEAVENLY BAMBOO	M	5 GAL.	3' O.C.
	FDB	PHORMIUM T. 'BRONZE BABY' BRONZE BABY NEW ZEALAND FLAX	L	5 GAL.	4' O.C.
	FCD	PHORMIUM T. 'CREAM DELIGHT' CREAM DELIGHT NEW ZEALAND FLAX	L	5 GAL.	4' O.C.
	RHA	RHAPHIOLEPIS INDICA 'ENCHANTRESS' ENCHANTRESS INDIAN HAWTHORN	L	1 GAL.	4' O.C.
		PERENNIALS / GRASSES			
	ARM	ARMERIA MARITIMA SEA PINK	L	1 GAL.	1'-6" O.C.
	HEM	HEMEROCALLIS 'STELLA D'ORO' STELLA D'ORO DAYLILY	M	2 GAL.	2'-6" O.C.
	HCB	HEMEROCALLIS 'CRANBERRY BABY' CRANBERRY BABY DAYLILY	M	2 GAL.	2'-6" O.C.
	IRI	IRIS DOUGLASIANA PACIFIC COAST IRIS (N)	L	1 GAL.	2' O.C.
	MAS	MASELLA TENUISSIMA MEXICAN FEATHER GRASS	L	1 GAL.	2'-6" O.C.
		GROUNDCOVER			
	BA	BACCHARIS PILULARIS 'TWIN PEAKS' DWARF COYOTE BUSH	L	1 GAL.	4' O.C.
	JU	JUNIPERUS H. 'BUFFALO' BUFFALO JUNIPER	L	1 GAL.	4' O.C.
	MY	MYOPORUM P. 'PUTAH CREEK' PUTAH CREEK CREEPING MYOPORUM	L	1 GAL.	4' O.C.
	TURF	TURF TURF TO BE HYDROSEEDED WITH THE FOLLOWING MIX: 50% DWARF FESCUE AND 10% KENTUCKY BLUEGRASS., SEE SPECIFICATION			
	BARK	3" THICK SHREDDED BARK MULCH. OVER LANDSCAPE WEED FABRIC IN ALL NEWLY PLANTED AREAS (SEE PLANTING NOTES AND SPECS).			
	BER / 5	PLANT KEY / PLANT QUANTITY.			

PLANTING NOTES

1. IRRIGATION SYSTEM SHALL BE OPERATIONAL AND COVERAGE APPROVED PRIOR TO INSTALLATION OF PLANT MATERIALS.
2. PROVIDE MINIMUM SLOPE OF 2% FOR DRAINAGE IN ALL PLANTED AREAS.
3. THE FINISHED GRADE FOR ALL PLANTERS SHALL BE 3" BELOW THE TOP OF CURB OF ADJACENT FLATWORK AND 1/2" FOR TURF AREAS.
4. ALL PLANT MATERIAL SHALL MATCH SPECIFICATIONS PER SPECIES, AND SHALL COMPLY WITH ANSI Z60.1 "STANDARD FOR NURSERY STOCK".
5. IMMEDIATELY UPON AWARD, CONTRACTOR SHALL SECURE PLANT MATERIALS AS SPECIFIED. CONTACT LANDSCAPE ARCHITECT FOR APPROVED SUBSTITUTIONS. NO SUBSTITUTIONS FOR PLANT MATERIALS WILL BE ALLOWED WITHOUT PRIOR WRITTEN APPROVAL FROM THE LANDSCAPE ARCHITECT.
6. TREE LOCATIONS SHALL BE FIELD STAKED AND LOCATIONS APPROVED BY THE LANDSCAPE ARCHITECT PRIOR TO PLANTING. TREE LOCATION MAY BE ADJUSTED IN THE FIELD TO SUIT SITE REQUIREMENTS AS DIRECTED BY THE LANDSCAPE ARCHITECT.
7. ALL TREES SHALL BE PLANTED 10 FEET AWAY FROM NEW OR EXISTING WATER MAINS OR UTILITY LINES SHOWN SHOWN ON THE PLANS.
8. REFER TO PLANTING DETAILS, PROJECT SPECIFICATIONS, AND CITY OF SACRAMENTO STANDARD SPECIFICATIONS FOR MATERIALS AND INSTALLATION PROCEDURES.
9. PLANT QUANTITIES SHOWN ARE FOR BIDDING REFERENCE ONLY. CONTRACTOR SHALL SUPPLY ALL PLANTS REQUIRED TO FULFILL DESIGN INTENT AS SHOWN ON PLANS.
10. CONTRACTOR SHALL PROTECT AND MAINTAIN ALL PLANT MATERIAL FROM TIME OF DELIVERY TO TIME OF FINAL ACCEPTANCE. OWNER SHALL NOT BE RESPONSIBLE FOR LOSSES DUE TO VANDALISM, THEFT OR SEVERE WEATHER.
11. CONTRACTOR SHALL PLACE PLANT MATERIALS SO THEY DO NOT INTERFERE WITH IRRIGATION SYSTEM OR INHIBIT REQUIRED COVERAGE. PLANT LOCATIONS MAY BE ADJUSTED AS LONG AS DESIGN INTENT IS NOT COMPROMISED. CONTRACTOR SHALL SET OUT PLANT MATERIAL AS PER PLAN AND RECEIVE ACCEPTANCE FROM PARK CONSTRUCTION INSPECTOR WITH RESPECT TO PLANT HEIGHT AND LOCATION PRIOR TO INSTALLATION. CONTRACTOR SHALL GIVE MINIMUM 2 WORKING DAYS NOTICE FOR OBSERVATION AND SHALL HAVE ALL PLANT MATERIAL IN SPECIFIED LOCATIONS FOR REVIEW AT ONE TIME. CONTRACTOR SHALL REPLACE ANY MATERIAL AS REQUESTED BY OWNER'S REPRESENTATIVE.
12. ALL NEW PLANTING AREAS SHALL RECEIVE A 3" LAYER OF BARK MULCH TOP DRESS OVER LANDSCAPE WEED FABRIC. REFER TO SPECIFICATIONS.
13. IN TURF AREAS, PLACE A 4' DIAMETER TURF-FREE CIRCLE AROUND ALL NEW AND EXISTING TREES, AND PLACE A 3" LAYER OF BARK MULCH WITHIN CIRCLE.
14. WHEN WORK HAS TO OCCUR UNDER THE DRIPLINE OF EXISTING TREES NOT SCHEDULED FOR REMOVAL, THE CONTRACTOR SHALL USE ALL POSSIBLE CARE TO AVOID INJURY TO THE TREES AND TREE ROOTS. GRADE IN LINES RADIAL TO THE EXISTING TREES RATHER THAN TANGENTIAL. ALL PARTIAL CUTS OR TEARS THROUGH ROOTS TWO INCHES IN DIAMETER AND LARGER SHALL BE CUT CLEAN. TRENCHES ADJACENT TO TREES SHALL BE FILLED WITHIN 24 HOURS AFTER EXCAVATION, BUT WHERE THIS IS NOT POSSIBLE, THE SIDE OF THE TRENCH ADJACENT TO THE TREE, AND ANY EXPOSED ROOTS SHALL BE KEPT SHADED AND MOIST WITH DAMPENED BURLAP OR CANVAS.
15. ALL PLANTING/TREE PITS SHALL HAVE POSITIVE DRAINAGE. PLANT PITS WHEN FULLY FLOODED WITH WATER SHALL DRAIN WITHIN 6 HOURS OF FILLING. CONTRACTORS SHALL AUGER 12" DIAMETER BY 6' DEEP HOLE IN PLANTTREE PIT AND FILL WITH DRAIN ROCK IN EVENT PITS DO NOT DRAIN WITHIN 6 HOURS.
16. PLANT TREES 10' MINIMUM AWAY FROM PAVING, CURBS, VERTICAL ELEMENTS, CATCH BASINS, MANHOLES, DRAINAGE, WATER, SEWER AND IRRIGATION LINES.

CITY OF SACRAMENTO
DEPARTMENT OF PARKS & RECREATION
PARK, PLANNING & DEVELOPMENT SERVICES
LANDSCAPE ARCHITECTURE SECTION
915 I STREET, 3RD FLOOR, SACRAMENTO, CA 95814

DOGWOOD PARK DEVELOPMENT - CONSTRUCTION PLANS (L19185000)

DOGWOOD PARK
PLANTING PLAN

LANDSCAPE ARCHITECT D. DAY
DESIGN BY/DRAWN BY D. DAY / J. WIESEMANN
CAD FILE
DATE OCT. 27, 20
SCALE AS SHOWN
P. N. L19185000
REVISIONS

SHEET NO. L8 OF 21

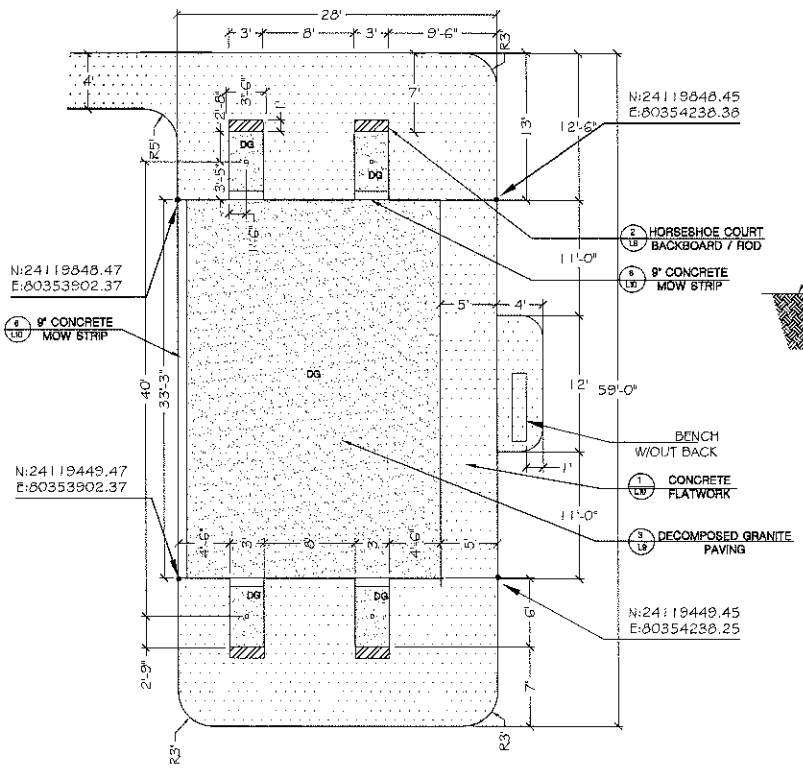

1 L9 HORSESHOE COURT LAYOUT
NOT TO SCALE

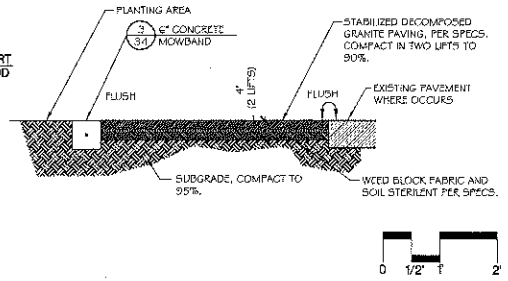

3 L9 STABALIZED DECOMPOSED GRANITE PAVING
NOT TO SCALE

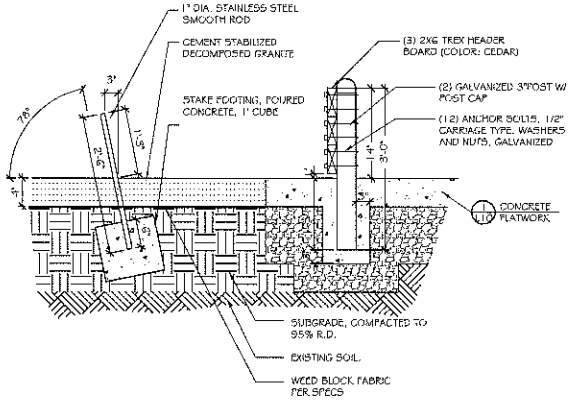

2 L9 HORSESHOE COURT BACKBOARD/ROD
NOT TO SCALE

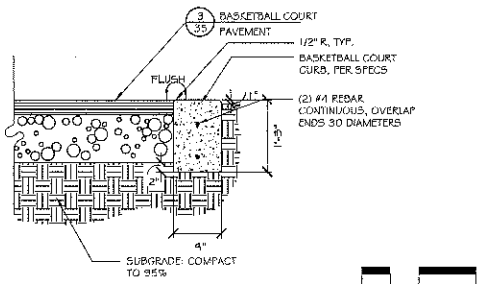

4 L9 BASKETBALL COURT CURB
NOT TO SCALE

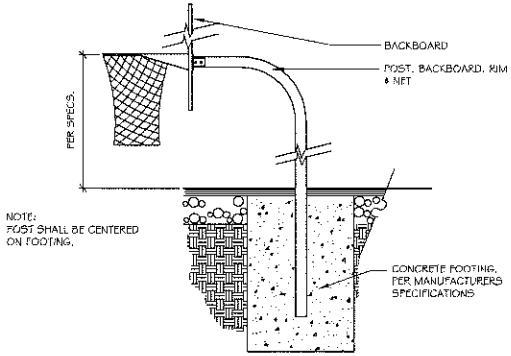

5 L9 BASKETBALL GOAL
NOT TO SCALE

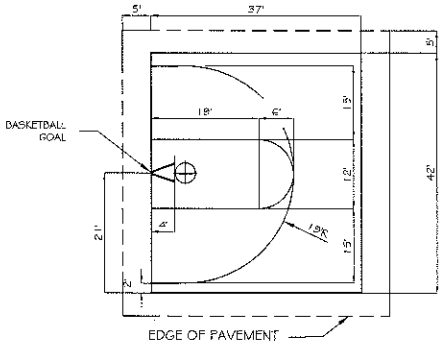

NOTE: ALL PAINTED LINES TO BE 2" WIDE.

6 L9 BASKETBALL COURT STRIPING PLAN
NOT TO SCALE

811 Know what's below. Call before you dig.

CITY OF SACRAMENTO
DEPARTMENT OF PARKS & RECREATION
PARK, PLANNING & DEVELOPMENT SERVICES
LANDSCAPE ARCHITECTURE SECTION
915 I STREET, 3RD FLOOR, SACRAMENTO, CA 95814

DOGWOOD PARK DEVELOPMENT - CONSTRUCTION PLANS (L19185000)

DOGWOOD PARK
HORSESHOES/ BASKETBALL
COURT PLAN

LANDSCAPE ARCHITECT
D. DAY
DESIGN BY/DRAWN BY
D. DAY/J. WESSELMAN
CAD FILE
DATE OCT. 27, 20
SCALE AS SHOWN
F. N. L19165000
REVISIONS

SHEET NO.
L9 OF 21

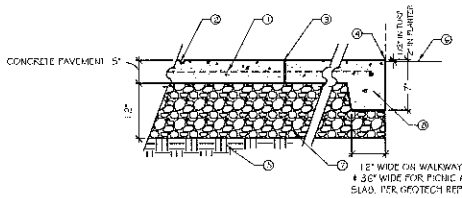

KEY
1. CONCRETE PAVEMENT WITH #3 REBAR 24" O.C. EACH WAY, LOCATED AT MID DEPTH OF CONCRETE. MEDIUM BROOM FINISH PERPENDICULAR TO WALKWAY EDGE.
2. SCORE JOINT
3. EXPANSION JOINT
4. 1" R. TOOLED EDGE. TYP.
5. SUBGRADE COMPACTED PER GEOTECHNICAL REPORT.
6. FINISH GRADE
7. AGGREGATE BASE. COMPACTED TO 95% PER GEOTECHNICAL REPORT.
8. THICKEN EXTERIOR EDGES ON ALL CONCRETE PAVEMENT 8" AND WIDER.

1 / L10 5" REINFORCED CONCRETE FLATWORK (FOR VEHICULAR/ PICNIC AREA FLATWORK)
NOT TO SCALE

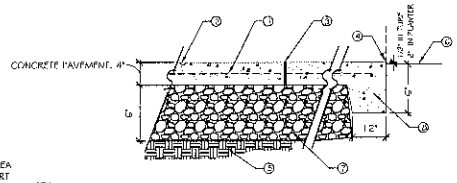

KEY
1. CONCRETE PAVEMENT WITH #3 REBAR 24" O.C. EACH WAY, LOCATED AT MID DEPTH OF CONCRETE. MEDIUM BROOM FINISH PERPENDICULAR TO WALKWAY EDGE.
2. SCORE JOINT
3. EXPANSION JOINT
4. TOOLED EDGE. TYP.
5. SUBGRADE COMPACTED PER GEOTECHNICAL REPORT.
6. FINISH GRADE
7. AGGREGATE BASE. COMPACTED TO 95% PER GEOTECHNICAL REPORT.
8. THICKEN EXTERIOR EDGES ON ALL CONCRETE 5" AND WIDER.

2 / L10 4" REINFORCED CONCRETE FLATWORK (FOR PADS AND PEDESTRIAN FLATWORK)
NOT TO SCALE

PAVEMENT DESIGN

	A	B
BASKETBALL COURT	3"	12"
AT STREET	PER CITY OF SACRAMENTO STANDARDS	

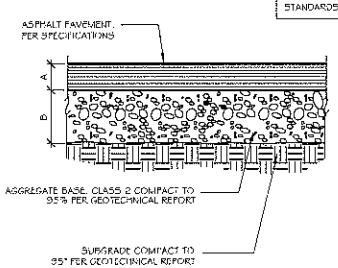

3 / L10 ASPHALTIC CONCRETE PAVEMENT
NOT TO SCALE

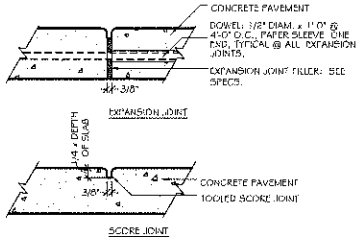

4 / L10 EXPANSION / SCORE JOINT
NOT TO SCALE

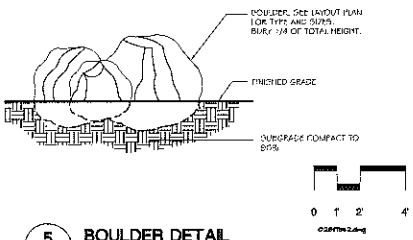

5 / L10 BOULDER DETAIL
NOT TO SCALE

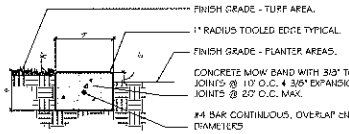

NOTE:
PROVIDE EXPANSION JOINTS ON CURB @ 10'-0" O.C..

6 / L10 9" CONCRETE MOW STRIP
NOT TO SCALE

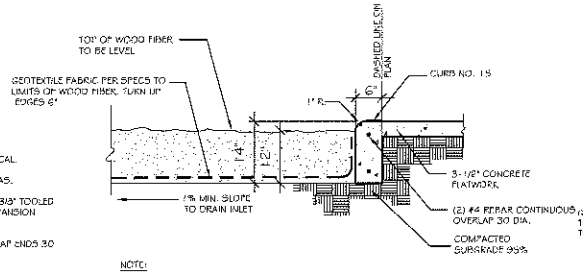

NOTE:
PLAY AREA CURB AND CONCRETE FLATWORK SHALL BE A MONOLITHIC POUR. DO NOT SCORE 6" PLAY AREA CURB.

7 / L10 PLAY AREA CURB AT CONCRETE PAVEMENT
NOT TO SCALE

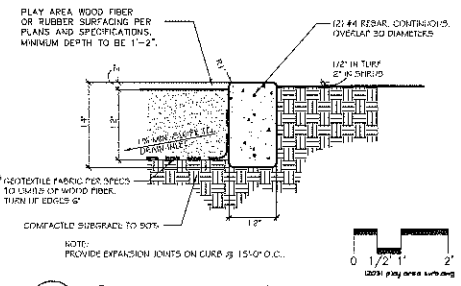

NOTE:
PROVIDE EXPANSION JOINTS ON CURB @ 15'-0" O.C..

8 / L10 6" PLAY AREA CURB/ WOOD FIBER AREA
NOT TO SCALE

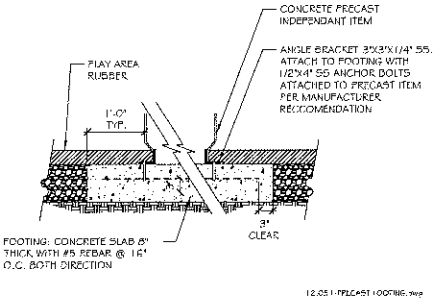

9 / L10 CONCRETE INDEPENDENT ITEM FOOTING
NOT TO SCALE

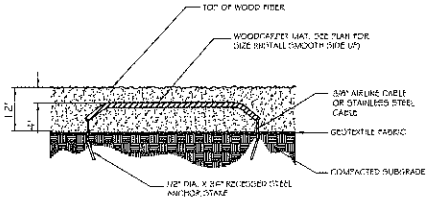

9 / L10 RUBBER MAT DETAIL
NOT TO SCALE

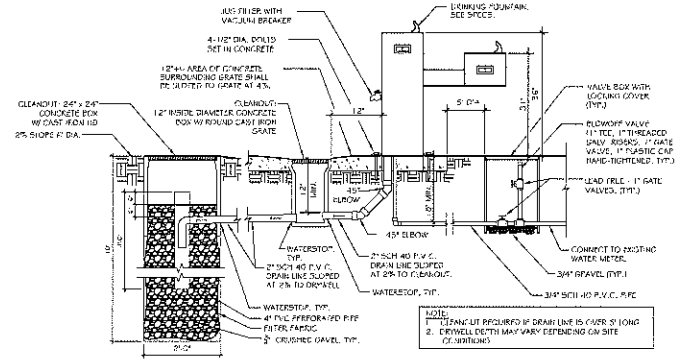

NOTE:
1. CLEANOUT REQUIRED IF DRAIN LINE IS OVER 5' LONG
2. DRYWELL DEPTH MAY VARY DEPENDING ON SITE CONDITIONS

10 / L10 DRINKING FOUNTAIN DETAIL
NOT TO SCALE

811 Know what's below. Call before you dig.

CITY OF SACRAMENTO
DEPARTMENT OF PARKS & RECREATION
PARK, PLANNING & DEVELOPMENT SERVICES
LANDSCAPE ARCHITECTURE SECTION
915 I STREET, 3RD FLOOR, SACRAMENTO, CA 95814

DOGWOOD PARK DEVELOPMENT - CONSTRUCTION PLANS (LP18500)

DOGWOOD PARK CONSTRUCTION DETAILS

LANDSCAPE ARCHITECT D. DAY
DESIGN BY/DRAWN BY D. DAY / L. WIEDEMANN
CAD FILE
DATE OCT. 27, 2011
SCALE AS SHOWN
P. N. L18185000
REVISIONS

SHEET NO. L10 OF 21

Packet Page 2024 of 2531

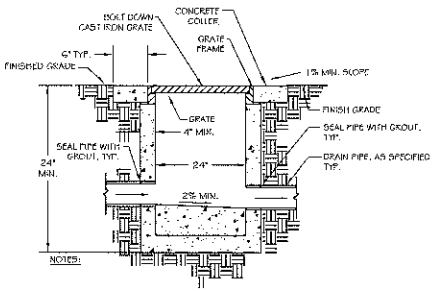

NOTES:

1. ROUND CAST IRON GRATE AND FRAME SHALL BE JENSEN MODEL A1024 OR APPROVED EQUAL.
2. ROUND CATCH BASIN MAY BE POURED IN PLACE OR PRECAST. A 6" CONCRETE COLLAR SURROUNDS CATCH BASIN.
4. GROUT SHALL BE NON-SHRINK EPOXY GROUT, MEADOWS "SEAL-TIGHT", OR APPROVED EQUAL.
5. GROUT THE BOTTOM OF THE CATCH BASIN TO ELIMINATE STANDING WATER AT THE BOTTOM OF THE D.I.

1 / L11 CATCH BASIN

NOT TO SCALE

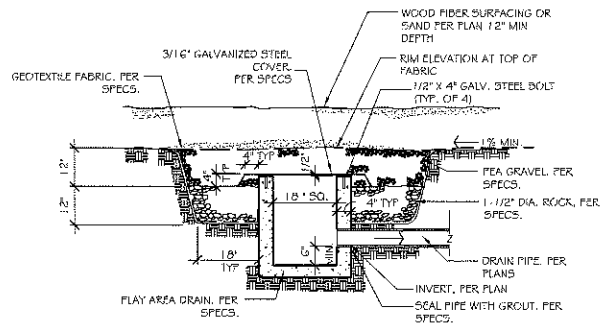

2 / L11 PLAY AREA CATCH BASIN

NOT TO SCALE

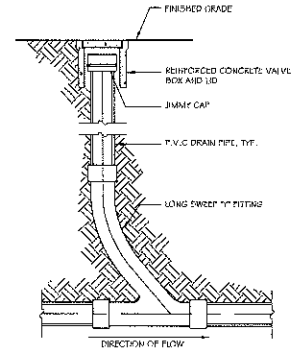

CITY OF SAC CLEAN OUT.DWG

3 / L11 CLEAN OUT DETAIL

NOT TO SCALE

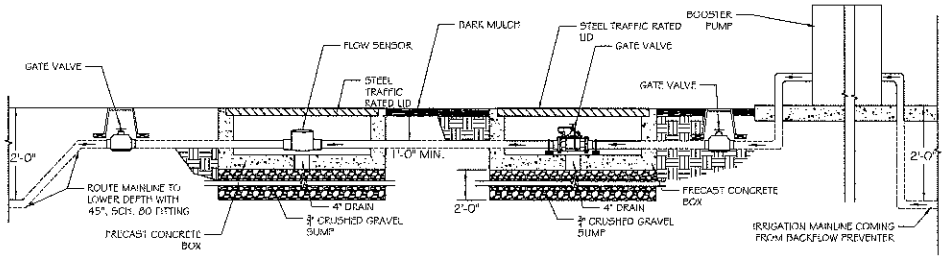

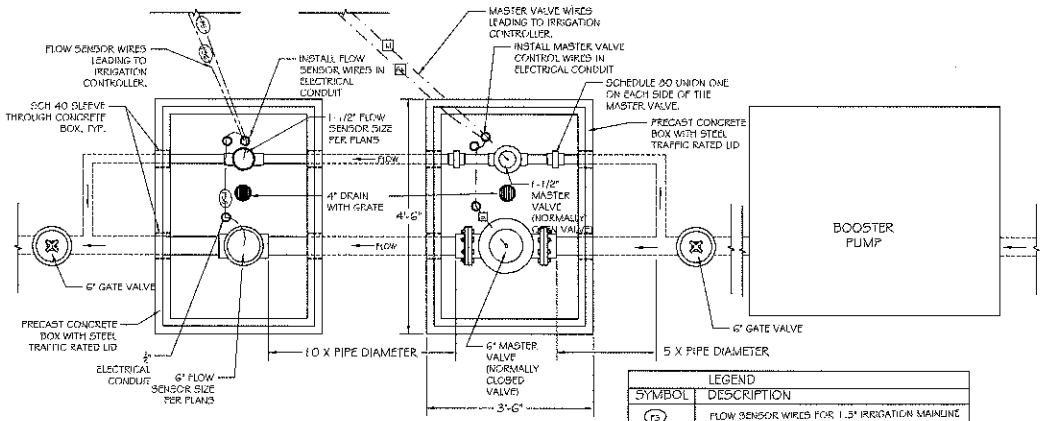

NOTE:
FLOW SENSOR CABLE TO BE EV-CAB-BEN INSTALL IN CONDUIT. FLOW SENSOR WIRE NOT TO EXCEED 2000 FEET. SEPARATE CABLE MUST BE USED FOR EACH FLOW SENSOR. MASTER VALVE WIRES TO BE DIRECT BURIAL IRRIGATION WIRE.

LEGEND

SYMBOL	DESCRIPTION
FS	FLOW SENSOR WIRES FOR 1.5" IRRIGATION MAINLINE
FS6	FLOW SENSOR WIRES FOR 6" IRRIGATION MAINLINE
M	1.5" MASTER VALVE CONTROL WIRES
M6	6" MASTER VALVE CONTROL WIRES

4 / L11 DUAL MASTER VALVE AND FLOW SENSOR

NOT TO SCALE

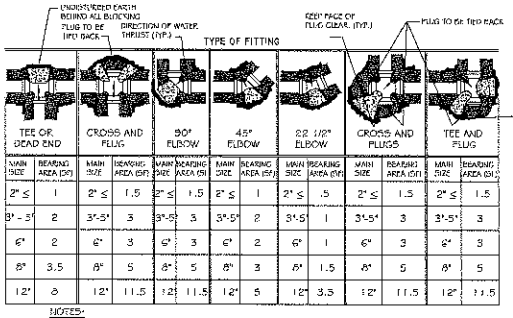

MAIN SIZE	BEARING AREA (SF)	MAIN SIZE	BEARING AREA (SF)	MAIN SIZE	BEARING AREA (SF)	MAIN SIZE	BEARING AREA (SF)	MAIN SIZE	BEARING AREA (SF)	MAIN SIZE	BEARING AREA (SF)	MAIN SIZE	BEARING AREA (SF)
2" ≤	1	2" ≤	1.5	2" ≤	1.5	2" ≤	1	2" ≤	.5	2" ≤	1.5	2" ≤	1.5
3" - 5"	2	3"-5"	3	3"-5"	3	3"-5"	2	3"-5"	1	3"-5"	3	3"-5"	3
6"	2	6"	3	6"	3	6"	2	6"	1	6"	3	6"	3
8"	3.5	8"	5	8"	5	8"	3	8"	1.5	8"	5	8"	5
12"	8	12"	11.5	12"	11.5	12"	5	12"	3.5	12"	11.5	12"	11.5

NOTES:

1. ABOVE BEARING AREAS BASED ON 150 PSI SERVICE WATER PRESSURE AND 2000 PSF SOIL BEARING CAPACITY. WHERE SOIL CONDITIONS REQUIRE ADJUSTMENT OF ALLOWABLE BEARING PRESSURE, IN THE OPINION OF THE ENGINEER, REQUIRED BLOCKING AREAS WILL BE ADJUSTED.
2. USE 3,000 PSI CONCRETE FOR BLOCKING AS SHOWN ABOVE.
3. VERTICAL CHANGES IN DIRECTION REQUIRE BLOCKING AS SHOWN ABOVE.
4. CONCRETE THRUST BLOCKING SHALL NOT COMPLETELY INUNDATE FITTING.
5. RESTRAINED JOINTS MAY BE USED IN LIEU OF CONCRETE BLOCKING WITH THE APPROVAL OF THE ENGINEER.
6. MAINTAIN 1'-0" CLEARANCE BETWEEN NEW IRRIGATION MAIN AND EXISTING UTILITIES SEE W-106.
7. WRAP MAINLINE FITTINGS WITH 1/4" THICK FOAM WRAP PRIOR TO INSTALLING THRUST BLOCK.

5 / L11 THRUST BLOCKS

NOT TO SCALE

811 Know what's below. Call before you dig.

CITY OF SACRAMENTO
DEPARTMENT OF PARKS & RECREATION
PARK, PLANNING & DEVELOPMENT SERVICES
LANDSCAPE ARCHITECTURE SECTION
915 I STREET, 3RD FLOOR, SACRAMENTO, CA 95814

DOGWOOD PARK DEVELOPMENT - CONSTRUCTION PLANS (L19185000)

DOGWOOD PARK
CONSTRUCTION DETAILS

LANDSCAPE ARCHITECT D. DAY
DESIGN BY/DRAWN BY D. DAY /J. WIESEMANN
CAD FILE
DATE OCT. 27, 2023
SCALE AS SHOWN
P. N. L19185000
REVISIONS

SHEET NO. L11 OF 21

Packet Page 2025 of 2531

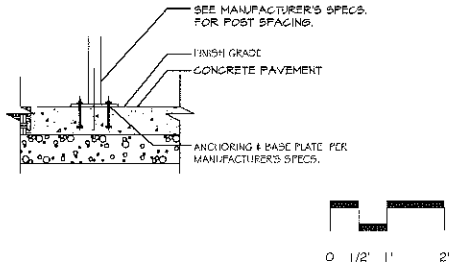

1 L12 **SURFACE MOUNT**
SANITARY PLAIN DRAIN

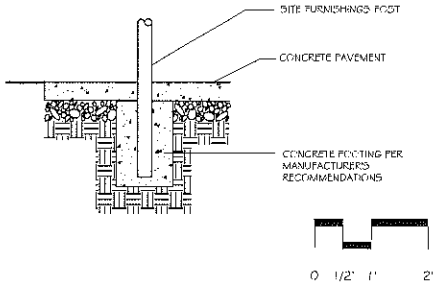

2 L12 **IN-GROUND MOUNT**
NOT TO SCALE

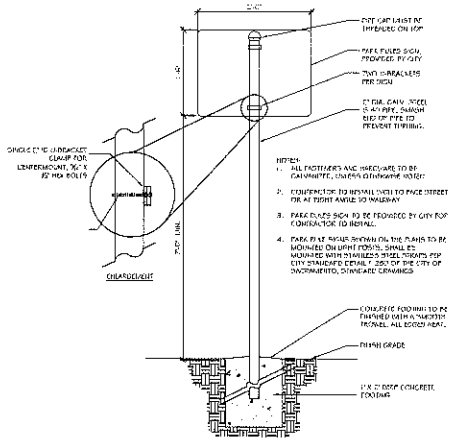

3 L12 **RULE SIGN MOUNTING DETAIL**
NOT TO SCALE

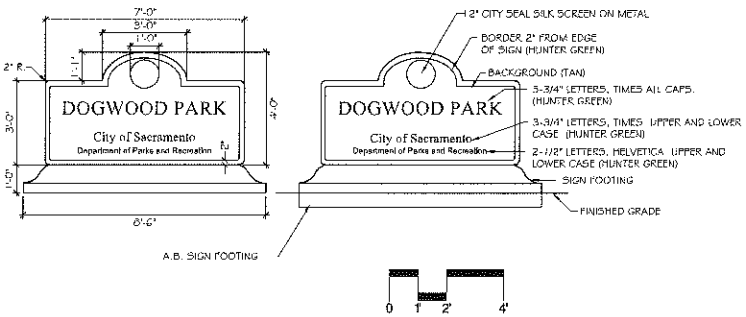

4 L12 **CONCRETE PARK SIGN**
NOT TO SCALE

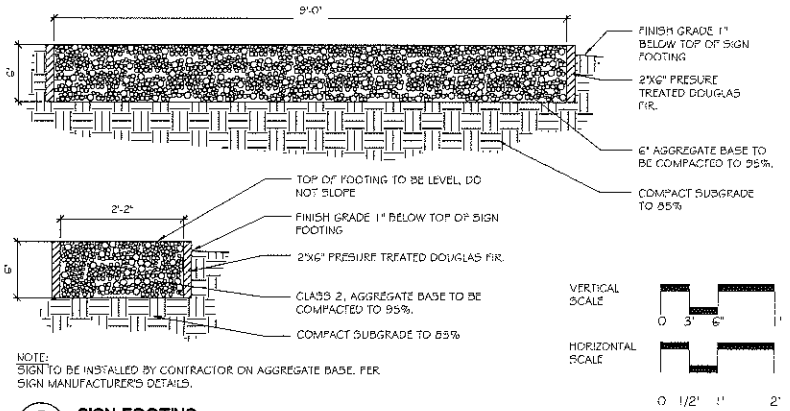

NOTE:
SIGN TO BE INSTALLED BY CONTRACTOR ON AGGREGATE BASE. PER SIGN MANUFACTURER'S DETAILS.

5 L12 **SIGN FOOTING**
NOT TO SCALE

811 Know what's **below.** **Call** before you dig.

CITY OF SACRAMENTO
DEPARTMENT OF PARKS & RECREATION
PARK, PLANNING & DEVELOPMENT SERVICES
LANDSCAPE ARCHITECTURE SECTION
915 I STREET, 3RD FLOOR, SACRAMENTO, CA 95814

DOGWOOD PARK DEVELOPMENT - CONSTRUCTION PLANS (L19185000)

DOGWOOD PARK
CONSTRUCTION DETAILS

LANDSCAPE ARCHITECT
D. DAY
DESIGN BY/DRAWN BY
D. DAY/J. WIRSEMANN
CAD FILE
DATE OCT 27, 20
SCALE AS SHOWN
P. N. L19185000
REVISIONS

SHEET NO.
L12 OF 21

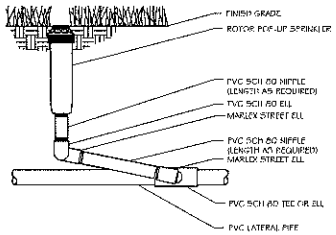

1 L13 ROTOR
NOT TO SCALE

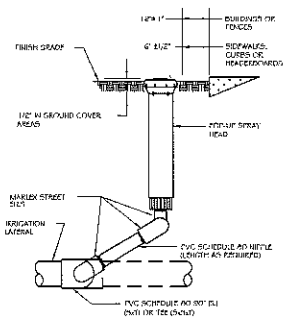

2 L13 SPRAY HEAD
NOT TO SCALE

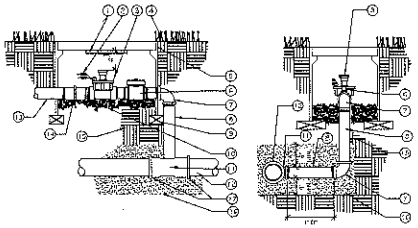

NOTES:
1. VALVE MANUFACTURER SHALL SECURE TO INSIDE WALL OF VALVE BOX.
2. VALVE CONTROL WIRE PROVIDE 24" DIAGONAL PATCH AT ALL STRUCTURES OR 50' EXCESS OF WIRE IN A 1" DIA. COIL.
3. REMOTE CONTROL VALVE.
4. FINISH GRADE.
5. 1.5" X 20" BANDED EXTERMINATOR, LOCKING VALVE BOX.
6. FOIL FOR PVC FULL VALVE.
7. SCH. 80 PVC 90 DEGREE ELL.
8. SCH. 80 PVC NIPPLE.
9. FROM 1 TO 19 EA. CORNER.
10. PEA GRAVEL.
11. SCH. 80 PVC TEE.
12. PVC LATERAL LINE.
13. IRRIGATION SUPPLY LINE.
14. SCH. 80 UNION.
15. SOIL TO BE WATER LAND AND LATERAL LINES SHALL BE COMPACTED IN 6" LIFTS WITH EACH LIFT COMPACTED TO 85% R.D. IN LANDSCAPED AREAS AND 95% R.D. IN PAVING AREAS.
16. COMPACTED SAND.
17. REMOVE ENOUGH SAND UNDER * TUBING TO MAINTAIN A LEVEL MANLINE.

3 L13 REMOTE CONTROL VALVE
NOT TO SCALE

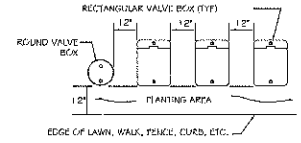

NOTES:
1. CENTER BOXES OVER VALVES.
2. SET BOXES IN GROUND COVER/SHRUB AREA WHERE POSSIBLE.
3. SET BOXES PARALLEL TO EACH OTHER AND PERPENDICULAR TO EDGE.
4. AVOID HEAVILY COMPACTING SOIL AROUND BOXES TO PREVENT DAMAGING VALVE BOXES.

4 L13 VALVE BOX LAYOUT
NOT TO SCALE

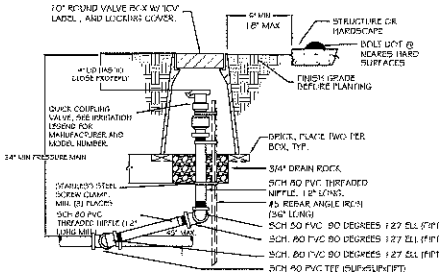

NOTES:
1) INSTALL QUICK COUPLING VALVES IN PLANTING BEDS WHEREVER POSSIBLE.
2) INSTALL VALVE BOX SO THAT TOP OF VALVE BOX IS FLUSH WITH ADJACENT HARDSCAPING.
3) PLACE 3/4" DIA. DRAIN ROCK PRIOR TO INSTALLATION OF VALVE BOX.
4) REFER TO PLAN SHEETS FOR MORE INFORMATION.
5) SIZE OF ASSEMBLY TO BE EQUAL TO THE SIZE OF THE QUICK COUPLER.

5 L13 QUICK COUPLER
NOT TO SCALE

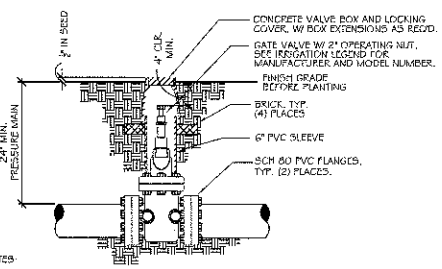

NOTES:
1) INSTALL GATE VALVES A MINIMUM OF 24" FROM STRUCTURES OR HARDSCAPING.
2) INSTALL GATE VALVES IN PLANTING BEDS WHEREVER POSSIBLE.
3) INSTALL VALVE BOX SO THAT TOP OF VALVE BOX IS FLUSH WITH ADJACENT HARDSCAPING.
4) SEE PLAN SHEETS FOR MORE INFORMATION.

6 L13 GATE VALVE
NOT TO SCALE

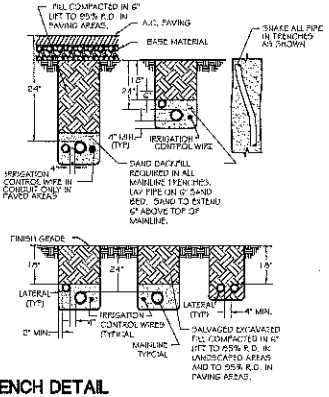

7 L13 TRENCH DETAIL
NOT TO SCALE

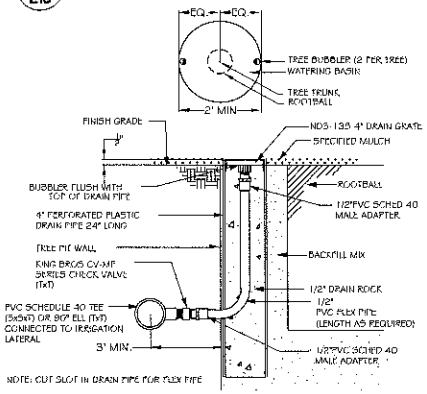

NOTE: CUT SLOT IN DRAIN PIPE FOR FLEX PIPE

8 L13 TREE BUBBLER
NOT TO SCALE

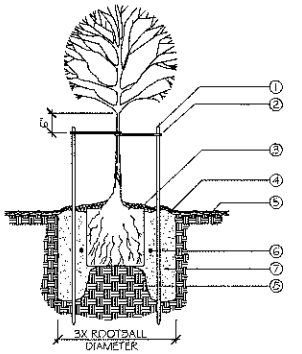

NOTES:
1. TREE STAKES: 2"Ø X 8'-0" LODGEPOLE PINE, 2 PER 15 GAL. EAST/WEST ORIENTATION. CUT STAKES 2" ABOVE HIGHEST RUBBER TIE TIE.
2. RUBBER TREE TIES: 2 PER STAKE. WRAP NO WIRE AROUND TRUNK OR LIMB.
3. MULCH: 3" LAYER IN PLANTING AREA AND 4'-0" TURF FREE CIRCLE IN TURF WITH 3" OF MULCH.
4. 3" HIGH EARTH WATERING BERM IN PLANTER AREA ONLY.
5. FINISH GRADE. KEEP ROOT CROWN 2" ABOVE FINISH GRADE.
6. PLANT TABS. SEE SPECIFICATIONS.
7. PREPARED BACKFILL. SEE SPECIFICATIONS.
8. EXISTING UNDISTURBED SOIL.

9 L13 TREE PLANTING
NOT TO SCALE

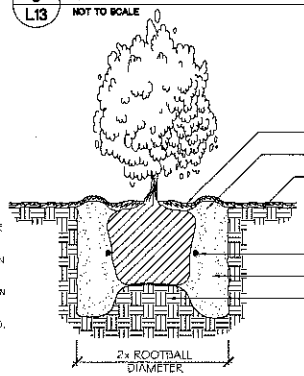

NOTES:
1. 3" LAYER OF APPROVED MULCH.
2. 2" HIGH EARTH MOUND.
3. FINISH GRADE: PLANT ROOT CROWN 1" ABOVE FINISH GRADE.
4. FERTILIZER TABLETS - SEE SPECIFICATIONS.
5. PREPARED BACKFILL. SEE SPECIFICATIONS.
6. PLACE ROOTBALL ON SMALL MOUND OF TAMPED FIRM TOPSOIL.

10 L13 SHRUB PLANTING
NOT TO SCALE

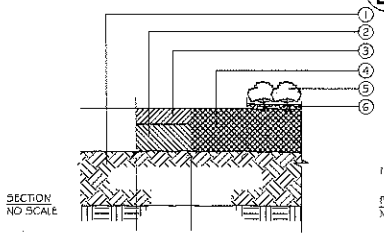

SECTION
NO SCALE

1. RIP OR SCARIFY TOP 12" OF SUBGRADE.
2. ADD 4" OF IMPORTED TOPSOIL. TOPSOIL SHALL BE PHYSICALLY AND CHEMICALLY COMPATIBLE WITH SUBSOIL.
3. ADD AMENDMENTS AND FERTILIZER PER SOILS REPORT.
4. ROTOTILL AMENDMENTS INTO IMPORTED TOPSOIL.
5. PLANT GROUNDCOVER: TRIANGULAR SPACING (SEE PLAN).
6. ADD 3" OF APPROVED MULCH.

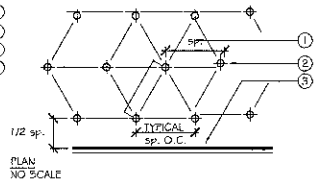

PLAN
NO SCALE

1. GROUNDCOVER SPACING: SEE PLANTING LEGEND.
2. GROUNDCOVER CENTERS.
3. WALL, WALK OR EDGE OF GROUNDCOVER PLANTING.

11 L13 GROUNDCOVER PLANTING
NOT TO SCALE

811 Know what's below. Call before you dig.

CITY OF SACRAMENTO
DEPARTMENT OF PARKS & RECREATION
PARK, PLANNING & DEVELOPMENT SERVICES
LANDSCAPE ARCHITECTURE SECTION
915 I STREET, 3RD FLOOR, SACRAMENTO, CA 95814

DOGWOOD PARK DEVELOPMENT - CONSTRUCTION PLANS (L19185000)

DOGWOOD PARK
CONSTRUCTION DETAILS

LANDSCAPE ARCHITECT
D. DAY
DESIGN BY/DRAWN BY
D. DAY / I. WIESBRAUN
CAD FILE
DATE OCT. 27, 2011
SCALE AS SHOWN
P. N. L19185000
REVISIONS

SHEET NO.
L13 OF 21

CITY OF SACRAMENTO
DEPARTMENT OF PARKS & RECREATION
PARK, PLANNING & DEVELOPMENT SERVICES
LANDSCAPE ARCHITECTURE SECTION
915 I STREET, 3RD FLOOR, SACRAMENTO, CA 95814

DOGWOOD PARK DEVELOPMENT - CONSTRUCTION PLANS (L19185000)

DOGWOOD PARK
SHADE STRUCTURE PLAN

LANDSCAPE ARCHITECT: D. DAY
DESIGN BY/DRAWN BY: D. DAY / J. WIESEMANN
CAD FILE
DATE: OCT. 27, 20
SCALE: AS SHOWN
P. N.: L19185000
REVISIONS

SHEET NO. L14 OF 21

811 Know what's below. Call before you dig.

CRS, INC.

NOTE: STRUCTURE(S) SHALL NOT BE MODIFIED OR ALTERED WITHOUT PRIOR WRITTEN PERMISSION FROM CLASSIC RECREATION SYSTEMS, INC. STRUCTRAL CALCULATIONS FOR THIS STRUCTURE DO NOT ALLOW FOR ANY ADDITIONAL LATERAL LOADS FOR ADDED WALLS OR STRUCTURES CONNECTED TO THIS UNIT.

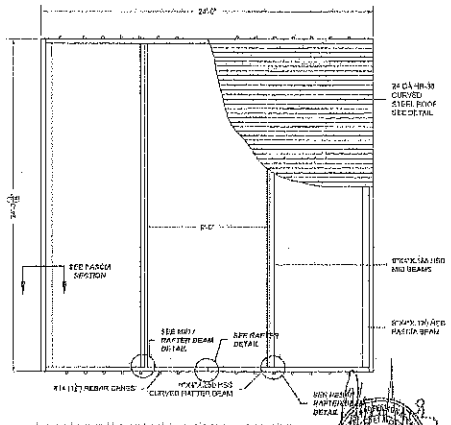

PLAN VIEW 24'X24' OCOTILLO MODEL
NTS

ROSS/ DOGWOOD #13167
3075 MACON DRIVE
SACRAMENTO, CA 95814
Detail Sheet 1 of 9

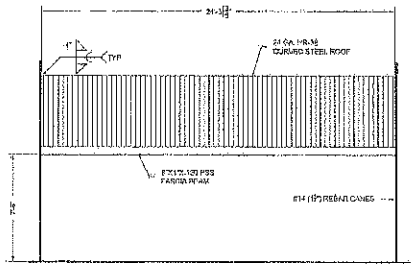

ELEVATION 24'X24' OCOTILLO MODEL
NTS

ROSS/ DOGWOOD #13167
3075 MACON DRIVE
SACRAMENTO, CA 95814
Detail Sheet 2 of 9

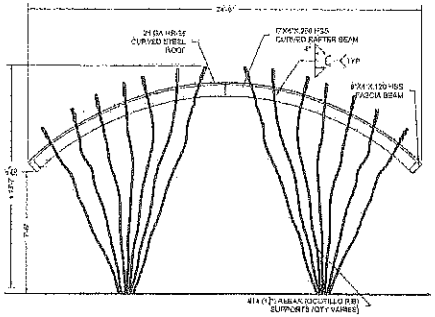

END ELEVATION 24'X24' OCOTILLO MODEL
NTS

ROSS/ DOGWOOD #13167
3075 MACON DRIVE
SACRAMENTO, CA 95814
Detail Sheet 3 of 9

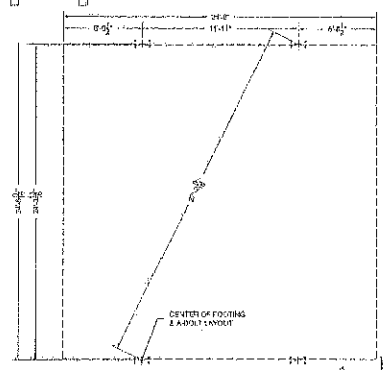

LAYOUT PLAN 24'X24' OCOTILLO MODEL
NTS

ROSS/ DOGWOOD #13167
3075 MACON DRIVE
SACRAMENTO, CA 95814
Detail Sheet 4 of 9

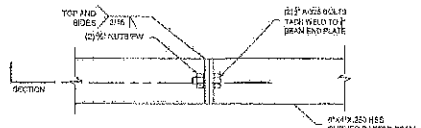

PLAN VIEW RAFTER BEAM
NTS

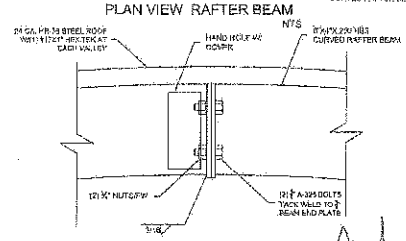

SECTION RAFTER BEAM
NTS

ROSS/ DOGWOOD #13167
3075 MACON DRIVE
SACRAMENTO, CA 95814
Detail Sheet 5 of 9

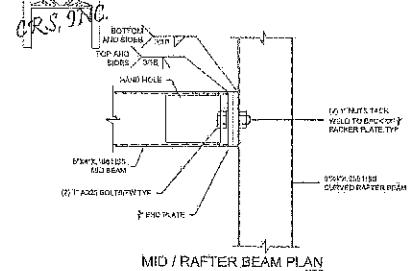

MID / RAFTER BEAM PLAN
NTS

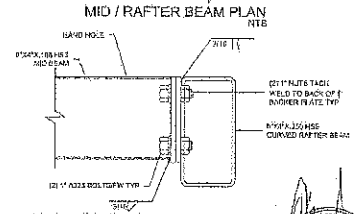

MID / RAFTER BEAM DETAIL
NTS

ROSS/ DOGWOOD #13167
3075 MACON DRIVE
SACRAMENTO, CA 95814
Detail Sheet 6 of 9

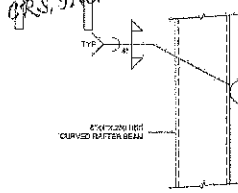

RAFTER BEAM / REBAR PLAN
NTS

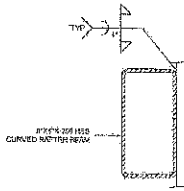

RAFTER BEAM / REBAR DETAIL
NTS

ROSS/ DOGWOOD #13167
3075 MACON DRIVE
SACRAMENTO, CA 95814

Detail Sheet 7 of 9

SEP 09 2013

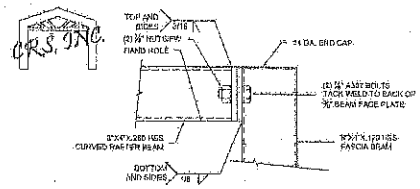

RAFTER / FASCIA BEAM PLAN
NTS

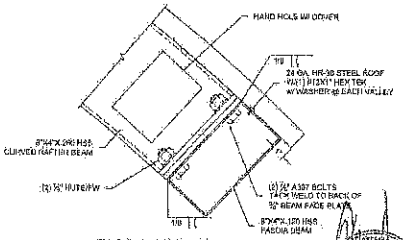

FASCIA SECTION
NTS

ROSS/ DOGWOOD #13167
3075 MACON DRIVE
SACRAMENTO, CA 95814

Detail Sheet 8 of 9

SEP 09 2013

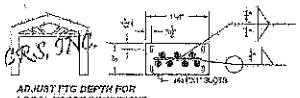

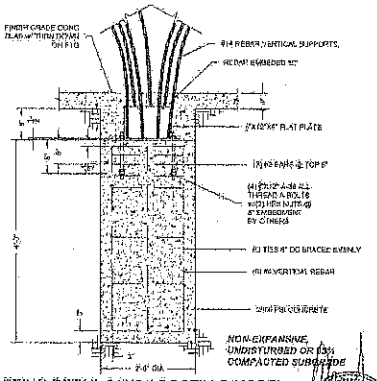

FOOTING DETAIL 24'X24' OCOTILLO MODEL
SUB-SURFACE MOUNT NTS

ROSS/ DOGWOOD #13167
3075 MACON DRIVE
SACRAMENTO, CA 95814

Detail Sheet 9 of 9

SEP 09 2013

811
Know what's below.
Call before you dig.

CITY OF SACRAMENTO
DEPARTMENT OF PARKS & RECREATION
PARK, PLANNING & DEVELOPMENT SERVICES
LANDSCAPE ARCHITECTURE SECTION
915 I STREET, 3RD FLOOR, SACRAMENTO, CA 95814

DOGWOOD PARK DEVELOPMENT - CONSTRUCTION PLANS (L19185000)

DOGWOOD PARK
SHADE STRUCTURE PLAN

LANDSCAPE ARCHITECT
D. DAY
DESIGN BY/DRAWN BY
D. DAY/J. WIESEMANN
CAD FILE
DATE OCT. 27, 2011
SCALE AS SHOWN
P. N. L19185000
REVISIONS

SHEET NO.
L15 OF 21

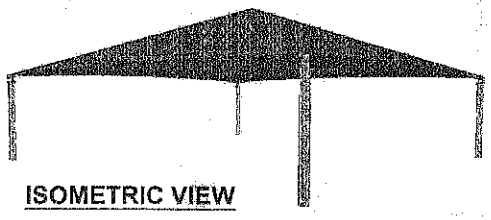

ISOMETRIC VIEW

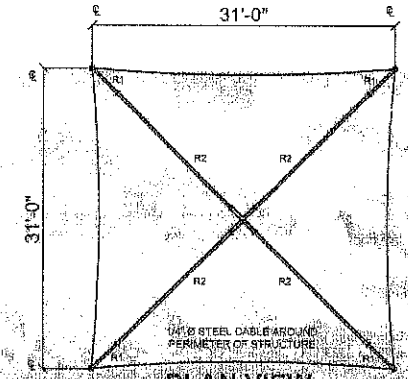

PLAN VIEW

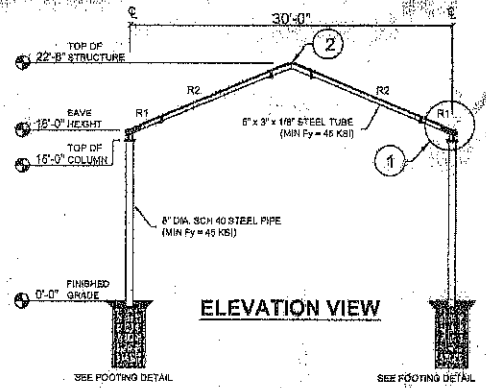

ELEVATION VIEW

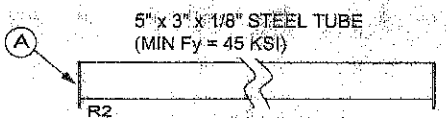

RAFTER BEAM

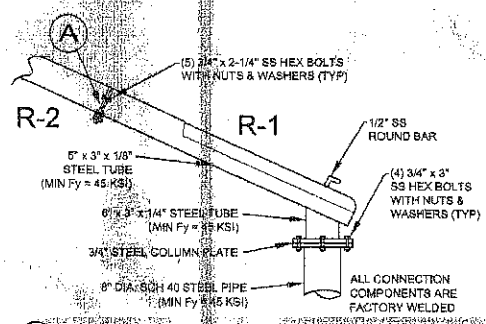

1 BEAM-TO-COLUMN CONNECTION DETAIL

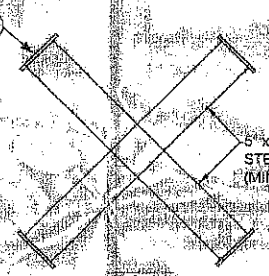

2 CENTER CONNECTOR

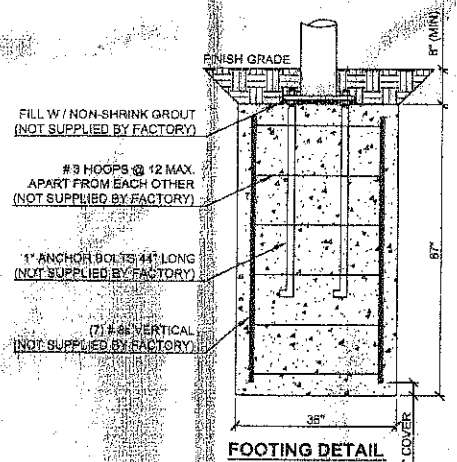

FOOTING DETAIL

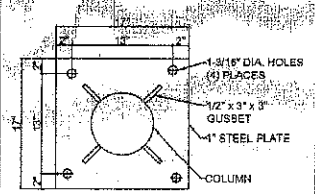

BASE PLATE DETAIL

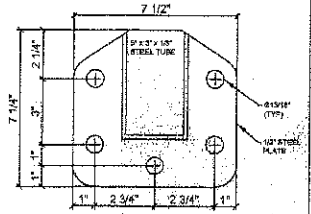

A BEAM-TO-CENTER CONNECTOR DETAIL

GENERAL NOTES

1-THE SHADE SYSTEMS, INC.® STRUCTURE HAS BEEN DESIGNED IN ACCORDANCE WITH THE MOST RECENT CALIFORNIA STATE BUILDING CODES AND NDS 1 TO THE FOLLOWING DESIGN CRITERIA:

	STRUCTURE WITH FABRIC CANOPY INSTALLED
-CATEGORY	I
-EXPOSURE	C
-IMPORTANCE FACTOR	0.87
-BASIC WIND SPEED	100 MPH
-DESIGN WIND PRESSURE	35.38 PSF
-DESIGN UPLIFT PRESSURE	24.74 PSF

2-THE FOUNDATION ASSUMES A MINIMUM SOIL BEARING CAPACITY OF 1500 PSF.

3- ALL FASTENERS SHALL BE STAINLESS STEEL.

4-THE FABRIC SYSTEM IS DESIGNED TO RELEASE WHEN WIND SPEED EXCEEDS 90 MPH, WHICH IS THE DESIGN LOAD ON THE STRUCTURE WITH FABRIC.

STEEL:

1-STEEL PIPES SHALL HAVE A MINIMUM YIELD STRENGTH OF 45 KSI. STEEL PLATES SHALL CONFORM TO ASTM A36.

2-ALL PARTS SHALL BE FACTORY-WELDED TO AMERICAN WELDING SOCIETY (AWS) SPECIFICATIONS AND SHALL UTILIZE E70-48 AND HAVE THE HIGHEST STANDARDS OF QUALITY WORKMANSHIP.

3-ALL WELDS SHALL BE FILLET WELDS WITH MAXIMUM PERMISSABLE THROAT THICKNESS OR FULL PENETRATION GROOVE WELDS.

CONCRETE:

1-ALL CONCRETE SHALL BE MIXED AND PLACED IN ACCORDANCE WITH THE LATEST ADDITION OF ACI 301 & ACI 318.

2-CONCRETE SHALL HAVE A MINIMUM 28 DAY COMPRESSIVE STRENGTH OF 3000 PSI. A PREMIXED CONCRETE MIX HAVING A LISTED STRENGTH OF AT LEAST 2500 PSI THAT IS MIXED IN ACCORDANCE WITH THE MANUFACTURER'S RECOMMENDATIONS IS ACCEPTABLE FOR USE.

3-REINFORCING STEEL SHALL HAVE ASTM A-615 GRADE 60 WITH A MINIMUM YIELD STRENGTH (fy) OF 60 KSI.

4-UNLESS OTHERWISE SHOWN, CONCRETE COVER SHALL BE 3" (MIN).

FABRIC:

1-WATER-TIGHT FABRIC HAS A 5/8/16 FACTOR OF SAFE

THE DOCUMENT AND ITS CONTENTS ARE THE PROPERTY OF SHADE SYSTEMS, INC. AND CANNOT BE COPIED OR USED IN WHOLE OR IN PART, OR MADE AVAILABLE WITHOUT WRITTEN PERMISSION FROM SHADE SYSTEMS, INC. REPRODUCTION OF THESE PLANS, EITHER IN WHOLE OR IN PART, INCLUDING ANY FORM OF SUPPLIED AND/OR FABRICATION OF DERIVATIVE WORKS THEREOF, FOR ANY REASON WITHOUT PRIOR WRITTEN PERMISSION FROM SHADE SYSTEMS, INC. IS STRICTLY PROHIBITED.
© 2012 SHADE SYSTEMS INC.

NOTE TO OWNER:
OWNER ACCEPTS FULL RESPONSIBILITY FOR REMOVING THE FABRIC SHADE MATERIAL FROM THE STEEL FRAME WHEN SEVERE WEATHER CONDITIONS ARE PREDICTED. SUCH CONDITIONS INCLUDE PREDICTED WIND SPEEDS IN EXCESS OF 90 MPH. ALSO, AS STRUCTURE IS NOT DESIGNED FOR ANY SNOW LOAD, IT IS RECOMMENDED THAT CANOPY BE REMOVED WHEN SNOWFALL IS EXPECTED.

Shade Systems
4150 S.W. 19 Street
Ocala, FL 34474
Tel.: 1-800-809-6066

Dogwood Park
3075 Macon Drive
Sacramento, CA 95835

Approved:

REGISTERED PROFESSIONAL ENGINEER DAVID W. DAY No. C 046618 Exp. Dec. 31, 2014 CIVIL STATE OF CALIFORNIA

7/24/13

Model: S313116PM

Revisions

REP:
RECREATION REPUBLIC
760-690-4030

Approved:	NB	Job:
Checked:	TT	3963
Drawn:	NB	
Date: 09/04/2013		Sheets: 1 OF 1
NOT TO SCALE		

811 Know what's below. Call before you dig.

CITY OF SACRAMENTO
DEPARTMENT OF PARKS & RECREATION
PARK, PLANNING & DEVELOPMENT SERVICES
LANDSCAPE ARCHITECTURE SECTION
915 I STREET, 3RD FLOOR, SACRAMENTO, CA 95814

DOGWOOD PARK DEVELOPMENT - CONSTRUCTION PLANS (L19185000)

DOGWOOD PARK
SHADE CANOPY PLAN

LANDSCAPE ARCHITECT
D. DAY

DESIGN BY/DRAWN BY
D. DAY / J. WIESEMANN

CAD FILE

DATE OCT. 27, 20

SCALE AS SHOWN

P. N. L19185000

REVISIONS

SHEET NO.
L16 OF 21

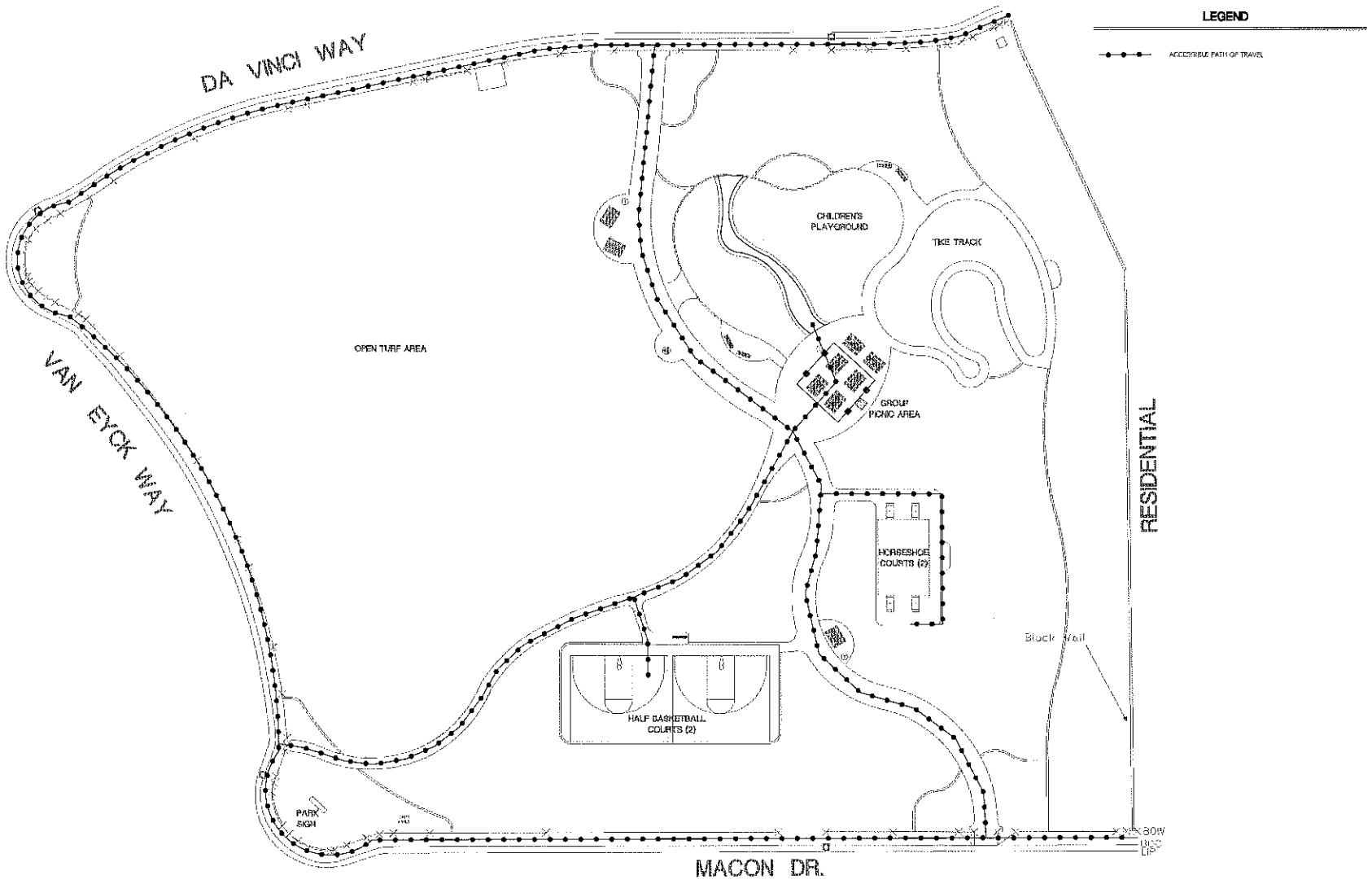

811 Know what's below. Call before you dig.

CITY OF SACRAMENTO
DEPARTMENT OF PARKS & RECREATION
PARK, PLANNING & DEVELOPMENT SERVICES
LANDSCAPE ARCHITECTURE SECTION
915 I STREET, 3RD FLOOR, SACRAMENTO, CA 95814

DOGWOOD PARK
PATH OF TRAVEL PLAN

LANDSCAPE ARCHITECT D. DAY
DESIGN BY/DRAWN BY D. DAY/J. WIESEMANN
CAD FILE
DATE OCT. 27, 20
SCALE AS SHOWN
P. N. L19185000
REVISIONS

SHEET NO. L17 OF 21

DOGWOOD PARK DEVELOPMENT - CONSTRUCTION PLANS (L19185000)

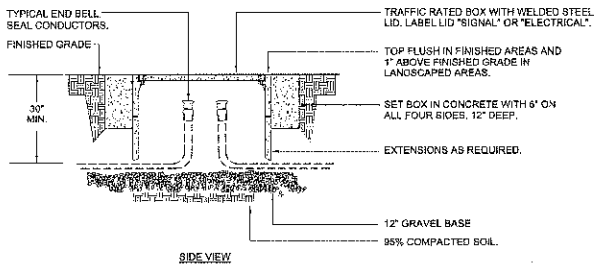

1 PULL BOX DETAIL

NO SCALE

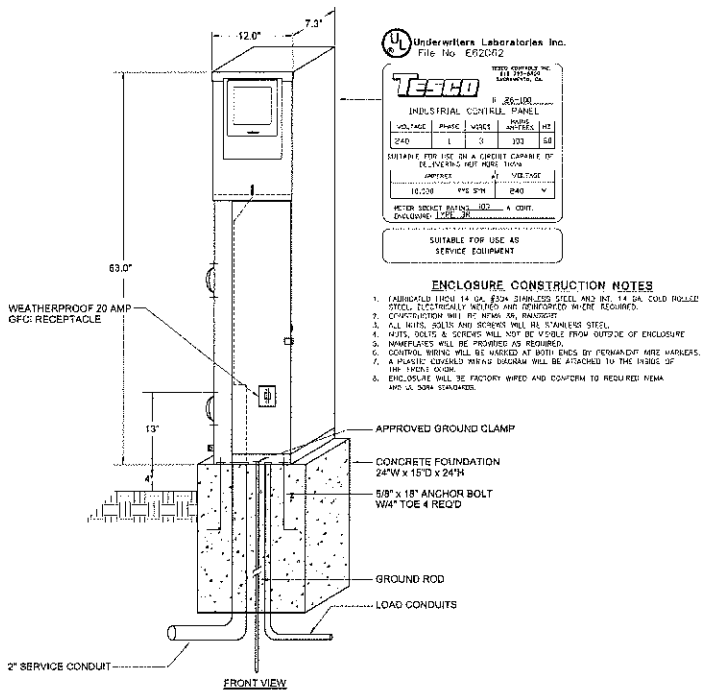

ENCLOSURE CONSTRUCTION NOTES

1. FABRICATED FROM 14 GA. #304 STAINLESS STEEL AND INT. 14 GA. COLD ROLLED STEEL, ELECTRICALLY WELDED AND REINFORCED WHERE REQUIRED.
2. CONSTRUCTION WILL BE NEMA 4X, RAINTIGHT.
3. ALL NUTS, BOLTS AND SCREWS WILL BE STAINLESS STEEL.
4. NUTS, BOLTS & SCREWS WILL NOT BE VISIBLE FROM OUTSIDE OF ENCLOSURE
5. NAMEPLATES WILL BE PROVIDED AS REQUIRED.
6. CONTROL WIRING WILL BE MARKED AT BOTH ENDS BY PERMANENT WIRE MARKERS.
7. A PLASTIC COVERED WIRING DIAGRAM WILL BE ATTACHED TO THE INSIDE OF THE DOOR.
8. ENCLOSURE WILL BE FACTORY WIRED AND CONFORM TO REQUIRED NEMA AND UL 508A STANDARDS.

2 SERVICE PEDESTAL ELEVATION

NO SCALE

GENERAL NOTES

THE CONTRACTOR SHALL VISIT JOB SITE AND VERIFY CONDITIONS BEFORE BIDDING.

COORDINATE SEQUENCE OF WORK WITH OWNER. MAKE ALL NECESSARY CONNECTIONS AS REQUIRED TO MAINTAIN POWER DURING THE STAGES OF WORK.

EXISTING DEVICES SHOWN WERE TAKEN FROM EXISTING DRAWINGS (NOT "AS BUILT" DRAWINGS) AND LIMITED SITE SURVEYS AND MAY NOT BE EXACTLY AS SHOWN. CONTRACTOR SHALL VISIT JOB SITE AND VERIFY CONDITIONS PRIOR TO BIDDING.

REFER TO THOSE DRAWINGS SHOWING OTHER WORK, AND COORDINATE PLACEMENT OF WORK WITH THAT OF OTHER TRADES. REPORT ANY CONFLICT TO ARCHITECT PRIOR TO INSTALLING WORK. ADJUST WORK AS DIRECTED BY ARCHITECT.

ALL EQUIPMENT INSTALLED OR CONNECTED BY THE CONTRACTOR SHALL BE LABELED OR CERTIFIED FOR ITS USE BY A NATIONALLY RECOGNIZED TESTING LABORATORY.

UNLESS OTHERWISE INDICATED, ALL 20 AMP 120 VOLT BRANCH CIRCUITS SHALL HAVE DEDICATED NEUTRALS. DO NOT SHARE NEUTRALS.

SERVICE NOTES

THE CONTRACTOR SHALL INCLUDE IN HIS WORK THE POWER AND TELEPHONE SERVICES. ALL WORK PERFORMED BY THE CONTRACTOR SHALL BE IN ACCORDANCE WITH THE UTILITY CO. REQUIREMENTS AND THESE PLANS AND SPECIFICATIONS. CONTACT UTILITY COMPANIES AND OBTAIN THEIR REQUIRMENTS REGARDING DETAILS OF SERVICES AND ASSOCIATED WORK. WHEREVER THESE PLANS AND SPECIFICATIONS REQUIRE MATERIALS OR METHODS OF HIGHER QUALITY THAN THAT INDICATED BY THE UTILITY CO. THESE PLANS AND SPECIFICATIONS SHALL COVER. REPORT ANY CONFLICT ANY CONFLICT IN REQUIREMENTS TO THE ARCHITECT BEFORE INSTALLING WORK.

POWER CO:	SMUD
CONTACT:	CUSTOMER SERVICE (877) 622-7683
TELEPHONE CO:	AT&T
CONTACT:	PENDING INFORMATION FROM UTILITY COMPANY

STANDARD ELECTRICAL SYMBOLS

SYMBOL	DESCRIPTION
	SURFACE MOUNTED LUMINAIRE.
	AUTOMATIC "ON" SINGLE LEVEL, DUAL TECHNOLOGY OCCUPANCY SENSOR. WATTSTOPPER #EW-200-120-G.
VFD	VARIABLE FREQUENCY DRIVE WITH INTERNAL 80 AMP CIRCUIT BREAKER TYPE DISCONNECT SWITCH. FURNISHED BY OTHERS. CONNECT AS REQUIRED.
	CONTROL AND/OR EQUIPMENT, N.I.E.S., INSTALL AND CONNECT AS REQUIRED.
	MOTOR, N.I.E.S., CONNECT AS REQUIRED.
	JUNCTION BOX, SIZE AND TYPE AS INDICATED OR REQUIRED.
	20 AMP 125V 3W DUPLEX CONVENIENCE RECEPTACLE, MOUNTED +18" ABOVE FINISHED FLOOR TO CENTER OF BOX WITH GROUND FAULT INTERRUPTER.
MT	EMPTY CONDUIT WITH PULL-LINE.
WP	WEATHERPROOF, DAMP OR WET LOCATION AS REQUIRED.
"G"	GREEN INSULATED GROUND WIRE, #12 AWG UNLESS NOTED.
N.I.E.S.	NOT IN ELECTRICAL SECTION OF THESE PLANS AND SPEC'S.
	NUMBERED NOTE.
	RACEWAY INSTALLED IN CEILING OR WALL. ROUTE EXPOSED IN ALL UNFINISHED AREAS.
	RACEWAY INSTALLED BELOW FINISHED FLOOR OR GRADE.
	ARROW AT END OF RACEWAY INDICATES HOME RUN TO RESPECTIVE PANELBOARD OR SWITCHBOARD.
	BRANCH CIRCUIT WITHOUT FURTHER DESIGNATION INDICATES A 2 #12 AWG CIRCUIT WITH 1 #12 AWG GROUND.
	STRAIGHT CROSS-LINES IN BRANCH CIRCUIT RACEWAY INDICATE NUMBER OF #12 AWG WIRES IN A CIRCUIT. SHORT LINES INDICATE UNGROUNDED CONDUCTORS. LONG LINES INDICATE NEUTRAL CONDUCTORS. WIRES SHOWN ARE IN ADDITION TO 1 #12 AWG GROUNDING CONDUCTOR.
#18	BRANCH CIRCUIT WITH GROUNDING WIRE LARGER THAN #12 AWG. NUMBER ADJACENT TO CURVED CROSS-LINE INDICATES WIRE SIZE.
#18	BRANCH CIRCUIT RACEWAY WITH WIRE OTHER THAN #12 AWG. NUMBER ADJACENT TO STRAIGHT OR CURVED CROSS-LINES INDICATES WIRE SIZE. UNGROUNDED AND NEUTRAL CONDUCTORS SHALL BE THE SAME SIZE UNLESS OTHERWISE NOTED.

LUMINAIRE SCHEDULE

TAG	MANUFACTURER & CATALOG NUMBER	DESCRIPTION	MTG.	LAMP TYPE	LAMP No.	VOLTS	WATTS	REMARKS
A	COOPER LIGHTING T-R-R-15-C-LD2-40-8-35-BK-UNV-ED-SP-VRSD	15" ROUND HARMONY TERRAPIN LED VANDAL RESISTANT	SURFACE	LED	1	120	40	SURFACE CONDUIT CONNECTION

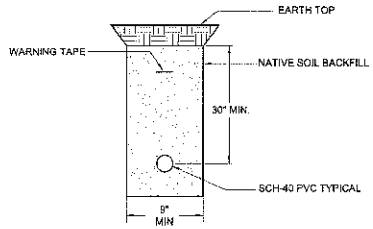

NOTE: PROVIDE A WARNING TAPE IN TRENCH AT LEAST 12" ABOVE UNDERGROUND INSTALLATION.

3 UNDERGROUND CONDUIT TRENCH DETAIL

NO SCALE

SHEET INDEX

SHEET	DESCRIPTION
E1	SYMBOLS LIST, NOTES, AND DETAILS
E2	EXTERIOR TITLE 24
E3	SITE PLAN - ELECTRICAL
E4	ONE-LINE AND WIRING DIAGRAMS

ECOM ENGINEERING INC.
1786 TRIBUTE ROAD, SUITE 100
SACRAMENTO, CA. 95815
916.641.8600
916.641.1640 FAX
WWW.ECOMENG.COM
JOB NO. 13H254.00 DWG NSS
DESIGN BY JE
DWN BY ECOM

Know what's below. Call before you dig.

CITY OF SACRAMENTO
DEPARTMENT OF PARKS & RECREATION
PARK, PLANNING & DEVELOPMENT SERVICES
LANDSCAPE ARCHITECTURE SECTION
915 I STREET, FLOOR 5, SACRAMENTO, CA 95814

DOGWOOD PARK
SYMBOLS LIST, NOTES AND DETAILS

LANDSCAPE ARCHITECT D.DAY
DESIGN BY/DRAWN BY D.DAY/J. WIESEMANN
CAD FILE
DATE
SCALE AS SHOWN
P. N. L19165000
REVISIONS

SHEET NO. E1 OF 21

Certificate of Compliance (Page 1 of 4) OLTG-1C

Project Name: CITY OF SACRAMENTO – DOG WOOD PARK	Date: 10/08/2013
Project Address: DA VINCI WAY, SACRAMENTO CA, 95835	Total Hardscape Illuminated Area: 578

General Information

Phase of Construction: X New Construction [ ] Addition [ ] Alteration

Documentation Author's Declaration Statement

- I certify that this Certificate of Compliance documentation is accurate and complete.

Name: BEN SCHLENKER	Signature: (signed)
Company: ECOM ENGINEERING	Date: 10/08/13
Address: 1798 TRIBUTE ROAD, SUITE 100	If Applicable: CEA # / CEPE #
City/State/Zip: SACRAMENTO / CA / 95815	Phone: (916) 641-5600

Principal Lighting Designer's Declaration Statement

- I am eligible under Division 3 of the California Business and Professions Code to accept responsibility for the lighting design.
- This Certificate of Compliance identifies the lighting features and performance specifications required for compliance with Title 24, Parts 1 and 6 of the California Code of Regulations.
- The design features represented on this Certificate of Compliance are consistent with the information provided to document this design on the other applicable forms, worksheets, calculations, plans and specifications submitted to the enforcement agency for approval with this building permit application.

Name: ERIC C. JOHNSON	Signature: (signed)
Company: ECOM ENGINEERING	Phone: (916) 641-5600
Address: 1798 TRIBUTE ROAD, SUITE 100	License #: E 017376
City/State/Zip: SACRAMENTO / CA / 95815	Date: 10/08/2013

Principal Lighting Designer's Declaration

X I certify that this certificate of Compliance documentation is accurate and complete, and accounts for all outdoor lighting power, including building mounted, pole mounted, as well as all other outdoor lighting designed for the site, and the Additional Lighting Power Allowances for Specific Applications or Additional Lighting Power Allowances for Ordinance Requirements have not been counted more than one time for the same area, in accordance with Section 147 of the Standards.

Outdoor Lighting Mandatory Measures
Indicate location on building plans of Mandatory Measures Note Block: E2

LIGHTING COMPLIANCE FORMS & WORKSHEETS (check box if worksheet is included)

For detailed instructions on the use of this and all Energy Efficiency Standards compliance forms, please refer to the Nonresidential manual published by the California Energy Commission.

X	OLTG-1C	Certificate of Compliance. All 4 pages required on plans for all submittals.
[ ]	OLTG-2C	Page (1 of 3) Lighting Wattage Allowance for General Hardscape, Sales Frontage, or Ornamental Lighting. Optional on plans.
[ ]	OLTG-2C	Page (2 of 3) Lighting Wattage Allowance Per Application or Per Area. Optional on plans.
[ ]	OLTG-2C	(Page 3 of 3) Additional Lighting Power Allowance for Ordinance Requirements. Optional on plans.

2008 Nonresidential Compliance Forms — July 2010

Certificate of Compliance (Page 2 of 4) OLTG-1C

COMPLIANCE FIXTURE / LIGHTING CONTROL SCHEDULE and FIELD INSPECTION CHECKLIST

Project Name: CITY OF SACRAMENTO – DOG WOOD PARK — Date: 10/08/2013

INSTALLATION CERTIFICATE, OLTG-1-INST (Retain a copy and verify form is completed and signed) — Field Inspection [ ]

CERTIFICATE OF ACCEPTANCE, OLTG-2A (Retain a copy and verify form is completed and signed) — Field Inspection [ ]

Luminaire Schedule

A: Name or Item Tag	B: Luminaire Description[1] See footnote below (i.e. 1 lamp pole-top shoe-box 400 watt metal halide)	C: Cutoff Designation	D: Watts per Luminaire	E: Special Features	F: How wattage was determined — Default from NA-8	F: According to §130 (d) or (e)	G: Number of Luminaires	H: Installed Watts (D x G)	I: Field Inspector[2] Pass	Fail
A	LED 15" ROUND VANDAL RESISTANT		40	[ ]	X	[ ]	1	40	[ ]	[ ]
				[ ]	[ ]	[ ]			[ ]	[ ]
				[ ]	[ ]	[ ]			[ ]	[ ]
				[ ]	[ ]	[ ]			[ ]	[ ]
				[ ]	[ ]	[ ]			[ ]	[ ]
				[ ]	[ ]	[ ]			[ ]	[ ]
				[ ]	[ ]	[ ]			[ ]	[ ]
Enter total into OLTG-1C; Page 4 of 4; Row H; Total Installed Watts:								40		

1. Type of luminaire (i.e.: post top, wall pack, surface, shoebox); for non-incandescent luminaires, indicate nominal lamp wattage and lamp type (i.e.: fluorescent, incandescent, HID); ballast type (i.e.: electronic or magnetic); number of lamps and number of ballasts per luminaire. For incandescent luminaires, the luminaire wattage listed in column D shall be the maximum relamping rated wattage on a permanent factory-installed label on the luminaire, NOT the wattage of the lamp (bulb) used, in accordance with Section 130 (d or e).
2. If Fail then describe on Page 2 of the Inspection Checklist Form and take appropriate action to correct. Verify building plans if necessary.

EXEMPT LUMINAIRES — Field Inspection

Name or Symbol	Description of Exempt luminaires in accordance with §147

MANDATORY CONTROLS — Field Inspection

#	Description	Location	#	Description	Location
1	PHOTOCELL/ OCC. SENSOR	UNDER CANOPY			

SPECIAL FEATURES INSPECTION CHECKLIST (See Page 2 of 4 of OLTG-1C)

The local enforcement agency should pay special attention to the items specified in this checklist. These items require special written justification and documentation, and special verification. The local enforcement agency determine the adequacy of the justification, and may reject a building or design that otherwise complies based on the adequacy of the special justification and documentation submitted.

Field Inspector Notes or Discrepancies:

2008 Nonresidential Compliance Forms — July 2010

Certificate of Compliance (Page 3 of 4) OLTG-1C

Project Name: CITY OF SACRAMENTO – DOG WOOD PARK — Date: 10/08/2013

A. OUTDOOR LIGHTING ZONE

OUTDOOR LIGHTING ZONE: [ ] OLZ 1 [ ] OLZ 2 X OLZ 3 [ ] OLZ 4

Is the Outdoor Lighting Zone: X Default in accordance with § 10-114, or [ ] Amended by JHA

Complete the information below if the default Outdoor Lighting Zone has been amended by the local jurisdiction having authority (JHA):

[ ] The site is a government designated park, recreation area, wildlife preserve, or portion thereof, and has been designated as LZ2 or LZ3, in accordance with Table 10-114-A, because the site is contained within such zone.

[ ] The local jurisdiction having authority has officially adopted a change to the State Default Lighting Zone and has notified the Energy Commission by providing the materials required in § 10-114(d) to the Executive Director.

[ ] The adopted change is posted on the Energy Commission website.

B. ADDITIONAL LIGHTING POWER ALLOWANCE FOR ORDINANCE REQUIREMENTS

Are additional lighting power allowances for ordinance in Table 147-C used? [ ] Yes X No

Complete the information below if additional lighting power allowances for ordinance requirements are used:

[ ] The local jurisdiction having authority has officially adopted specific outdoor light levels, which are expressed as average or minimum footcandle levels, by following a public process that allowed for formal public notification, review, and comment about the proposed change.

[ ] The local jurisdiction having authority which adopted specific outdoor light levels, and has notified the Commission by providing the following materials required §10-114(f) to the Executive Director.

C. ACCEPTANCE FORMS

Required Acceptance Tests

Designer:

This form is to be used by the designer and attached to the plans. Listed below is the acceptance tests for the Lighting system OLTG-2A. The designer is required to check the acceptance tests and list all control devices serving the building or space shall be certified as meeting the Acceptance Requirements for Code Compliance. If all the lighting system or control of a certain type requires a test, list the different lighting and the number of systems. The NA7 Section in the Appendix of the Nonresidential Reference Appendices Manual describes the test. Since this form will be part of the plans, completion of this section will allow the responsible party to budget for the scope of work appropriately. Forms can be grouped by type of Luminaire controlled.

Enforcement Agency:

Systems Acceptance. Before Occupancy Permit is granted for a newly constructed building or space or when ever new lighting system with controls is installed in the building or space shall be certified as meeting the Acceptance Requirements. The OLTG-2A form is not considered a complete form and is not to be accepted by the enforcement agency unless the boxes are checked and/or filled and signed. In addition, a Certificate of Acceptance forms shall be submitted to the enforcement agency that certifies plans, specifications, installation certificates, and operating and maintenance information meet the requirements of §10-103(b) of Title 24 Part 6. The field inspector must receive the properly filled out and signed forms before the building can receive final occupancy. A copy of the OLTG-2A for each different lighting luminaire control(s) must be provided to the owner of the building for their records.

Equipment Requiring Testing	Luminaires Controlled: Description	Number of Like Controls	Location	Certificate of Acceptance OLTG-2A[1]: Outdoor Lighting Acceptance Tests
I-OS	PHOTOCELL/OCC SENSOR	1	UNDER CANOPY	

1. Insert: OMS for Outdoor Motion Sensor; OLSO for Outdoor Lighting Shutoff Controls; OP for Outdoor Photocell; ATS for Astronomical Time Switch; and STS for Standard (non-astronomical) Time Switch acceptance.

2008 Nonresidential Compliance Forms — July 2010

Certificate of Compliance (Page 4 of 4) OLTG-1C

Project Name: CITY OF SACRAMENTO – DOG WOOD PARK — Date: 10/08/2013

ALLOWED AND INSTALLED OUTDOOR LIGHTING POWER

		Lighting Wattage Power Allowance
A	Lighting power allowance for general hardscape (from OLTG-2C Page 1 of 3)	911.3
B	Specific application lighting wattage allowance per unit length (from OLTG-2C Page 1 of 3)	
C	Specific application wattage allowance for ornamental lighting (from OLTG-2C Page 1 of 3)	
D	Specific application wattage allowance per application (from OLTG-2C Page 2 of 3)	
E	Specific application lighting wattage allowance per area (from OLTG-2C Page 2 of 3)	
F	Additional lighting power allowance for ordinance requirements (from OLTG-2C Page 3 of 3)	
G	Total Allowed Wattage = Sum of rows A through F:	911.3
H	Total Installed watts (from Luminaire Schedule, (from OLTG-1C Page 2 of 4)	40

Provided that the lighting wattage power allowances listed in row A through F are identical to the lighting wattage power allowances from OLTG-2C Pages 1 through 3, complies if Installed Wattage in row H is less than or equal to the Total Installed Wattage in row G. — X Yes [ ] No

2008 Nonresidential Compliance Forms — July 2010

OUTDOOR LIGHTING WORKSHEET (Page 1 of 3) OLTG-2C

Project Name: CITY OF SACRAMENTO – DOG WOOD PARK — Date: 10/08/2013

A. LIGHTING POWER ALLOWANCE FOR GENERAL HARDSCAPE

A: Illuminated Hardscape Area	B: AWA per Square Foot	C: AWA (A x B)	D: Perimeter Length of General Hardscape	E: LWA per Linear Foot	F: LWA (D x E)	G: IWA (Watts)	K: C + F + G
578	0.092	53	95	0.92	88.3	770	911.3

Area Wattage Allowance (AWA): columns A–C; Linear Wattage Allowance (LWA): columns D–F; Initial Wattage Allowance: column G; Total General Hardscape Lighting Allowance: column K.

Enter total into OLTG-1C; Page 4 of 4; Row A; Lighting Power Allowance for General Hardscape: 911.3

X Yes AWA, LWA, and IWA from Table 147-A was used as appropriate for the Outdoor Lighting Zone.

B. SPECIFIC APPLICATION LIGHTING WATTAGE ALLOWANCE PER UNIT LENGTH (Available only for sales frontage)

A: Specific Lighting Application	B: Linear Feet of Frontage	C: Sales Frontage allowance for OLZ (watts per lf)	D: Wattage Allowance (B x C)	E: Name or Symbol	F: Luminaire Type	G: Luminaire Quantity	H: Watts per Luminaire	I: Design Watts (G x H)	J: Allowed Watts Minimum of D or I

Determine Wattage Allowance: A–D; Luminaire Type: E–F; Design Watts: G–I.

Enter total into OLTG-1C; Page 4 of 4; Row B; Specific Application Lighting Wattage Allowance Per Unit Length:

C. SPECIFIC APPLICATION WATTAGE ALLOWANCE FOR ORNAMENTAL LIGHTING

A: Specific Lighting Application	B: Square feet of Hardscape	C: Ornamental Lighting Allowance for OLZ (watts per sq. ft.)	D: Wattage Allowance (B x C)	E: Name or Symbol	F: Luminaire Type	G: Luminaire Quantity	H: Watts per Luminaire	I: Design Watts (G x H)	J: Allowed Watts Minimum of D or I

Enter total into OLTG-1C; Page 4 of 4; Row C; Specific Application Lighting Wattage Allowance For Ornamental Lighting:

2008 Nonresidential Compliance Forms — March 2010

OUTDOOR LIGHTING MANDATORY MEASURES

1. DETERMINING INSTALLED LIGHTING POWER

[X] INSTALLED LIGHTING POWER HAS BEEN DETERMINED IN ACCORDANCE WITH SECTION 130 (d) 1.

2. CONTROLS FOR INEFFICIENT LIGHTING SYSTEMS

PER SECTION 132 (a): ALL PERMANENTLY INSTALLED OUTDOOR LUMINAIRES WITH LAMPS RATED OVER 100 WATTS MUST EITHER:

N/A HAVE A LAMP EFFICACY OF AT LEAST 60 LUMENS PER WATT; OR

N/A BE CONTROLLED BY A MOTION SENSOR; OR

N/A BE EXEMPTED FROM THE (8) POSSIBLE EXCEPTIONS PER SECTION 132 (a).

3. LUMINAIRE CUTOFF REQUIREMENTS

N/A ALL OUTDOOR LUMINAIRES THAT USE LAMPS RATED GREATER THAN 175 WATTS IN HARDSCAPE AREAS INCLUDING PARKING LOTS, BUILDING ENTRANCES, SALES AND NON-SALES CANOPIES, AND ALL OUTDOOR SALES AREAS SHALL BE DESIGNATED CUTOFF FOR LIGHT DISTRIBUTION. TO COMPLY WITH THIS REQUIREMENT, THE LUMINAIRE SHALL BE RATED CUTOFF IN A PHOTOMETRIC TEST REPORT THAT INCLUDES ANY TILT OR OTHER NON-LEVEL MOUNTING CONDITION OF THE INSTALLED LUMINAIRE. CUTOFF IS A LUMINAIRE LIGHT DISTRIBUTION CLASSIFICATION WHERE THE CANDELA PER 1000 LAMP LUMENS DOES NOT NUMERICALLY EXCEED 25 AT OR ABOVE A VERTICAL ANGLE OF 90 DEGREES ABOVE NADIR, AND 100 AT OR ABOVE A VERTICAL ANGLE OF 80 DEGREES ABOVE NADIR. NADIR IS IN THE DIRECTION OF STRAIGHT DOWN, AS WOULD BE INDICATED BY A PLUMB LINE. 90 DEGREES ABOVE NADIR IS HORIZONTAL. 80 DEGREES ABOVE NADIR IS 10 DEGREES BELOW HORIZONTAL; OR

N/A BE EXEMPTED FROM THE (6) POSSIBLE EXCEPTIONS PER SECTION 132 (b).

4. AUTOMATIC SHUT-OFF CONTROLS

[X] ALL PERMANENTLY INSTALLED OUTDOOR LIGHTING SHALL BE CONTROLLED BY A PHOTOCONTROL OR ASTRONOMICAL TIME SWITCH THAT AUTOMATICALLY TURNS OFF THE OUTDOOR LIGHTING WHEN DAYLIGHT IS AVAILABLE; OR

N/A BE EXEMPTED FROM THE EXCEPTION PER SECTION 132 (c) 1.

5. MULTI-LEVEL SWITCHING

[X] THIS CONTROL SHALL MEET THE REQUIREMENTS OF SECTION 119 (c).

N/A FOR LIGHTING OF BUILDING FACADES, PARKING LOTS, SALES AND NON-SALES CANOPIES, ALL OUTDOOR SALES AREAS, AND STUDENT PICK-UP/DROP-OFF ZONES WHERE TWO OR MORE LUMINAIRES ARE USED, AN AUTOMATIC TIME SWITCH SHALL BE INSTALLED THAT IS CAPABLE OF:

- N/A TURNING OFF THE LIGHTING WHEN NOT NEEDED; AND
- N/A REDUCING THE LIGHTING POWER (IN WATTS) BY AT LEAST 50 PERCENT BUT NOT EXCEEDING 80 PERCENT; OR
- N/A PROVIDING CONTINUOUS DIMMING THROUGH A RANGE THAT INCLUDES 50 PERCENT THROUGH 80 PERCENT REDUCTION.

N/A BE EXEMPTED FROM THE (5) POSSIBLE EXCEPTIONS PER SECTION 132 (c) 2.

ECOM ENGINEERING INC.
1798 TRIBUTE ROAD, SUITE 100
SACRAMENTO, CA. 95815
916.641.5600
916.641.1640 FAX
WWW.ECOMENG.COM

JOB NO. 13H254.00 — DESIGNED JF — DRAWN BY ECOM

Know what's below. Call before you dig.

CITY OF SACRAMENTO
DEPARTMENT OF PARKS & RECREATION
PARK, PLANNING & DEVELOPMENT SERVICES
LANDSCAPE ARCHITECTURE SECTION
915 I STREET, FLOOR 5, SACRAMENTO, CA 95814

DOGWOOD PARK
EXTERIOR TITLE 24

LANDSCAPE ARCHITECT: D.DAY
DESIGN BY/DRAWN BY: D.DAY/J. WIESEMANN
CAD FILE:
DATE:
SCALE: AS SHOWN
P. N.: L19165000
REVISIONS

SHEET NO. E2 OF 21

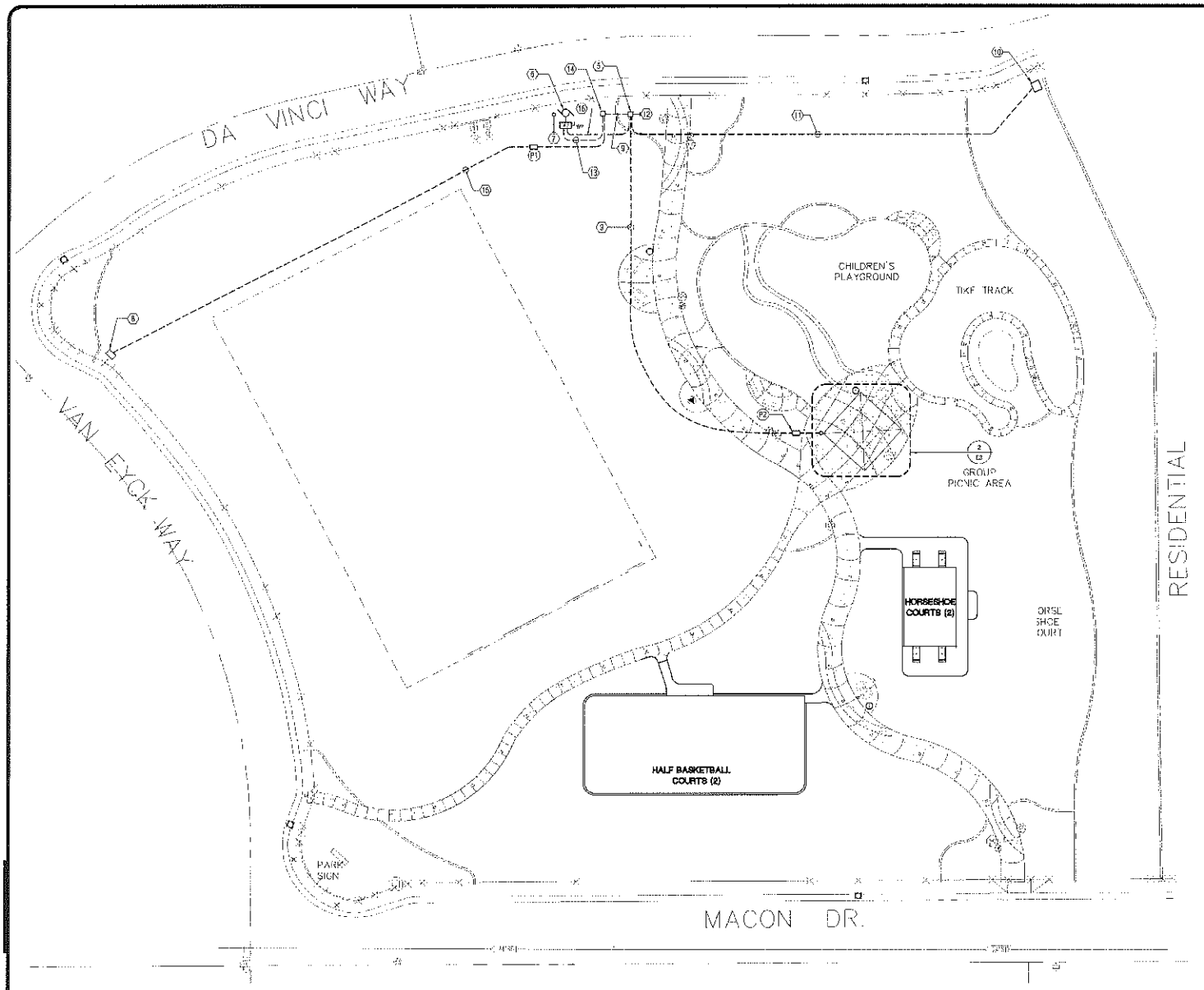

1 SITE PLAN - ELECTRICAL
SCALE: 1"=20'-0"

NUMBERED NOTES

1. NEW FAIL SAFE LIGHTING FIXTURE, MOUNT MOUNT UNDER SHADE STRUCTURE.
2. MOUNT NEW OUTDOOR MOTION SENSOR AT THE TOP OF THE SHADE STRUCTURE.
3. PAINT EXPOSED CONDUIT TO MATCH FINISH. COORDINATE WITH ARCHITECT.
4. CONCEAL 1/2" RIGID STEEL CONDUIT IN SHADE STRUCTURE COLUMN.
5. METERED PEDESTAL BY TESCO. REFER TO DETAIL 2 ON SHEET E3.
6. NEW 7 1/2 HORSEPOWER 230V, 3PH, PUMP MOTOR. MOTOR CONNECTED TO VARIABLE FREQUENCY DRIVE WITH 230V, 1PH INPUT. VFD FURNISHED WITH INTERNAL 80/2 AMP INPUT BREAKER.
7. STUB 1-2" EMPTY CONDUIT 5' BEYOND CONCRETE PAD.
8. EXISTING "SUREWEST" PULL BOX.
9. 1 - 1" CONDUIT WITH 2 #10 & 1 #10 'G'.
10. EXISTING SMUD PAD MOUNTED TRANSFORMER.
11. 1 - 2" CONDUIT WITH 3 #1/0 & 1 #6 'G'.
12. 2-1 1/4" EMPTY STUBS.
13. 1 - 1 1/4" EMPTY CONDUIT FOR CONTROL WIRING BY OTHERS.
14. IRRIGATION CONTROLLER, 120V. N.I.E.S.
15. 1 - 1" EMPTY CONDUIT FOR TELEPHONE LINE.
16. SEE ONE-LINE DIAGRAM FOR CONDUIT & WIRE SIZE.

CONCRETE PULL BOX SCHEDULE

BOX NO.	APPROX SIZE (INTERIOR)	LABEL
P1	10" X 17"	SIGNAL
P2	10" X 17"	ELECTRICAL

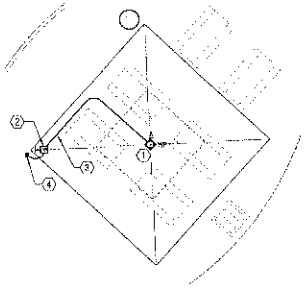

2 ENLARGED SITE PLAN - ELECTRICAL
SCALE: 1/8"=1'-0"

ECOM ENGINEERING INC.
1706 TRIBUTE ROAD, SUITE 100
SACRAMENTO, CA. 95815
915.641.5600
916.641.1640 FAX
www.ecomengineering.com

JOB NO. 13H254.00 PM MSS
DESIGNED JF
DRAWN BY ECOM

811 Know what's below. Call before you dig.

CITY OF SACRAMENTO
DEPARTMENT OF PARKS & RECREATION
PARK, PLANNING & DEVELOPMENT SERVICES
LANDSCAPE ARCHITECTURE SECTION
915 I STREET, FLOOR 5, SACRAMENTO, CA 95814

DOGWOOD PARK
SITE PLAN - ELECTRIAL

LANDSCAPE ARCHITECT D.DAY
DESIGN BY/DRAWN BY D.DAY/J. WIESEMANN
CAD FILE
DATE
SCALE AS SHOWN
P. N. L19185000
REVISIONS

SHEET NO. E3 OF 21

CEC LOAD CALCULATIONS

METERED PEDESTAL.
120/240 VOLT, 1-PHASE, 3-WIRE
100 AMPS.

LOAD	CONNECTED LOAD (KVA)	DEMAND FACTOR	TOTAL KVA
MOTOR LOADS	9.00	125%	11.25
LIGHTING LOADS	0.04	125%	0.05
RECEPTACLE LOADS	0.18	100%	0.18
	11.48 / .240 = 47.8 AMPS.		11.48

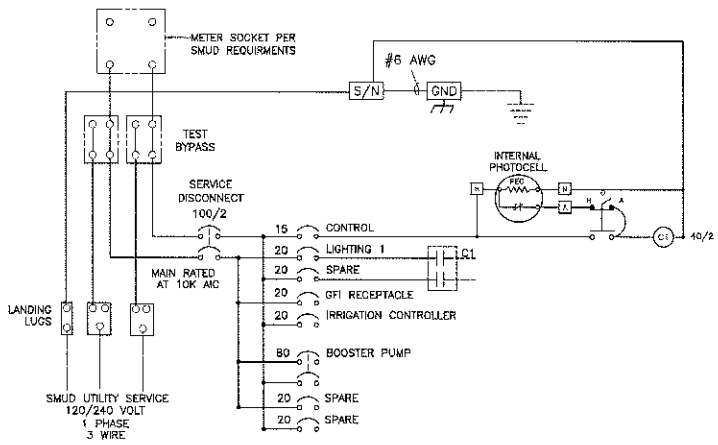

1 **POWER PEDESTAL WIRING DIAGRAM**
NO SCALE

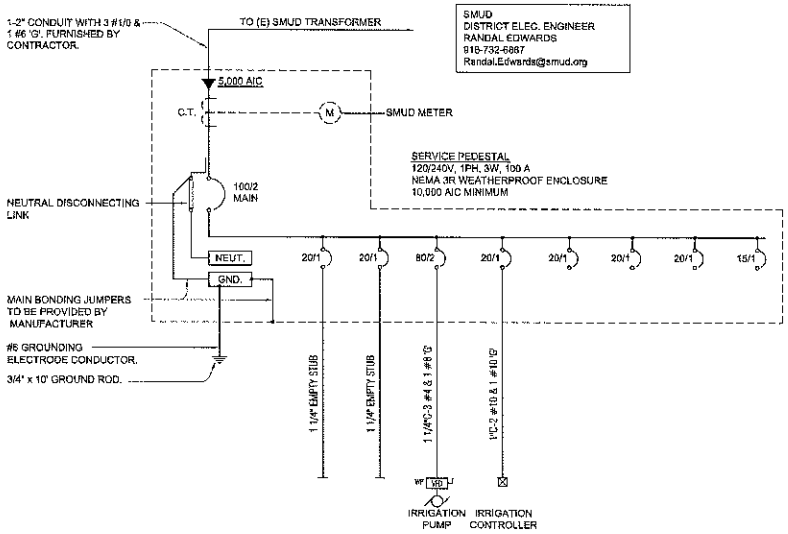

2 **ONE LINE DIAGRAM**
NO SCALE

ECOM ENGINEERING INC.
1736 TRIBUTE ROAD, SUITE 100
SACRAMENTO, CA. 95815
916.641.6600
916.641.1640 FAX
WWW.ECOMENG.COM

Know what's below. Call before you dig.

CITY OF SACRAMENTO
DEPARTMENT OF PARKS & RECREATION
PARK, PLANNING & DEVELOPMENT SERVICES
LANDSCAPE ARCHITECTURE SECTION
915 I STREET, FLOOR 5, SACRAMENTO, CA 95814

DOGWOOD PARK
ONE-LINE AND WIRING DIAGRAMS

LANDSCAPE ARCHITECT: D.DAY
DESIGN BY/DRAWN BY: D.DAY/J. WESEMANN
CAD FILE
DATE
SCALE AS SHOWN
P. N. L19105000
REVISIONS

SHEET NO. E4 OF 21

WallaceKuhl
& ASSOCIATES

Geotechnical Engineering Report
DOGWOOD PARK
WKA No. 8890.11P
August 30, 2011

Prepared For:
City of Sacramento
Department of Parks and Recreation
Landscape Architecture Section
915 I Street, Fifth Floor
Sacramento, California 95814

Wallace Kuhl & Associates

Corporate Office
3050 Industrial Boulevard
West Sacramento, CA 95691
916.372.1434 phone
916.372.2565 fax

Stockton Office
3422 West Hammer Lane, Suite D
Stockton, CA 95219
209.234.7722 phone
209.234.7727 fax

Reno Office
9670 North Virginia Street
Reno, NV 89506
775.626.0300 phone
775.626.0309 fax

August 30, 2011

Ms. Tin-Wah Wong
Associate Landscape Architect
City of Sacramento
Department of Parks & Recreation
Landscape Architecture Section
915 I Street, Fifth Floor
Sacramento, California 95814

Geotechnical Engineering Report
DOGWOOD PARK
Sacramento, California
WKA No. 8890.11P

As authorized, we have completed our investigation for the Dogwood Park project in Sacramento, California. The purposes of our work have been to explore the existing soil conditions and to provide geotechnical engineering conclusions and recommendations for the project. This letter presents the results of our investigation work.

Our scope of work has included the following:

- Drilling and sampling at four soil boring locations;
- Obtaining bulk samples of the subgrade soils within the proposed improvement areas;
- Laboratory Expansion Index and Resistance ("R") value testing of the bulk soil samples;
- Engineering evaluation; and,
- Preparation of this report.

Our scope of work was performed in general accordance with our *Geotechnical Engineering Services Proposal* (WKA No. 2PR11127) dated July 19, 2011 and approved on July 20, 2011.

Site Description

Our review of an undated site plan and an undated drawing titled *Dogwood Park Site*, both provided by the City of Sacramento Department of Parks and Recreation, indicates Dogwood Park will be located at 3075 Macon Drive, which is on the north side of Macon Drive between Kandinsky and Van Eyck Ways in Sacramento, California. At the time of our field exploration,

the site was vacant and covered in soil and low-lying brush. The site appeared to have recently been disced.

The proposed park site is bound on the north, south, and west by roadways and to the west by existing residential properties. The west end of the site appears to be separated from the residential properties by a concrete masonry unit (CMU) soundwall.

Although existing topographic information was not provided, our observations indicate the site is relatively flat. Based on topographic information provided on the *United States Geological Survey (USGS) 7.5 Minute Series Topographic Map-Taylor Monument Quadrangle* (dated 1967 and photorevised in 1980), the existing ground surface elevation at the site is about +25 feet relative to mean sea level (msl) based on the National Geodetic Vertical Datum (NGVD), 1929.

Project Description

We understand the project will consist of the design and construction of a new park site. The improvements will consist of a group picnic area with shade structure, horse shoe court, bocce ball court, play areas (tot lot & adventure play), interactive water mister, half basketball courts, bantam size soccer field, seating areas, walkways, fitness stations, irrigation system, and landscaping.

Based on the existing topography across the site and our understanding of the proposed improvements, we anticipate cuts and fills of about one to two feet will be required to establish final subgrade levels across the site.

Site Investigation and Sampling

Four exploratory borings were drilled on July 27, 2011 utilizing a John Deere 4x6 Gator-mounted Giddings drill rig. Relatively undisturbed soil samples were recovered at various depths using a 12-inch long, 2½-inch outside diameter (O.D.), 2-inch inside diameter (I.D.) modified California sampler driven by an 80-pound hand operated slide hammer falling approximately 18 inches.

The samples were retained in 2-inch diameter by 6-inch long thin-walled brass tubes contained within the sampler. Immediately after recovery, the field engineer visually classified the soils in the tubes and the ends of the tubes were sealed to preserve the natural moisture content. All samples were taken to our laboratory for additional classification and selection of samples for testing. The Logs of Soil Borings D1 through D4 attached (Figures 3 through 6), contain descriptions of the soils encountered in each boring. The soil samples were visually classified in

general accordance with the Unified Soil Classification System (USCS), which is attached for reference as Figure 7.

Bulk samples of the near-surface subgrade soils were encountered at the site. The samples were obtained from the ground surface to about three feet below the existing ground surface. Composite samples of subgrade soil were returned to our laboratory for additional testing.

The approximate boring and bulk sample locations are indicated on the attached Site Plan (Figure 2).

Laboratory Testing

Selected undisturbed samples of the soil were tested to determine dry unit weight (American Society of Testing and Materials [ASTM] D2937), natural moisture content (ASTM D2216), and shear strength by unconfined compressive strength testing (ASTM D2166). The results of the moisture/density tests and the unconfined compressive strength test are included on the boring logs at the depth each sample was obtained.

A composite sample of the anticipated near-surface soils were subjected to Expansion Index testing (ASTM D4829) to determine the expansion potential of the soil. Results of this test are contained on Figure 8.

A composite sample of the anticipated subgrade soil was subjected to R-value testing in accordance with California Test 301. Results of the Resistance value test are contained on Figure 9.

A representative sample of near-surface soil was tested by Sunland Analytical Lab to determine the preliminary corrosion characteristics of the soil (California Test [CT] 417, 422 & 643). The results of the tests are presented on Figure 10.

FINDINGS

Soil and Groundwater Conditions

The soil conditions at the boring locations generally consists of about two to 3½ feet of silty clay overlying silts with varying clay, silt, and sand contents to the explored five to 11 foot depths of the borings performed at the site. Silty sand was encountered below the silts about eight feet below the existing ground surface at boring D3.

Groundwater was not encountered at the sample locations. According to the map of "Sacramento County, California Ground Water Elevations, Spring 2007," prepared by the County of Sacramento (drawn March 2009), groundwater beneath the site is shown at an approximate elevation of +5 feet msl (reference datum not provided), or about 25 feet below the existing ground surface.

CONCLUSIONS

Seismic Code Parameters

We understand the design of the proposed improvements will be performed using the 2010 edition of the California Building Code (CBC). Based on the 2010 CBC and Chapter 11 of the American Society of Civil Engineers (ASCE) 7-05, *Seismic Design Criteria*, the site parameters may be determined based on the site latitude and longitude using the public domain computer program developed by the USGS. The following parameters may be used for seismic design of the park improvements using the 2010 CBC.

ASCE 7-05 Section 11 / 2010 CBC Chapter 16 Seismic Design Parameters

Latitude: 38.6805 ° N Longitude: 121.5291 ° W	ASCE 7-05 Table/Equation	2010 CBC Table/Equation	Factor/ Coefficient	Value
Short-Period MCE at 0.2s	N/A[1]	N/A[1]	S_S	0.575 g
1.0s Period MCE	N/A[1]	N/A[1]	S_1	0.241 g
Site Class	Table 20.3-1	Table 1613.5.2	--	D
Site Coefficient	Table 11.4-1	Table 1613.5.3(1)	F_a	1.340
Site Coefficient	Table 11.4-2	Table 1613.5.3(2)	F_v	1.917
Adjusted MCE Spectral Response Parameters	Equation 11.4-1	Equation 16-36	S_{MS}	0.771 g
	Equation 11.4-2	Equation 16-37	S_{M1}	0.463 g
Design Spectral Acceleration Parameters	Equation 11.4-3	Equation 16-38	S_{DS}	0.514 g
	Equation 11.4-4	Equation 16-39	S_{D1}	0.309 g
Seismic Design Category	Table 11.6-1	Table 1613.5.6(1)	Occupancy I to IV	D
	Table 11.6-2	Table 1613.5.6(2)	Occupancy I to IV	D

[1]: USGS Seismic Hazard Calculator version 5.1.0

Our subsurface exploration performed at the site indicates the site is underlain by relatively stiff silty clays and silts, which generally are not considered susceptible to liquefaction. Based on our subsurface exploration, it is our opinion that loose cohesionless soils likely do not exist in significant thickness beneath the water table at the site, and the potential for liquefaction of the soils beneath the site is considered to be very low.

Soil Expansion Potential

The Expansion Index test performed on a soil sample obtained within the upper three feet of soil at bulk sample location B1 indicates the near-surface soils encountered at the site possess a high expansion potential. Expansion test results are attached as Figure 8.

The clayey subgrade soils are expected to experience significant volume changes with increasing or decreasing soil moisture contents, and are considered capable of exerting expansion pressures upon pavements and concrete slabs-on-grade, including sidewalks. Therefore, at least 12 inches of imported non-expansive soils will be required beneath the concrete slabs-on-grade (i.e., basketball courts, picnic area, and sidewalks), and/or chemical amendment of soils (i.e., lime-treatment) could be considered. Additional recommendations regarding subgrade preparation to resist soil expansion pressures for at-grade concrete slabs are provided below and in the Subgrade Preparation section of this report.

Bearing Capacity

Following site clearing, we anticipate the upper 12 inches of the soils at the site will become disturbed and will require processing and recompaction. Our work indicates that undisturbed native soils and engineered fills constructed in accordance with the recommendations of this report will be capable of supporting the proposed improvements.

Pavement Subgrade Quality

Laboratory testing of the near-surface soils indicates those soils are relatively poor quality materials for support of asphalt concrete or concrete pavements and Portland cement concrete flatwork. Laboratory test results on a representative bulk sample of near surface soils revealed an R-value of five when tested in accordance with California Test 301 (refer to Figure 9).

Chemical Treatment of Soil

Based on the soil expansion potential and the relatively poor pavement subgrade quality of the on-site clays, we anticipate chemical treatment of the clay soils can significantly improve the support quality of the clays and reduce the required thickness of the base materials. Specifically, based upon laboratory testing and our experience with similar soil types, it is our opinion that pavements supported on native clay soils treated with at least four percent (by dry weight of soil) lime can be designed using an R-value of 50.

Lime-treatment of soil can be a very effective and economical method to increase the subgrade quality of clayey subgrades to support pavements; to reduce the moisture content of near-saturated soils, enabling construction to proceed during or shortly after the rainy season; and, to reduce the expansive characteristics of clayey subgrades. **Proper lime-treatment of the near-surface soils in the concrete slab-on-grade areas would substantially reduce the risk of post-construction differential movement of the subgrade soils.**

The performance of lime-stabilized soils is critically dependent on uniform mixing of the lime into the subgrade and providing for a proper curing period following amendment with the lime. An experienced lime-stabilization contractor coupled with a comprehensive quality control program are generally required to achieve the best possible stabilized subgrade.

The major disadvantage of lime-treated subgrades supporting pavements results from shrinkage of the treated material, similar to shrinkage of structural concrete, and reflective cracking through the asphalt concrete surface. Proper curing techniques, as outlined in the attached *Guide Earthwork Specifications*, can minimize this effect. In addition, chemical treatment within the turf and landscape areas should be avoided as chemical amendment will prohibit vegetative growth, where used.

Excavation Conditions

During construction, the contractor(s) must provide safely sloped excavations or adequately constructed and braced shoring system(s) in accordance with federal, state, and local safety regulations to protect individuals working in an excavation that may expose them to the danger of moving ground and to support existing improvements as necessary.

Based on the information obtained at the bulk sample locations and our local experience, we anticipate the near-surface soils at the site will be readily excavatable with conventional earthmoving and trenching equipment.

Excavations less than five feet deep likely will stand at a near-vertical inclination for short periods of time. However, on-site soils may be susceptible to sloughing and caving if zones or pockets of cohesionless soils are encountered, if cohesionless soils are allowed to dry, or if construction is performed during the rainy season. Excavations encountering groundwater may slough or cave if left open for an extended period of time. Excavations entered by workers must conform to current Occupational Safety and Health Administration (OSHA) requirements (i.e., sloped excavations or braced shoring). If material is stored or heavy equipment is operated near an excavation, stronger shoring must be used to resist the extra pressure due to the superimposed loads.

Groundwater

Based on the groundwater information in the area and our subsurface investigation, a permanent groundwater table should not be a significant factor in development of this site. However, saturation of surface soils should be expected from rainfall, surface run-off, or irrigation. In general, standard sump pit and pumping procedures should be adequate to control localized seepage into required excavations.

Seasonal Water

Infiltrating surface run-off water from irrigation and/or seasonal moisture during the winter and spring months will create saturated surface soil conditions. It is probable that grading operations attempted following the onset of winter rains, prior to prolonged drying periods will be hampered by high soil moisture contents. Such soils, intended for use as engineered fill, will require a prolonged period of dry weather and aeration, or chemical treatment, to reach a moisture content suitable for proper compaction. However, chemical treatment within the turf and landscape areas should be avoided as chemical amendment will prohibit vegetative growth, where used.

Preliminary Soil Corrosion Potential

A composite sample of near-surface soil was submitted to Sunland Analytical Lab for testing to determine pH, chloride and sulfate concentrations, and resistivity to help evaluate the potential for corrosive attack upon buried structures. Results of the soil corrosivity tests are summarized below. A copy of the test results is attached as Figure 8.

Sample Location	Depth (feet)	Soil Type	pH	Chloride Content (ppm)	Sulfate Content (ppm)	Resistivity (ohm-cm)

B1	0 to 3	CL	7.68	22.5	35.9	720

The California Department of Transportation Corrosion Technology Section, Office of Materials and Foundations, Corrosion Guidelines Version 1.0, September 2003, considers a site to be corrosive to foundation elements if one or more of the following conditions exists for the representative soil and/or water samples taken: has a chloride concentration greater than or equal to 500 ppm, sulfate concentration greater than or equal to 2000 ppm, or the pH is 5.5 or less. Based on this criterion, the on-site soils are not considered highly corrosive for the sample tested. Table 4.3.1 of the 2005 American Concrete Institute (ACI), *Requirements for Concrete Exposed to Sulfate-Containing Solutions*, indicates the severity of sulfate exposure for the samples tested are *Negligible*. We anticipate ordinary Type I-II Portland cement is suitable for use on this project. It should be noted that resistivity tests less than 1000 ohm-cm are known to shorten the life of buried structures or piping (California Test 643). Therefore, the corrosion potential of the soil should be considered in the design of below grade structures and piping.

We emphasize that Wallace-Kuhl & Associates (WKA) are not corrosion engineers. Therefore, if it is desired to further define the soil corrosion potential at the site or to determine the need, and design parameters, for cathodic protection, a corrosion engineer should be consulted.

RECOMMENDATIONS

Site Clearing

Initially, the site should be cleared of existing structures (if any), utilities, irrigation, vegetation, debris, and other deleterious materials to expose undisturbed native soils. Where practical, the clearing should extend a minimum of five feet beyond the limits of the proposed structural areas.

Underground utilities within the proposed construction areas should be completely removed or rerouted. Depressions resulting from removal of the clearing operations, underground utilities, and below-grade structures, as identified by our representative should be cleaned out to firm undisturbed soils and the excavation widened, as necessary, to allow access with compaction equipment. Depressions should be backfilled with engineered fill in accordance with the recommendations of this report.

Existing depressions and depressions resulting from removal of underground structures (if any) should be cleaned of loose soil and properly backfilled in accordance with the recommendations of this report.

Surface vegetation should be removed from the construction areas by stripping. Strippings should be hauled off-site or placed in landscape areas a minimum of five feet from proposed structural areas of the site (e.g., buildings, pavements, sidewalks, etc.). Discing of organics into the surface soils may be a suitable alternate to stripping, depending on the condition and quantity of organics at the time of grading. The decision to utilize discing in lieu of stripping should be made by our representative at the time of earthwork construction. Discing operations, if approved, should be observed by our representative and must be continuous until the organics are adequately mixed into the soil to provide a compactable mixture of soil containing minor amounts of organic matter. Pockets or significant concentrations of organics will not be allowed.

Subgrade Preparation

Due to the expansion characteristics of the native soils, the upper 12 inches of the final subgrade within structural areas should consist of imported non-expansive engineered fill or the native soils should be chemically amended as noted below.

If non-expansive engineered fill is used within the upper 12 inches the final subgrade, following clearing and stripping operations, the native subgrade within structural areas (i.e., exterior flatwork, pavement areas, etc.) and areas to receive fill should be scarified to a depth of at least 12 inches, or to the depth of disturbance caused by site clearing (whichever is greater). The subgrade should be moisture conditioned to at least two percent above the optimum moisture content, and compacted to at least 90 percent relative compaction (percent of the maximum dry density determined by the American Society for Testing and Materials [ASTM] D1557 test method). Original grade preparation and fill construction should extend at least two feet beyond exterior concrete and pavements.

Loose, soft, or saturated soils should be properly prepared (i.e., scarified and compacted) or excavated to expose firm, undisturbed native materials.

Site clearing and compaction operations should be performed in the presence of our representative who will evaluate the performance of the subgrade under compactive load and identify loose or unstable soils that could require additional subgrade preparation.

Final exterior flatwork subgrade moisture conditioning and compaction should be completed no more than 48 hours before the start of installation of the aggregate base for flatwork. If this is not possible, the subgrade soils should be protected from significant moisture loss prior to installation of the aggregate base.

Lime-Treated Subgrade Preparation - Alternative

Where 12-inches of lime-treated soil will be used as non-expansive fill, the upper 12 inches of the final subgrade soils should be treated with at least four percent (by dry weight of soil) high-calcium or dolomitic quicklime. At least 4½ pounds of lime per cubic foot of soil amended should be utilized to achieve the four percent mixture. Lime-stabilized soils should be compacted to at least 92 percent relative compaction, at a moisture content at least two percent over optimum conditions. If necessary, our firm can provide additional recommendations for subgrade stabilization based on the soil conditions at the time of earthwork construction.

If undisturbed native soils are to be lime-treated, the scarification and compaction procedures outlined in the Subgrade Preparation section of this report are not required, prior to lime-treatment.

Engineered Fill

If grading operations are initiated following long periods of soil drying, the near-surface soils may be in a desiccated condition. Where the depth of the desiccation cracks is deeper than 12 inches, the site should be prewatered for a period of at least 48 hours or for a time sufficient to close the desiccation cracks, and to uniformly moisture condition the underlying soils.

Engineered fill should be placed in horizontal lifts not exceeding nine inches in loose thickness. Each lift should be compacted at a uniform moisture content of at least the optimum moisture content for granular soils and two percent over optimum for clay soils to at least 90 percent of the maximum dry density, as defined above.

The upper six inches of pavement subgrade should be uniformly compacted to at least 95 percent of the maximum dry density at a moisture content of at least the optimum moisture, and must be stable under construction traffic prior to placement of aggregate base.

On-site soils may be used as fill provided they are free of organic material, debris and other deleterious material and free of rock and other particles greater than three inches in largest dimension. The native expansive clays are not suitable for use within the upper 12 inches of exterior flat work construction.

The upper 12 inches of subgrades supporting exterior slabs-on-grade should be composed of select, non-expansive, granular fill or lime-treated soils. Select fill for use under slabs-on-grade

should be compactable, granular soils, free of particles greater than three inches in maximum dimension, with less than five percent of the material greater than one-inch in size, with a plasticity index less than 15 and an expansion index less than 20. Our firm must approve import material *before* being transported to the project site. The contractor also should supply appropriate documentation for imported fill materials indicating the materials are free of known contamination and have corrosion characteristics within acceptable limits.

The upper six inches of pavement subgrades, whether achieved by excavation, filling, or left at-grade, should be processed and uniformly compacted to at least 95 percent relative compaction.

Compaction of the existing subgrade must be performed in the presence of our representative who will evaluate the performance of the subgrade under compactive load and identify loose, soft or unstable soil conditions that could require additional excavation. Loose, soft or saturated soil deposits encountered during compaction operations should be removed to expose firm undisturbed soils and backfilled with engineered fill as recommended in this report.

Utility Trench Backfill

Bedding and initial backfill for utility construction should conform with the pipe manufacturers recommendations and applicable sections of the governing agency standards. General trench backfill should consist of engineered fill backfilled in maximum nine-inch thick loose lifts with each lift compacted to at least 90 percent of the maximum dry density as determined by ASTM D1557. Utility trench backfill within the upper six inches of the final subgrade within pavement areas should be compacted to at least 95 percent of the maximum dry density.

We recommend that all underground utility trenches aligned nearly parallel with flatwork and foundations, if any, be at least five feet from the flatwork or foundations, wherever possible. If this is not practical, the trenches should not encroach on a zone extending at a one horizontal to one vertical (1:1) inclination below the edge of the flatwork or foundations.

Foundation Design

Shallow Foundations

We understand relatively lightly loaded structures will be constructed at the site. If foundations are required to support the structures, the improvement may be supported on a continuous

perimeter foundation and continuous or isolated interior foundations. Foundations should be embedded at least 18 inches below lowest adjacent soil grade. Isolated foundations should be at least 24 inches wide; continuous foundations should be at least 12 inches wide. Foundations so established may be sized for maximum allowable soil pressures of 3000 pounds per square foot (psf) for dead plus live load with a 1/3 increase for the short-term effects of wind or seismic forces. The weight of the foundation concrete extending below adjacent soil grade may be disregarded in sizing computations.

We recommend continuous foundations contain at least four No. 4 bars placed two each near the top and bottom of the foundation; however, final foundation reinforcement should be determined by the project structural engineer.

Resistance to lateral displacement of foundations may be computed using an allowable friction factor of 0.25, multiplied by the effective vertical load on each foundation. Additional lateral resistance can be achieved by considering *passive* soil resistance against the vertical projection of the foundations equivalent to a fluid weighing 250 pounds per cubic foot (pcf). These two modes of resistance (friction and *passive* pressure) should not be added unless the frictional component is reduced by one half due to the mobilization of the resistive forces occurring at different degrees of horizontal movement.

We recommend that all foundation excavations be observed by our representative prior to placement of reinforcement and concrete to verify firm bearing materials are exposed. If unsuitable materials are encountered at the proposed bottom of foundation elevation, the unsuitable materials should be removed and replaced with suitable material compacted to 90 percent of the maximum dry density as determined by ASTM D1557 Compaction Test. Alternatively, the foundation may be extended deeper to bear directly on suitable soils.

We estimate total settlement for continuous footing foundations using the recommended maximum net allowable bearing pressures presented above, should be less than one inch. Differential settlements are estimated to be about one-half the total settlement within individual structures and as much as the total settlement between structurally isolated foundations. These settlement estimates are based on the available boring information, our experience with similar structures and soil conditions, and field verification of suitable bearing soils during foundation construction.

Cast-In-Place Drilled Pier Foundations

Drilled pier foundations are suitable for support of light poles and relatively lightly loaded structures. The piers should extend at least three feet below the lowest adjacent soil grade and

have a minimum shaft diameter of 18 inches to help facilitate proper cleaning of the bottom of the pier excavations. Drilled piers founded within undisturbed native soils may be sized utilizing a maximum allowable vertical bearing capacity of 3000 psf or an allowable skin friction of 250 psf for dead plus live loads, which may be applied over the surface of the pier extending deeper than 12 inches below the lowest adjacent soil grade. Those values may be increased by one-third to include short-term wind or seismic forces. The weight of foundation concrete below grade may be disregarded in sizing computations.

Uplift resistance of pier foundations may be computed using the following resisting forces, where applicable: 1) weight of the pier concrete (150 pounds per cubic foot [pcf]) and, 2) the allowable skin friction of 250 psf applied over the shaft area of the pier. Increased uplift resistance can be achieved by increasing the diameter of the pier or increasing the depth.

Sizing of piers to resist lateral loads can be evaluated using Section 1807.3.2 of the 2010 CBC. A value of 250 pcf for lateral bearing as defined in Table 1806.2 of the CBC may be used for the coefficients S_1 and S_3 for the nonconstrained and constrained conditions, respectively. Per Section 1806.1 of the 2010 CBC, an increase of 1/3 is permitted when using the alternate load combinations in Section 1605.3.2 that include wind or earthquake loads. The upper 12 inches of the subgrade should be neglected for the nonconstrained condition. In addition, as noted in Section 1804.3.4 of the 2010 CBC, "isolated poles for uses such as flagpoles or signs and poles used to support buildings that are not adversely affected by a ½ inch motion at the ground surface due to short-term loads shall be permitted to be design using lateral bearing pressures equal to two times the tabular values."

Reinforcement and concrete should be placed in the pier excavations as soon as possible after excavation is completed to minimize the chances of sidewall caving into the excavations. Although we do not anticipate excessive sloughing of the sidewalls during pier construction, we recommend that the pier contractor be prepared to case the pier holes if conditions require.

The bottom of the pier excavations should be free of loose or disturbed soils prior to placement of concrete. Cleaning of the bearing surface should be verified by the geotechnical engineer prior to concrete placement.
If the drilled piers are constructed in the "dry" (with dry being less than two inches of water at the base of the excavation), the concrete may be placed by the free-fall method, using a short hopper or back-chute to direct the concrete flow out of the truck into a vertical stream of flowing concrete with a relatively small diameter. The stream is directed to avoid hitting the sides of the excavation or any reinforcing cages. For the free-fall method of concrete placement, we recommend the concrete mix be designed with a slump of five to seven inches.

In general, we anticipate the drilled pier excavations will be relatively dry. However, if groundwater is encountered which cannot be controlled such that more than six inches of water accumulates at the bottom of the pier excavation, concrete should be placed using a tremie.

When extracting temporary casings or tremie methods from the excavation, care should be taken to maintain a head of concrete to prevent infiltration of water and soil into the shaft area. The head of concrete should always be greater than the head of water trapped outside the pier or tremie, taking into account the differences in unit weights of concrete and water.

To reduce lateral movement of the drilled shafts, it is necessary to place the concrete for the drilled shafts in intimate contact with the surrounding soil. Any voids or enlargements in the shafts due to over-excavation or temporary casing installation shall be filled with concrete at the time the shaft concrete is placed.

We estimate total settlement for drilled pier foundations using the recommended maximum net allowable bearing pressure and allowable capacities presented above, should be less than one inch. Differential settlements may be as much as the total settlement between individual pier elements. The settlement estimates are based on the available soil information, our experience with similar structures and soil conditions, and field verification of suitable bearing soils during foundation construction.

Site Drainage

Performance of the park improvements is dependent upon control of surface water on the site. The ground adjacent to structural improvements should be sloped away from the structures at a gradient no less than two percent for a distance of at least 10 feet. Roof drainage downspouts, if any, should be connected to nonperforated rigid piping directed to an appropriate drainage point away from the structure. Ponding of surface water should not be allowed within 10 feet of the structures or pavement areas. Landscape berms, if planned, should not be constructed in such a manner as to promote drainage toward any structures or pavements.

Exterior Concrete Flatwork

Exterior concrete flatwork should be constructed on at least 12-inches of non-expansive compactable soil or 12-inches of lime-treated soil compacted in accordance with the recommendations of this report.

Granular soil subgrades for flatwork should be scarified, moisture conditioned to at least the optimum moisture and compacted immediately prior to concrete placement. This would not be required if the subgrades are lime-treated. Aggregate base could be used as a leveling course under flatwork if necessary, compacted to not less than 95 percent relative compaction.

Flatwork should be at least four inches thick and reinforced for crack control. Reinforcement should include, as a minimum, chaired No. 3 rebar located on maximum 18-inch centers, both ways, throughout slabs. Accurate and consistent location of the reinforcement at mid-slab is essential to its performance and the risk of uncontrolled drying shrinkage slab cracking is increased if the reinforcement is not properly located within the slab.

Uniform moisture conditioning of subgrade soils is important to reduce the risk of non-uniform moisture withdrawal from the concrete and the possibility of plastic shrinkage cracks. Practices recommended by the Portland Cement Association (PCA) for proper placement and curing of concrete should be followed during exterior concrete flatwork construction. Flatwork should be independent of the building foundations and felt strips should be used to separate concrete slabs from building foundations.

The architect or civil engineer should determine the final thickness, strength, reinforcement, and joint spacing of exterior slab-on-grade concrete. Exterior flatwork next to landscaped areas should be thickened to twice the slab thickness for a width of at least 12 inches to help support lawn mowing equipment and other maintenance equipment.

Pavement Design

Where exterior flatwork will be subjected to lightweight vehicle traffic (pick-up trucks), the flatwork should be designed as a pavement. Portland cement concrete should be at least five inches thick and be underlain by at least 12 inches of Class 2 aggregate base over an untreated subgrade or at least four inches of Class 2 aggregate base over a lime-treated subgrade. Aggregate base should be compacted to at least 95 percent relative compaction. Thicker sections would be required for heavier traffic conditions.

The Portland cement concrete should achieve a minimum compressive strength of 3500 pounds per square inch (psi) at 28 days. For crack control, slabs should contain at least chaired No. 3 reinforcing bars placed on maximum 24-inch centers. Reinforcement must be located at mid-slab depth to be effective. Consideration should be given to using slabs with thickened edges, at least two inches plus the slab thickness and 36 inches wide in accordance with ACI design standards. Reinforcing details, concrete curing, joint spacing and construction should conform with current PCA and ACI guidelines.

We emphasize that the performance of a pavement is critically dependent upon uniform compaction of the subgrade soils, as well as all engineered fill and utility trench backfill within the limits of the pavements. The upper six inches of pavement subgrades should be compacted to at least 95 percent of the ASTM D1557 maximum dry density at no less than the optimum moisture content, and must be stable under construction traffic prior to placement of aggregate base. Class 2 aggregate base should be compacted to at least 95 percent of the ASTM D1557 maximum dry density.

It has been our experience that pavement distress and failures may occur where a non-uniform or disturbed subgrade soil condition is created. Subgrade disturbances can result if pavement subgrade preparation is performed prior to underground utility construction and/or if a significant time period passes between subgrade preparation and placement of aggregate base. Therefore, we recommend that final pavement subgrade preparation (i.e. scarification, moisture conditioning, and compaction) be performed just prior to aggregate base placement.

Materials quality and construction within the structural section of the pavement should conform to the applicable provisions of the latest editions of the *Caltrans Standard Specifications.*

Additional Services

We also recommend that our firm be retained to review final plans and specifications to determine if the intent of our recommendations has been implemented into those documents.

LIMITATIONS

Our recommendations are based upon the information provided regarding the proposed project, combined with our analysis of site conditions revealed by the field exploration and laboratory testing programs. We have used our best engineering judgment based upon the information provided and the data generated from our investigation.

This report has been prepared in substantial compliance with generally accepted geotechnical engineering practices that exist in the area of the project at the time the report was prepared. No warranty, either express or implied, is provided.

If the proposed construction is modified or re-sited; or, if it is found during construction that subsurface conditions differ from those we encountered at our boring and bulk sample locations,

we should be afforded the opportunity to review the new information or changed conditions to determine if our conclusions and recommendations must be modified.

We emphasize that this report is applicable only to the proposed construction and the investigated site, and should not be utilized for construction on any other site.

We appreciate the opportunity to provide you with our services. Please contact us if you have any questions or require additional information.

Wallace-Kuhl & Associates

Matthew S. Moyneur
Project Engineer

REGISTERED PROFESSIONAL ENGINEER
MATTHEW S. MOYNEUR
NO. 2920
Exp. 6/30/12
GEOTECHNICAL
STATE OF CALIFORNIA

Attachments: Vicinity Map (Figure 1)
Site Plan (Figure 2)
Logs of Soil Borings (Figures 3 and 6)
Unified Soil Classification System (Figure 7)
Expansion Index Test Results (Figure 8)
Resistance Value Test Results (Figure 9)
Corrosion Test Results (Figure 10)

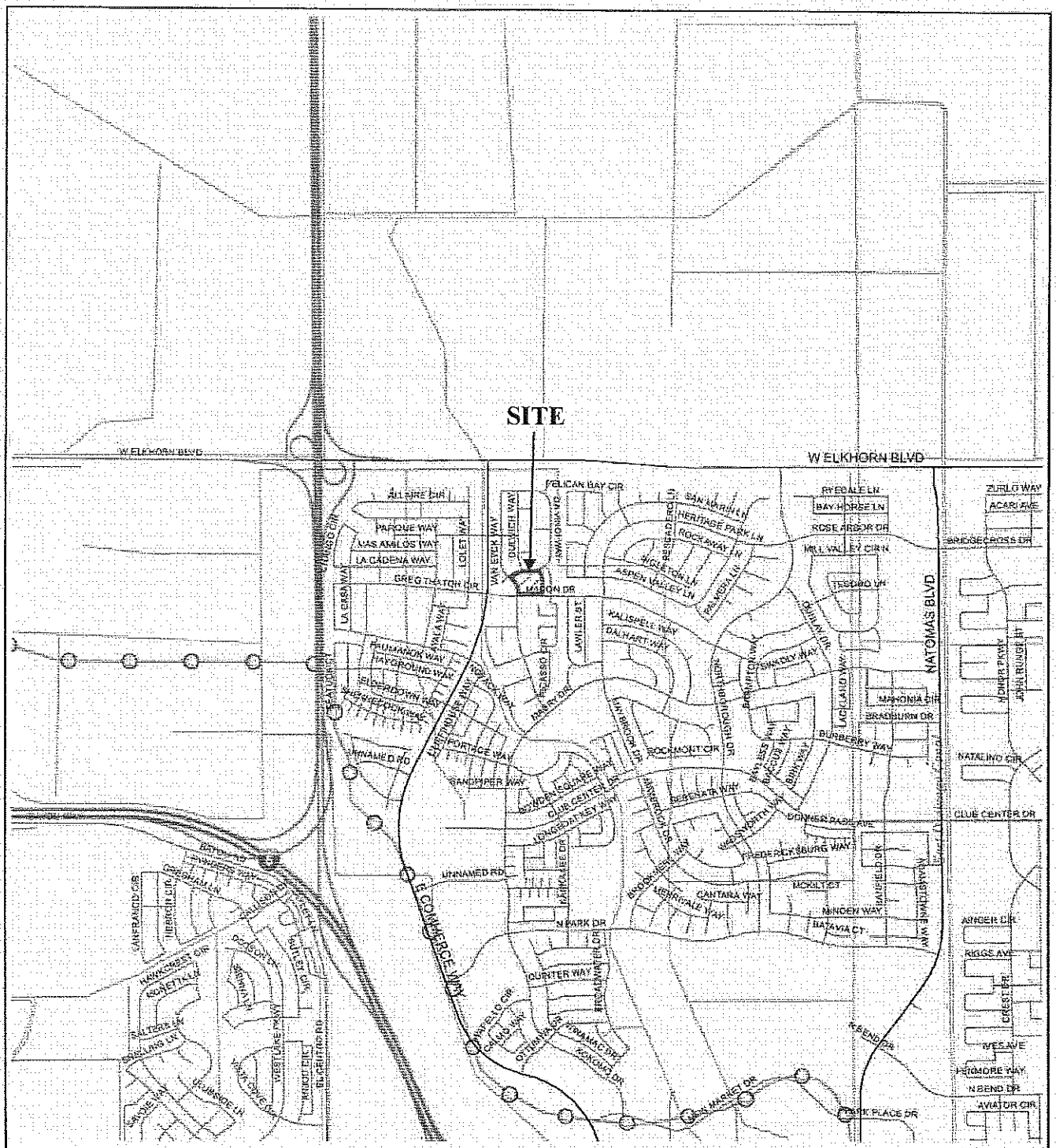

Adapted from data provided by the Sacramento Area Council of Governments, 2008
Projection: NAD 83, California State Plane, Zone II

N

0 1,000 2,000
Feet

WallaceKuhl & Associates

VICINITY MAP

DOGWOOD PARK

Sacramento, California

FIGURE	1
DRAWN BY	TJC
CHECKED BY	MSM
PROJECT MGR	MSM
DATE	8/11
WKA NO. 8890.11P	

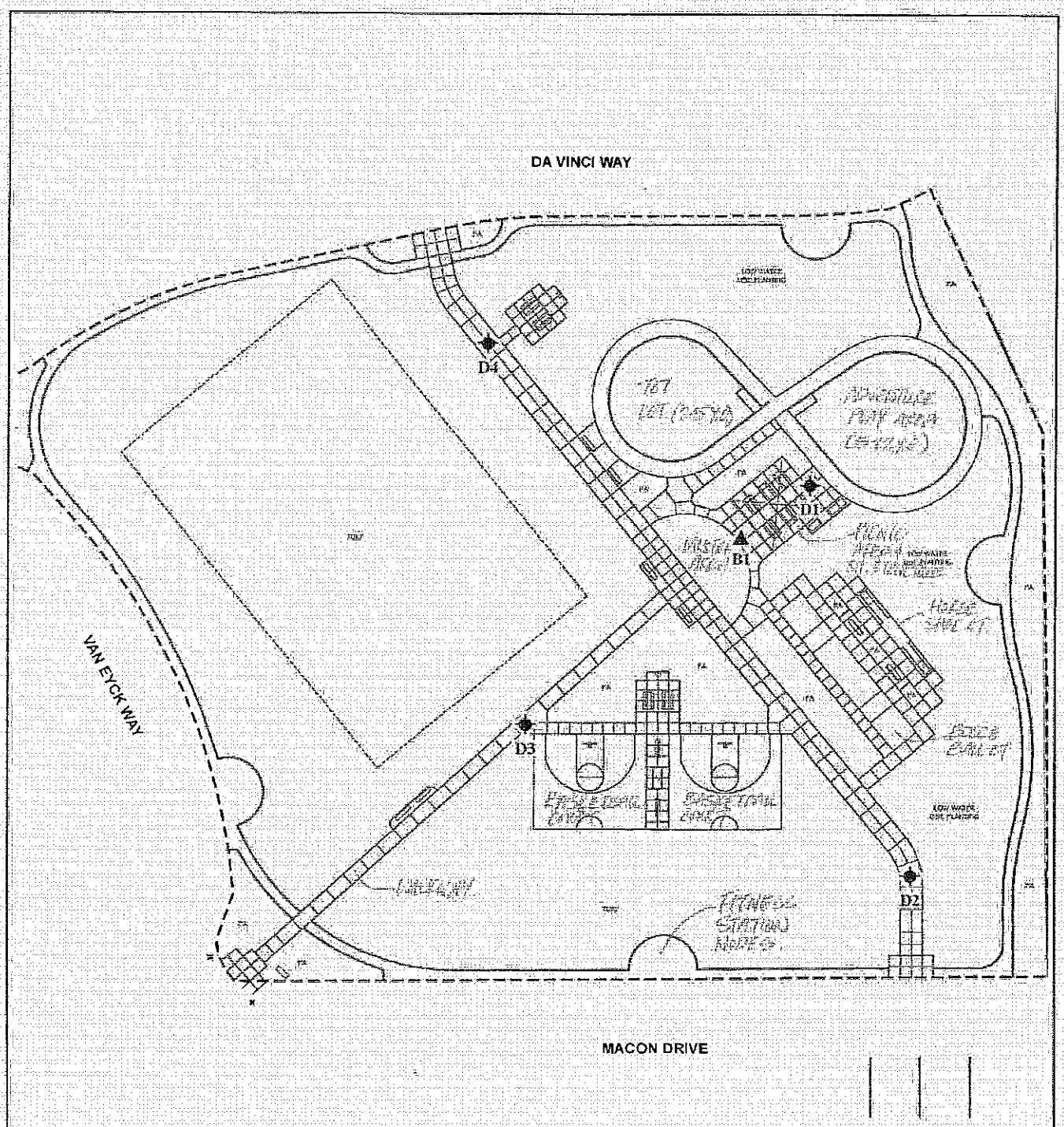

Adapted from a drawing provided by ?

Projection: NAD 83, California State Plane, Zone II

Legend

- Approximate soil boring location
- Approximate bulk sample location

N

0 30 60

Feet

Wallace Kuhl

SITE PLAN

DOGWOOD PARK

Sacramento, California

FIGURE	2
DRAWN BY	TJC
CHECKED BY	MSM
PROJECT MGR	MSM
DATE	8/11

WKA NO. 8890.11P

Project: Dogwood Park
Project Location: Sacramento, California
WKA Number: 8890.11P

LOG OF SOIL BORING D1

Sheet 1 of 1

Date(s) Drilled	7/27/11	Logged By	MSM	Checked By	MSM
Drilling Method	Solid Stem Auger	Drilling Contractor	WKA	Total Depth of Drill Hole	11.0 feet
Drill Rig Type	Giddings	Diameter(s) of Hole, inches	4	Approx. Surface Elevation, ft MSL	
Groundwater Depth [Elevation], feet	Not Encountered	Sampling Method(s)	Open drive sampler with 6-inch sleeve	Drill Hole Backfill	Auger Cuttings
Remarks				Driving Method and Drop	80 lb hammer, 18 inch drop

ELEVATION, feet	DEPTH, feet	GRAPHIC LOG	ENGINEERING CLASSIFICATION AND DESCRIPTION	SAMPLE DATA: SAMPLE	SAMPLE DATA: SAMPLE NUMBER	SAMPLE DATA: NUMBER OF BLOWS	TEST DATA: MOISTURE CONTENT, %	TEST DATA: DRY UNIT WEIGHT, pcf	TEST DATA: ADDITIONAL TESTS
			Light brown and brown, sandy, silty clay (CL)		D1-1		18.7	86	
			Brown, clayey silt with trace sand (ML)						
	5				D1-2		19.1	101	UCC= 2.4 tsf
			Brown, silt with sand and trace clay (ML)						
	10				D1-3				
			End of boring at ~11 feet below the ground surface. Groundwater was not encountered.						

BORING LOG 8890.11P DOGWOOD PARK.GPJ WKA.GDT 8/30/11 10:14 AM

Wallace Kuhl & Associates

FIGURE 3

Project: Dogwood Park
Project Location: Sacramento, California
WKA Number: 8890.11P

LOG OF SOIL BORING D2

Sheet 1 of 1

Date(s) Drilled	7/27/11	Logged By	MSM	Checked By	MSM
Drilling Method	Solid Stem Auger	Drilling Contractor	WKA	Total Depth of Drill Hole	7.0 feet
Drill Rig Type	Giddings	Diameter(s) of Hole, inches	4	Approx. Surface Elevation, ft MSL	
Groundwater Depth [Elevation], feet	Not Encountered	Sampling Method(s)	Open drive sampler with 6-inch sleeve	Drill Hole Backfill	Auger Cuttings
Remarks				Driving Method and Drop	80 lb hammer, 18 inch drop

ELEVATION, feet	DEPTH, feet	GRAPHIC LOG	ENGINEERING CLASSIFICATION AND DESCRIPTION	SAMPLE DATA: SAMPLE	SAMPLE NUMBER	NUMBER OF BLOWS	TEST DATA: MOISTURE CONTENT, %	DRY UNIT WEIGHT, pcf	ADDITIONAL TESTS
			Light brown and brown, sandy, silty clay (CL)						
			Brown and light brown, variably cemented, sandy silt with trace clay (ML)		D2-1		15.9	98	
	5				D2-2		21.8	104	
			End of boring at ~7 feet below the ground surface. Groundwater was not encountered.						

Wallace Kuhl & Associates

FIGURE 4

Project: Dogwood Park
Project Location: Sacramento, California
WKA Number: 8890.11P

LOG OF SOIL BORING D3

Sheet 1 of 1

Date(s) Drilled	7/27/11	Logged By	MSM	Checked By	MSM
Drilling Method	Solid Stem Auger	Drilling Contractor	WKA	Total Depth of Drill Hole	10.0 feet
Drill Rig Type	Giddings	Diameter(s) of Hole, inches	4	Approx. Surface Elevation, ft MSL	
Groundwater Depth [Elevation], feet	Not Encountered	Sampling Method(s)	Open drive sampler with 6-inch sleeve	Drill Hole Backfill	Auger Cuttings
Remarks				Driving Method and Drop	80 lb hammer, 18 inch drop

ELEVATION, feet	DEPTH, feet	GRAPHIC LOG	ENGINEERING CLASSIFICATION AND DESCRIPTION	SAMPLE	SAMPLE NUMBER	NUMBER OF BLOWS	MOISTURE CONTENT, %	DRY UNIT WEIGHT, pcf	ADDITIONAL TESTS
			Light brown and brown, sandy, silty clay (CL)						
			Brown, variably cemented, sandy silt with trace clay (ML)						
	5				D3-1		17.1	105	
			Brown, silty fine sand (SM)						
					D3-2				
	10		End of boring at ~10 feet below the ground surface. Groundwater was not encountered.						

SAMPLE DATA | TEST DATA

BORING LOG 8890.11P - DOGWOOD PARK.GPJ WKA.GDT 8/30/11 10:14 AM

WallaceKuhl & ASSOCIATES

FIGURE 5

Project: Dogwood Park
Project Location: Sacramento, California
WKA Number: 8890.11P

LOG OF SOIL BORING D4

Sheet 1 of 1

Date(s) Drilled	7/27/11	Logged By	MSM	Checked By	MSM
Drilling Method	Solid Stem Auger	Drilling Contractor	WKA	Total Depth of Drill Hole	5.0 feet
Drill Rig Type	Giddings	Diameter(s) of Hole, inches	4	Approx. Surface Elevation, ft MSL	
Groundwater Depth [Elevation], feet	Not Encountered	Sampling Method(s)	Open drive sampler with 6-inch sleeve	Drill Hole Backfill	Auger Cuttings
Remarks				Driving Method and Drop	80 lb hammer, 18 inch drop

ELEVATION, feet	DEPTH, feet	GRAPHIC LOG	ENGINEERING CLASSIFICATION AND DESCRIPTION	SAMPLE DATA: SAMPLE	SAMPLE NUMBER	NUMBER OF BLOWS	TEST DATA: MOISTURE CONTENT, %	DRY UNIT WEIGHT, pcf	ADDITIONAL TESTS
			Brown and light brown, sandy, silty clay (CL)						
			Brown, variably cemented, sandy silt with trace clay (ML)						
					D4-1		13.4	102	
	5		End of boring at ~5 feet below the ground surface. Groundwater was not encountered.						

WallaceKuhl & ASSOCIATES

FIGURE 6

BORING LOG 8890.11P - DOGWOOD PARK.GPJ WKA.GDT 8/30/11 3:48 PM

UNIFIED SOIL CLASSIFICATION SYSTEM

MAJOR DIVISIONS		SYMBOL	CODE	TYPICAL NAMES
COARSE GRAINED SOILS (More than 50% of soil > no. 200 sieve size)	GRAVELS (More than 50% of coarse fraction > no. 4 sieve size)	GW		Well graded gravels or gravel - sand mixtures, little or no fines
		GP		Poorly graded gravels or gravel - sand mixtures, little or no fines
		GM		Silty gravels, gravel - sand - silt mixtures
		GC		Clayey gravels, gravel - sand - clay mixtures
	SANDS (50% or more of coarse fraction < no. 4 sieve size)	SW		Well graded sands or gravelly sands, little or no fines
		SP		Poorly graded sands or gravelly sands, little or no fines
		SM		Silty sands, sand - silt mixtures
		SC		Clayey sands, sand - clay mixtures
FINE GRAINED SOILS (50% or more of soil < no. 200 sieve size)	SILTS & CLAYS LL < 50	ML		Inorganic silts and very fine sands, rock flour, silty or clayey fine sands or clayey silts with slight plasticity
		CL		Inorganic clays of low to medium plasticity, gravelly clays, sandy clays, silty clays, lean clays
		OL		Organic silts and organic silty clays of low plasticity
	SILTS & CLAYS LL ≥ 50	MH		Inorganic silts, micaceous or diatomaceous fine sandy or silty soils, elastic silts
		CH		Inorganic clays of high plasticity, fat clays
		OH		Organic clays of medium to high plasticity, organic silty clays, organic silts
HIGHLY ORGANIC SOILS		Pt		Peat and other highly organic soils
ROCK		RX		Rocks, weathered to fresh
FILL		FILL		Artificially placed fill material

OTHER SYMBOLS

= Drive Sample: 2-1/2" O.D. Modified California sampler

= Drive Sampler: no recovery

= SPT Sampler

= Initial Water Level

= Final Water Level

= Estimated or gradational material change line

= Observed material change line

Laboratory Tests

PI = Plasticity Index

EI = Expansion Index

UCC = Unconfined Compression Test

TR = Triaxial Compression Test

GR = Gradational Analysis (Sieve)

K = Permeability Test

GRAIN SIZE CLASSIFICATION

CLASSIFICATION	RANGE OF GRAIN SIZES	
	U.S. Standard Sieve Size	Grain Size in Millimeters
BOULDERS	Above 12"	Above 305
COBBLES	12" to 3"	305 to 76.2
GRAVEL	3" to No. 4	76.2 to 4.76
coarse (c)	3" to 3/4"	76.2 to 19.1
fine (f)	3/4" to No. 4	19.1 to 4.76
SAND	No. 4 to No. 200	4.76 to 0.074
coarse (c)	No. 4 to No. 10	4.76 to 2.00
medium (m)	No. 10 to No. 40	2.00 to 0.420
fine (f)	No. 40 to No. 200	0.420 to 0.074
SILT & CLAY	Below No. 200	Below 0.074

Wallace Kuhl & Associates

UNIFIED SOIL CLASSIFICATION SYSTEM

DOGWOOD PARK

Sacramento, California

FIGURE	7
DRAWN BY	TJC
CHECKED BY	MSM
PROJECT MGR	MSM
DATE	8/11

WKA NO. 8890.11P

EXPANSION INDEX TEST RESULTS

ASTM D4829

MATERIAL DESCRIPTION: Brown, silty clay

LOCATION: B1

Sample Depth	Pre-Test Moisture (%)	Post-Test Moisture (%)	Dry Density (pcf)	Expansion Index
0'-3'	16.0	32.0	93.5	**100**

CLASSIFICATION OF EXPANSIVE SOIL *

EXPANSION INDEX	POTENTIAL EXPANSION
0 - 20	Very Low
21 - 50	Low
51 - 90	Medium
91 - 130	**High**
Above 130	Very High

* From ASTM D4829, Table 1

WallaceKuhl & ASSOCIATES

EXPANSION INDEX TEST RESULTS

DOGWOOD PARK

Sacramento, California

FIGURE	8
DRAWN BY	TJC
CHECKED BY	MSM
PROJECT MGR	MSM
DATE	8/11

WKA NO. 8890.11P

RESISTANCE VALUE TEST RESULTS
(California Test 301)

MATERIAL DESCRIPTION: Brown, silty clay

LOCATION: B1 (0'-3')

Specimen No.	Dry Unit Weight (pcf)	Moisture @ Compaction (%)	Exudation Pressure (psi)	Expansion Pressure (dial)	Expansion Pressure (psf)	R Value
1	106	20.9	467	98	424	
2						
3						

Sample extruded, therefore R-Value = 5

WallaceKuhl & ASSOCIATES

RESISTANCE VALUE TEST RESULTS

DOGWOOD PARK

Sacramento, California

FIGURE	9
DRAWN BY	TJC
CHECKED BY	MSM
PROJECT MGR	MSM
DATE	8/11
WKA NO. 8890.11P	

Sunland Analytical
11353 Pyrites Way, Suite 4
Rancho Cordova, CA 95670
(916) 852-8557

Date Reported 08/17/2011
Date Submitted 08/11/2011

To: Matt Moyneur
Wallace-Kuhl & Assoc.
3050 Industrial Blvd.
West Sacramento, CA 95691

From: Gene Oliphant, Ph.D. \ Randy Horney
General Manager \ Lab Manager

The reported analysis was requested for the following location:
Location : 8890.11P-DOGWOOD PRK Site ID : B1 @ 0-3'.
Thank you for your business.

* For future reference to this analysis please use SUN # 60791-124572.

EVALUATION FOR SOIL CORROSION

Soil pH	7.68	
Minimum Resistivity	0.72 ohm-cm (x1000)	
Chloride	22.5 ppm	00.00225 %
Sulfate	35.9 ppm	00.00359 %

METHODS
pH and Min.Resistivity CA DOT Test #643
Sulfate CA DOT Test #417, Chloride CA DOT Test #422

WallaceKuhl & ASSOCIATES	CORROSION TEST RESULTS DOGWOOD PARK Sacramento, California	FIGURE 10 DRAWN BY TJC CHECKED BY MSM PROJECT MGR MSM DATE 8/11 WKA NO. 8890.11P

Scheduling EC-1

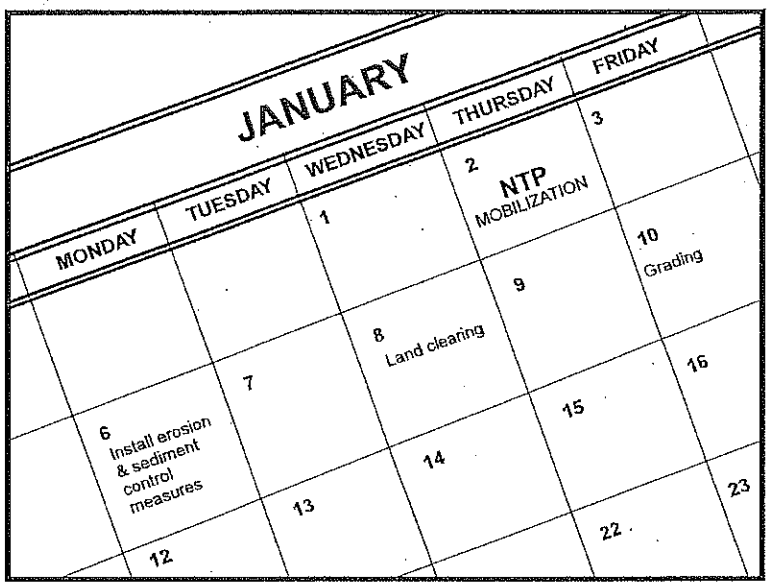

Categories

EC	Erosion Control	☑
SE	Sediment Control	☒
TC	Tracking Control	☒
WE	Wind Erosion Control	☒
NS	Non-Stormwater Management Control	
WM	Waste Management and Materials Pollution Control	

Legend:

☑ **Primary Objective**

☒ **Secondary Objective**

Targeted Constituents

Sediment	☑
Nutrients	
Trash	
Metals	
Bacteria	
Oil and Grease	
Organics	

Potential Alternatives

None

Description and Purpose

Scheduling is the development of a written plan that includes sequencing of construction activities and the implementation of BMPs such as erosion control and sediment control while taking local climate (rainfall, wind, etc.) into consideration. The purpose is to reduce the amount and duration of soil exposed to erosion by wind, rain, runoff, and vehicle tracking, and to perform the construction activities and control practices in accordance with the planned schedule.

Suitable Applications

Proper sequencing of construction activities to reduce erosion potential should be incorporated into the schedule of every construction project especially during rainy season. Use of other, more costly yet less effective, erosion and sediment control BMPs may often be reduced through proper construction sequencing.

Limitations

- Environmental constraints such as nesting season prohibitions reduce the full capabilities of this BMP.

Implementation

- Avoid rainy periods. Schedule major grading operations during dry months when practical. Allow enough time before rainfall begins to stabilize the soil with vegetation or physical means or to install sediment trapping devices.
- Plan the project and develop a schedule showing each phase

CASQA
CALIFORNIA STORMWATER QUALITY ASSOCIATION

of construction. Clearly show how the rainy season relates to soil disturbing and re-stabilization activities. Incorporate the construction schedule into the SWPPP.

- Include on the schedule, details on the rainy season implementation and deployment of:
  - Erosion control BMPs
  - Sediment control BMPs
  - Tracking control BMPs
  - Wind erosion control BMPs
  - Non-stormwater BMPs
  - Waste management and materials pollution control BMPs
- Include dates for activities that may require non-stormwater discharges such as dewatering, sawcutting, grinding, drilling, boring, crushing, blasting, painting, hydro-demolition, mortar mixing, pavement cleaning, etc.
- Work out the sequencing and timetable for the start and completion of each item such as site clearing and grubbing, grading, excavation, paving, foundation pouring utilities installation, etc., to minimize the active construction area during the rainy season.
  - Sequence trenching activities so that most open portions are closed before new trenching begins.
  - Incorporate staged seeding and re-vegetation of graded slopes as work progresses.
  - Schedule establishment of permanent vegetation during appropriate planting time for specified vegetation.
- Non-active areas should be stabilized as soon as practical after the cessation of soil disturbing activities or one day prior to the onset of precipitation.
- Monitor the weather forecast for rainfall.
- When rainfall is predicted, adjust the construction schedule to allow the implementation of soil stabilization and sediment treatment controls on all disturbed areas prior to the onset of rain.
- Be prepared year round to deploy erosion control and sediment control BMPs. Erosion may be caused during dry seasons by un-seasonal rainfall, wind, and vehicle tracking. Keep the site stabilized year round, and retain and maintain rainy season sediment trapping devices in operational condition.
- Apply permanent erosion control to areas deemed substantially complete during the project's defined seeding window.

Costs

Construction scheduling to reduce erosion may increase other construction costs due to reduced economies of scale in performing site grading. The cost effectiveness of scheduling techniques should be compared with the other less effective erosion and sedimentation controls to achieve a cost effective balance.

Scheduling EC-1

Inspection and Maintenance

- Verify that work is progressing in accordance with the schedule. If progress deviates, take corrective actions.
- Amend the schedule when changes are warranted.
- Amend the schedule prior to the rainy season to show updated information on the deployment and implementation of construction site BMPs.

References

Stormwater Quality Handbooks Construction Site Best Management Practices (BMPs) Manual, State of California Department of Transportation (Caltrans), November 2000.

Stormwater Management for Construction Activities Developing Pollution Prevention Plans and Best Management Practices (EPA 832-R-92-005), U.S. Environmental Protection Agency, Office of Water, September 1992.

Preservation Of Existing Vegetation EC-2

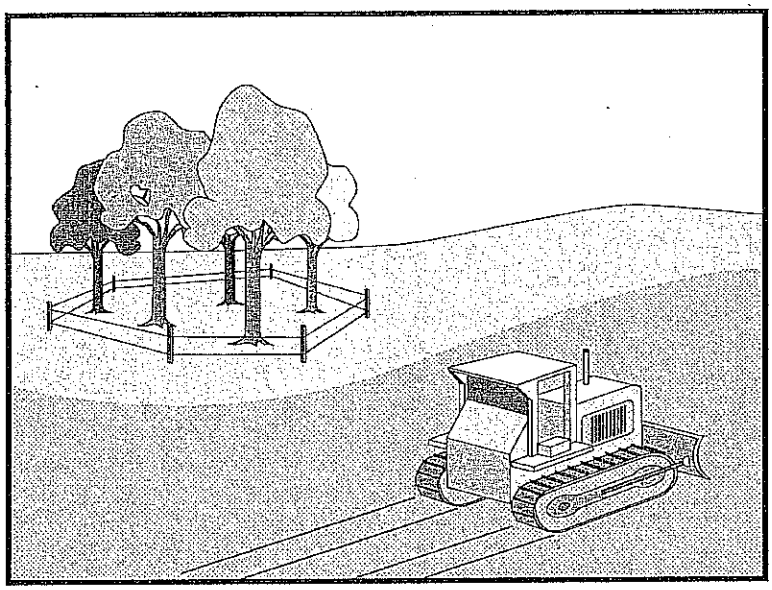

Categories

EC	Erosion Control	☑
SE	Sediment Control	
TC	Tracking Control	
WE	Wind Erosion Control	
NS	Non-Stormwater Management Control	
WM	Waste Management and Materials Pollution Control	

Legend:

☑ **Primary Objective**

☒ **Secondary Objective**

Targeted Constituents

Sediment	☑
Nutrients	
Trash	
Metals	
Bacteria	
Oil and Grease	
Organics	

Potential Alternatives

None

Description and Purpose

Carefully planned preservation of existing vegetation minimizes the potential of removing or injuring existing trees, vines, shrubs, and grasses that protect soil from erosion.

Suitable Applications

Preservation of existing vegetation is suitable for use on most projects. Large project sites often provide the greatest opportunity for use of this BMP. Suitable applications include the following:

- Areas within the site where no construction activity occurs, or occurs at a later date. This BMP is especially suitable to multi year projects where grading can be phased.
- Areas where natural vegetation exists and is designated for preservation. Such areas often include steep slopes, watercourse, and building sites in wooded areas.
- Areas where local, state, and federal government require preservation, such as vernal pools, wetlands, marshes, certain oak trees, etc. These areas are usually designated on the plans, or in the specifications, permits, or environmental documents.
- Where vegetation designated for ultimate removal can be temporarily preserved and be utilized for erosion control and sediment control.

Limitations

- Requires forward planning by the owner/developer,

Preservation Of Existing Vegetation EC-2

contractor, and design staff.

- Limited opportunities for use when project plans do not incorporate existing vegetation into the site design.
- For sites with diverse topography, it is often difficult and expensive to save existing trees while grading the site satisfactory for the planned development.

Implementation

The best way to prevent erosion is to not disturb the land. In order to reduce the impacts of new development and redevelopment, projects may be designed to avoid disturbing land in sensitive areas of the site (e.g., natural watercourses, steep slopes), and to incorporate unique or desirable existing vegetation into the site's landscaping plan. Clearly marking and leaving a buffer area around these unique areas during construction will help to preserve these areas as well as take advantage of natural erosion prevention and sediment trapping.

Existing vegetation to be preserved on the site must be protected from mechanical and other injury while the land is being developed. The purpose of protecting existing vegetation is to ensure the survival of desirable vegetation for shade, beautification, and erosion control. Mature vegetation has extensive root systems that help to hold soil in place, thus reducing erosion. In addition, vegetation helps keep soil from drying rapidly and becoming susceptible to erosion. To effectively save existing vegetation, no disturbances of any kind should be allowed within a defined area around the vegetation. For trees, no construction activity should occur within the drip line of the tree.

Timing

- Provide for preservation of existing vegetation prior to the commencement of clearing and grubbing operations or other soil disturbing activities in areas where no construction activity is planned or will occur at a later date.

Design and Layout

- Mark areas to be preserved with temporary fencing. Include sufficient setback to protect roots.
  - Orange colored plastic mesh fencing works well.
  - Use appropriate fence posts and adequate post spacing and depth to completely support the fence in an upright position.
- Locate temporary roadways, stockpiles, and layout areas to avoid stands of trees, shrubs, and grass.
- Consider the impact of grade changes to existing vegetation and the root zone.
- Maintain existing irrigation systems where feasible. Temporary irrigation may be required.
- Instruct employees and subcontractors to honor protective devices. Prohibit heavy equipment, vehicular traffic, or storage of construction materials within the protected area.

Preservation Of Existing Vegetation EC-2

Costs

There is little cost associated with preserving existing vegetation if properly planned during the project design, and these costs may be offset by aesthetic benefits that enhance property values. During construction, the cost for preserving existing vegetation will likely be less than the cost of applying erosion and sediment controls to the disturbed area. Replacing vegetation inadvertently destroyed during construction can be extremely expensive, sometimes in excess of $10,000 per tree.

Inspection and Maintenance

During construction, the limits of disturbance should remain clearly marked at all times. Irrigation or maintenance of existing vegetation should be described in the landscaping plan. If damage to protected trees still occurs, maintenance guidelines described below should be followed:

- Verify that protective measures remain in place. Restore damaged protection measures immediately.
- Serious tree injuries shall be attended to by an arborist.
- Damage to the crown, trunk, or root system of a retained tree shall be repaired immediately.
- Trench as far from tree trunks as possible, usually outside of the tree drip line or canopy. Curve trenches around trees to avoid large roots or root concentrations. If roots are encountered, consider tunneling under them. When trenching or tunneling near or under trees to be retained, place tunnels at least 18 in. below the ground surface, and not below the tree center to minimize impact on the roots.
- Do not leave tree roots exposed to air. Cover exposed roots with soil as soon as possible. If soil covering is not practical, protect exposed roots with wet burlap or peat moss until the tunnel or trench is ready for backfill.
- Cleanly remove the ends of damaged roots with a smooth cut.
- Fill trenches and tunnels as soon as possible. Careful filling and tamping will eliminate air spaces in the soil, which can damage roots.
- If bark damage occurs, cut back all loosened bark into the undamaged area, with the cut tapered at the top and bottom and drainage provided at the base of the wood. Limit cutting the undamaged area as much as possible.
- Aerate soil that has been compacted over a trees root zone by punching holes 12 in. deep with an iron bar, and moving the bar back and forth until the soil is loosened. Place holes 18 in. apart throughout the area of compacted soil under the tree crown.
- Fertilization
  - Fertilize stressed or damaged broadleaf trees to aid recovery.
  - Fertilize trees in the late fall or early spring.

Preservation Of Existing Vegetation EC-2

- Apply fertilizer to the soil over the feeder roots and in accordance with label instructions, but never closer than 3 ft to the trunk. Increase the fertilized area by one-fourth of the crown area for conifers that have extended root systems.

- Retain protective measures until all other construction activity is complete to avoid damage during site cleanup and stabilization.

References

County of Sacramento Tree Preservation Ordinance, September 1981.

Stormwater Quality Handbooks Construction Site Best Management Practices (BMPs) Manual, State of California Department of Transportation (Caltrans), November 2000.

Stormwater Management of the Puget Sound Basin, Technical Manual, Publication #91-75, Washington State Department of Ecology, February 1992.

Water Quality Management Plan for The Lake Tahoe Region, Volume II, Handbook of Management Practices, Tahoe Regional Planning Agency, November 1988.

Hydraulic Mulch

EC-3

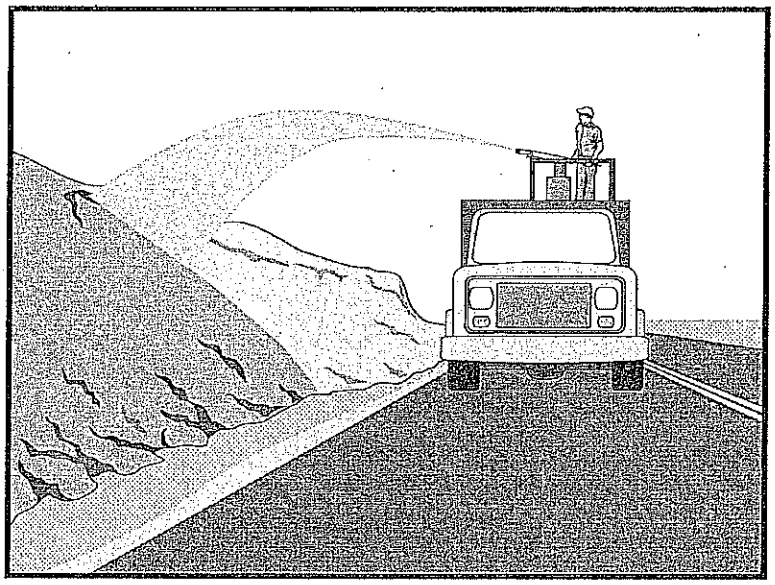

Categories		
EC	Erosion Control	☑
SE	Sediment Control	
TC	Tracking Control	
WE	Wind Erosion Control	☒
NS	Non-Stormwater Management Control	
WM	Waste Management and Materials Pollution Control	

Legend:

☑ **Primary Category**

☒ **Secondary Category**

Targeted Constituents	
Sediment	☑
Nutrients	
Trash	
Metals	
Bacteria	
Oil and Grease	
Organics	

Potential Alternatives

EC-4 Hydroseeding

EC-5 Soil Binders

EC-6 Straw Mulch

EC-7 Geotextiles and Mats

EC-8 Wood Mulching

EC-14 Compost Blanket

EC-16 Non-Vegetative Stabilization

Description and Purpose

Hydraulic Mulch consists of various types of fibrous materials mixed with water and sprayed onto the soil surface in slurry form to provide a layer of temporary protection from wind and water erosion.

Suitable Applications

Hydraulic mulch as a temporary, stand alone, erosion control BMP is suitable for disturbed areas that require temporary protection from wind and water erosion until permanent soil stabilization activities commence. Examples include:

- Rough-graded areas that will remain inactive for longer than permit-required thresholds (e.g., 14 days) or otherwise require stabilization to minimize erosion or prevent sediment discharges.
- Soil stockpiles.
- Slopes with exposed soil between existing vegetation such as trees or shrubs.
- Slopes planted with live, container-grown vegetation or plugs.
- Slopes burned by wildfire.

Hydraulic mulch can also be applied to augment other erosion control BMPs such as:

Hydraulic Mulch EC-3

- In conjunction with straw mulch (see EC-6 Straw Mulch) where the rate of hydraulic mulch is reduced to 100-500 lbs per acre and the slurry is applied over the straw as a tackifying agent to hold the straw in place.
- Supplemental application of soil amendments, such as fertilizer, lime, gypsum, soil bio-stimulants or compost.

Limitations

In general, hydraulic mulch is not limited by slope length, gradient or soil type. However, the following limitations typically apply:

- Most hydraulic mulch applications, particularly bonded fiber matrices (BFMs), require at least 24 hours to dry before rainfall occurs.
- Temporary applications (i.e., without a vegetative component) may require a second application in order to remain effective for an entire rainy season.
- Treatment areas must be accessible to hydraulic mulching equipment.
- Availability of water sources in remote areas for mixing and application.
- As a stand-alone temporary BMP, hydraulic mulches may need to be re-applied to maintain their erosion control effectiveness, typically after 6-12 months depending on the type of mulch used.
- Availability of hydraulic mulching equipment may be limited just prior to the rainy season and prior to storms due to high demand.
- Cellulose fiber mulches alone may not perform well on steep slopes or in course soils.

Implementation

- Where feasible, it is preferable to prepare soil surfaces prior to application by roughening embankments and fill areas with a crimping or punching type roller or by track walking.
- The majority of hydraulic mulch applications do not necessarily require surface/soil preparation (See EC-15 Soil Preparation) although in almost every case where re-vegetation is included as part of the practice, soil preparation can be beneficial. One of the advantages of hydraulic mulch over other erosion control methods is that it can be applied in areas where soil preparation is precluded by site conditions, such as steep slopes, rocky soils, or inaccessibility.
- Avoid mulch over spray onto roads, sidewalks, drainage channels, existing vegetation, etc.
- Hydraulic mulching is generally performed utilizing specialized machines that have a large water-holding/mixing tank and some form of mechanical agitation or other recirculation method to keep water, mulch and soil amendments in suspension. The mixed hydraulic slurry can be applied from a tower sprayer on top of the machine or by extending a hose to areas remote from the machine.

- Where possible apply hydraulic mulch from multiple directions to adequately cover the soil. Application from a single direction can result in shadowing, uneven coverage and failure of the BMP.
- Hydraulic mulch can also include a vegetative component, such as seed, rhizomes, or stolons (see EC-4 Hydraulic Seed).
- Typical hydraulic mulch application rates range from 2,000 pounds per acre for standard mulches (SMs) to 3,500 pounds per acre for BFMs. However, the required amount of hydraulic mulch to provide adequate coverage of exposed topsoil may appear to exceed the standard rates when the roughness of the soil surface is changed due to soil preparation methods (see EC-15 Soil Preparation) or by slope gradient.
- Other factors such as existing soil moisture and soil texture can have a profound effect on the amount of hydraulic mulch required (i.e. application rate) applied to achieve an erosion-resistant covering.
- Avoid use of mulch without a tackifier component, especially on slopes.
- Mulches used in the hydraulic mulch slurry can include:
  - Cellulose fiber
  - Thermally-processed wood fibers
  - Cotton
  - Synthetics
  - Compost (see EC-14, Compost Blanket)
- Additional guidance on the comparison and selection of temporary slope stabilization methods is provided in Appendix F of the Handbook.

Categories of Hydraulic Mulches

Standard Hydraulic Mulch (SM)

Standard hydraulic mulches are generally applied at a rate of 2,000 pounds per acre and are manufactured containing around 5% tackifier (i.e. soil binder), usually a plant-derived guar or psyllium type. Most standard mulches are green in color derived from food-color based dyes.

Hydraulic Matrices (HM) and Stabilized Fiber Matrices (SFM)

Hydraulic matrices and stabilized fiber matrices are slurries which contain increased levels of tackifiers/soil binders; usually 10% or more by weight. HMs and SFMs have improved performance compared to a standard hydraulic mulch (SM) because of the additional percentage of tackifier and because of their higher application rates, typically 2,500 – 4,000 pounds per acre. Hydraulic matrices can include a mixture of fibers, for example, a 50/50 blend of paper and wood fiber. In the case of an SFM, the tackifier/soil binder is specified as a polyacrylamide (PAM).

Bonded Fiber Matrix (BFM)

Bonded fiber matrices (BFMs) are hydraulically-applied systems of fibers, adhesives (typically guar based) and chemical cross-links. Upon drying, the slurry forms an erosion-resistant blanket that prevents soil erosion and promotes vegetation establishment. The cross-linked adhesive in the BFM should be biodegradable and should not dissolve or disperse upon re-wetting. BFMs are typically applied at rates from 3,000 to 4,000 lbs/acre based on the manufacturer's recommendation. BFMs should not be applied immediately before, during or immediately after rainfall or if the soil is saturated. Depending on the product, BFMs typically require 12 to 24 hours to dry and become effective.

Mechanically-Bonded Fiber Matrices (MBFM)

Mechanically-bonded fiber matrices (MBFMs) are hydraulically applied systems similar to BFM that use crimped synthetic fibers and PAM and are typically applied to a slope at a higher application rate than a standard BFM.

Hydraulic Compost Matrix (HCM)

Hydraulic compost matrix (HCM) is a field-derived practice whereby finely graded or sifted compost is introduced into the hydraulic mulch slurry. A guar-type tackifier can be added for steeper slope applications as well as any specified seed mixtures. A HCM can help to accelerate seed germination and growth. HCMs are particularly useful as an in-fill for three-dimensional re-vegetation geocomposites, such as turf reinforcement mats (TRM) (see EC-7 Geotextiles and Mats).

Costs

Average installed costs for hydraulic mulch categories are is provided in Table 1, below.

Table 1
HYDRAULIC MULCH BMPs
INSTALLED COSTS

BMP	Installed Cost/Acre
Standard Hydraulic Mulching (SM)	$1,700 - $3,600 per acre
Hydraulic Matrices (HM) and Stabilized Fiber Matrices	
Guar-based	$2,000 - $4,000 per acre
PAM-based	$2,500 - $5,610 per acre
Bonded Fiber Matrix (BFM)	$3,900 - $6,900 per acre
Mechanically Bonded Fiber Matrix (MBFM)	$4,500 - $6,000 per acre
Hydraulic Compost Matrix (HCM)	$3,000 - $3,500 per acre

Source: Caltrans Soil Stabilization BMP Research for Erosion and Sediment Controls, July 2007

Inspection and Maintenance

- Maintain an unbroken, temporary mulched ground cover throughout the period of construction when the soils are not being reworked.
- BMPs must be inspected in accordance with General Permit requirements for the associated project type and risk level. It is recommended that at a minimum, BMPs be inspected

weekly, prior to forecasted rain events, daily during extended rain events, and after the conclusion of rain events.

- Areas where erosion is evident should be repaired and BMPs re-applied as soon as possible. Care should be exercised to minimize the damage to protected areas while making repairs, as any area damaged will require re-application of BMPs.
- Compare the number of bags or weight of applied mulch to the area treated to determine actual application rates and compliance with specifications.

References

Soil Stabilization BMP Research for Erosion and Sediment Controls: Cost Survey Technical Memorandum, State of California Department of Transportation (Caltrans), July 2007.

Controlling Erosion of Construction Sites, Agricultural Information #347, U.S. Department of Agriculture (USDA), Natural Resources Conservation Service (NRCS) (formerly Soil Conservation Service – SCS).

Guides for Erosion and Sediment Control in California, USDA Soils Conservation Service, January 1991.

Manual of Standards of Erosion and Sediment Control Measures, Association of Bay Area Governments, May 1995.

Sedimentation and Erosion Control, An Inventory of Current Practices Draft, US EPA, April 1990.

Soil Erosion by Water, Agriculture Information Bulletin #513, U.S. Department of Agriculture, Soil Conservation Service.

Stormwater Quality Handbooks Construction Site Best Management Practices (BMPs) Manual, State of California Department of Transportation (Caltrans), March 2003.

Guidance Document: Soil Stabilization for Temporary Slopes, State of California Department of Transportation (Caltrans), November 1999

Stormwater Management of the Puget Sound Basin, Technical Manual, Publication #91-75, Washington State Department of Ecology, February 1992.

Water Quality Management Plan for the Lake Tahoe Region, Volume II, Handbook of Management Practices, Tahoe Regional Planning Agency, November 1988.

Hydroseeding EC-4

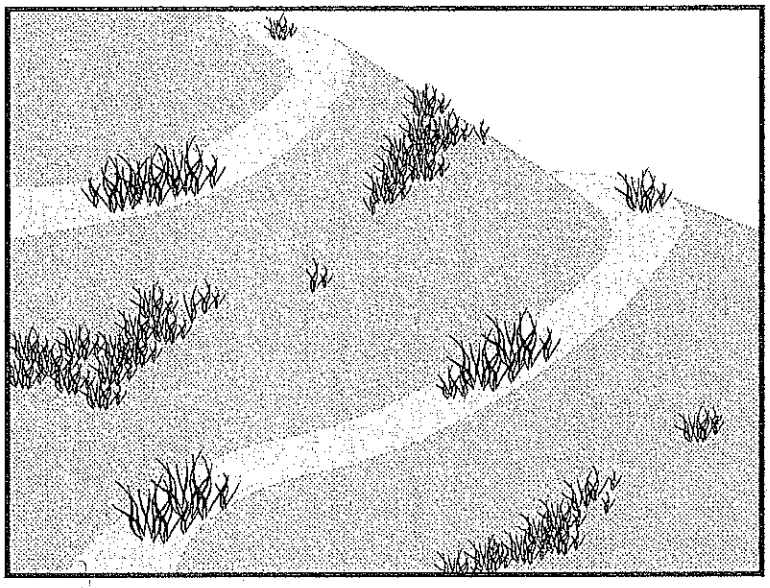

Categories

EC	Erosion Control	☑
SE	Sediment Control	
TC	Tracking Control	
WE	Wind Erosion Control	☒
NS	Non-Stormwater Management Control	
WM	Waste Management and Materials Pollution Control	

Legend:

☑ **Primary Category**

☒ **Secondary Category**

Targeted Constituents

Sediment	☑
Nutrients	
Trash	
Metals	
Bacteria	
Oil and Grease	
Organics	

Potential Alternatives

EC-3 Hydraulic Mulch

EC-5 Soil Binders

EC-6 Straw Mulch

EC-7 Geotextiles and Mats

EC-8 Wood Mulching

EC-14 Compost Blanket

EC-16 Non-Vegetative Stabilization

Description and Purpose

Hydroseeding typically consists of applying a mixture of a hydraulic mulch, seed, fertilizer, and stabilizing emulsion with a hydraulic mulcher, to temporarily protect exposed soils from erosion by water and wind. Hydraulic seeding, or hydroseeding, is simply the method by which temporary or permanent seed is applied to the soil surface.

Suitable Applications

Hydroseeding is suitable for disturbed areas requiring temporary protection until permanent stabilization is established, for disturbed areas that will be re-disturbed following an extended period of inactivity, or to apply permanent stabilization measures. Hydroseeding without mulch or other cover (e.g. EC-7, Erosion Control Blanket) is not a stand-alone erosion control BMP and should be combined with additional measures until vegetation establishment.

Typical applications for hydroseeding include:

- Disturbed soil/graded areas where permanent stabilization or continued earthwork is not anticipated prior to seed germination.
- Cleared and graded areas exposed to seasonal rains or temporary irrigation.
- Areas not subject to heavy wear by construction equipment or high traffic.

Hydroseeding EC-4

Limitations

- Availability of hydroseeding equipment may be limited just prior to the rainy season and prior to storms due to high demand.
- Hydraulic seed should be applied with hydraulic mulch or a stand-alone hydroseed application should be followed by one of the following:
  - Straw mulch (see Straw Mulch EC-6)
  - Rolled erosion control products (see Geotextiles and Mats EC-7)
  - Application of Compost Blanket (see Compost Blanket EC-14)

  Hydraulic seed may be used alone only on small flat surfaces when there is sufficient time in the season to ensure adequate vegetation establishment and coverage to provide adequate erosion control.
- Hydraulic seed without mulch does not provide immediate erosion control.
- Temporary seeding may not be appropriate for steep slopes (i.e., slopes readily prone to rill erosion or without sufficient topsoil).
- Temporary seeding may not be appropriate in dry periods without supplemental irrigation.
- Temporary vegetation may have to be removed before permanent vegetation is applied.
- Temporary vegetation may not be appropriate for short term inactivity (i.e. less than 3-6 months).

Implementation

In order to select appropriate hydraulic seed mixtures, an evaluation of site conditions should be performed with respect to:

- Soil conditions
- Site topography and exposure (sun/wind)
- Season and climate
- Vegetation types
- Maintenance requirements
- Sensitive adjacent areas
- Water availability
- Plans for permanent vegetation

The local office of the U.S.D.A. Natural Resources Conservation Service (NRCS) is an excellent source of information on appropriate seed mixes.

The following steps should be followed for implementation:

- Where appropriate or feasible, soil should be prepared to receive the seed by disking or otherwise scarifying (See EC-15, Soil Preparation) the surface to eliminate crust, improve air and water infiltration and create a more favorable environment for germination and growth.

- Avoid use of hydraulic seed in areas where the BMP would be incompatible with future earthwork activities.
- Hydraulic seed can be applied using a multiple step or one step process.
  - In a multiple step process, hydraulic seed is applied first, followed by mulch or a Rolled Erosion Control Product (RECP).
  - In the one step process, hydraulic seed is applied with hydraulic mulch in a hydraulic matrix. When the one step process is used to apply the mixture of fiber, seed, etc., the seed rate should be increased to compensate for all seeds not having direct contact with the soil.
- All hydraulically seeded areas should have mulch, or alternate erosion control cover to keep seeds in place and to moderate soil moisture and temperature until the seeds germinate and grow.
- All seeds should be in conformance with the California State Seed Law of the Department of Agriculture. Each seed bag should be delivered to the site sealed and clearly marked as to species, purity, percent germination, dealer's guarantee, and dates of test. The container should be labeled to clearly reflect the amount of Pure Live Seed (PLS) contained. All legume seed should be pellet inoculated. Inoculant sources should be species specific and should be applied at a rate of 2 lb of inoculant per 100 lb seed.
- Commercial fertilizer should conform to the requirements of the California Food and Agricultural Code, which can be found at http://www.leginfo.ca.gov/.html/fac_table_of_contents.html. Fertilizer should be pelleted or granular form.
- Follow up applications should be made as needed to cover areas of poor coverage or germination/vegetation establishment and to maintain adequate soil protection.
- Avoid over spray onto roads, sidewalks, drainage channels, existing vegetation, etc.
- Additional guidance on the comparison and selection of temporary slope stabilization methods is provided in Appendix F of the Handbook.

Costs

Average cost for installation and maintenance may vary from as low as $1,900 per acre for flat slopes and stable soils, to $4,000 per acre for moderate to steep slopes and/or erosive soils. Cost of seed mixtures vary based on types of required vegetation.

BMP	Installed Cost per Acre
Hydraulic Seed	$1,900-$4,000

Source: Caltrans Soil Stabilization BMP Research for Erosion and Sediment Controls, July 2007

Hydroseeding EC-4

Inspection and Maintenance

- BMPs must be inspected in accordance with General Permit requirements for the associated project type and risk level. It is recommended that at a minimum, BMPs be inspected weekly, prior to forecasted rain events, daily during extended rain events, and after the conclusion of rain events.
- Areas where erosion is evident should be repaired and BMPs re-applied as soon as possible. Care should be exercised to minimize the damage to protected areas while making repairs, as any area damaged will require re-application of BMPs.
- Where seeds fail to germinate, or they germinate and die, the area must be re-seeded, fertilized, and mulched within the planting season, using not less than half the original application rates.
- Irrigation systems, if applicable, should be inspected daily while in use to identify system malfunctions and line breaks. When line breaks are detected, the system must be shut down immediately and breaks repaired before the system is put back into operation.
- Irrigation systems should be inspected for complete coverage and adjusted as needed to maintain complete coverage.

References

Soil Stabilization BMP Research for Erosion and Sediment Controls: Cost Survey Technical Memorandum, State of California Department of Transportation (Caltrans), July 2007.

Stormwater Quality Handbooks Construction Site Best Management Practices (BMPs) Manual, State of California Department of Transportation (Caltrans), March 2003.

Guidance Document: Soil Stabilization for Temporary Slopes, State of California Department of Transportation (Caltrans), November 1999.

Earth Dikes and Drainage Swales EC-9

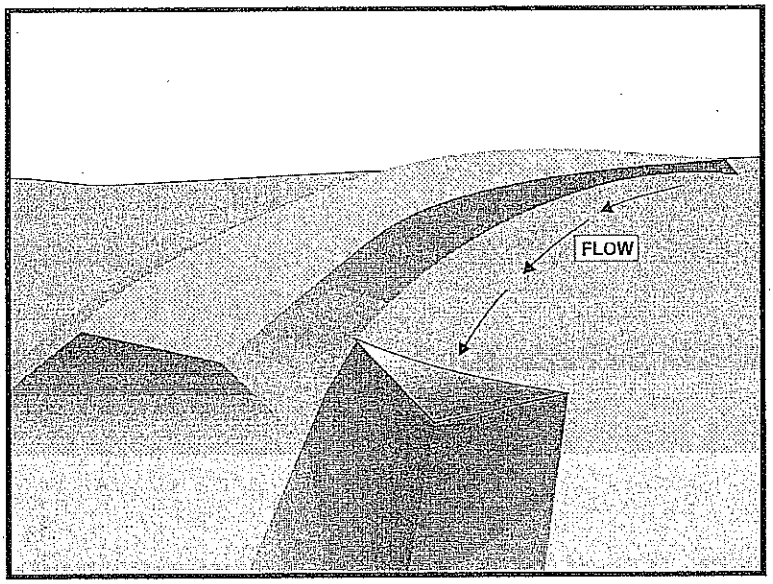

Categories

EC	Erosion Control	☑
SE	Sediment Control	
TC	Tracking Control	
WE	Wind Erosion Control	
NS	Non-Stormwater Management Control	
WM	Waste Management and Materials Pollution Control	

Legend:

☑ **Primary Objective**

☒ **Secondary Objective**

Targeted Constituents

Sediment	☑
Nutrients	
Trash	
Metals	
Bacteria	
Oil and Grease	
Organics	

Potential Alternatives

None

Description and Purpose

An earth dike is a temporary berm or ridge of compacted soil used to divert runoff or channel water to a desired location. A drainage swale is a shaped and sloped depression in the soil surface used to convey runoff to a desired location. Earth dikes and drainage swales are used to divert off site runoff around the construction site, divert runoff from stabilized areas and disturbed areas, and direct runoff into sediment basins or traps.

Suitable Applications

Earth dikes and drainage swales are suitable for use, individually or together, where runoff needs to be diverted from one area and conveyed to another.

- Earth dikes and drainage swales may be used:
  - To convey surface runoff down sloping land
  - To intercept and divert runoff to avoid sheet flow over sloped surfaces
  - To divert and direct runoff towards a stabilized watercourse, drainage pipe or channel
  - To intercept runoff from paved surfaces
  - Below steep grades where runoff begins to concentrate
  - Along roadways and facility improvements subject to flood drainage

- At the top of slopes to divert runon from adjacent or undisturbed slopes
- At bottom and mid slope locations to intercept sheet flow and convey concentrated flows
- Divert sediment laden runoff into sediment basins or traps

Limitations

Dikes should not be used for drainage areas greater than 10 acres or along slopes greater than 10 percent. For larger areas more permanent drainage structures should be built. All drainage structures should be built in compliance with local municipal requirements.

- Earth dikes may create more disturbed area on site and become barriers to construction equipment.
- Earth dikes must be stabilized immediately, which adds cost and maintenance concerns.
- Diverted stormwater may cause downstream flood damage.
- Dikes should not be constructed of soils that may be easily eroded.
- Regrading the site to remove the dike may add additional cost.
- Temporary drains and swales or any other diversion of runoff should not adversely impact upstream or downstream properties.
- Temporary drains and swales must conform to local floodplain management requirements.
- Earth dikes/drainage swales are not suitable as sediment trapping devices.
- It may be necessary to use other soil stabilization and sediment controls such as check dams, plastics, and blankets, to prevent scour and erosion in newly graded dikes, swales, and ditches.
- Sediment accumulation, scour depressions, and/or persistent non-stormwater discharges can result in areas of standing water suitable for mosquito production in drainage swales.

Implementation

The temporary earth dike is a berm or ridge of compacted soil, located in such a manner as to divert stormwater to a sediment trapping device or a stabilized outlet, thereby reducing the potential for erosion and offsite sedimentation. Earth dikes can also be used to divert runoff from off site and from undisturbed areas away from disturbed areas and to divert sheet flows away from unprotected slopes.

An earth dike does not itself control erosion or remove sediment from runoff. A dike prevents erosion by directing runoff to an erosion control device such as a sediment trap or directing runoff away from an erodible area. Temporary diversion dikes should not adversely impact adjacent properties and must conform to local floodplain management regulations, and should not be used in areas with slopes steeper than 10%.

Slopes that are formed during cut and fill operations should be protected from erosion by runoff. A combination of a temporary drainage swale and an earth dike at the top of a slope can divert

runoff to a location where it can be brought to the bottom of the slope (see EC-11, Slope Drains). A combination dike and swale is easily constructed by a single pass of a bulldozer or grader and compacted by a second pass of the tracks or wheels over the ridge. Diversion structures should be installed when the site is initially graded and remain in place until post construction BMPs are installed and the slopes are stabilized.

Diversion practices concentrate surface runoff, increasing its velocity and erosive force. Thus, the flow out of the drain or swale must be directed onto a stabilized area or into a grade stabilization structure. If significant erosion will occur, a swale should be stabilized using vegetation, chemical treatment, rock rip-rap, matting, or other physical means of stabilization. Any drain or swale that conveys sediment laden runoff must be diverted into a sediment basin or trap before it is discharged from the site.

General

- Care must be applied to correctly size and locate earth dikes, drainage swales. Excessively steep, unlined dikes, and swales are subject to erosion and gully formation.
- Conveyances should be stabilized.
- Use a lined ditch for high flow velocities.
- Select flow velocity based on careful evaluation of the risks due to erosion of the measure, soil types, overtopping, flow backups, washout, and drainage flow patterns for each project site.
- Compact any fills to prevent unequal settlement.
- Do not divert runoff onto other property without securing written authorization from the property owner.
- When possible, install and utilize permanent dikes, swales, and ditches early in the construction process.
- Provide stabilized outlets.

Earth Dikes

Temporary earth dikes are a practical, inexpensive BMP used to divert stormwater runoff. Temporary diversion dikes should be installed in the following manner:

- All dikes should be compacted by earth moving equipment.
- All dikes should have positive drainage to an outlet.
- All dikes should have 2:1 or flatter side slopes, 18 in. minimum height, and a minimum top width of 24 in. Wide top widths and flat slopes are usually needed at crossings for construction traffic.
- The outlet from the earth dike must function with a minimum of erosion. Runoff should be conveyed to a sediment trapping device such as a Sediment Trap (SE-3) or Sediment Basin

(SE-2) when either the dike channel or the drainage area above the dike are not adequately stabilized.

- Temporary stabilization may be achieved using seed and mulching for slopes less than 5% and either rip-rap or sod for slopes in excess of 5%. In either case, stabilization of the earth dike should be completed immediately after construction or prior to the first rain.
- If riprap is used to stabilize the channel formed along the toe of the dike, the following typical specifications apply:

Channel Grade	Riprap Stabilization
0.5-1.0%	4 in. Rock
1.1-2.0%	6 in. Rock
2.1-4.0%	8 in. Rock
4.1-5.0%	8 in. -12 in. Riprap

- The stone riprap, recycled concrete, etc. used for stabilization should be pressed into the soil with construction equipment.
- Filter cloth may be used to cover dikes in use for long periods.
- Construction activity on the earth dike should be kept to a minimum.

Drainage Swales

Drainage swales are only effective if they are properly installed. Swales are more effective than dikes because they tend to be more stable. The combination of a swale with a dike on the downhill side is the most cost effective diversion.

Standard engineering design criteria for small open channel and closed conveyance systems should be used (see the local drainage design manual). Unless local drainage design criteria state otherwise, drainage swales should be designed as follows:

- No more than 5 acres may drain to a temporary drainage swale.
- Place drainage swales above or below, not on, a cut or fill slope.
- Swale bottom width should be at least 2 ft
- Depth of the swale should be at least 18 in.
- Side slopes should be 2:1 or flatter.
- Drainage or swales should be laid at a grade of at least 1 percent, but not more than 15 percent.
- The swale must not be overtopped by the peak discharge from a 10-year storm, irrespective of the design criteria stated above.

- Remove all trees, stumps, obstructions, and other objectionable material from the swale when it is built.
- Compact any fill material along the path of the swale.
- Stabilize all swales immediately. Seed and mulch swales at a slope of less than 5 percent, and use rip-rap or sod for swales with a slope between 5 and 15 percent. For temporary swales, geotextiles and mats (EC-7) may provide immediate stabilization.
- Irrigation may be required to establish sufficient vegetation to prevent erosion.
- Do not operate construction vehicles across a swale unless a stabilized crossing is provided.
- Permanent drainage facilities must be designed by a professional engineer (see the local drainage design criteria for proper design).
- At a minimum, the drainage swale should conform to predevelopment drainage patterns and capacities.
- Construct the drainage swale with a positive grade to a stabilized outlet.
- Provide erosion protection or energy dissipation measures if the flow out of the drainage swale can reach an erosive velocity.

Costs

- Cost ranges from $15 to $55 per ft for both earthwork and stabilization and depends on availability of material, site location, and access.
- Small dikes: $2.50 - $6.50/linear ft; Large dikes: $2.50/yd^3.
- The cost of a drainage swale increases with drainage area and slope. Typical swales for controlling internal erosion are inexpensive, as they are quickly formed during routine earthwork.

Inspection and Maintenance

- Inspect BMPs prior to forecast rain, daily during extended rain events, after rain events, weekly during the rainy season, and at two-week intervals during the non-rainy season.
- Inspect BMPs subject to non-stormwater discharges daily while non-stormwater discharges occur.
- Inspect ditches and berms for washouts. Replace lost riprap, damaged linings or soil stabilizers as needed.
- Inspect channel linings, embankments, and beds of ditches and berms for erosion and accumulation of debris and sediment. Remove debris and sediment and repair linings and embankments as needed.
- Temporary conveyances should be completely removed as soon as the surrounding drainage area has been stabilized or at the completion of construction

References

Erosion and Sediment Control Handbook, S.J. Goldman, K. Jackson, T.A. Bursetynsky, P.E., McGraw Hill Book Company, 1986.

Manual of Standards of Erosion and Sediment Control Measures, Association of Bay Area Governments, May 1995.

Metzger, M.E. 2004. Managing mosquitoes in stormwater treatment devices. University of California Division of Agriculture and Natural Resources, Publication 8125. On-line: http://anrcatalog.ucdavis.edu/pdf/8125.pdf

National Association of Home Builders (NAHB). Stormwater Runoff & Nonpoint Source Pollution Control Guide for Builders and Developers. National Association of Home Builders, Washington, D.C., 1995

National Management Measures to Control Nonpoint Source Pollution from Urban Areas, United States Environmental Protection Agency, 2002.

Southeastern Wisconsin Regional Planning Commission (SWRPC). Costs of Urban Nonpoint Source Water Pollution Control Measures. Technical Report No. 31. Southeastern Wisconsin Regional Planning Commission, Waukesha, WI. 1991

Stormwater Quality Handbooks Construction Site Best Management Practices (BMPs) Manual, State of California Department of Transportation (Caltrans), November 2000.

Stormwater Management of the Puget Sound Basin, Technical Manual, Publication #91-75, Washington State Department of Ecology, February 1992.

Water Quality Management Plan for the Lake Tahoe Region, Volume II, Handbook of Management Practices, Tahoe Regional Planning Agency, November 1988.

Earth Dikes and Drainage Swales EC-9

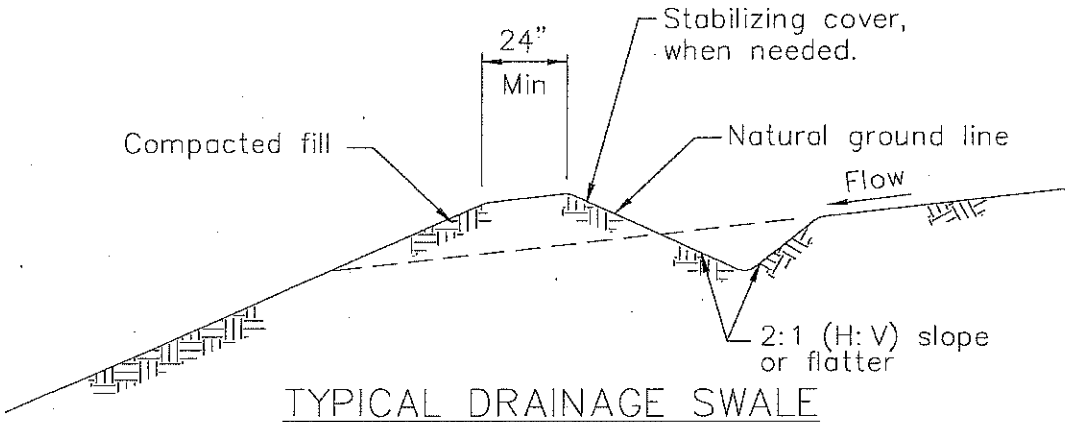

TYPICAL DRAINAGE SWALE
NOT TO SCALE

NOTES:

1. Stabilize inlet, outlets and slopes.
2. Properly compact the subgrade.

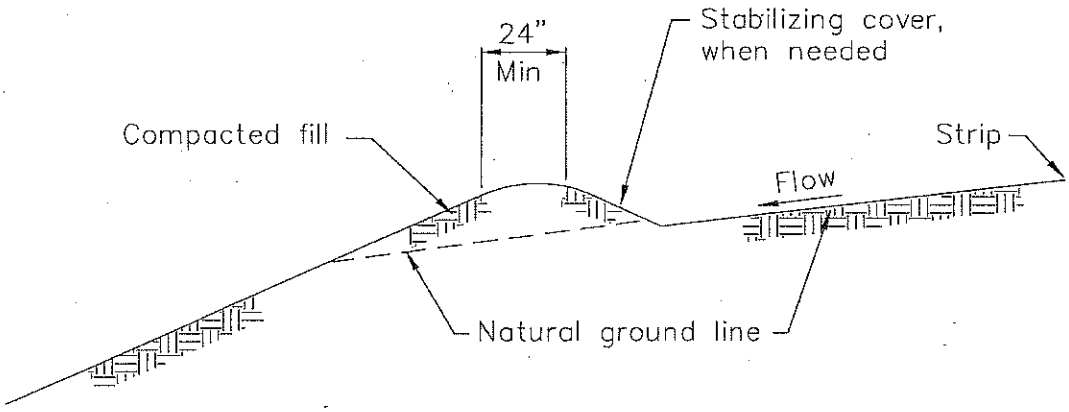

TYPICAL EARTH DIKE
NOT TO SCALE

Soil Preparation/Roughening EC-15

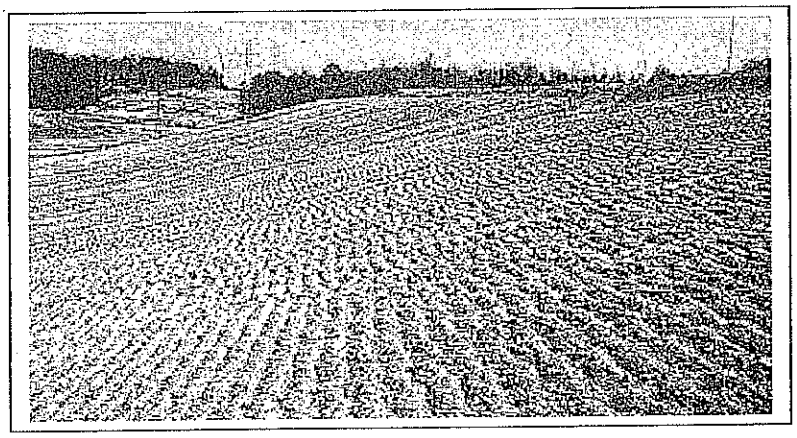

Description and Purpose

Soil Preparation/Roughening involves assessment and preparation of surface soils for BMP installation. This can include soil testing (for seed base, soil characteristics, or nutrients), as well as roughening surface soils by mechanical methods (including sheepsfoot rolling, track walking, scarifying, stair stepping, and imprinting) to prepare soil for additional BMPs, or to break up sheet flow. Soil Preparation can also involve tilling topsoil to prepare a seed bed and/or incorporation of soil amendments, to enhance vegetative establishment.

Suitable Applications

Soil preparation: Soil preparation is essential to proper vegetative establishment. In particular, soil preparation (i.e. tilling, raking, and amendment) is suitable for use in combination with any soil stabilization method, including RECPs or sod. Soil preparation should not be confused with roughening.

Roughening: Soil roughening is generally referred to as track walking (sometimes called imprinting) a slope, where treads from heavy equipment run parallel to the contours of the slope and act as mini terraces. Soil preparation is most effective when used in combination with erosion controls. Soil Roughening is suitable for use as a complementary process for controlling erosion on a site. Roughening is not intended to be used as a stand-alone BMP, and should be used with perimeter controls, additional erosion control measures, grade breaks, and vegetative establishment for maximum effectiveness. Roughening is intended to only affect surface soils and should not compromise slope stability or overall compaction. Suitable applications for soil roughening include:

Categories

EC	Erosion Control	☑
SE	Sediment Control	☒
TC	Tracking Control	
WE	Wind Erosion Control	
NS	Non-Stormwater Management Control	
WM	Waste Management and Materials Pollution Control	

Legend:

☑ **Primary Category**

☒ **Secondary Category**

Targeted Constituents

Sediment	☑
Nutrients	
Trash	
Metals	
Bacteria	
Oil and Grease	
Organics	

Potential Alternatives

EC-3 Hydraulic Mulch

EC-5 Soil Binders

EC-7 Geotextiles and Mats

CASQA
CALIFORNIA STORMWATER QUALITY ASSOCIATION

- Along any disturbed slopes, including temporary stockpiles, sediment basins, or compacted soil diversion berms and swales.
- Roughening should be used in combination with hydraulically applied stabilization methods, compost blanket, or straw mulch; but should not be used in combination with RECPs or sod because roughening is intended to leave terraces on the slope.

Limitations

- Preparation and roughening must take place prior to installing other erosion controls (such as hydraulically applied stabilizers) or sediment controls (such as fiber rolls) on the faces of slopes.
- In such cases where slope preparation is minimal, erosion control/revegetation BMPs that do not require extensive soil preparation - such as hydraulic mulching and seeding applications - should be employed.
- Consideration should be given to the type of erosion control BMP that follows surface preparation, as some BMPs are not designed to be installed over various types of tillage/roughening, i.e., RECPs (erosion control blankets) should not be used with soil roughening due to a "bridging" effect, which suspends the blanket above the seed bed.
- Surface roughness has an effect on the amount of mulch material that needs to be applied, which shows up as a general increase in mulch material due to an increase in surface area (Topographic Index -see EC-3 Hydraulic Mulching).

Implementation

- Additional guidance on the comparison and selection of temporary slope stabilization methods is provided in Appendix F of the Handbook.

General

A roughened surface can significantly reduce erosion. Based on tests done at the San Diego State Erosion Research Laboratory, various roughening techniques on slopes can result in a 12 - 76% reduction in the erosion rate versus smooth slopes.

Materials

Minimal materials are required unless amendments and/or seed are added to the soil. The majority of soil roughening/preparation can be done with equipment that is on hand at a normal construction site, such as bull dozers and compaction equipment.

Installation Guidelines

Soil Preparation

- Where appropriate or feasible, soil should be prepared to receive the seed by disking or otherwise scarifying the surface to eliminate crust, improve air and water infiltration and create a more favorable environment for germination and growth.
- Based upon soil testing conducted, apply additional soil amendments (e.g. fertilizers, additional seed) to the soil to help with germination. Follow EC-4, Hydroseeding, when selecting and applying seed and fertilizers.

Cut Slope Roughening:

- Stair-step grade or groove the cut slopes that are steeper than 3:1.
- Use stair-step grading on any erodible material soft enough to be ripped with a bulldozer. Slopes consisting of soft rock with some subsoil are particularly suited to stair-step grading.
- Make the vertical cut distance less than the horizontal distance, and slightly slope the horizontal position of the "step" in toward the vertical wall.
- Do not make individual vertical cuts more than 2 feet (0.6 m) high in soft materials or more than 3 feet (0.9 m) high in rocky materials.
- Groove the slope using machinery to create a series of ridges and depressions that run across the slope, on the contour.

Fill Slope Roughening:

- Place on fill slopes with a gradient steeper than 3:1 in lifts not to exceed 8 inches (0.2 m), and make sure each lift is properly compacted.
- Ensure that the face of the slope consists of loose, uncompacted fill 4-6 inches (0.1-0.2 m) deep.
- Use grooving or tracking to roughen the face of the slopes, if necessary.
- Do not blade or scrape the final slope face.

Roughening for Slopes to be Mowed:

- Slopes which require mowing activities should not be steeper than 3:1.
- Roughen these areas to shallow grooves by track walking, scarifying, sheepsfoot rolling, or imprinting.
- Make grooves close together (less than 10 inches), and not less than 1 inch deep, and perpendicular to the direction of runoff (i.e., parallel to the slope contours).
- Excessive roughness is undesirable where mowing is planned.

Roughening With Tracked Machinery:

- Limit roughening with tracked machinery to soils with a sandy textural component to avoid undue compaction of the soil surface.
- Operate tracked machinery up and down the slope to leave horizontal depressions in the soil. Do not back-blade during the final grading operation.
- Seed and mulch roughened areas as soon as possible to obtain optimum seed germination and growth.

Soil Preparation/Roughening EC-15

Costs

Costs are based on the additional labor of tracking or preparation of the slope plus the cost of any required soil amendment materials.

Inspection and Maintenance

- BMPs must be inspected in accordance with General Permit requirements for the associated project type and risk level. It is recommended that at a minimum, BMPs be inspected weekly, prior to forecasted rain events, daily during extended rain events, and after the conclusion of rain events.
- Check the seeded slopes for signs of erosion such as rills and gullies. Fill these areas slightly above the original grade, then reseed and mulch as soon as possible.
- Inspect BMPs weekly during normal operations, prior to forecasted rain events, daily during extended rain events, and after the conclusion of rain events.

References

Soil Stabilization BMP Research for Erosion and Sediment Controls: Cost Survey Technical Memorandum, State of California Department of Transportation (Caltrans), July 2007.

Erosion and Sediment Control Manual, Oregon Department of Environmental Quality, February 2005.

Non-Vegetative Stabilization EC-16

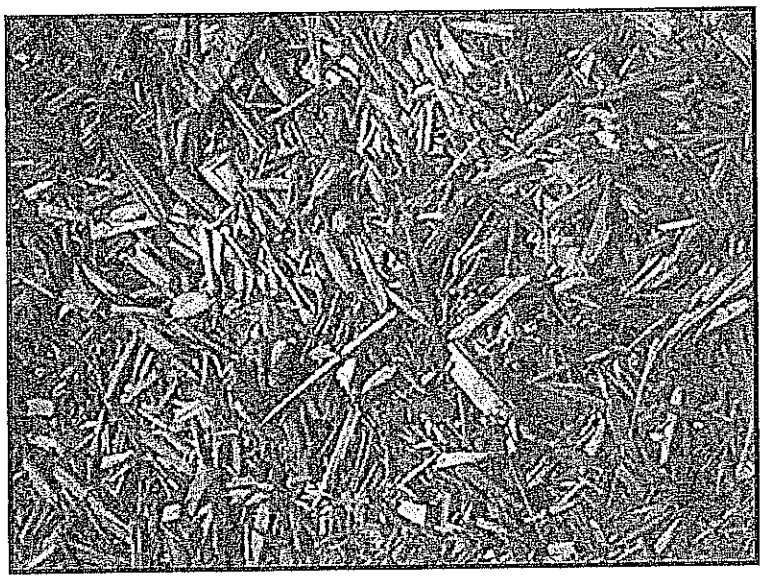

Categories

EC	Erosion Control	☑
SE	Sediment Control	☒
TR	Tracking Control	
WE	Wind Erosion Control	☒
NS	Non-Stormwater Management Control	
WM	Waste Management and Materials Pollution Control	

Legend:

☑ **Primary Category**

☒ **Secondary Category**

Targeted Constituents

Sediment	☑
Nutrients	
Trash	
Metals	
Bacteria	
Oil and Grease	
Organics	

Potential Alternatives

None

Description and Purpose

Non-vegetative stabilization methods are used for temporary or permanent stabilization of areas prone to erosion and should be used only where vegetative options are not feasible; examples include:

- Areas of vehicular or pedestrian traffic such as roads or paths;
- Arid environments where vegetation would not provide timely ground coverage, or would require excessive irrigation;
- Rocky substrate, infertile or droughty soils where vegetation would be difficult to establish; and
- Areas where vegetation will not grow adequately within the construction time frame.

There are several non-vegetative stabilization methods and selection should be based on site-specific conditions.

Decomposed Granite (DG) is a permanent erosion protection method that consists of a layer of stabilized decomposed granite placed over an erodible surface.

Degradable Mulches of various types (see EC-3, EC-6, EC-8) can be used for temporary non-vegetative stabilization; examples include straw mulch, compost, wood chips or hydraulic mulch.

Geotextiles and Mats can be used for temporary non-vegetative stabilization (see EC-7). These BMPs are typically manufactured

CASQA
CALIFORNIA STORMWATER QUALITY ASSOCIATION

from degradable or synthetic materials and are designed and specified based on their functional longevity, i.e., how long they will persist and provide erosion protection. All geotextiles and mats should be replaced when they exceed their functional longevity or when permanent stabilization methods are instituted.

Gravel Mulch is a non-degradable erosion control product that is composed of washed and screened coarse to very coarse gravel, 16 mm to 64 mm (0.6" - 2.5"), similar to an AASHTO No. 3 coarse aggregate.

Rock Slope Protection consists of utilizing large rock or rip-rap (4"- 24") to stabilize slopes with a high erosion potential and those subject to scour along waterways.

Soil Binders can be used for temporary non-vegetative stabilization (see EC-5). The key to their use is functional longevity. In most cases, the soil binder will need to be routinely monitored and re-applied to maintain an erosion-resistant coverage.

Suitable Applications

Non-vegetated stabilization methods are suitable for use on disturbed soil areas and on material stockpiles that need to be temporarily or permanently protected from erosion by water and wind. Non-vegetated stabilization should only be utilized when vegetation cannot be established in the required timeframe, due to soil or climactic conditions, or where vegetation may be a potential fire hazard.

Decomposed Granite (DG) and Gravel Mulch are suitable for use in areas where vegetation establishment is difficult, on flat surfaces, trails and pathways, and when used in conjunction with a stabilizer or tackifier, on shallow slopes (i.e., 10:1 [H:V]). DG and gravel can also be used on shallow rocky slopes where vegetation cannot be established for permanent erosion control.

Degradable Mulches can be used to cover and protect soil surfaces from erosion both in temporary and permanent applications. In many cases, the use of mulches by themselves requires routine inspection and re-application. See EC-3 Hydraulic Mulch, EC-6 Straw Mulch, EC-8 Wood Mulch, or EC-14 Compost Blankets for more information.

Geotextiles and Mats can be used as a temporary stand-alone soil stabilization method. Depending on material selection, geotextiles and mats can be a short-term (3 mos – 1 year) or long-term (1-2 years) temporary stabilization method. For more information on geotextiles and mats see EC-7 Geotextiles and Mats.

Rock Slope Protection can be used when the slopes are subject to scour or have a high erosion potential, such as slopes adjacent to flowing waterways or slopes subject to overflow from detention facilities (spillways).

Soil Binders can be used for temporary stabilization of stockpiles and disturbed areas not subject to heavy traffic. See EC-5 Soil Binders for more information.

Non-Vegetative Stabilization EC-16

Limitations

General

- Refer to EC-3, EC-6, EC-8, and EC-14 for limitations on use of mulches. Refer to EC-7 for limitations on use of geotextiles and mats. Refer to EC-5 for limitations on use of Soil Binders.

Decomposed Granite

- Not available in some geographic regions.
- If not tackified, material may be susceptible to erosion even on slight slopes (e.g., 30:1 [H:V]).
- Installed costs may be more expensive than vegetative stabilization methods.

Gravel Mulch

- Availability is limited in some geographic regions.
- If not properly screened and washed, can contain fine material that can erode and/or create dust problems.
- If inadequately sized, material may be susceptible to erosion on sloped areas.
- Pore spaces fill with dirt and debris over time; may provide a growing medium for weeds.

Rock Slope Protection

- Installation is labor intensive.
- Installed costs can be significantly higher than vegetative stabilization methods.
- Rounded stones may not be used on slopes greater than 2:1 [H:V].

Implementation

General

Non-vegetated stabilization should be used in accordance with the following general guidance:

- Should be used in conjunction with other BMPs, including drainage, erosion controls and sediment controls.
- Refer to EC-3, EC-6, EC-8, and EC-14 for implementation details for mulches. Refer to EC-7 for implementation details for geotextiles and mats. Refer to EC-5 for implementation details for soil binders.
- Non-vegetated stabilization measures should be implemented as soon as the disturbance in the areas they are intended to protect has ceased.
- Additional guidance on the comparison and selection of temporary slope stabilization methods is provided in Appendix F of the Handbook.

Decomposed Granite Stabilization

- If used for a road or path should be installed on a prepared base.

- Should be mixed with a stabilizer if used for roads or pathways, or on slope applications.
- Though porous it is recommended to prevent standing water on or next to a decomposed granite road or pathway.

Gravel Mulch

- Should be sized based on slope, rainfall, and upgradient run-on conditions. Stone size should be increased as potential for erosion increases (steeper slopes, high intensity rainfall).
- If permanent, a weed control fabric should be placed prior to installation.
- Should be installed at a minimum 2" depth.
- Should completely cover all exposed surfaces.

Rock Slope Protection

- Rock slope protection installation should follow Caltrans Standard Specification 72-2: Rock Slope Protection. Refer to the specification for rock conformity requirements and installation methods.
- When using rock slope protection, rock size and installation method should be specified by an Engineer.
- A geotextile fabric should be placed prior to installation.

Costs

- Costs are highly variable depending not only on technique chosen, but also on materials chosen within specific techniques. In addition, availability of certain materials will vary by region/location, which will also affect the cost. Costs of mulches, geotextiles and mats, and soil binders are presented in their respective fact sheets. Costs for decomposed granite, gravel mulch stabilization and rock slope protection may be higher depending on location and availability of materials. Caltrans has provided an estimate for gravel mulch of \$10 - \$15/yd^2 in flat areas and \$11 - \$23/yd^2 on side slopes.

Inspection and Maintenance

General

- BMPs must be inspected in accordance with General Permit requirements for the associated project type and risk level. It is recommended that at a minimum, BMPs be inspected weekly, prior to forecasted rain events, daily during extended rain events, and after the conclusion of rain events.
- For permanent installation, require inspection periodically and after major storm events to look for signs of erosion or damage to the stabilization.
- All damage should be repaired immediately.
- Refer to EC-3, EC-6, EC-8, and EC-14 for inspection and maintenance requirements for mulches. Refer to EC-7 for inspection and maintenance requirements for geotextiles and mats. Refer to EC-5 for inspection and maintenance requirements for soil binders.

Decomposed Granite and Gravel Mulch Stabilization

- Rake out and add decomposed granite or gravel as needed to areas subject to rill erosion. Inspect upgradient drainage controls and repair/modify as necessary.
- Should remain stable under loose surface material. Any significant problem areas should be repaired to restore uniformity to the installation.

References

Arid Zone Forestry: A Guide for Field Technicians. Food and Agriculture Organization of the United Nations, 1989.

Design of Roadside Channels with Flexible Linings, Hydraulic Engineering Circular Number 15, Third Edition, Federal Highway Administration, 2007.

Design Standards for Urban Infrastructure - Soft Landscape Design, Department of Territory and Municipal Services - Australian Capital Territory http://www.tams.act.gov.au/work/standards_and_procedures/design_standards_for_urban_infrastructure

Erosion and Sediment Control Handbook: A Guide for Protection of State Waters through the use of Best Management Practices during Land Disturbing Activities, Tennessee Department of Environment and Conservation, 2002.

Gravel Mulch, Landscape Architecture Non-Standard Specification 10-2, California Department of Transportation (Caltrans), http://www.dot.ca.gov/hq/LandArch/roadside/detail-gm.htm

Maine Erosion and Sediment Control BMPs, DEPLW0588, Maine Department of Environmental Protection: Bureau of Land and Water Quality, 2003.

National Menu of Best Management Practices, US Environmental Protection Agency, 2006.

Standard Specification 72-2: Rock Slope Protection. California Department of Transportation, 2006.

Stormwater Quality Handbooks Construction Site Best Management Practices (BMPs) Manual, State of California Department of Transportation (Caltrans), March 2003.

Silt Fence

SE-1

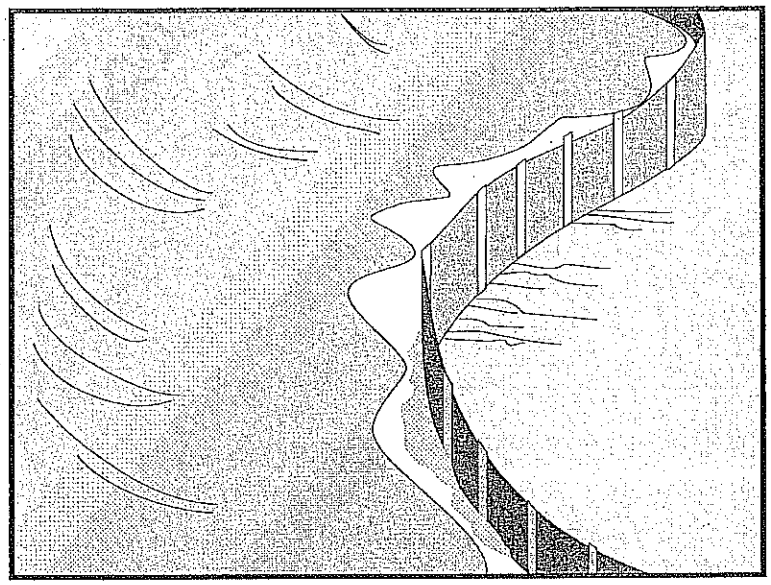

Categories

EC	Erosion Control	
SE	Sediment Control	☑
TC	Tracking Control	
WE	Wind Erosion Control	
NS	Non-Stormwater Management Control	
WM	Waste Management and Materials Pollution Control	

Legend:

☑ **Primary Category**

☒ **Secondary Category**

Targeted Constituents

Sediment	☑
Nutrients	
Trash	
Metals	
Bacteria	
Oil and Grease	
Organics	

Potential Alternatives

SE-5 Fiber Rolls

SE-6 Gravel Bag Berm

SE-8 Sandbag Barrier

SE-10 Storm Drain Inlet Protection

SE-14 Biofilter Bags

Description and Purpose

A silt fence is made of a woven geotextile that has been entrenched, attached to supporting poles, and sometimes backed by a plastic or wire mesh for support. The silt fence detains sediment-laden water, promoting sedimentation behind the fence.

Suitable Applications

Silt fences are suitable for perimeter control, placed below areas where sheet flows discharge from the site. They could also be used as interior controls below disturbed areas where runoff may occur in the form of sheet and rill erosion and around inlets within disturbed areas (SE-10). Silt fences are generally ineffective in locations where the flow is concentrated and are only applicable for sheet or overland flows. Silt fences are most effective when used in combination with erosion controls. Suitable applications include:

- Along the perimeter of a project.
- Below the toe or down slope of exposed and erodible slopes.
- Along streams and channels.
- Around temporary spoil areas and stockpiles.
- Around inlets.
- Below other small cleared areas.

CASQA
CALIFORNIA STORMWATER QUALITY ASSOCIATION

Silt Fence SE-1

Limitations

- Do not use in streams, channels, drain inlets, or anywhere flow is concentrated.
- Do not use in locations where ponded water may cause a flooding hazard. Runoff typically ponds temporarily on the upstream side of silt fence.
- Do not use silt fence to divert water flows or place across any contour line. Fences not constructed on a level contour, or fences used to divert flow will concentrate flows resulting in additional erosion and possibly overtopping or failure of the silt fence.
- Improperly installed fences are subject to failure from undercutting, overtopping, or collapsing.
- Not effective unless trenched and keyed in.
- Not intended for use as mid-slope protection on slopes greater than 4:1 (H:V).
- Do not use on slopes subject to creeping, slumping, or landslides.

Implementation

General

A silt fence is a temporary sediment barrier consisting of woven geotextile stretched across and attached to supporting posts, trenched-in, and, depending upon the strength of fabric used, supported with plastic or wire mesh fence. Silt fences trap sediment by intercepting and detaining small amounts of sediment-laden runoff from disturbed areas in order to promote sedimentation behind the fence.

The following layout and installation guidance can improve performance and should be followed:

- Use principally in areas where sheet flow occurs.
- Install along a level contour, so water does not pond more than 1.5 ft at any point along the silt fence.
- The maximum length of slope draining to any point along the silt fence should be 200 ft or less.
- The maximum slope perpendicular to the fence line should be 1:1.
- Provide sufficient room for runoff to pond behind the fence and to allow sediment removal equipment to pass between the silt fence and toes of slopes or other obstructions. About 1200 ft^2 of ponding area should be provided for every acre draining to the fence.
- Turn the ends of the filter fence uphill to prevent stormwater from flowing around the fence.
- Leave an undisturbed or stabilized area immediately down slope from the fence where feasible.

- Silt fences should remain in place until the disturbed area is permanently stabilized, after which, the silt fence should be removed and properly disposed.
- Silt fence should be used in combination with erosion source controls up slope in order to provide the most effective sediment control.
- Be aware of local regulations regarding the type and installation requirements of silt fence, which may differ from those presented in this fact sheet.

Design and Layout

The fence should be supported by a plastic or wire mesh if the fabric selected does not have sufficient strength and bursting strength characteristics for the planned application (as recommended by the fabric manufacturer). Woven geotextile material should contain ultraviolet inhibitors and stabilizers to provide a minimum of six months of expected usable construction life at a temperature range of 0 °F to 120 °F.

- Layout in accordance with attached figures.
- For slopes steeper than 2:1 (H:V) and that contain a high number of rocks or large dirt clods that tend to dislodge, it may be necessary to install additional protection immediately adjacent to the bottom of the slope, prior to installing silt fence. Additional protection may be a chain link fence or a cable fence.
- For slopes adjacent to sensitive receiving waters or Environmentally Sensitive Areas (ESAs), silt fence should be used in conjunction with erosion control BMPs.

Standard vs. Heavy Duty Silt Fence

Standard Silt Fence

- Generally applicable in cases where the slope of area draining to the silt fence is 4:1 (H:V) or less.
- Used for shorter durations, typically 5 months or less
- Area draining to fence produces moderate sediment loads.

Heavy Duty Silt Fence

- Use is generally limited to 8 months or less.
- Area draining to fence produces moderate sediment loads.
- Heavy duty silt fence usually has 1 or more of the following characteristics, not possessed by standard silt fence.
  - Fence fabric has higher tensile strength.
  - Fabric is reinforced with wire backing or additional support.
  - Posts are spaced closer than pre-manufactured, standard silt fence products.
  - Posts are metal (steel or aluminum)

Materials

Standard Silt Fence

- Silt fence material should be woven geotextile with a minimum width of 36 in. and a minimum tensile strength of 100 lb force. The fabric should conform to the requirements in ASTM designation D4632 and should have an integral reinforcement layer. The

reinforcement layer should be a polypropylene, or equivalent, net provided by the manufacturer. The permittivity of the fabric should be between 0.1 sec^{-1} and 0.15 sec^{-1} in conformance with the requirements in ASTM designation D4491.

- Wood stakes should be commercial quality lumber of the size and shape shown on the plans. Each stake should be free from decay, splits or cracks longer than the thickness of the stake or other defects that would weaken the stakes and cause the stakes to be structurally unsuitable.

- Staples used to fasten the fence fabric to the stakes should be not less than 1.75 in. long and should be fabricated from 15 gauge or heavier wire. The wire used to fasten the tops of the stakes together when joining two sections of fence should be 9 gauge or heavier wire. Galvanizing of the fastening wire will not be required.

Heavy-Duty Silt Fence

- Some silt fence has a wire backing to provide additional support, and there are products that may use prefabricated plastic holders for the silt fence and use metal posts or bar reinforcement instead of wood stakes. If bar reinforcement is used in lieu of wood stakes, use number four or greater bar. Provide end protection for any exposed bar reinforcement for health and safety purposes.

Installation Guidelines – Traditional Method

Silt fences are to be constructed on a level contour. Sufficient area should exist behind the fence for ponding to occur without flooding or overtopping the fence.

- A trench should be excavated approximately 6 in. wide and 6 in. deep along the line of the proposed silt fence (trenches should not be excavated wider or deeper than necessary for proper silt fence installation).

- Bottom of the silt fence should be keyed-in a minimum of 12 in.

- Posts should be spaced a maximum of 6 ft apart and driven securely into the ground a minimum of 18 in. or 12 in. below the bottom of the trench.

- When standard strength geotextile is used, a plastic or wire mesh support fence should be fastened securely to the upslope side of posts using heavy–duty wire staples at least 1 in. long. The mesh should extend into the trench.

- When extra-strength geotextile and closer post spacing are used, the mesh support fence may be eliminated.

- Woven geotextile should be purchased in a long roll, then cut to the length of the barrier. When joints are necessary, geotextile should be spliced together only at a support post, with a minimum 6 in. overlap and both ends securely fastened to the post.

- The trench should be backfilled with native material and compacted.

- Construct silt fences with a setback of at least 3 ft from the toe of a slope. Where, due to specific site conditions, a 3 ft setback is not available, the silt fence may be constructed at the

toe of the slope, but should be constructed as far from the toe of the slope as practicable. Silt fences close to the toe of the slope will be less effective and more difficult to maintain.

- Construct the length of each reach so that the change in base elevation along the reach does not exceed 1/3 the height of the barrier; in no case should the reach exceed 500 ft.
- Cross barriers should be a minimum of $^1/_3$ and a maximum of ½ the height of the linear barrier.
- See typical installation details at the end of this fact sheet.

Installation Guidelines - Static Slicing Method

- Static Slicing is defined as insertion of a narrow blade pulled behind a tractor, similar to a plow blade, at least 10 inches into the soil while at the same time pulling silt geotextile fabric into the ground through the opening created by the blade to the depth of the blade. Once the gerotextile is installed, the soil is compacted using tractor tires.
- This method will not work with pre-fabricated, wire backed silt fence.
- Benefits:
    - Ease of installation (most often done with a 2 person crew). In addition, installation using static slicing has been found to be more efficient on slopes, in rocky soils, and in saturated soils.
    - Minimal soil disturbance.
    - Greater level of compaction along fence, leading to higher performance (i.e. greater sediment retention).
    - Uniform installation.
    - Less susceptible to undercutting/undermining.

Costs

- It should be noted that costs vary greatly across regions due to available supplies and labor costs.
- Average annual cost for installation using the traditional silt fence installation method (assumes 6 month useful life) is $7 per linear foot based on vendor research. Range of cost is $3.50 - $9.10 per linear foot.
- In tests, the slicing method required 0.33 man hours per 100 linear feet, while the trenched based systems required as much as 1.01 man hours per linear foot.

Inspection and Maintenance

- BMPs must be inspected in accordance with General Permit requirements for the associated project type and risk level. It is recommended that at a minimum, BMPs be inspected weekly, prior to forecasted rain events, daily during extended rain events, and after the conclusion of rain events.
- Repair undercut silt fences.

- Repair or replace split, torn, slumping, or weathered fabric. The lifespan of silt fence fabric is generally 5 to 8 months.
- Silt fences that are damaged and become unsuitable for the intended purpose should be removed from the site of work, disposed, and replaced with new silt fence barriers.
- Sediment that accumulates in the BMP should be periodically removed in order to maintain BMP effectiveness. Sediment should be removed when the sediment accumulation reaches one-third of the barrier height.
- Silt fences should be left in place until the upstream area is permanently stabilized. Until then, the silt fence should be inspected and maintained regularly.
- Remove silt fence when upgradient areas are stabilized. Fill and compact post holes and anchor trench, remove sediment accumulation, grade fence alignment to blend with adjacent ground, and stabilize disturbed area.

References

Manual of Standards of Erosion and Sediment Control Measures, Association of Bay Area Governments, May 1995.

National Management Measures to Control Nonpoint Source Pollution from Urban Areas, United States Environmental Protection Agency, 2002.

Proposed Guidance Specifying Management Measures for Sources of Nonpoint Pollution in Coastal Waters, Work Group-Working Paper, USEPA, April 1992.

Sedimentation and Erosion Control Practices, and Inventory of Current Practices (Draft), UESPA, 1990.

Southeastern Wisconsin Regional Planning Commission (SWRPC). Costs of Urban Nonpoint Source Water Pollution Control Measures. Technical Report No. 31. Southeastern Wisconsin Regional Planning Commission, Waukesha, WI. 1991

Stormwater Quality Handbooks - Construction Site Best Management Practices (BMPs) Manual, State of California Department of Transportation (Caltrans), March 2003.

Stormwater Management Manual for The Puget Sound Basin, Washington State Department of Ecology, Public Review Draft, 1991.

U.S. Environmental Protection Agency (USEPA). Stormwater Management for Industrial Activities: Developing Pollution Prevention Plans and Best Management Practices. U.S. Environmental Protection Agency, Office of Water, Washington, DC, 1992.

Water Quality Management Plan for the Lake Tahoe Region, Volume II, Handbook of Management Practices, Tahoe Regional Planning Agency, November 1988.Soil Stabilization BMP Research for Erosion and Sediment Controls: Cost Survey Technical Memorandum, State of California Department of Transportation (Caltrans), July 2007.

Erosion and Sediment Control Manual, Oregon Department of Environmental Quality, February 2005.

Silt Fence

SE-1

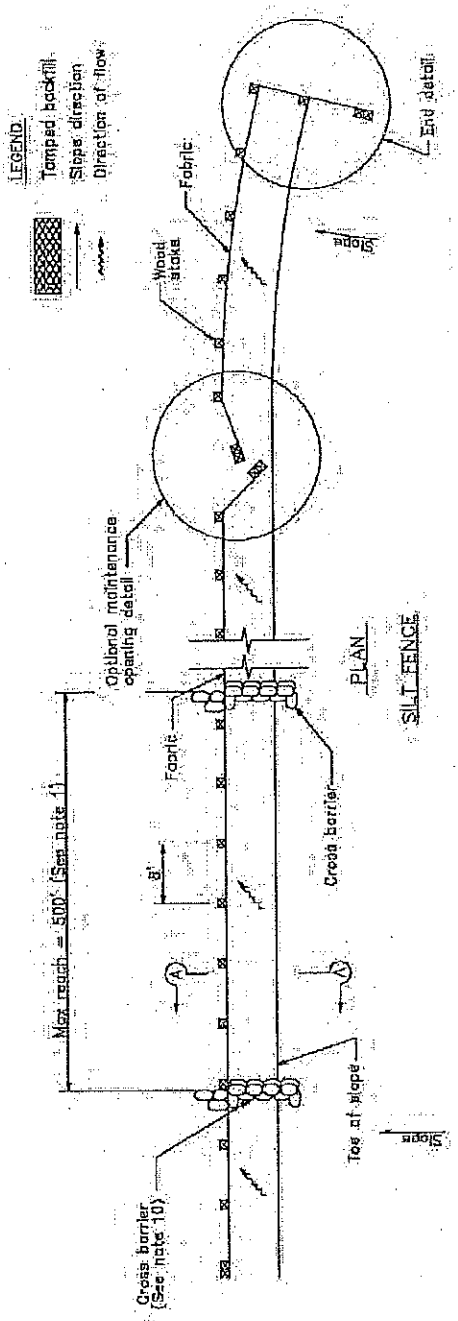

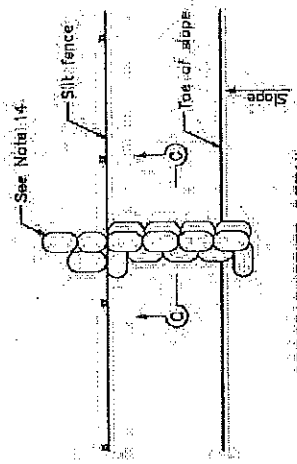

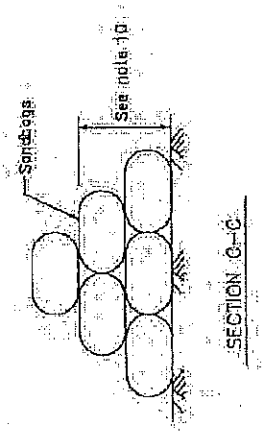

NOTES

1. Construct the length of each reach so that the change in base elevation along the reach does not exceed 1/3 the height of the linear barrier, in no case shall the reach length exceed 500'.
2. The last 8'-0" of fence shall be turned up slope.
3. Stake dimensions are nominal.
4. Dimension may vary to fit field condition.
5. Stakes shall be spaced at 8'-0" maximum and shall be positioned on downstream side of fence.
6. Stakes to overlap and fence fabric to fold around each stake one full turn. Secure fabric to stake with 4 staples.
7. Stakes shall be driven tightly together to prevent potential flow-through of sediment at joint. The tops of the stakes shall be secured with wire.
8. For end stake, fence fabric shall be folded around two stakes one full turn and secured with 4 staples.
9. Minimum 4 staples per stake. Dimensions shown are typical.
10. Cross barriers shall be a minimum of 1/3 and a maximum of 1/2 the height of the linear barrier.
11. Maintenance openings shall be constructed in a manner to ensure sediment remains behind silt fence.
12. Joining sections shall not be placed at sump locations.
13. Sandbag rows and layers shall be offset to eliminate gaps.
14. Add 3-4 bags to cross barrier on downgradient side of silt fence as needed to prevent bypass or undermining and as allowable based on site limits of disturbance.

Silt Fence

SE-1

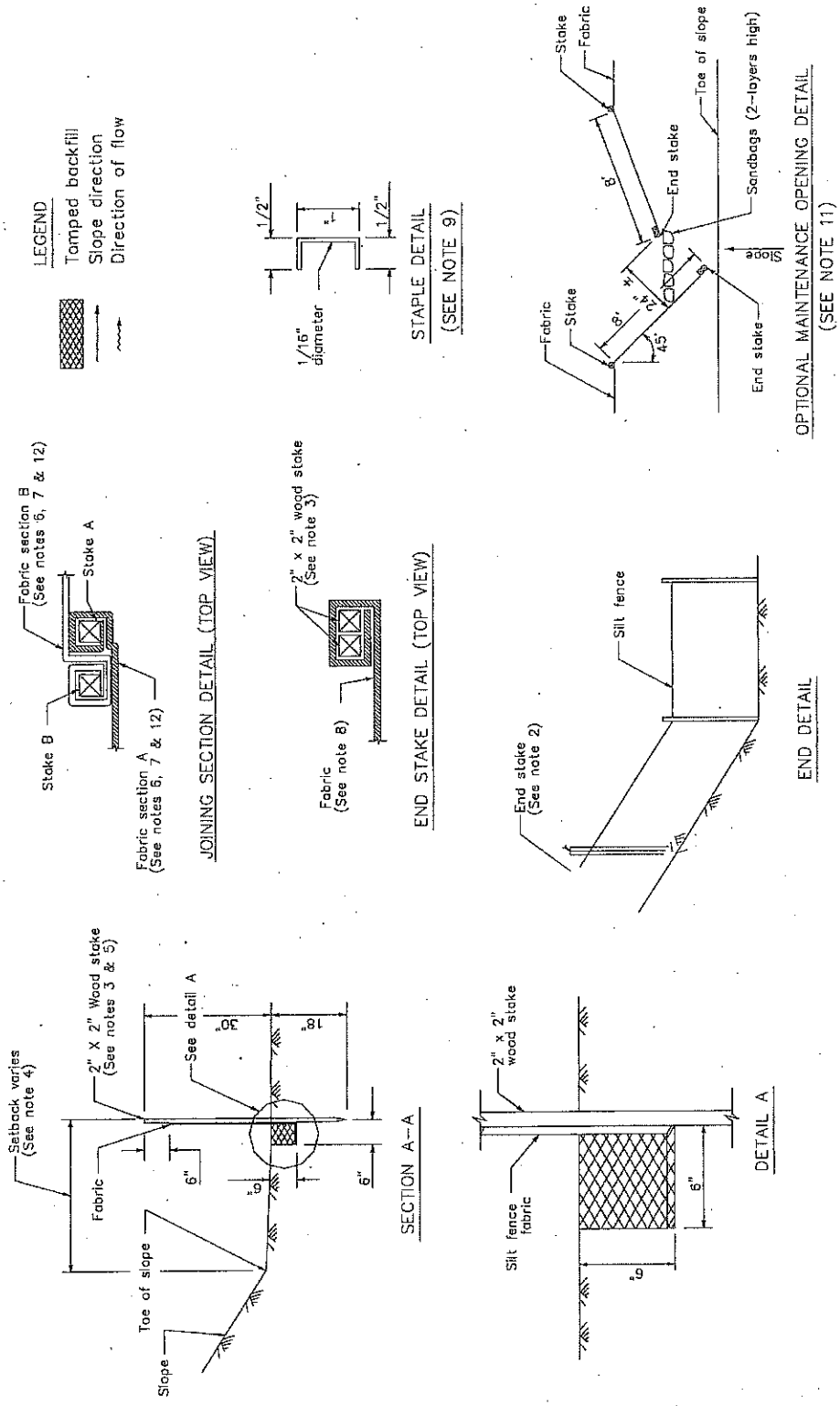

Check Dams

SE-4

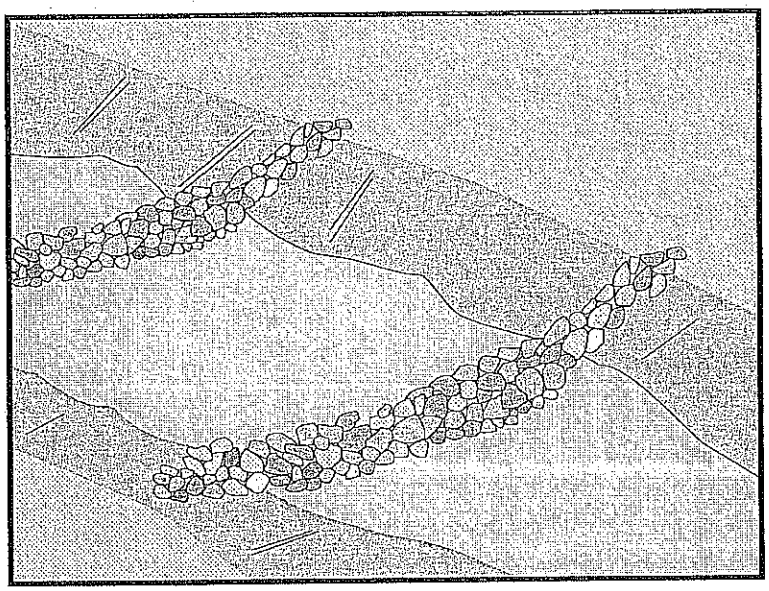

Categories

EC	Erosion Control	☒
SE	Sediment Control	☑
TC	Tracking Control	
WE	Wind Erosion Control	
NS	Non-Stormwater Management Control	
WM	Waste Management and Materials Pollution Control	

Legend:

☑ **Primary Category**

☒ **Secondary Category**

Targeted Constituents

Sediment	☑
Nutrients	
Trash	
Metals	
Bacteria	
Oil and Grease	
Organics	

Potential Alternatives

SE-5 Fiber Rolls

SE-6 Gravel Bag Berm

SE-8 Sandbag Barrier

SE-14 Biofilter Bags

Description and Purpose

A check dam is a small barrier constructed of rock, gravel bags, sandbags, fiber rolls, or other proprietary products, placed across a constructed swale or drainage ditch. Check dams reduce the effective slope of the channel, thereby reducing scour and channel erosion by reducing flow velocity and increasing residence time within the channel, allowing sediment to settle.

Suitable Applications

Check dams may be appropriate in the following situations:

- To promote sedimentation behind the dam.
- To prevent erosion by reducing the velocity of channel flow in small intermittent channels and temporary swales.
- In small open channels that drain 10 acres or less.
- In steep channels where stormwater runoff velocities exceed 5 ft/s.
- During the establishment of grass linings in drainage ditches or channels.
- In temporary ditches where the short length of service does not warrant establishment of erosion-resistant linings.
- To act as a grade control structure.

Limitations

- Not to be used in live streams or in channels with extended base flows.
- Not appropriate in channels that drain areas greater than 10 acres.
- Not appropriate in channels that are already grass-lined unless erosion potential or sediment-laden flow is expected, as installation may damage vegetation.
- Require extensive maintenance following high velocity flows.
- Promotes sediment trapping which can be re-suspended during subsequent storms or removal of the check dam.
- Do not construct check dams with straw bales or silt fence.
- Water suitable for mosquito production may stand behind check dams, particularly if subjected to daily non-stormwater discharges.

Implementation

General

Check dams reduce the effective slope and create small pools in swales and ditches that drain 10 acres or less. Using check dams to reduce channel slope reduces the velocity of stormwater flows, thus reducing erosion of the swale or ditch and promoting sedimentation. Thus, check dams are dual-purpose and serve an important role as erosion controls as well as as sediment controls. Note that use of 1-2 isolated check dams for sedimentation will likely result in little net removal of sediment because of the small detention time and probable scour during longer storms. Using a series of check dams will generally increase their effectiveness. A sediment trap (SE-3) may be placed immediately upstream of the check dam to increase sediment removal efficiency.

Design and Layout

Check dams work by decreasing the effective slope in ditches and swales. An important consequence of the reduced slope is a reduction in capacity of the ditch or swale. This reduction in capacity should be considered when using this BMP, as reduced capacity can result in overtopping of the ditch or swale and resultant consequences. In some cases, such as a "permanent" ditch or swale being constructed early and used as a "temporary" conveyance for construction flows, the ditch or swale may have sufficient capacity such that the temporary reduction in capacity due to check dams is acceptable. When check dams reduce capacities beyond acceptable limits, either:

- Don't use check dams. Consider alternative BMPs, or.
- Increase the size of the ditch or swale to restore capacity.

Maximum slope and velocity reduction is achieved when the toe of the upstream dam is at the same elevation as the top of the downstream dam (see "Spacing Between Check Dams" detail at the end of this fact sheet). The center section of the dam should be lower than the edge sections (at least 6 inches), acting as a spillway, so that the check dam will direct flows to the center of

the ditch or swale (see "Typical Rock Check Dam" detail at the end of this fact sheet). Bypass or side-cutting can occur if a sufficient spillway is not provided in the center of the dam.

Check dams are usually constructed of rock, gravel bags, sandbags, and fiber rolls. A number of products can also be used as check dams (e.g. HDPE check dams, temporary silt dikes (SE-12)), and some of these products can be removed and reused. Check dams can also be constructed of logs or lumber, and have the advantage of a longer lifespan when compared to gravel bags, sandbags, and fiber rolls. Check dams should not be constructed from straw bales or silt fences, since concentrated flows quickly wash out these materials.

Rock check dams are usually constructed of 8 to 12 in. rock. The rock is placed either by hand or mechanically, but never just dumped into the channel. The dam should completely span the ditch or swale to prevent washout. The rock used should be large enough to stay in place given the expected design flow through the channel. It is recommended that abutments be extended 18 in. into the channel bank. Rock can be graded such that smaller diameter rock (e.g. 2-4 in) is located on the upstream side of larger rock (holding the smaller rock in place); increasing residence time.

Log check dams are usually constructed of 4 to 6 in. diameter logs, installed vertically. The logs should be embedded into the soil at least 18 in. Logs can be bolted or wired to vertical support logs that have been driven or buried into the soil.

See fiber rolls, SE-5, for installation of fiber roll check dams.

Gravel bag and sand bag check dams are constructed by stacking bags across the ditch or swale, shaped as shown in the drawings at the end of this fact sheet (see "Gravel Bag Check Dam" detail at the end of this fact sheet).

Manufactured products, such as temporary silt dikes (SE-12), should be installed in accordance with the manufacturer's instructions. Installation typically requires anchoring or trenching of products, as well as regular maintenance to remove accumulated sediment and debris.

If grass is planted to stabilize the ditch or swale, the check dam should be removed when the grass has matured (unless the slope of the swales is greater than 4%).

The following guidance should be followed for the design and layout of check dams:

- Install the first check dam approximately 16 ft from the outfall device and at regular intervals based on slope gradient and soil type.
- Check dams should be placed at a distance and height to allow small pools to form between each check dam.
- For multiple check dam installation, backwater from a downstream check dam should reach the toes of the upstream check dam.
- A sediment trap provided immediately upstream of the check dam will help capture sediment. Due to the potential for this sediment to be resuspended in subsequent storms, the sediment trap should be cleaned following each storm event.

- High flows (typically a 2-year storm or larger) should safely flow over the check dam without an increase in upstream flooding or damage to the check dam.
- Where grass is used to line ditches, check dams should be removed when grass has matured sufficiently to protect the ditch or swale.

Materials

- Rock used for check dams should typically be 8-12 in rock and be sufficiently sized to stay in place given expected design flows in the channel. Smaller diameter rock (e.g. 2 to 4 in) can be placed on the upstream side of larger rock to increase residence time.
- Gravel bags used for check dams should conform to the requirements of SE-6, Gravel Bag Berms.
- Sandbags used for check dams should conform to SE-8, Sandbag Barrier.
- Fiber rolls used for check dams should conform to SE-5, Fiber Rolls.
- Temporary silt dikes used for check dams should conform to SE-12, Temporary Silt Dikes.

Installation

- Rock should be placed individually by hand or by mechanical methods (no dumping of rock) to achieve complete ditch or swale coverage.
- Tightly abut bags and stack according to detail shown in the figure at the end of this section (pyramid approach). Gravel bags and sandbags should not be stacked any higher than 3 ft.
- Upper rows or gravel and sand bags shall overlap joints in lower rows.
- Fiber rolls should be trenched in, backfilled, and firmly staked in place.
- Install along a level contour.
- HDPE check dams, temporary silt dikes, and other manufactured products should be used and installed per manufacturer specifications.

Costs

Cost consists of labor costs if materials are readily available (such as gravel on-site). If material must be imported, costs will increase. For other material and installation costs, see SE-5, SE-6, SE-8, SE-12, and SE-14.

Inspection and Maintenance

- BMPs must be inspected in accordance with General Permit requirements for the associated project type and risk level. It is recommended that at a minimum, BMPs be inspected weekly, prior to forecasted rain events, daily during extended rain events, and after the conclusion of rain events.
- Replace missing rock, bags, rolls, etc. Replace bags or rolls that have degraded or have become damaged.

- If the check dam is used as a sediment capture device, sediment that accumulates behind the BMP should be periodically removed in order to maintain BMP effectiveness. Sediment should be removed when the sediment accumulation reaches one-third of the barrier height.
- If the check dam is used as a grade control structure, sediment removal is not required as long as the system continues to control the grade.
- Inspect areas behind check dams for pools of standing water, especially if subjected to daily non-stormwater discharges.
- Remove accumulated sediment prior to permanent seeding or soil stabilization.
- Remove check dam and accumulated sediment when check dams are no longer needed.

References

Draft – Sedimentation and Erosion Control, and Inventory of Current Practices, USEPA, April 1990.

Manual of Standards of Erosion and Sediment Control Measures, Association of Bay Area Governments, May 1995.

Stormwater Quality Handbooks - Construction Site Best Management Practices (BMPs) Manual, State of California Department of Transportation (Caltrans), March 2003.

Stormwater Management of the Puget Sound Basin, Technical Manual, Publication #91-75, Washington State Department of Ecology, February 1992.

Erosion and Sediment Control Manual, Oregon Department of Environmental Quality, February 2005.

Metzger, M.E. 2004. Managing mosquitoes in stormwater treatment devices. University of California Division of Agriculture and Natural Resources, Publication 8125. On-line: http://anrcatalog.ucdavis.edu/pdf/8125.pdf

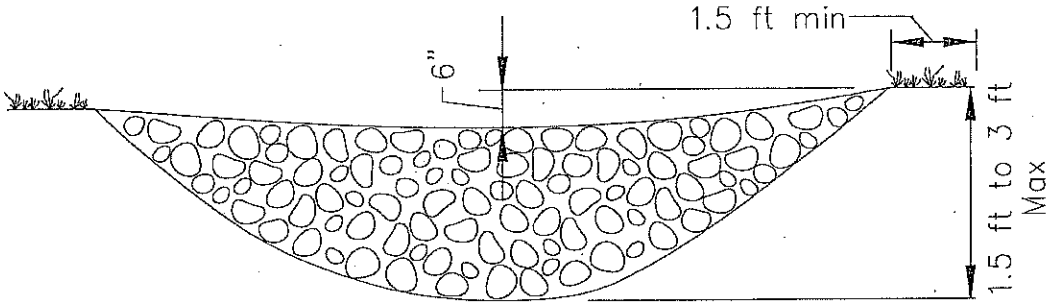

ELEVATION

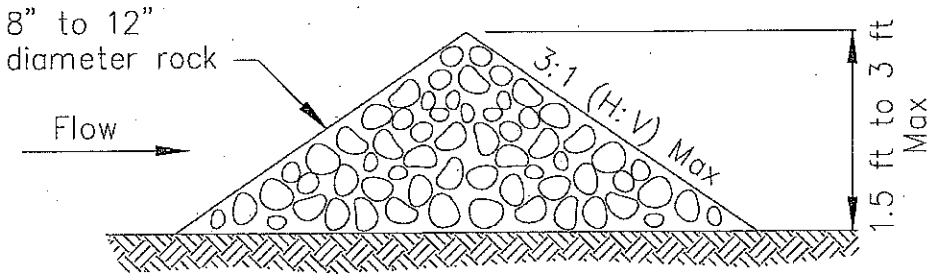

TYPICAL ROCK CHECK DAM SECTION

ROCK CHECK DAM
NOT TO SCALE

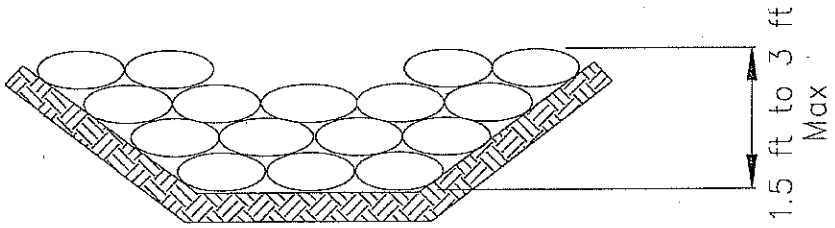

GRAVEL BAG CHECK DAM ELEVATION
NOT TO SCALE

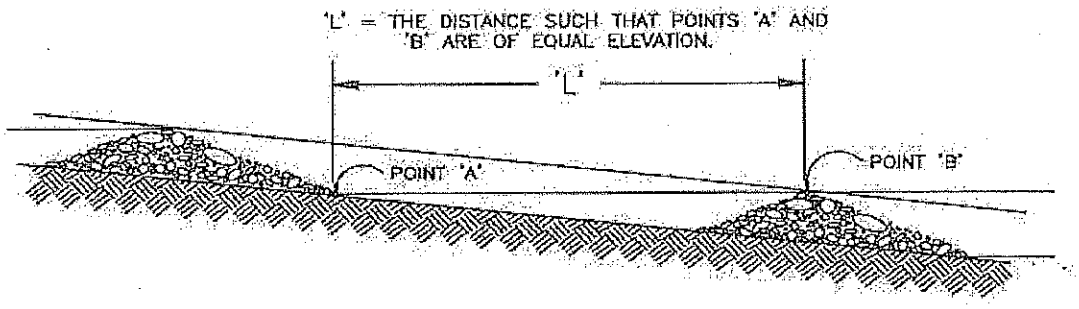

SPACING BETWEEN CHECK DAMS

Fiber Rolls

SE-5

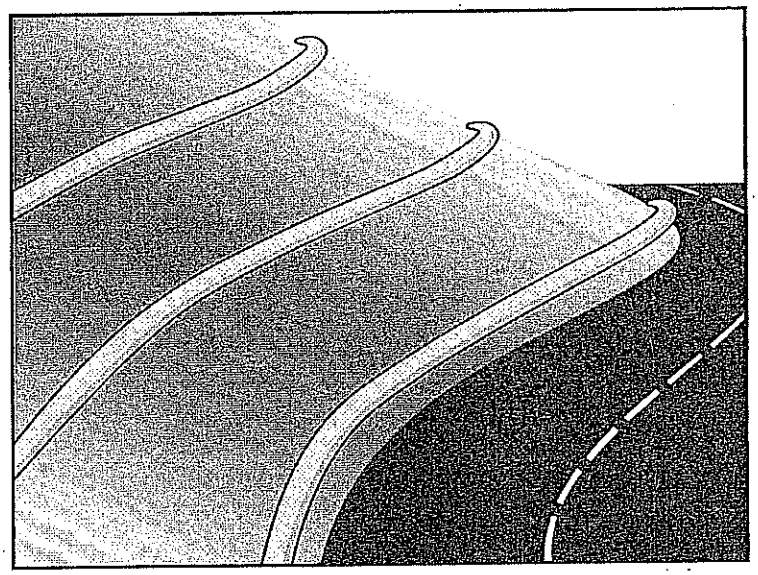

Categories

EC	Erosion Control	☒
SE	Sediment Control	☑
TC	Tracking Control	
WE	Wind Erosion Control	
NS	Non-Stormwater Management Control	
WM	Waste Management and Materials Pollution Control	

Legend:

☑ **Primary Category**

☒ **Secondary Category**

Targeted Constituents

Sediment	☑
Nutrients	
Trash	
Metals	
Bacteria	
Oil and Grease	
Organics	

Potential Alternatives

SE-1 Silt Fence

SE-6 Gravel Bag Berm

SE-8 Sandbag Barrier

SE-14 Biofilter Bags

Description and Purpose

A fiber roll consists of straw, coir, or other biodegradable materials bound into a tight tubular roll wrapped by netting, which can be photodegradable or natural. Additionally, gravel core fiber rolls are available, which contain an imbedded ballast material such as gravel or sand for additional weight when staking the rolls are not feasible (such as use as inlet protection). When fiber rolls are placed at the toe and on the face of slopes along the contours, they intercept runoff, reduce its flow velocity, release the runoff as sheet flow, and provide removal of sediment from the runoff (through sedimentation). By interrupting the length of a slope, fiber rolls can also reduce sheet and rill erosion until vegetation is established.

Suitable Applications

Fiber rolls may be suitable:

- Along the toe, top, face, and at grade breaks of exposed and erodible slopes to shorten slope length and spread runoff as sheet flow.
- At the end of a downward slope where it transitions to a steeper slope.
- Along the perimeter of a project.
- As check dams in unlined ditches with minimal grade.
- Down-slope of exposed soil areas.
- At operational storm drains as a form of inlet protection.

- Around temporary stockpiles.

Limitations

- Fiber rolls are not effective unless trenched in and staked.
- Not intended for use in high flow situations.
- Difficult to move once saturated.
- If not properly staked and trenched in, fiber rolls could be transported by high flows.
- Fiber rolls have a very limited sediment capture zone.
- Fiber rolls should not be used on slopes subject to creep, slumping, or landslide.
- Rolls typically function for 12-24 months depending upon local conditions.

Implementation

Fiber Roll Materials

- Fiber rolls should be prefabricated.
- Fiber rolls may come manufactured containing polyacrylamide (PAM), a flocculating agent within the roll. Fiber rolls impregnated with PAM provide additional sediment removal capabilities and should be used in areas with fine, clayey or silty soils to provide additional sediment removal capabilities. Monitoring may be required for these installations.
- Fiber rolls are made from weed free rice straw, flax, or a similar agricultural material bound into a tight tubular roll by netting.
- Typical fiber rolls vary in diameter from 9 in. to 20 in. Larger diameter rolls are available as well.

Installation

- Locate fiber rolls on level contours spaced as follows:
  - Slope inclination of 4:1 (H:V) or flatter: Fiber rolls should be placed at a maximum interval of 20 ft.
  - Slope inclination between 4:1 and 2:1 (H:V): Fiber Rolls should be placed at a maximum interval of 15 ft. (a closer spacing is more effective).
  - Slope inclination 2:1 (H:V) or greater: Fiber Rolls should be placed at a maximum interval of 10 ft. (a closer spacing is more effective).
- Prepare the slope before beginning installation.
- Dig small trenches across the slope on the contour. The trench depth should be ¼ to 1/3 of the thickness of the roll, and the width should equal the roll diameter, in order to provide area to backfill the trench.

- It is critical that rolls are installed perpendicular to water movement, and parallel to the slope contour.
- Start building trenches and installing rolls from the bottom of the slope and work up.
- It is recommended that pilot holes be driven through the fiber roll. Use a straight bar to drive holes through the roll and into the soil for the wooden stakes.
- Turn the ends of the fiber roll up slope to prevent runoff from going around the roll.
- Stake fiber rolls into the trench.
  - Drive stakes at the end of each fiber roll and spaced 4 ft maximum on center.
  - Use wood stakes with a nominal classification of 0.75 by 0.75 in. and minimum length of 24 in.
- If more than one fiber roll is placed in a row, the rolls should be overlapped, not abutted.
- See typical fiber roll installation details at the end of this fact sheet.

Removal

- Fiber rolls can be left in place or removed depending on the type of fiber roll and application (temporary vs. permanent installation). Typically, fiber rolls encased with plastic netting are used for a temporary application because the netting does not biodegrade. Fiber rolls used in a permanent application are typically encased with a biodegradeable material and are left in place. Removal of a fiber roll used in a permanent application can result in greater disturbance.
- Temporary installations should only be removed when up gradient areas are stabilized per General Permit requirements, and/or pollutant sources no longer present a hazard. But, they should also be removed before vegetation becomes too mature so that the removal process does not disturb more soil and vegetation than is necessary.

Costs

Material costs for regular fiber rolls range from $20 - $30 per 25 ft roll.

Material costs for PAM impregnated fiber rolls range between 7.00-$9.00 per linear foot, based upon vendor research.

Inspection and Maintenance

- BMPs must be inspected in accordance with General Permit requirements for the associated project type and risk level. It is recommended that at a minimum, BMPs be inspected weekly, prior to forecasted rain events, daily during extended rain events, and after the conclusion of rain events.
- Repair or replace split, torn, unraveling, or slumping fiber rolls.
- If the fiber roll is used as a sediment capture device, or as an erosion control device to maintain sheet flows, sediment that accumulates in the BMP should be periodically removed

in order to maintain BMP effectiveness. Sediment should be removed when sediment accumulation reaches one-third the designated sediment storage depth.

- If fiber rolls are used for erosion control, such as in a check dam, sediment removal should not be required as long as the system continues to control the grade. Sediment control BMPs will likely be required in conjunction with this type of application.
- Repair any rills or gullies promptly.

References

Stormwater Quality Handbooks - Construction Site Best Management Practices (BMPs) Manual, State of California Department of Transportation (Caltrans), March 2003.

Erosion and Sediment Control Manual, Oregon Department of Environmental Quality, February 2005.

Fiber Rolls

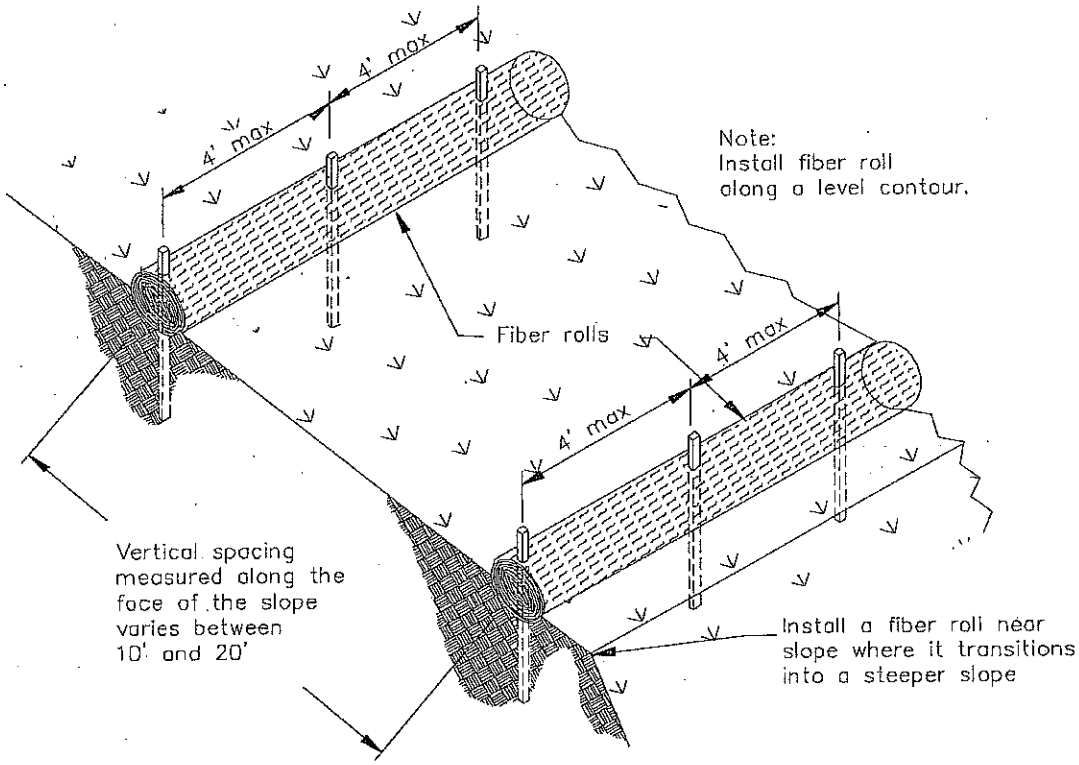

TYPICAL FIBER ROLL INSTALLATION

N.T.S.

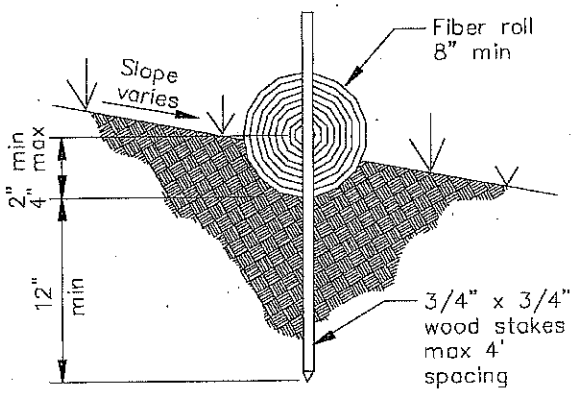

ENTRENCHMENT DETAIL

N.T.S.

Gravel Bag Berm

SE-6

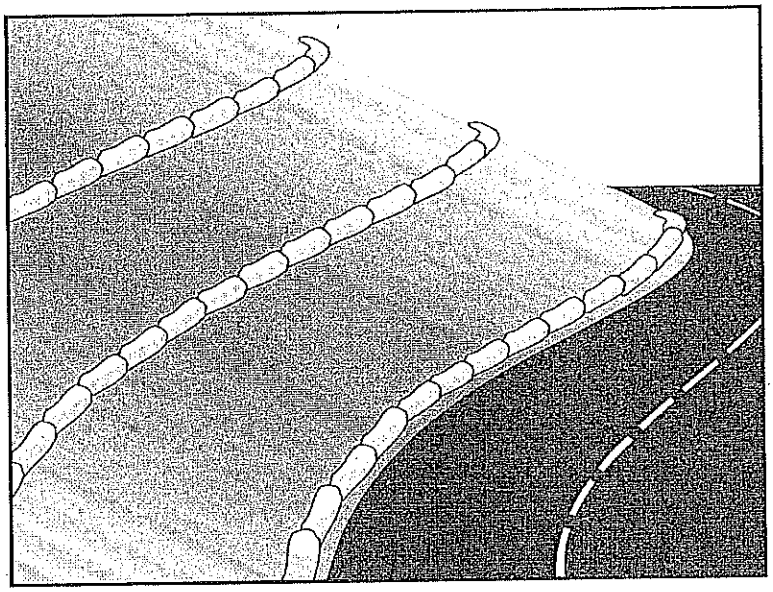

Categories

EC	Erosion Control	☒
SE	Sediment Control	☑
TC	Tracking Control	
WE	Wind Erosion Control	
NS	Non-Stormwater Management Control	
WM	Waste Management and Materials Pollution Control	

Legend:

☑ **Primary Category**

☒ **Secondary Category**

Targeted Constituents

Sediment	☑
Nutrients	
Trash	
Metals	
Bacteria	
Oil and Grease	
Organics	

Potential Alternatives

SE-1 Silt Fence

SE-5 Fiber Roll

SE-8 Sandbag Barrier

SE-14 Biofilter Bags

Description and Purpose

A gravel bag berm is a series of gravel-filled bags placed on a level contour to intercept sheet flows. Gravel bags pond sheet flow runoff, allowing sediment to settle out, and release runoff slowly as sheet flow, preventing erosion.

Suitable Applications

Gravel bag berms may be suitable:

- As a linear sediment control measure:
  - Below the toe of slopes and erodible slopes
  - As sediment traps at culvert/pipe outlets
  - Below other small cleared areas
  - Along the perimeter of a site
  - Down slope of exposed soil areas
  - Around temporary stockpiles and spoil areas
  - Parallel to a roadway to keep sediment off paved areas
  - Along streams and channels
- As a linear erosion control measure:
  - Along the face and at grade breaks of exposed and erodible slopes to shorten slope length and spread runoff as sheet flow.

- At the top of slopes to divert runoff away from disturbed slopes.
- As chevrons (small check dams) across mildly sloped construction roads. For use check dam use in channels, see SE-4, Check Dams.

Limitations

- Gravel berms may be difficult to remove.
- Removal problems limit their usefulness in landscaped areas.
- Gravel bag berm may not be appropriate for drainage areas greater than 5 acres.
- Runoff will pond upstream of the berm, possibly causing flooding if sufficient space does not exist.
- Degraded gravel bags may rupture when removed, spilling contents.
- Installation can be labor intensive.
- Durability of gravel bags is somewhat limited and bags may need to be replaced when installation is required for longer than 6 months.
- Easily damaged by construction equipment.
- When used to detain concentrated flows, maintenance requirements increase.

Implementation

General

A gravel bag berm consists of a row of open graded gravel-filled bags placed on a level contour. When appropriately placed, a gravel bag berm intercepts and slows sheet flow runoff, causing temporary ponding. The temporary ponding allows sediment to settle. The open graded gravel in the bags is porous, which allows the ponded runoff to flow slowly through the bags, releasing the runoff as sheet flows. Gravel bag berms also interrupt the slope length and thereby reduce erosion by reducing the tendency of sheet flows to concentrate into rivulets, which erode rills, and ultimately gullies, into disturbed, sloped soils. Gravel bag berms are similar to sand bag barriers, but are more porous. Generally, gravel bag berms should be used in conjunction with temporary soil stabilization controls up slope to provide effective erosion and sediment control.

Design and Layout

- Locate gravel bag berms on level contours.
- When used for slope interruption, the following slope/sheet flow length combinations apply:
  - Slope inclination of 4:1 (H:V) or flatter: Gravel bags should be placed at a maximum interval of 20 ft, with the first row near the slope toe.
  - Slope inclination between 4:1 and 2:1 (H:V): Gravel bags should be placed at a maximum interval of 15 ft. (a closer spacing is more effective), with the first row near the slope toe.

Slope inclination 2:1 (H:V) or greater: Gravel bags should be placed at a maximum interval of 10 ft. (a closer spacing is more effective), with the first row near the slope toe.

- Turn the ends of the gravel bag barriers up slope to prevent runoff from going around the berm.
- Allow sufficient space up slope from the gravel bag berm to allow ponding, and to provide room for sediment storage.
- For installation near the toe of the slope, gravel bag barriers should be set back from the slope toe to facilitate cleaning. Where specific site conditions do not allow for a set-back, the gravel bag barrier may be constructed on the toe of the slope. To prevent flows behind the barrier, bags can be placed perpendicular to a berm to serve as cross barriers.
- Drainage area should not exceed 5 acres.
- In Non-Traffic Areas:
  - Height = 18 in. maximum
  - Top width = 24 in. minimum for three or more layer construction
  - Top width = 12 in. minimum for one or two layer construction
  - Side slopes = 2:1 (H:V) or flatter
- In Construction Traffic Areas:
  - Height = 12 in. maximum
  - Top width = 24 in. minimum for three or more layer construction.
  - Top width = 12 in. minimum for one or two layer construction.
  - Side slopes = 2:1 (H:V) or flatter.
- Butt ends of bags tightly.
- On multiple row, or multiple layer construction, overlap butt joints of adjacent row and row beneath.
- Use a pyramid approach when stacking bags.

Materials

- ***Bag Material:*** Bags should be woven polypropylene, polyethylene or polyamide fabric or burlap, minimum unit weight of 4 ounces/yd^2, Mullen burst strength exceeding 300 lb/in^2 in conformance with the requirements in ASTM designation D3786, and ultraviolet stability exceeding 70% in conformance with the requirements in ASTM designation D4355.

Gravel Bag Berm SE-6

- ***Bag Size:*** Each gravel-filled bag should have a length of 18 in., width of 12 in., thickness of 3 in., and mass of approximately 33 lbs. Bag dimensions are nominal, and may vary based on locally available materials.

- ***Fill Material:*** Fill material should be 0.5 to 1 in. crushed rock, clean and free from clay, organic matter, and other deleterious material, or other suitable open graded, non-cohesive, porous gravel.

Costs

Material costs for gravel bags are average and are dependent upon material availability. $2.50-3.00 per filled gravel bag is standard based upon vendor research.

Inspection and Maintenance

- BMPs must be inspected in accordance with General Permit requirements for the associated project type and risk level. It is recommended that at a minimum, BMPs be inspected weekly, prior to forecasted rain events, daily during extended rain events, and after the conclusion of rain events.

- Gravel bags exposed to sunlight will need to be replaced every two to three months due to degrading of the bags.

- Reshape or replace gravel bags as needed.

- Repair washouts or other damage as needed.

- Sediment that accumulates in the BMP should be periodically removed in order to maintain BMP effectiveness. Sediment should be removed when the sediment accumulation reaches one-third of the barrier height.

- Remove gravel bag berms when no longer needed and recycle gravel fill whenever possible and properly dispose of bag material. Remove sediment accumulation and clean, re-grade, and stabilize the area.

References

Handbook of Steel Drainage and Highway Construction, American Iron and Steel Institute, 1983.

Stormwater Quality Handbooks - Construction Site Best Management Practices (BMPs) Manual, State of California Department of Transportation (Caltrans), March 2003.

Stormwater Pollution Plan Handbook, First Edition, State of California, Department of Transportation Division of New Technology, Materials and Research, October 1992.

Erosion and Sediment Control Manual, Oregon Department of Environmental Quality, February 2005.

Street Sweeping and Vacuuming SE-7

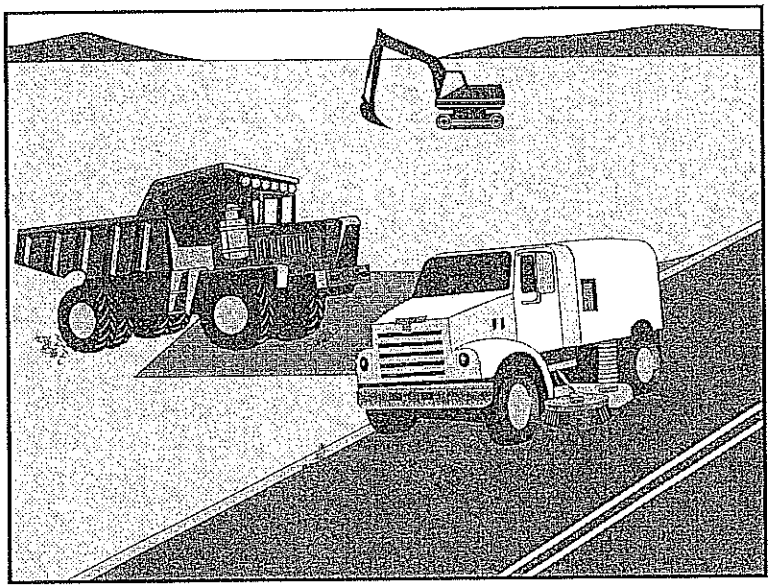

Categories		
EC	Erosion Control	
SE	Sediment Control	☒
TC	Tracking Control	☑
WE	Wind Erosion Control	
NS	Non-Stormwater Management Control	
WM	Waste Management and Materials Pollution Control	

Legend:

☑ **Primary Objective**

☒ **Secondary Objective**

Targeted Constituents	
Sediment	☑
Nutrients	
Trash	☑
Metals	
Bacteria	
Oil and Grease	☑
Organics	

Potential Alternatives

None

Description and Purpose

Street sweeping and vacuuming includes use of self-propelled and walk-behind equipment to remove sediment from streets and roadways, and to clean paved surfaces in preparation for final paving. Sweeping and vacuuming prevents sediment from the project site from entering storm drains or receiving waters.

Suitable Applications

Sweeping and vacuuming are suitable anywhere sediment is tracked from the project site onto public or private paved streets and roads, typically at points of egress. Sweeping and vacuuming are also applicable during preparation of paved surfaces for final paving.

Limitations

Sweeping and vacuuming may not be effective when sediment is wet or when tracked soil is caked (caked soil may need to be scraped loose).

Implementation

- Controlling the number of points where vehicles can leave the site will allow sweeping and vacuuming efforts to be focused, and perhaps save money.
- Inspect potential sediment tracking locations daily.
- Visible sediment tracking should be swept or vacuumed on a daily basis.
- Do not use kick brooms or sweeper attachments. These tend to spread the dirt rather than remove it.

CASQA
CALIFORNIA STORMWATER QUALITY ASSOCIATION

Street Sweeping and Vacuuming SE-7

- If not mixed with debris or trash, consider incorporating the removed sediment back into the project

Costs

Rental rates for self-propelled sweepers vary depending on hopper size and duration of rental. Expect rental rates from $58/hour (3 yd^3 hopper) to $88/hour (9 yd^3 hopper), plus operator costs. Hourly production rates vary with the amount of area to be swept and amount of sediment. Match the hopper size to the area and expect sediment load to minimize time spent dumping.

Inspection and Maintenance

- Inspect BMPs in accordance with General Permit requirements for the associated project type and risk level. It is recommended that at a minimum, BMPs be inspected weekly, prior to forecasted rain events, daily during extended rain events, and after the conclusion of rain events.
- When actively in use, points of ingress and egress must be inspected daily.
- When tracked or spilled sediment is observed outside the construction limits, it must be removed at least daily. More frequent removal, even continuous removal, may be required in some jurisdictions.
- Be careful not to sweep up any unknown substance or any object that may be potentially hazardous.
- Adjust brooms frequently; maximize efficiency of sweeping operations.
- After sweeping is finished, properly dispose of sweeper wastes at an approved dumpsite.

References

Stormwater Quality Handbooks - Construction Site Best Management Practices (BMPs) Manual, State of California Department of Transportation (Caltrans), November 2000.

Labor Surcharge and Equipment Rental Rates, State of California Department of Transportation (Caltrans), April 1, 2002 – March 31, 2003.

Storm Drain Inlet Protection SE-10

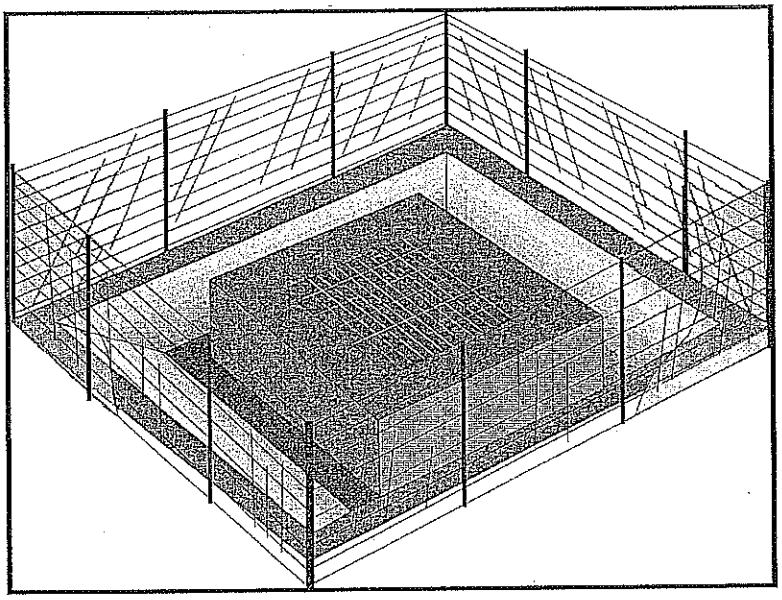

Categories

EC	Erosion Control	
SE	Sediment Control	☑
TC	Tracking Control	
WE	Wind Erosion Control	
NS	Non-Stormwater Management Control	
WM	Waste Management and Materials Pollution Control	

Legend:

☑ **Primary Category**

☒ **Secondary Category**

Targeted Constituents

Sediment	☑
Nutrients	
Trash	☒
Metals	
Bacteria	
Oil and Grease	
Organics	

Potential Alternatives

SE-1 Silt Fence

SE-5 Fiber Rolls

SE-6 Gravel Bag Berm

SE-8 Sandbag Barrier

SE-14 Biofilter Bags

Description and Purpose

Storm drain inlet protection consists of a sediment filter or an impounding area in, around or upstream of a storm drain, drop inlet, or curb inlet. Storm drain inlet protection measures temporarily pond runoff before it enters the storm drain, allowing sediment to settle. Some filter configurations also remove sediment by filtering, but usually the ponding action results in the greatest sediment reduction. Temporary geotextile storm drain inserts attach underneath storm drain grates to capture and filter storm water.

Suitable Applications

Every storm drain inlet receiving runoff from unstabilized or otherwise active work areas should be protected. Inlet protection should be used in conjunction with other erosion and sediment controls to prevent sediment-laden stormwater and non-stormwater discharges from entering the storm drain system.

Limitations

- Drainage area should not exceed 1 acre.
- In general straw bales should not be used as inlet protection.
- Requires an adequate area for water to pond without encroaching into portions of the roadway subject to traffic.

- Sediment removal may be inadequate to prevent sediment discharges in high flow conditions or if runoff is heavily sediment laden. If high flow conditions are expected, use other onsite sediment trapping techniques in conjunction with inlet protection.
- Frequent maintenance is required.
- Limit drainage area to 1 acre maximum. For drainage areas larger than 1 acre, runoff should be routed to a sediment-trapping device designed for larger flows. See BMPs SE-2, Sediment Basin, and SE-3, Sediment Traps.
- Excavated drop inlet sediment traps are appropriate where relatively heavy flows are expected, and overflow capability is needed.

Implementation

General

Inlet control measures presented in this handbook should not be used for inlets draining more than one acre. Runoff from larger disturbed areas should be first routed through SE-2, Sediment Basin or SE-3, Sediment Trap and/or used in conjunction with other drainage control, erosion control, and sediment control BMPs to protect the site. Different types of inlet protection are appropriate for different applications depending on site conditions and the type of inlet. Alternative methods are available in addition to the methods described/shown herein such as prefabricated inlet insert devices, or gutter protection devices.

Design and Layout

Identify existing and planned storm drain inlets that have the potential to receive sediment-laden surface runoff. Determine if storm drain inlet protection is needed and which method to use.

- The key to successful and safe use of storm drain inlet protection devices is to know where runoff that is directed toward the inlet to be protected will pond or be diverted as a result of installing the protection device.
  - Determine the acceptable location and extent of ponding in the vicinity of the drain inlet. The acceptable location and extent of ponding will influence the type and design of the storm drain inlet protection device.
  - Determine the extent of potential runoff diversion caused by the storm drain inlet protection device. Runoff ponded by inlet protection devices may flow around the device and towards the next downstream inlet. In some cases, this is acceptable; in other cases, serious erosion or downstream property damage can be caused by these diversions. The possibility of runoff diversions will influence whether or not storm drain inlet protection is suitable; and, if suitable, the type and design of the device.
- The location and extent of ponding, and the extent of diversion, can usually be controlled through appropriate placement of the inlet protection device. In some cases, moving the inlet protection device a short distance upstream of the actual inlet can provide more efficient sediment control, limit ponding to desired areas, and prevent or control diversions.

Storm Drain Inlet Protection SE-10

- Six types of inlet protection are presented below. However, it is recognized that other effective methods and proprietary devices exist and may be selected.
  - Silt Fence: Appropriate for drainage basins with less than a 5% slope, sheet flows, and flows under 0.5 cfs.
  - Excavated Drop Inlet Sediment Trap: An excavated area around the inlet to trap sediment (SE-3).
  - Gravel bag barrier: Used to create a small sediment trap upstream of inlets on sloped, paved streets. Appropriate for sheet flow or when concentrated flow may exceed 0.5 cfs, and where overtopping is required to prevent flooding.
  - Block and Gravel Filter: Appropriate for flows greater than 0.5 cfs.
  - Temporary Geotextile Storm drain Inserts: Different products provide different features. Refer to manufacturer details for targeted pollutants and additional features.
  - Biofilter Bag Barrier: Used to create a small retention area upstream of inlets and can be located on pavement or soil. Biofilter bags slowly filter runoff allowing sediment to settle out. Appropriate for flows under 0.5 cfs.
- Select the appropriate type of inlet protection and design as referred to or as described in this fact sheet.
- Provide area around the inlet for water to pond without flooding structures and property.
- Grates and spaces around all inlets should be sealed to prevent seepage of sediment-laden water.
- Excavate sediment sumps (where needed) 1 to 2 ft with 2:1 side slopes around the inlet.

Installation

- ***DI Protection Type 1 - Silt Fence*** - Similar to constructing a silt fence; see BMP SE-1, Silt Fence. Do not place fabric underneath the inlet grate since the collected sediment may fall into the drain inlet when the fabric is removed or replaced and water flow through the grate will be blocked resulting in flooding. See typical Type 1 installation details at the end of this fact sheet.

  1. Excavate a trench approximately 6 in. wide and 6 in. deep along the line of the silt fence inlet protection device.
  2. Place 2 in. by 2 in. wooden stakes around the perimeter of the inlet a maximum of 3 ft apart and drive them at least 18 in. into the ground or 12 in. below the bottom of the trench. The stakes should be at least 48 in.
  3. Lay fabric along bottom of trench, up side of trench, and then up stakes. See SE-1, Silt Fence, for details. The maximum silt fence height around the inlet is 24 in.
  4. Staple the filter fabric (for materials and specifications, see SE-1, Silt Fence) to wooden stakes. Use heavy-duty wire staples at least 1 in. in length.

5. Backfill the trench with gravel or compacted earth all the way around.

- ***DI Protection Type 2 - Excavated Drop Inlet Sediment Trap*** - Install filter fabric fence in accordance with DI Protection Type 1. Size excavated trap to provide a minimum storage capacity calculated at the rate 67 yd^3/acre of drainage area. See typical Type 2 installation details at the end of this fact sheet.

- ***DI Protection Type 3 - Gravel bag*** - Flow from a severe storm should not overtop the curb. In areas of high clay and silts, use filter fabric and gravel as additional filter media. Construct gravel bags in accordance with SE-6, Gravel Bag Berm. Gravel bags should be used due to their high permeability. See typical Type 3 installation details at the end of this fact sheet.

  1. Construct on gently sloping street.
  2. Leave room upstream of barrier for water to pond and sediment to settle.
  3. Place several layers of gravel bags – overlapping the bags and packing them tightly together.
  4. Leave gap of one bag on the top row to serve as a spillway. Flow from a severe storm (e.g., 10 year storm) should not overtop the curb.

- ***DI Protection Type 4 – Block and Gravel Filter*** - Block and gravel filters are suitable for curb inlets commonly used in residential, commercial, and industrial construction. See typical Type 4 installation details at the end of this fact sheet.

  1. Place hardware cloth or comparable wire mesh with 0.5 in. openings over the drop inlet so that the wire extends a minimum of 1 ft beyond each side of the inlet structure. If more than one strip is necessary, overlap the strips. Place woven geotextile over the wire mesh.
  2. Place concrete blocks lengthwise on their sides in a single row around the perimeter of the inlet, so that the open ends face outward, not upward. The ends of adjacent blocks should abut. The height of the barrier can be varied, depending on design needs, by stacking combinations of blocks that are 4 in., 8 in., and 12 in. wide. The row of blocks should be at least 12 in. but no greater than 24 in. high.
  3. Place wire mesh over the outside vertical face (open end) of the concrete blocks to prevent stone from being washed through the blocks. Use hardware cloth or comparable wire mesh with 0.5 in. opening.
  4. Pile washed stone against the wire mesh to the top of the blocks. Use 0.75 to 3 in.

- ***DI Protection Type 5 – Temporary Geotextile Insert (proprietary)*** – Many types of temporary inserts are available. Most inserts fit underneath the grate of a drop inlet or inside of a curb inlet and are fastened to the outside of the grate or curb. These inserts are removable and many can be cleaned and reused. Installation of these inserts differs between manufacturers. Please refer to manufacturer instruction for installation of proprietary devices.

Storm Drain Inlet Protection SE-10

- ***DI Protection Type 6 - Biofilter bags*** – Biofilter bags may be used as a substitute for gravel bags in low-flow situations. Biofilter bags should conform to specifications detailed in SE-14, Biofilter bags.

  1. Construct in a gently sloping area.
  2. Biofilter bags should be placed around inlets to intercept runoff flows.
  3. All bag joints should overlap by 6 in.
  4. Leave room upstream for water to pond and for sediment to settle out.
  5. Stake bags to the ground as described in the following detail. Stakes may be omitted if bags are placed on a paved surface.

Costs

- Average annual cost for installation and maintenance of DI Type 1-4 and 6 (one year useful life) is $200 per inlet.
- Temporary geotextile inserts are proprietary and cost varies by region. These inserts can often be reused and may have greater than 1 year of use if maintained and kept undamaged. Average cost per insert ranges from $50-75 plus installation, but costs can exceed $100. This cost does not include maintenance.

Inspection and Maintenance

- BMPs must be inspected in accordance with General Permit requirements for the associated project type and risk level. It is recommended that at a minimum, BMPs be inspected weekly, prior to forecasted rain events, daily during extended rain events, and after the conclusion of rain events.
- Silt Fences. If the fabric becomes clogged, torn, or degrades, it should be replaced. Make sure the stakes are securely driven in the ground and are in good shape (i.e., not bent, cracked, or splintered, and are reasonably perpendicular to the ground). Replace damaged stakes. At a minimum, remove the sediment behind the fabric fence when accumulation reaches one-third the height of the fence or barrier height.
- Gravel Filters. If the gravel becomes clogged with sediment, it should be carefully removed from the inlet and either cleaned or replaced. Since cleaning gravel at a construction site may be difficult, consider using the sediment-laden stone as fill material and put fresh stone around the inlet. Inspect bags for holes, gashes, and snags, and replace bags as needed. Check gravel bags for proper arrangement and displacement.
- Sediment that accumulates in the BMP should be periodically removed in order to maintain BMP effectiveness. Sediment should be removed when the sediment accumulation reaches one-third of the barrier height.
- Inspect and maintain temporary geotextile insert devices according to manufacturer's specifications.
- Remove storm drain inlet protection once the drainage area is stabilized.

- Clean and regrade area around the inlet and clean the inside of the storm drain inlet, as it should be free of sediment and debris at the time of final inspection.

References

Stormwater Quality Handbooks - Construction Site Best Management Practices (BMPs) Manual, State of California Department of Transportation (Caltrans), March 2003.

Stormwater Management Manual for The Puget Sound Basin, Washington State Department of Ecology, Public Review Draft, 1991.

Erosion and Sediment Control Manual, Oregon Department of Environmental Quality, February 2005.

Storm Drain Inlet Protection SE-10

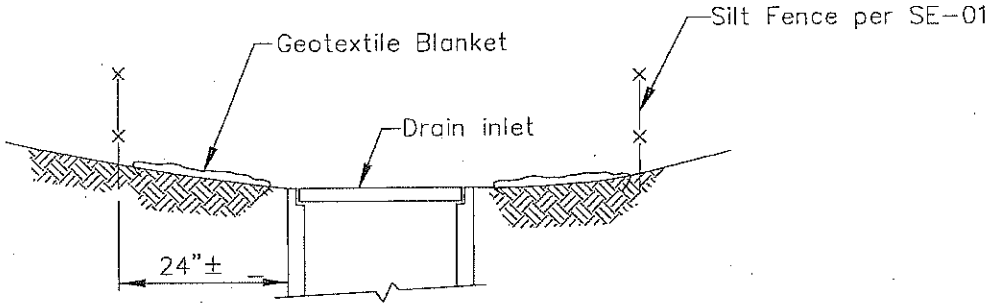

SECTION A–A

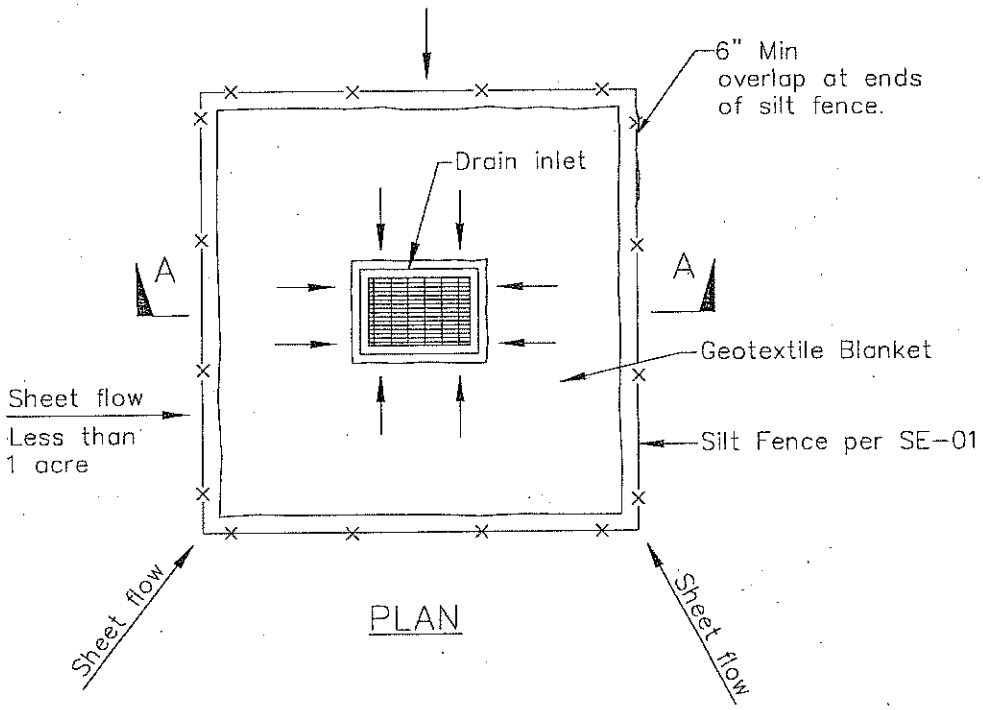

PLAN

DI PROTECTION TYPE 1
NOT TO SCALE

NOTES:

1. For use in areas where grading has been completed and final soil stabilization and seeding are pending.
2. Not applicable in paved areas.
3. Not applicable with concentrated flows.

Storm Drain Inlet Protection SE-10

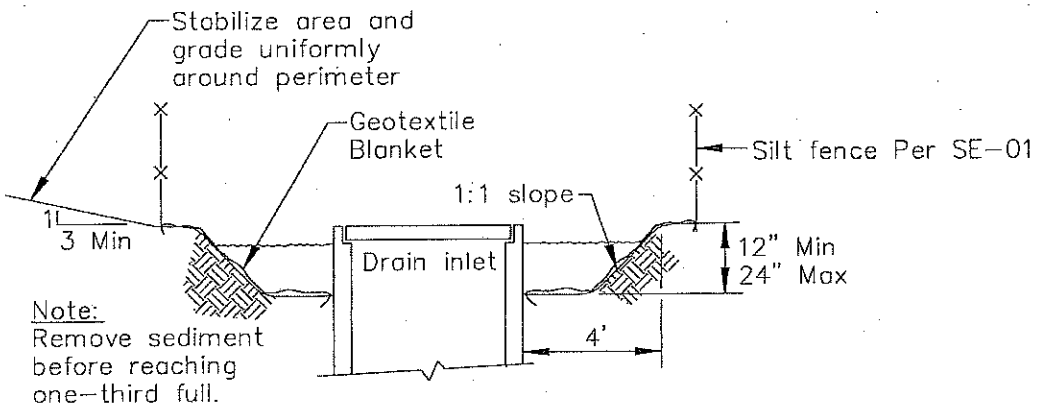

Section A–A

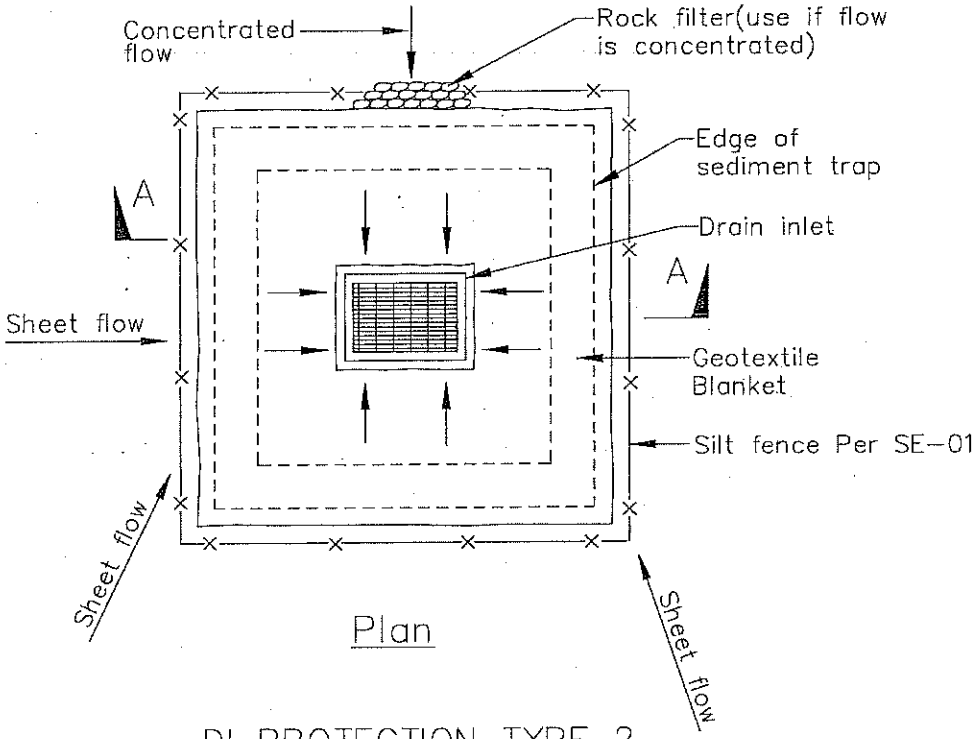

Plan

DI PROTECTION TYPE 2
NOT TO SCALE

Notes
1. For use in cleared and grubbed and in graded areas.
2. Shape basin so that longest inflow area faces longest length of trap.
3. For concentrated flows, shape basin in 2:1 ratio with length oriented towards direction of flow.

Storm Drain Inlet Protection SE-10

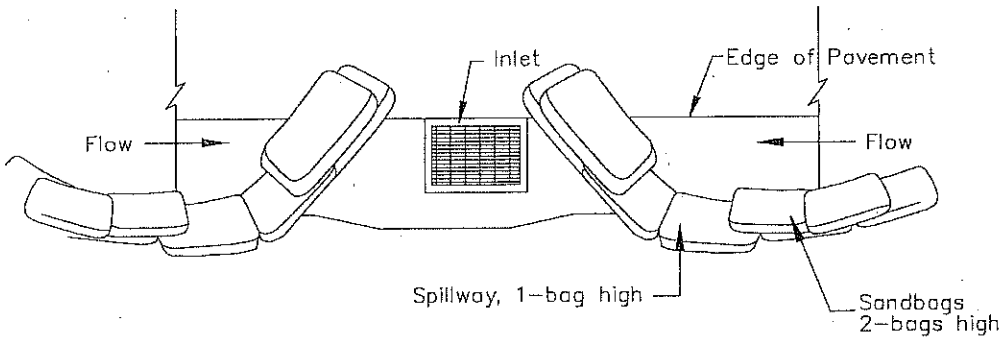

TYPICAL PROTECTION FOR INLET ON SUMP

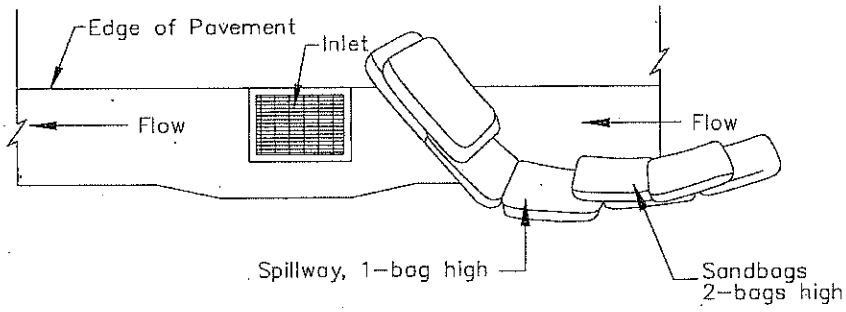

TYPICAL PROTECTION FOR INLET ON GRADE

NOTES:
1. Intended for short-term use.
2. Use to inhibit non-storm water flow.
3. Allow for proper maintenance and cleanup.
4. Bags must be removed after adjacent operation is completed
5. Not applicable in areas with high silts and clays without filter fabric.

DI PROTECTION TYPE 3
NOT TO SCALE

Storm Drain Inlet Protection SE-10

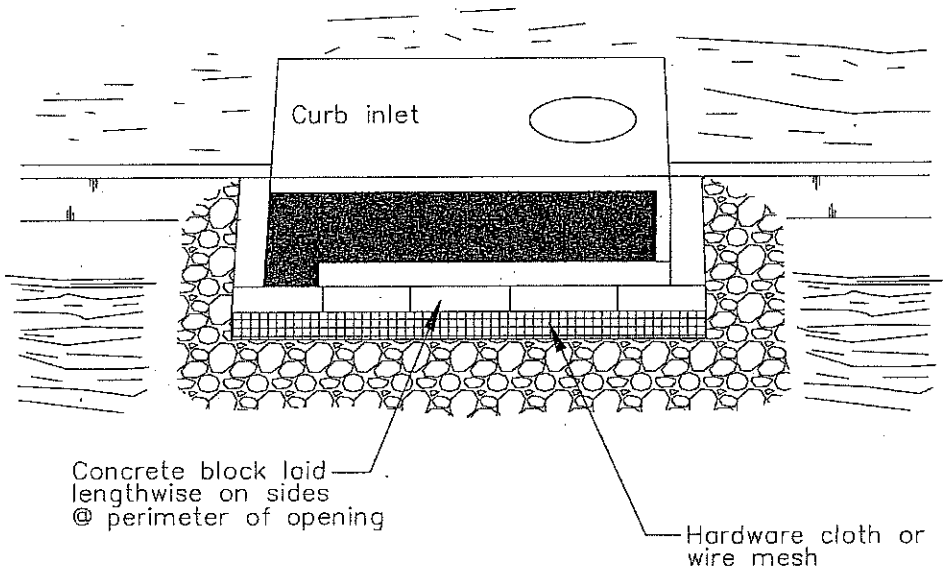

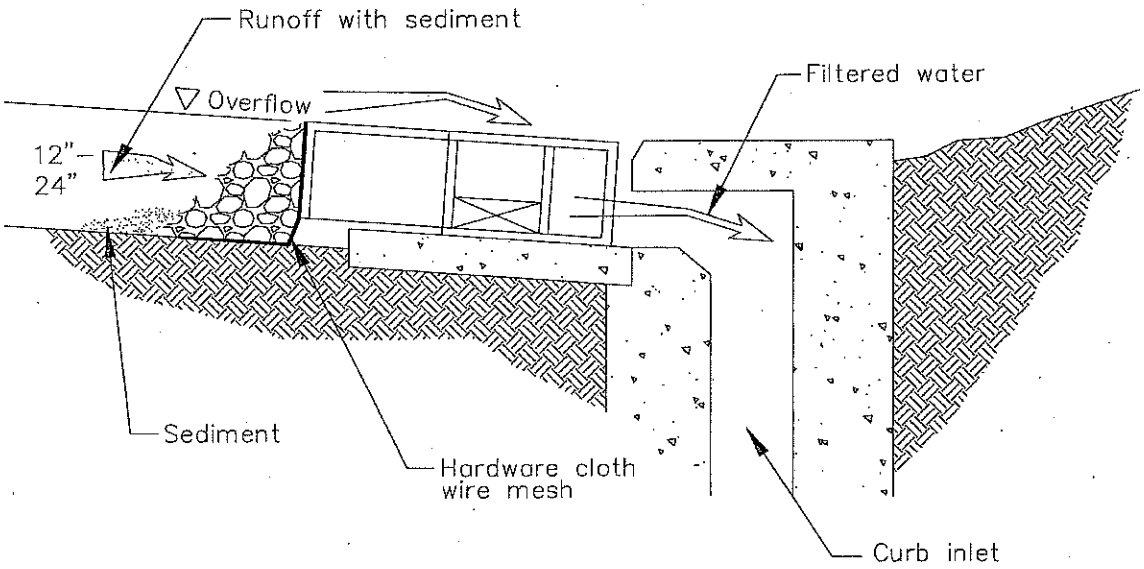

DI PROTECTION – TYPE 4

NOT TO SCALE

Biofilter Bags

SE-14

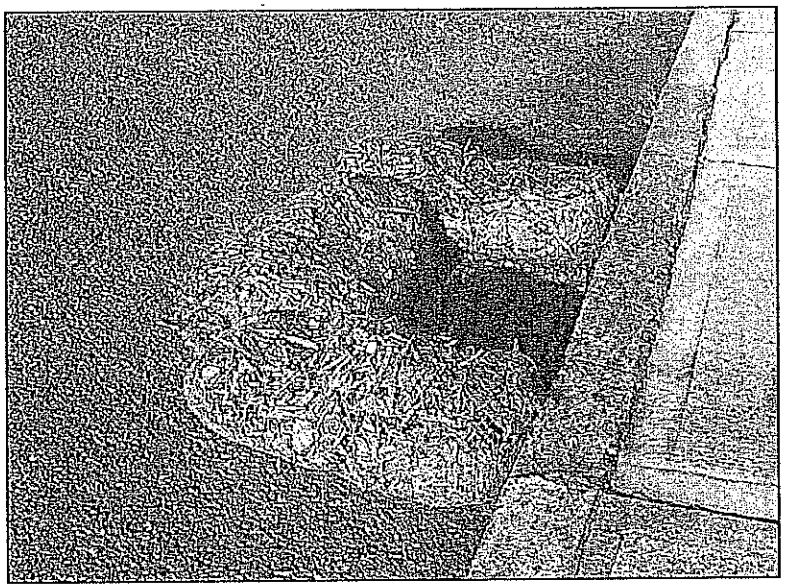

Categories

EC	Erosion Control	
SE	Sediment Control	☑
TR	Tracking Control	
WE	Wind Erosion Control	
NS	Non-Stormwater Management Control	
WM	Waste Management and Materials Pollution Control	

Legend:

☑ **Primary Category**

☒ **Secondary Category**

Targeted Constituents

Sediment	☑
Nutrients	
Trash	
Metals	
Bacteria	
Oil and Grease	
Organics	

Potential Alternatives

SE-1 Silt Fence

SE-4 Check Dams

SE-5 Fiber Roll

SE-6 Gravel Bag Berm

SE-8 Sandbag Barrier

SE-10 Storm Drain Inlet Protection

Description and Purpose

Biofilter bags, or bio-bags, are a multi-purpose sediment control BMP consisting of a plastic mesh bag filled with 100% recycled wood product waste. Biofilter bags come in a variety of sizes (30" X 18" and 30" X 9" being common) and generally have between 1-2 cubic yards of recycled wood waste (or wood chips). Biofilter bags work by detaining flow and allowing a slow rate of discharge through the wood media. This action removes suspended sediment through gravity settling of the detained water and filtration within the bag.

Suitable Applications

Biofilter bags are a short-term BMP that can be rapidly deployed, maintained, and replaced. Biofilter bags can be an effective short-term solution to place in developed rills to prevent further erosion until permanent measures can be established. Suitable short-term applications include:

- As a linear sediment control measure:
  - Below the toe of slopes and erodible slopes
  - Below other small cleared areas
  - Along the perimeter of a site (with low-expected flow)
  - Down slope of exposed soil areas
  - Around temporary stockpiles and spoil areas
  - Parallel to a roadway to keep sediment off paved areas

- Along streams and channels

- As linear erosion control measure:
  - Along the face and at grade breaks of exposed and erodible slopes to shorten slope length and spread runoff as sheet flow
  - At the top of slopes to divert runoff away from disturbed slopes
  - As check dams across mildly sloped construction roads
- Inlet Protection (See SE-10)
- Supplement to silt fences or other sediment control devices

Limitations

- Short life-span (2-3 months); regular maintenance and replacement required to ensure effectiveness. Bags will rapidly fill with sediment and reduce permeability.
- Easily damaged by construction vehicles.
- If not properly staked, will fail on slope applications.
- If improperly installed can allow undercutting or side-cutting flow.
- Not effective where water velocities or volumes are high.
- Potentially buoyant and easily displaced if not properly installed.

Implementation

General

Biofilter bags are a relatively low cost temporary BMP that are easily deployed and have a simple installation that can be performed by hand. Without proper installation, however, biofilter bags can fail due to their light weight, potential displacement, and multiple joint locations. One of the benefits of utilizing biofilter bags is that the media (wood-product) can be recycled or used onsite when no longer needed (where acceptable).

Design and Layout – Linear control

- Locate biofilter bags on level contours.
  - Slopes between 20:1 and 4:1 (H:V): Biofilter bags should be placed at a maximum interval of 20 ft, with the first row near the slope toe.
  - Slopes between 4:1 and 2:1 (H:V): Biofilter bags should be placed at a maximum interval of 15 ft, with the first row near the slope toe.
  - Slopes 2:1 (H:V) or steeper: Biofilter bags should be placed at a maximum interval of 10 ft., with the first row placed the slope toe.

- Turn the ends of the biofilter bag barriers up slope to prevent runoff from going around the berm.
- Allow sufficient space up slope from the biofilter bag berm to allow ponding, and to provide room for sediment storage.
- Stake biofilter bags into a 1 to 2 in. deep trench with a width equal to the bag.
  - Drive one stake at each end of the bag.
  - Use wood stakes with a nominal classification of 0.75 by 0.75 in. and minimum length of 24 in.
- Biofilter bags should be overlapped (6 in.), not abutted.

Costs

Pre-filled biofilter bags cost approximately $2.50-$3.50 per bag, dependent upon size.

Inspection and Maintenance

- BMPs must be inspected in accordance with General Permit requirements for the associated project type and risk level. It is recommended that at a minimum, BMPs be inspected weekly, prior to forecasted rain events, daily during extended rain events, and after the conclusion of rain events.
- Biofilter bags exposed to sunlight will need to be replaced every two to three months due to degrading of the bags.
- Reshape or replace biofilter bags as needed.
- Repair washouts or other damage as needed.
- Sediment that is retained by the BMP should be periodically removed in order to maintain BMP effectiveness. Sediment should be removed when the sediment accumulation reaches one-third of the barrier height.
- Remove biofilter bag berms when no longer needed. Remove sediment accumulation and clean, re-grade, and stabilize the area. Biofilter media may be used on-site, if allowed.

References

Catalog of Stormwater Best Management Practices for Idaho Cities and Counties. Volume 2, Section 7, BMP 34 – Biofilter Bags, Idaho Department of Environmental Quality, 2005.

Erosion and Sediment Control Manual, Oregon Department of Environmental Quality, February 2005.

Stormwater Quality Handbooks Construction Site Best Management Practices (BMPs) Manual, State of California Department of Transportation (Caltrans), March 2003.

Wind Erosion Control WE-1

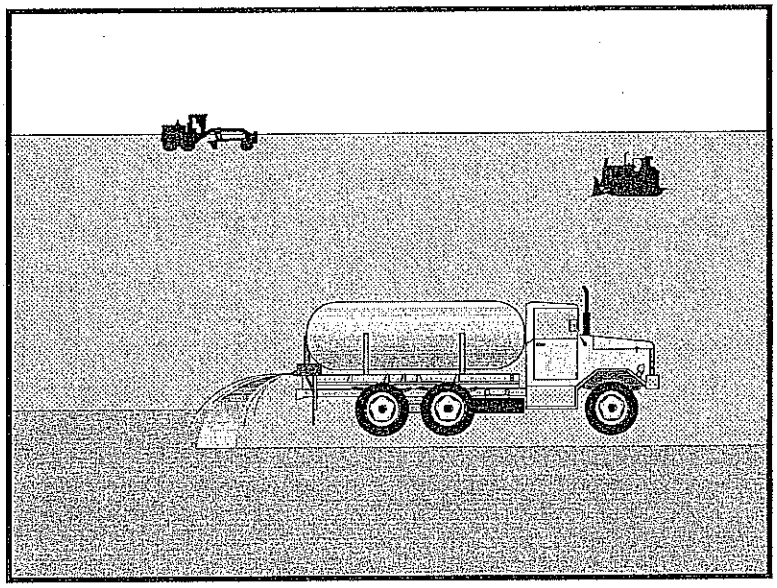

Categories

EC	Erosion Control	
SE	Sediment Control	☒
TC	Tracking Control	
WE	Wind Erosion Control	☑
NS	Non-Stormwater Management Control	
WM	Waste Management and Materials Pollution Control	

Legend:

☑ **Primary Category**

☒ **Secondary Category**

Targeted Constituents

Sediment	☑
Nutrients	
Trash	
Metals	
Bacteria	
Oil and Grease	
Organics	

Potential Alternatives

EC-5 Soil Binders

Description and Purpose

Wind erosion or dust control consists of applying water or other chemical dust suppressants as necessary to prevent or alleviate dust nuisance generated by construction activities. Covering small stockpiles or areas is an alternative to applying water or other dust palliatives.

California's Mediterranean climate, with a short "wet" season and a typically long, hot "dry" season, allows the soils to thoroughly dry out. During the dry season, construction activities are at their peak, and disturbed and exposed areas are increasingly subject to wind erosion, sediment tracking and dust generated by construction equipment. Site conditions and climate can make dust control more of an erosion problem than water based erosion. Additionally, many local agencies, including Air Quality Management Districts, require dust control and/or dust control permits in order to comply with local nuisance laws, opacity laws (visibility impairment) and the requirements of the Clean Air Act. Wind erosion control is required to be implemented at all construction sites greater than 1 acre by the General Permit.

Suitable Applications

Most BMPs that provide protection against water-based erosion will also protect against wind-based erosion and dust control requirements required by other agencies will generally meet wind erosion control requirements for water quality protection. Wind erosion control BMPs are suitable during the following construction activities:

Wind Erosion Control WE-1

- Construction vehicle traffic on unpaved roads
- Drilling and blasting activities
- Soils and debris storage piles
- Batch drop from front-end loaders
- Areas with unstabilized soil
- Final grading/site stabilization

Limitations

- Watering prevents dust only for a short period (generally less than a few hours) and should be applied daily (or more often) to be effective.
- Over watering may cause erosion and track-out.
- Oil or oil-treated subgrade should not be used for dust control because the oil may migrate into drainageways and/or seep into the soil.
- Chemical dust suppression agents may have potential environmental impacts. Selected chemical dust control agents should be environmentally benign.
- Effectiveness of controls depends on soil, temperature, humidity, wind velocity and traffic.
- Chemical dust suppression agents should not be used within 100 feet of wetlands or water bodies.
- Chemically treated subgrades may make the soil water repellant, interfering with long-term infiltration and the vegetation/re-vegetation of the site. Some chemical dust suppressants may be subject to freezing and may contain solvents and should be handled properly.
- In compacted areas, watering and other liquid dust control measures may wash sediment or other constituents into the drainage system.
- If the soil surface has minimal natural moisture, the affected area may need to be pre-wetted so that chemical dust control agents can uniformly penetrate the soil surface.

Implementation

Dust Control Practices

Dust control BMPs generally stabilize exposed surfaces and minimize activities that suspend or track dust particles. The following table presents dust control practices that can be applied to varying site conditions that could potentially cause dust. For heavily traveled and disturbed areas, wet suppression (watering), chemical dust suppression, gravel asphalt surfacing, temporary gravel construction entrances, equipment wash-out areas, and haul truck covers can be employed as dust control applications. Permanent or temporary vegetation and mulching can be employed for areas of occasional or no construction traffic. Preventive measures include minimizing surface areas to be disturbed, limiting onsite vehicle traffic to 15 mph or less, and controlling the number and activity of vehicles on a site at any given time.

Wind Erosion Control WE-1

Chemical dust suppressants include: mulch and fiber based dust palliatives (e.g. paper mulch with gypsum binder), salts and brines (e.g. calcium chloride, magnesium chloride), non-petroleum based organics (e.g. vegetable oil, lignosulfonate), petroleum based organics (e.g. asphalt emulsion, dust oils, petroleum resins), synthetic polymers (e.g. polyvinyl acetate, vinyls, acrylic), clay additives (e.g. bentonite, montimorillonite) and electrochemical products (e.g. enzymes, ionic products).

Site Condition	Dust Control Practices							
	Permanent Vegetation	Mulching	Wet Suppression (Watering)	Chemical Dust Suppression	Gravel or Asphalt	Temporary Gravel Construction Entrances/Equipment Wash Down	Synthetic Covers	Minimize Extent of Disturbed Area
Disturbed Areas not Subject to Traffic	x	x	x	x	x			x
Disturbed Areas Subject to Traffic			x	x	x	x		x
Material Stockpiles		x	x	x			x	x
Demolition			x			x	x	
Clearing/ Excavation			x	x				x
Truck Traffic on Unpaved Roads			x	x	x	x	x	
Tracking					x	x		

Additional preventive measures include:

- Schedule construction activities to minimize exposed area (see EC-1, Scheduling).
- Quickly treat exposed soils using water, mulching, chemical dust suppressants, or stone/gravel layering.
- Identify and stabilize key access points prior to commencement of construction.
- Minimize the impact of dust by anticipating the direction of prevailing winds.
- Restrict construction traffic to stabilized roadways within the project site, as practicable.
- Water should be applied by means of pressure-type distributors or pipelines equipped with a spray system or hoses and nozzles that will ensure even distribution.
- All distribution equipment should be equipped with a positive means of shutoff.
- Unless water is applied by means of pipelines, at least one mobile unit should be available at all times to apply water or dust palliative to the project.
- If reclaimed waste water is used, the sources and discharge must meet California Department of Health Services water reclamation criteria and the Regional Water Quality

Control Board (RWQCB) requirements. Non-potable water should not be conveyed in tanks or drain pipes that will be used to convey potable water and there should be no connection between potable and non-potable supplies. Non-potable tanks, pipes, and other conveyances should be marked, "NON-POTABLE WATER - DO NOT DRINK."

- Pave or chemically stabilize access points where unpaved traffic surfaces adjoin paved roads.
- Provide covers for haul trucks transporting materials that contribute to dust.
- Provide for rapid clean up of sediments deposited on paved roads. Furnish stabilized construction road entrances and wheel wash areas.
- Stabilize inactive areas of construction sites using temporary vegetation or chemical stabilization methods.

For chemical stabilization, there are many products available for chemically stabilizing gravel roadways and stockpiles. If chemical stabilization is used, the chemicals should not create any adverse effects on stormwater, plant life, or groundwater and should meet all applicable regulatory requirements.

Costs

Installation costs for water and chemical dust suppression vary based on the method used and the length of effectiveness. Annual costs may be high since some of these measures are effective for only a few hours to a few days.

Inspection and Maintenance

- Inspect and verify that activity-based BMPs are in place prior to the commencement of associated activities.
- BMPs must be inspected in accordance with General Permit requirements for the associated project type and risk level. It is recommended that at a minimum, BMPs be inspected weekly, prior to forecasted rain events, daily during extended rain events, and after the conclusion of rain events.
- Check areas protected to ensure coverage.
- Most water-based dust control measures require frequent application, often daily or even multiple times per day. Obtain vendor or independent information on longevity of chemical dust suppressants.

References

Best Management Practices and Erosion Control Manual for Construction Sites, Flood Control District of Maricopa County, Arizona, September 1992.

California Air Pollution Control Laws, California Air Resources Board, updated annually.

Construction Manual, Chapter 4, Section 10, "Dust Control"; Section 17, "Watering"; and Section 18, "Dust Palliative", California Department of Transportation (Caltrans), July 2001.

Prospects for Attaining the State Ambient Air Quality Standards for Suspended Particulate Matter (PM10), Visibility Reducing Particles, Sulfates, Lead, and Hydrogen Sulfide, California Air Resources Board, April 1991.

Stormwater Quality Handbooks Construction Site Best Management Practices (BMPs) Manual, State of California Department of Transportation (Caltrans), March 2003.

Stabilized Construction Entrance/Exit TC-1

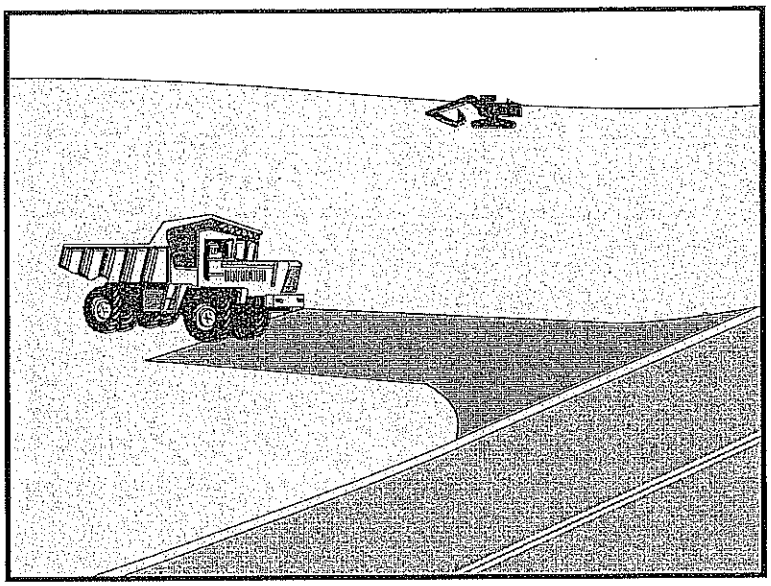

Categories

EC	Erosion Control	☒
SE	Sediment Control	☒
TC	Tracking Control	☑
WE	Wind Erosion Control	
NS	Non-Stormwater Management Control	
WM	Waste Management and Materials Pollution Control	

Legend:

☑ **Primary Objective**

☒ **Secondary Objective**

Targeted Constituents

Sediment	☑
Nutrients	
Trash	
Metals	
Bacteria	
Oil and Grease	
Organics	

Potential Alternatives

None

Description and Purpose

A stabilized construction access is defined by a point of entrance/exit to a construction site that is stabilized to reduce the tracking of mud and dirt onto public roads by construction vehicles.

Suitable Applications

Use at construction sites:

- Where dirt or mud can be tracked onto public roads.
- Adjacent to water bodies.
- Where poor soils are encountered.
- Where dust is a problem during dry weather conditions.

Limitations

- Entrances and exits require periodic top dressing with additional stones.
- This BMP should be used in conjunction with street sweeping on adjacent public right of way.
- Entrances and exits should be constructed on level ground only.
- Stabilized construction entrances are rather expensive to construct and when a wash rack is included, a sediment trap of some kind must also be provided to collect wash water runoff.

CASQA
CALIFORNIA STORMWATER QUALITY ASSOCIATION

Stabilized Construction Entrance/Exit TC-1

Implementation

General

A stabilized construction entrance is a pad of aggregate underlain with filter cloth located at any point where traffic will be entering or leaving a construction site to or from a public right of way, street, alley, sidewalk, or parking area. The purpose of a stabilized construction entrance is to reduce or eliminate the tracking of sediment onto public rights of way or streets. Reducing tracking of sediments and other pollutants onto paved roads helps prevent deposition of sediments into local storm drains and production of airborne dust.

Where traffic will be entering or leaving the construction site, a stabilized construction entrance should be used. NPDES permits require that appropriate measures be implemented to prevent tracking of sediments onto paved roadways, where a significant source of sediments is derived from mud and dirt carried out from unpaved roads and construction sites.

Stabilized construction entrances are moderately effective in removing sediment from equipment leaving a construction site. The entrance should be built on level ground. Advantages of the Stabilized Construction Entrance/Exit is that it does remove some sediment from equipment and serves to channel construction traffic in and out of the site at specified locations. Efficiency is greatly increased when a washing rack is included as part of a stabilized construction entrance/exit.

Design and Layout

- Construct on level ground where possible.
- Select 3 to 6 in. diameter stones.
- Use minimum depth of stones of 12 in. or as recommended by soils engineer.
- Construct length of 50 ft or maximum site will allow, and 10 ft minimum width or to accommodate traffic.
- Rumble racks constructed of steel panels with ridges and installed in the stabilized entrance/exit will help remove additional sediment and to keep adjacent streets clean.
- Provide ample turning radii as part of the entrance.
- Limit the points of entrance/exit to the construction site.
- Limit speed of vehicles to control dust.
- Properly grade each construction entrance/exit to prevent runoff from leaving the construction site.
- Route runoff from stabilized entrances/exits through a sediment trapping device before discharge.
- Design stabilized entrance/exit to support heaviest vehicles and equipment that will use it.

Stabilized Construction Entrance/Exit TC-1

- Select construction access stabilization (aggregate, asphaltic concrete, concrete) based on longevity, required performance, and site conditions. Do not use asphalt concrete (AC) grindings for stabilized construction access/roadway.
- If aggregate is selected, place crushed aggregate over geotextile fabric to at least 12 in. depth, or place aggregate to a depth recommended by a geotechnical engineer. A crushed aggregate greater than 3 in. but smaller than 6 in. should be used.
- Designate combination or single purpose entrances and exits to the construction site.
- Require that all employees, subcontractors, and suppliers utilize the stabilized construction access.
- Implement SE-7, Street Sweeping and Vacuuming, as needed.
- All exit locations intended to be used for more than a two-week period should have stabilized construction entrance/exit BMPs.

Inspection and Maintenance

- Inspect and verify that activity–based BMPs are in place prior to the commencement of associated activities. While activities associated with the BMPs are under way, inspect BMPs in accordance with General Permit requirements for the associated project type and risk level. It is recommended that at a minimum, BMPs be inspected weekly, prior to forecasted rain events, daily during extended rain events, and after the conclusion of rain events.
- Inspect local roads adjacent to the site daily. Sweep or vacuum to remove visible accumulated sediment.
- Remove aggregate, separate and dispose of sediment if construction entrance/exit is clogged with sediment.
- Keep all temporary roadway ditches clear.
- Check for damage and repair as needed.
- Replace gravel material when surface voids are visible.
- Remove all sediment deposited on paved roadways within 24 hours.
- Remove gravel and filter fabric at completion of construction

Costs

Average annual cost for installation and maintenance may vary from $1,200 to $4,800 each, averaging $2,400 per entrance. Costs will increase with addition of washing rack, and sediment trap. With wash rack, costs range from $1,200 - $6,000 each, averaging $3,600 per entrance.

References

Manual of Standards of Erosion and Sediment Control Measures, Association of Bay Area Governments, May 1995.

Stabilized Construction Entrance/Exit TC-1

National Management Measures to Control Nonpoint Source Pollution from Urban Areas, USEPA Agency, 2002.

Proposed Guidance Specifying Management Measures for Sources of Nonpoint Pollution in Coastal Waters, Work Group Working Paper, USEPA, April 1992.

Stormwater Quality Handbooks Construction Site Best Management Practices (BMPs) Manual, State of California Department of Transportation (Caltrans), November 2000.

Stormwater Management of the Puget Sound Basin, Technical Manual, Publication #91-75, Washington State Department of Ecology, February 1992.

Virginia Erosion and Sedimentation Control Handbook, Virginia Department of Conservation and Recreation, Division of Soil and Water Conservation, 1991.

Guidance Specifying Management Measures for Nonpoint Pollution in Coastal Waters, EPA 840-B-9-002, USEPA, Office of Water, Washington, DC, 1993.

Water Quality Management Plan for the Lake Tahoe Region, Volume II, Handbook of Management Practices, Tahoe Regional Planning Agency, November 1988.

Stabilized Construction Entrance/Exit TC-1

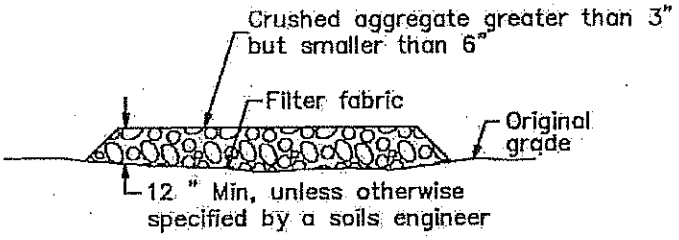

SECTION B–B
NTS

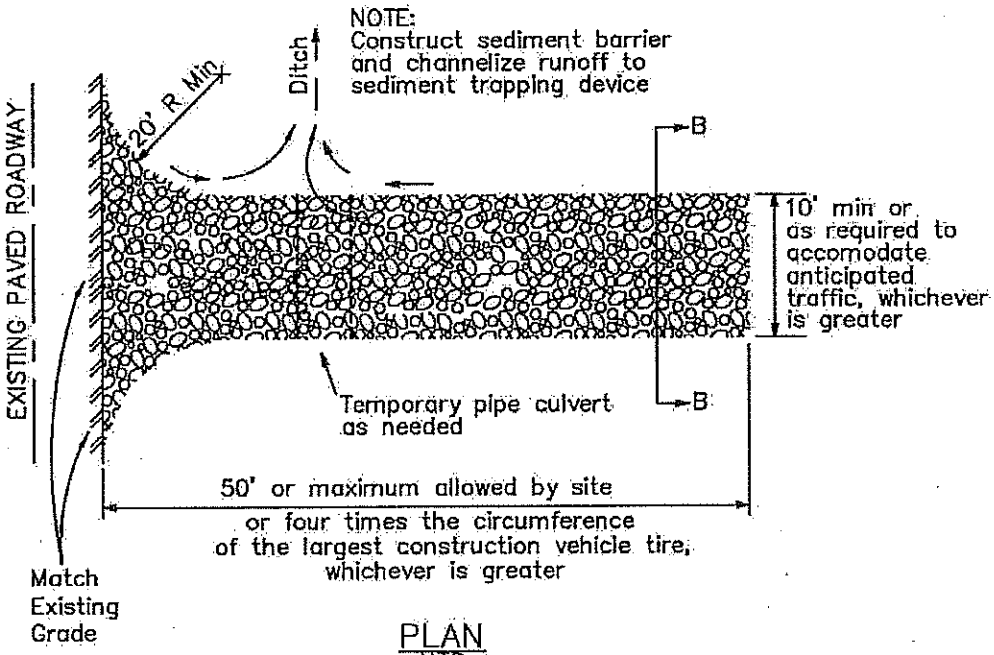

PLAN
NTS

Stabilized Construction Entrance/Exit TC-1

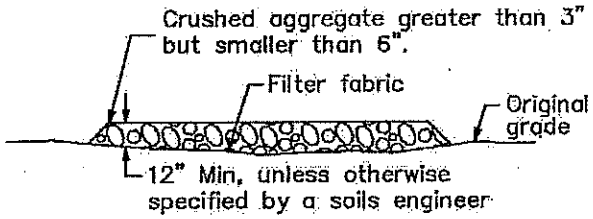

SECTION B–B
NTS

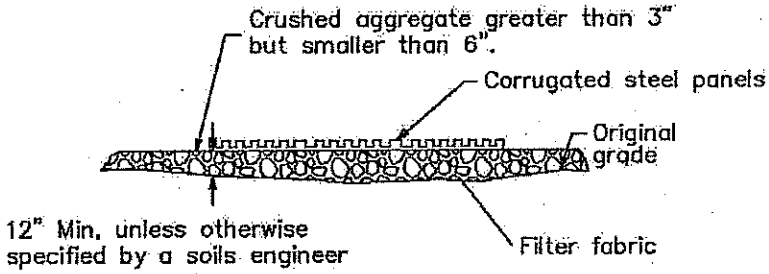

SECTION A–A
NOT TO SCALE

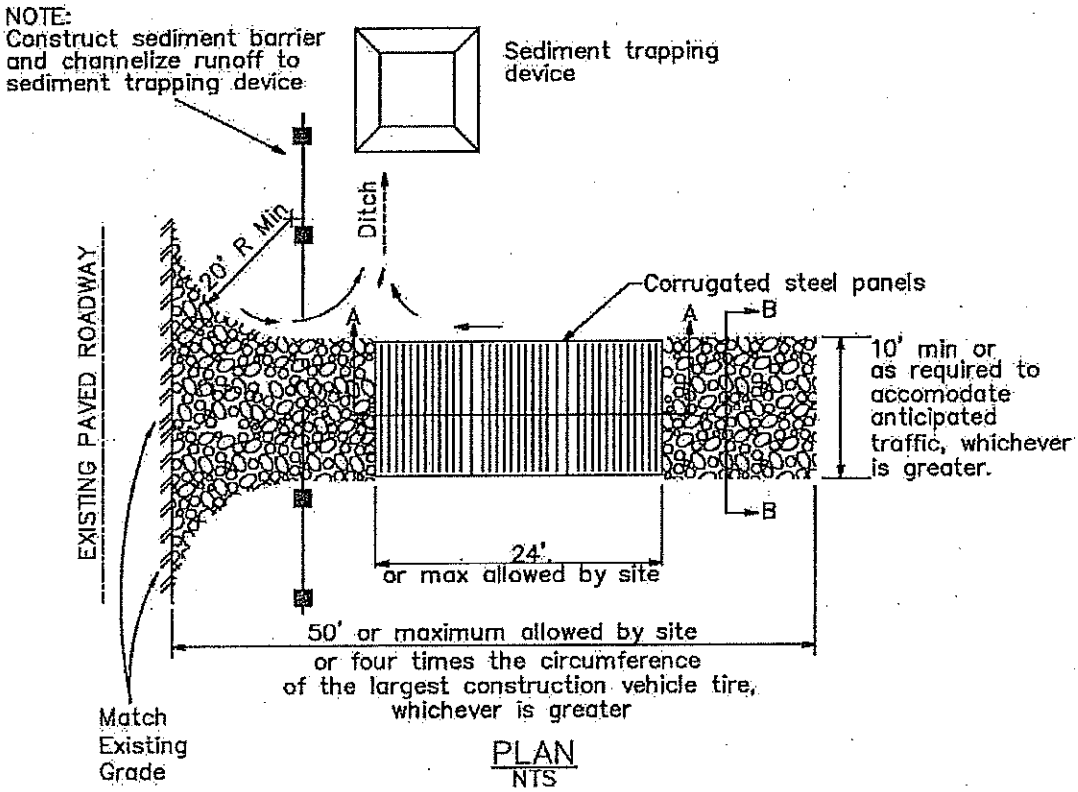

PLAN
NTS

Stabilized Construction Roadway TC-2

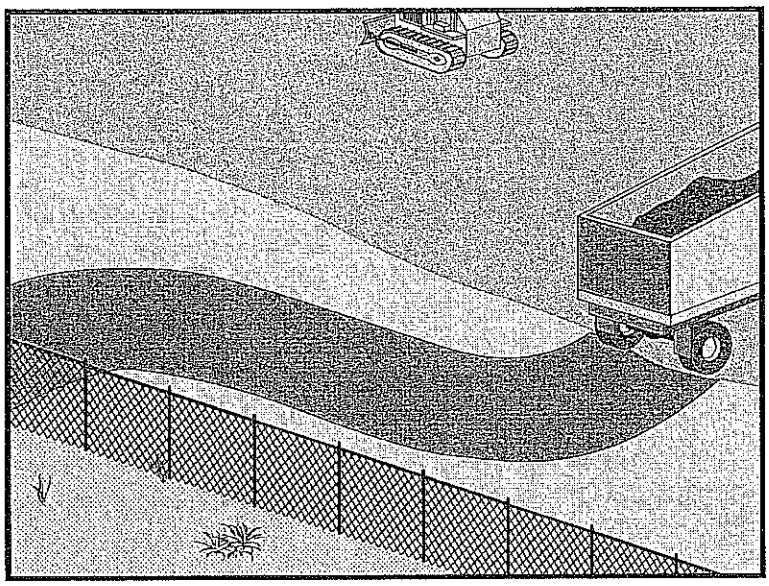

Categories

EC	Erosion Control	☒
SE	Sediment Control	☒
TC	Tracking Control	☑
WE	Wind Erosion Control	
NS	Non-Stormwater Management Control	
WM	Waste Management and Materials Pollution Control	

Legend:

☑ **Primary Objective**

☒ **Secondary Objective**

Targeted Constituents

Sediment	☑
Nutrients	
Trash	
Metals	
Bacteria	
Oil and Grease	
Organics	

Potential Alternatives

None

Description and Purpose

Access roads, subdivision roads, parking areas, and other onsite vehicle transportation routes should be stabilized immediately after grading, and frequently maintained to prevent erosion and control dust.

Suitable Applications

This BMP should be applied for the following conditions:

- Temporary Construction Traffic:
  - Phased construction projects and offsite road access
  - Construction during wet weather
- Construction roadways and detour roads:
  - Where mud tracking is a problem during wet weather
  - Where dust is a problem during dry weather
  - Adjacent to water bodies
  - Where poor soils are encountered

Limitations

- The roadway must be removed or paved when construction is complete.
- Certain chemical stabilization methods may cause stormwater or soil pollution and should not be used. See WE-1, Wind Erosion Control.

Stabilized Construction Roadway TC-2

- Management of construction traffic is subject to air quality control measures. Contact the local air quality management agency.
- Materials will likely need to be removed prior to final project grading and stabilization.
- Use of this BMP may not be applicable to very short duration projects.

Implementation

General

Areas that are graded for construction vehicle transport and parking purposes are especially susceptible to erosion and dust. The exposed soil surface is continually disturbed, leaving no opportunity for vegetative stabilization. Such areas also tend to collect and transport runoff waters along their surfaces. During wet weather, they often become muddy quagmires that generate significant quantities of sediment that may pollute nearby streams or be transported offsite on the wheels of construction vehicles. Dirt roads can become so unstable during wet weather that they are virtually unusable.

Efficient construction road stabilization not only reduces onsite erosion but also can significantly speed onsite work, avoid instances of immobilized machinery and delivery vehicles, and generally improve site efficiency and working conditions during adverse weather

Installation/Application Criteria

Permanent roads and parking areas should be paved as soon as possible after grading. As an alternative where construction will be phased, the early application of gravel or chemical stabilization may solve potential erosion and stability problems. Temporary gravel roadway should be considered during the rainy season and on slopes greater than 5%.

Temporary roads should follow the contour of the natural terrain to the maximum extent possible. Slope should not exceed 15%. Roadways should be carefully graded to drain transversely. Provide drainage swales on each side of the roadway in the case of a crowned section or one side in the case of a super elevated section. Simple gravel berms without a trench can also be used.

Installed inlets should be protected to prevent sediment laden water from entering the storm sewer system (SE-10, Storm Drain Inlet Protection). In addition, the following criteria should be considered.

- Road should follow topographic contours to reduce erosion of the roadway.
- The roadway slope should not exceed 15%.
- Chemical stabilizers or water are usually required on gravel or dirt roads to prevent dust (WE-1, Wind Erosion Control).
- Properly grade roadway to prevent runoff from leaving the construction site.
- Design stabilized access to support heaviest vehicles and equipment that will use it.

Stabilized Construction Roadway TC-2

- Stabilize roadway using aggregate, asphalt concrete, or concrete based on longevity, required performance, and site conditions. The use of cold mix asphalt or asphalt concrete (AC) grindings for stabilized construction roadway is not allowed.
- Coordinate materials with those used for stabilized construction entrance/exit points.
- If aggregate is selected, place crushed aggregate over geotextile fabric to at least 12 in. depth. A crushed aggregate greater than 3 in. but smaller than 6 in. should be used.

Inspection and Maintenance

- Inspect and verify that activity–based BMPs are in place prior to the commencement of associated activities. While activities associated with the BMP are under way, inspect BMPs in accordance with General Permit requirements for the associated project type and risk level. It is recommended that at a minimum, BMPs be inspected weekly, prior to forecasted rain events, daily during extended rain events, and after the conclusion of rain events.
- Keep all temporary roadway ditches clear.
- When no longer required, remove stabilized construction roadway and re-grade and repair slopes.
- Periodically apply additional aggregate on gravel roads.
- Active dirt construction roads are commonly watered three or more times per day during the dry season.

Costs

Gravel construction roads are moderately expensive, but cost is often balanced by reductions in construction delay. No additional costs for dust control on construction roads should be required above that needed to meet local air quality requirements.

References

Blueprint for a Clean Bay: Best Management Practices to Prevent Stormwater Pollution from Construction Related Activities; Santa Clara Valley Nonpoint Source Pollution Control Program, 1995.

Coastal Nonpoint Pollution Control Program; Program Development and Approval Guidance, Working Group, Working Paper; USEPA, April 1992.

Manual of Standards of Erosion and Sediment Control Measures, Association of Bay Area Governments, May 1995.

Stormwater Quality Handbooks Construction Site Best Management Practices (BMPs) Manual, State of California Department of Transportation (Caltrans), November 2000.

Stormwater Management for Construction Activities, Developing Pollution Prevention Plans and Best Management Practices, EPA 832-R-92005; USEPA, April 1992.

Stormwater Management of the Puget Sound Basin, Technical Manual, Publication #91-75, Washington State Department of Ecology, February 1992.

Stabilized Construction Roadway TC-2

Virginia Erosion and Sedimentation Control Handbook, Virginia Department of Conservation and Recreation, Division of Soil and Water Conservation, 1991.

Water Quality Management Plan for the Lake Tahoe Region, Volume II, Handbook of Management Practices, Tahoe Regional Planning Agency, November 1988.

C&D Debris Ordinance Overview

C&D Debris Waste Management Plan
City of Sacramento Solid Waste Services
2812 Meadowview Road, Building 1
Sacramento, CA 95832
Phone: (916) 808-4839 / Fax: (916) 808-4999
C&D@cityofsacramento.org

Construction and Demolition (C&D) Debris Ordinance

When a project is covered by the updated C&D ordinance, it must **recycle 50%** of the debris it generates. The below table shows the differences between the old requirements and the new. If a project is filed before 2011, the old requirements apply.

Effective Date	January 1, 2011 *Applies to the application filing date.*
Covered Projects	**Old:** All projects with a valuation of $250,000 or more, and all down-to-the-ground demolitions, regardless of valuation. **New:** All projects designated as "CALGreen", including, but not necessarily limited to: • New construction • First tenant improvements • Grading permits Projects with a valuation of $250,000 or more, as well as demolition, are still covered.
Materials required to be recycled	**Old:** - Scrap metal - Inert materials (dirt, soil, rocks, concrete, asphalt paving, etc.) - Corrugated cardboard - Wood pallets - Clean wood waste (unpainted, untreated lumber and plywood, etc.) **New:** 50% of all generated waste must be diverted/recycled. There is no longer a list of required materials, but recycling these types is highly recommended.
How to recycle *(unchanged)*	Mixed C&D: All debris (no wet garbage) into one bin Source-separated: separate by type
Who can haul debris *(unchanged)*	Mixed C&D: permit-holder, waste generator, franchised hauler, or City of Sacramento Source-separated: anyone
Where debris may go *(unchanged)*	Mixed C&D: SWA-certified Mixed C&D facility only Source-separated: any facility that accepts the material
Fee *(unchanged)*	0.04% of project valuation Minimum: $40 / Maximum: $800
Security Deposit *(unchanged)*	1% of project valuation (max $10,000), due with fee when applying. *Only applicable if permit applicant has been fined in past 12 months.*
Fines *(unchanged)*	If found to be non-compliance: $50-$250 for first offense $251-$500 for second offense $501-$1500 for subsequent offenses
Documentation *(unchanged)*	Permit holder must keep a waste log of all materials hauled away from project site, as well as all weight tickets of disposed and recycled material. The waste log must be submitted at the end of the project, within 30 days after permit has been finaled or expired.

Rev. 01/21/2011

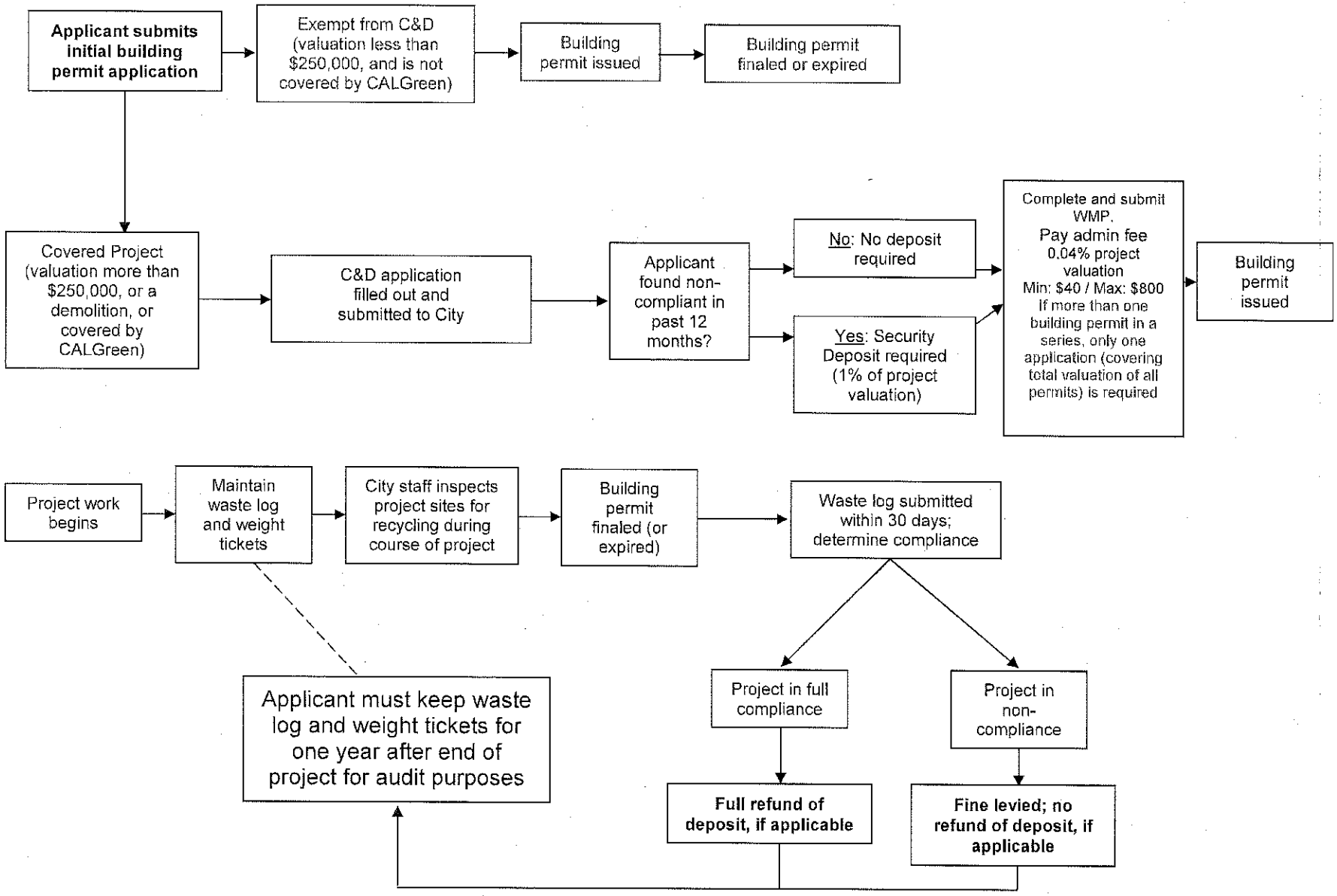
Applicant submits initial building permit application
Exempt from C&D (valuation less than $250,000, and is not covered by CALGreen)
Building permit issued
Building permit finaled or expired
Covered Project (valuation more than $250,000, or a demolition, or covered by CALGreen)
C&D application filled out and submitted to City
Applicant found non-compliant in past 12 months?
No: No deposit required
Yes: Security Deposit required (1% of project valuation)
Complete and submit WMP. Pay admin fee 0.04% project valuation Min: $40 / Max: $800 If more than one building permit in a series, only one application (covering total valuation of all permits) is required
Building permit issued
Project work begins
Maintain waste log and weight tickets
City staff inspects project sites for recycling during course of project
Building permit finaled (or expired)
Waste log submitted within 30 days; determine compliance
Applicant must keep waste log and weight tickets for one year after end of project for audit purposes
Project in full compliance
Project in non-compliance
Full refund of deposit, if applicable
Fine levied; no refund of deposit, if applicable

Construction & Demolition Waste Management Plan

C&D Debris Waste Management Plan
City of Sacramento Solid Waste Services
2812 Meadowview Road, Building 1
Sacramento, CA 95832
Phone: (916) 808-4839 / Fax: (916) 808-4999
C&D@cityofsacramento.org

Building Permit Numbers	
	Please put all known permit numbers related to this project.
Form submitted by:	
	Please attach a business card, or put your name with a phone number and/or an email address.

This Waste Management Plan (WMP) must be submitted and approved before your building permit(s) will be issued. Only one WMP is required if a project has multiple building permits associated to it (i.e., multiple houses in a subdivision, or multiple related permits at one address). The administration fee and security deposit (if applicable) must be submitted for this form to be approved. Administration fee is 0.04% of project valuation (min $40, max $800); security deposit is 1% of valuation (max $10,000). **The accompanying Waste Log must be submitted within 30 days of final inspection (or permit expiration) of the project, or a fine may be imposed.** Approval may also be delayed if the waste log from a previous project is due.

Building Project Information:

Job Address: _____

Contractor: _____ Phone: _____

Address: _____ Email: _____

Owner: _____ Phone: _____

Address: _____ Email: _____

Briefly describe the project:

_____

_____

Materials Required to be Recycled

50% of all debris must be recycled if generated during the course of your project. You can either **source-separate** them, which may be hauled by anyone, or mix them in one container and send the **mixed C&D debris** load to a **Certified Mixed C&D Sorting Facility**. Mixed C&D loads can only be hauled by a franchised hauler or self-hauled. Please see the Definitions section, on the next page, for more information.

50%
of all debris must be recycled

Material Management

How will C&D debris will be stored on the project site: ☐ Mixed C&D ☐ Source-Separated

Company to haul away debris: _____

Facilities to receive debris: _____

Waste Log and tickets must be submitted within 30 days of permit being finaled.

Office Use Only: Received by: _____ On date: _____

☐ Logged ☐ Approved ☐ Scanned ☐ Payment Processed ☐ Filed Fee amount: $_____

C&D Debris Waste Management Plan

C&D Debris Waste Management Plan
City of Sacramento Solid Waste Services
2812 Meadowview Road, Building 1
Sacramento, CA 95832
Phone: (916) 808-4839 / Fax: (916) 808-4999
C&D@cityofsacramento.org

Definitions.

Please read and understand these terms. Call Solid Waste at (916) 808-4833 if these terms are not clear to you. More information is also available online at http://www.cityofsacramento.org/utilities/.

1. **Self-haul or self-hauling**: This is when the permit holder, general contractor, or a subcontractor *who is doing work on the project* hauls their own waste materials for recycling or disposal. Note that a *jobsite cleanup crew is not doing other work on the project and is not self-hauling*. Jobsite cleanup crews need to be franchised in order to haul mixed C&D debris away.

2. **Franchised hauler**: See Utilities web page for a list of these haulers. These companies, and the City of Sacramento, are the only companies in Sacramento who can legally collect and haul mixed C&D debris for a fee.

3. **Source separation**: This is achieving compliance with the recycling requirement by keeping wood, metal, cardboard, or other recyclables in separate containers, and sending it to an authorized recycler. (A list of recyclers is on the Utilities web site.) Source-separated material may be hauled by anyone.

4. **Mixed C&D debris**: This is achieving compliance with the recycling requirement by putting all recyclable (and a small amount of unrecyclable) debris into one container. Mixed material must be sent to a certified mixed C&D sorting facility to have the recyclable material extracted and recovered. Mixed material also must be either self-hauled, or hauled by a franchised hauler. If your job site is crowded, this option saves the most space.

5. **Certified Mixed C&D Sorting Facility**: See the Utilities web site for a list. These facilities have been certified by the Sacramento Regional Solid Waste Authority to extract recyclable materials from mixed C&D debris. If you achieve compliance by mixed recovery, your debris must go to a certified mixed sorting facility.

Terms and Conditions

- Your approved Waste Management Plan and Waste Log must be kept on the job site in the permit folder for the duration of the project.
- City of Sacramento staff may enter the jobsite to inspect waste collection areas.
- Only SWA-Certified Mixed C&D Sorting Facilities may be used to recycle these materials if mixed with other materials.
- Only SWA-Franchised Haulers or self-haulers (as defined above) may collect and transport trash or mixed C&D material from the jobsite.
- Construction and Demolition Debris may not be burned or dumped illegally.
- Your Waste Log must be completed and submitted within 30 days of your permit being finaled or expired. All waste hauling and disposal or recycling activity must be entered on the Waste Log, including information from any subcontractors who self-hauled their own debris off-site. *Enter your Permit Number on your Waste Log now!*
- You must keep all receipts or weight-tickets from your project for a period of one year from the submittal of your waste log.
- Failure to comply with these terms and conditions may result in a fine and a security deposit on future projects.

C&D Debris Waste Log

C&D Debris Waste Management Plan
City of Sacramento Solid Waste Services
2812 Meadowview Road, Building 1
Sacramento, CA 95832
Phone: (916) 808-4839 / Fax: (916) 808-4999
C&D@cityofsacramento.org

Building Permit Numbers: _____

Please put all known permit numbers related to this project.

This waste log must be submitted to Solid Waste within 30 days of the building permit being finaled (or expired). This waste log, and the supporting weight tickets, must also be kept on file for one year after project completion.

Date	Hauler	Material	Destination	Weight*

Hauler: Indicate the Franchisee, Self-Hauler, City of Sacramento, or other hauler who removed the material offsite.
Material: Indicate appropriate category: Scrap Metal, Inert Materials, Cardboard, Wooden Pallets, or Clean Wood Waste.
Destination: Indicate the facility that received the material for disposal or recycling
*** Weight**: Indicate the weight. If weight is not known, put volume. Example: "3.2 tons" – or – "10 yards"

Office Use Only: Received by: _____ On date: _____

☐ Logged ☐ Approved ☐ Scanned ☐ Filed Total Diversion: _____%

Rev. 01/26/2011

Search

Home
About the SWA
Board of Directors
Franchised Haulers
Solid Waste Facilities
C&D Debris Sorting Facilities
Business Recycling
Multi-Family Recycling
Report Early Morning Noise
Enforcement Issues
SWA Code
More links...
Sacramento
GreenCycle

Some files require the free Adobe Reader for viewing. Click the button below to download the reader.

Get Adobe Reader

Certified Construction and Demolition (C&D) Debris Sorting Facilities

Solid Waste Facilities in the SWA region are governed by Title III of the SWA Code. Title III authorizes a voluntary program for C&D facilities. With a sorting and recycling program for mixed C&D materials, facilities can be certified. Builders who are required to recycle by City or County ordinance can comply by sending mixed loads of C&D to these facilities. It is an easier way for builders to recycle if their job-site is too crowded for multiple bins or if they have other reasons why mixed recycling is preferable to source separating their wood, metal and cardboard.

Administrative Rule 2009-01 designates recyclables for extraction from mixed C&D debris by SWA-certified C&D sorting facilities.

Administrative Rule 2009-02 identifies source-separated recyclable materials that will be excluded from a SWA-certified C&D sorting facility's performance calculation.

Download the Application for Certification

The following facilities have been certified as C&D Debris Sorting Facilities:

Allied Waste / Elder Creek Transfer and Recovery
8642 Elder Creek Road, Sacramento
916-387-8425
Also provides jobsite debris hauling service

Florin-Perkins Public Disposal
4201 Florin Perkins Road, Sacramento
916-443-5120
Also arranges jobsite debris hauling service

L&D Landfill
8635 Fruitridge Road, Sacramento
916-737-8640
For jobsite debris hauling service: Atlas Disposal 916-455-2800

Waste Management / K&M Recycle America
3562 Ramona Ave, Sacramento
916-452-0142
Must call first to make arrangements
For jobsite debris hauling service: Waste Management 916-294-4045

For more information about the SWA, email SWAInfo@SacCounty.net.

© Copyright | Privacy Policy | Conditions of Use | Accessibility Policy
Availability of Information (Alternate Formats)

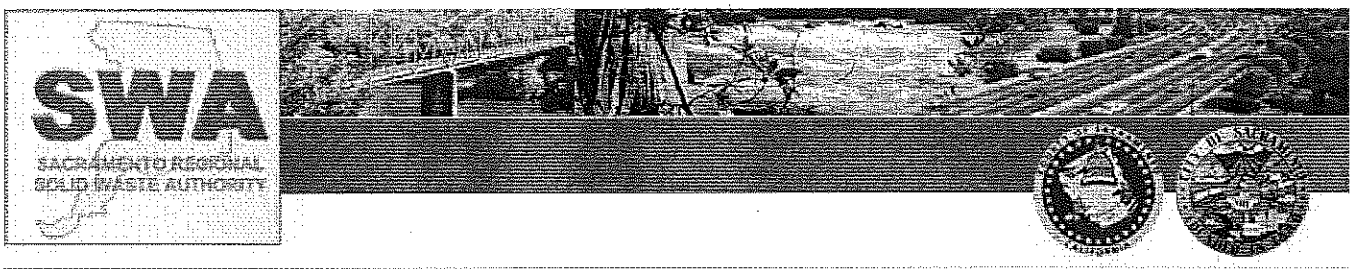

Solid Waste Facilities

The following solid waste facilities are located within the SWA Region – City of Sacramento and the unincorporated area of Sacramento County.

Elder Creek
8642 Elder Creek Road
Sacramento, CA
916-387-8425
Hours
Open
Monday - Friday
8:00 am - 3:00 pm
Closed Saturday & Sunday

Kiefer Landfill
12701 Kiefer Blvd.
Sloughhouse, CA
916-875-5555
Hours
Open seven days per week
Monday - Friday
6:30 am - 4:00 pm
Saturday & Sunday
8:30 am - 4:30 pm

L & D Landfill
8635 Fruitridge Road
Sacramento, CA
916-383-9420
Hours
Open
Monday - Friday
6:30 am - 4:00 pm
Saturday
8:00 am - 1:00 pm
Closed Sunday

North Area Recovery Station (NARS)
4450 Roseville Road
North Highlands, CA
916-875-5555
Hours
Open seven days per week
Monday - Friday
6:30 am - 6:00 pm
Saturday & Sunday
8:00 am - 6:00 pm

Sacramento Recycling & Transfer Station
8491 Fruitridge Road
Sacramento, CA
916-379-0500
Hours
Open
Monday - Saturday
8:00 am - 5:00 pm
Closed Sunday

Waste Management Recycle America
3562 Ramona Avenue
Sacramento, CA
916-452-0142
Hours
Open
Monday - Friday
7:00 am - 5:00 pm
Closed Saturday & Sunday

For more information about the SWA, email SWAInfo@SacCounty.net.

© Copyright | Privacy Policy | Conditions of Use | Accessibility Policy
Availability of Information (Alternate Formats)

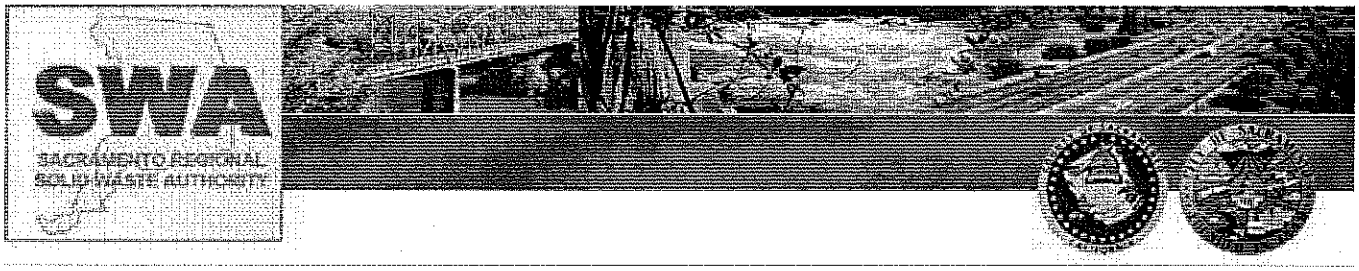

SWA Recycling Services

Subscribe to a recycling service from the Franchised Hauler list or Authorized Recycler list below.

The following is the current list of Franchised Haulers and Authorized Recyclers permitted to provide services in the SWA Region, which consists of unincorporated Sacramento County and the City of Sacramento. Franchised Haulers provide waste and recycling services while Authorized Recyclers provide recycling services only.

Franchised Haulers	Phone number
AAA Services	916-568-3456
Aces Waste Service, Inc.	866-488-8837
Advance Disposal, Inc.	888-468-8728
Allied Waste Services	916-631-0600
All Waste Systems, Inc.	916-456-1555
Atlas Disposal Industries, LLC	916-455-2800
California Waste Recovery Systems	916-441-1985
Central Valley Waste Services	209-369-8274
Elk Grove Waste Management, LLC	916-689-4052
Mapa Industries, Inc.	916-452-9003
Mini Drops, Inc	916-776-1499
North West Recyclers	916-686-8575
Recology Auburn Placer	916-381-5300
Waste Management of Sacramento	916-387-1400
Waste Removal & Recycling	916-453-1400
Western Strategic Materials, Inc	916-388-1076

Authorized Recycler	Phone number
AAA Services	916-568-3456
A & J Recycling	916-962-3762
C & C Paper Recycling	916-920-2673
California Electronic Asset Recovery	916-388-1777
International Paper	916-371-4634
Modern Waste Solutions	916-339-3676
Recycling Industries, Inc.	916-452-3961
Sacramento Regional Conservation Corps	916-386-8394
Smurfit-Stone Container Corporation	916-381-3340
Southside Art Center	916-387-8080
Stay Safe Shred and Recycle	916-640-1300

The City of Sacramento also provides waste and recycling services within the City's

Packet Page 2158 of 2531

limits. Please contact the City of Sacramento Solid Waste Division at 916-808-4937 for more information. Please continue to check this website for the most current information about Franchised Haulers and Authorized Recyclers.

If you are interested in becoming an Authorized Recycler, please download the Authorized Recycler Certificate Of Operation Application and Insurance Requirements.

Download the Business Recycling Program Booklet to learn more about the business recycling program requirements. For more information about Business Recycling, email SWABusinessRecycling@SacCounty.net.

For more information about the SWA, email SWAInfo@SacCounty.net.

© Copyright | Privacy Policy | Conditions of Use | Accessibility Policy
Availability of Information (Alternate Formats)

C&D Debris Recyclers Database

C&D Recycling Facilities

Search Criteria:

- Material Type: (All)
- County: Sacramento

Number of facilities found: 32

New Search

Facility Name	City
A-1 Metals	Rio Linda
Allied Waste Transfer Station	Sacramento
AMS (Sacramento)	Sacramento
Bell Marine Co.	Sacramento
Consolidated Pallet Co., Inc.	Sacramento
Crete Crush, LLC	Rancho Cordova
Crete Crush, LLC Bradshaw Yard	Sacramento
Elder Creek Transfer & Recovery	Sacramento
five star aggregates inc	elk grove
Golden State Crushing	Sacramento
Granite Construction - Bradshaw Aggregates	Sacramento
Granite Construction - Elkhorn Plant	Rio Linda
Granite Construction Company (Sacramento)	Sacramento
Habitat For Humanity - Sacramento	Sacramento
Jose Luis Pallets	Sacramento
Kelly-Moore Paint Co.	Sacramento
Kiefer Landfill c/o Sacramento County, Dept of Waste Mgt & Recycling	Sloughhouse
L and D Landfill	Sacramento
North Area Recovery Station-Recycling Area	North Highlands
Ruland's-used Office Furniture	Sacramento

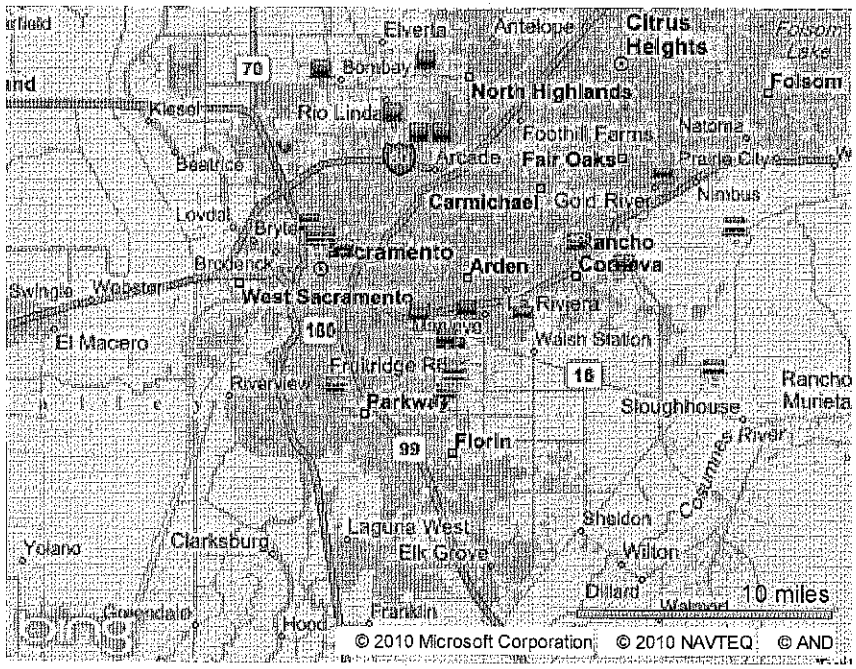

Rustic Brick & Stone Company	Sacramento
Sacramento Recycling and Transfer Station	Sacramento
Schnitzer Steel	Rancho Cordova
Schnitzer Steel-Sacramento	Rancho Cordova
SIMS METAL-Rancho Cordova	Rancho Cordova
SIMS METAL-Sacramento	Sacramento
Smurf-it Stone	Sacramento
Teichert Aggregates-Perkins	Sacramento
Teichert Aggregates-Prairie City	Rancho Cordova
The City of Sacramento PHHWCF	Sacramento
Visions Recycling, Inc.	McClellan
Waste Management Recycle America LLC	Sacramento

New Search

Last Updated: Data updated continuously.
Construction & Demolition Debris Recycling, http://www.calrecycle.ca.gov/ConDemo/
C&D Program Staff, condemo@calrecycle.ca.gov (916) 341-6489

Conditions of Use | Privacy Policy
©1995, 2011 California Department of Resources Recycling and Recovery (CalRecycle). All rights reserved.

City of Sacramento Bid Recap Sheet

Project Name: **Dogwood Park Development**

Bid Opening Date: 12/11/2013

Bid Number: : B14190021005

Project Manager: Dennis Day ext. 7633

Estimate: $952,502.00

Project Type: Goods-Services

Project Number:

Project Department: Gen. Services

Fee: $ 0

	Name of Bidder	Location		Amount of Bid
1.	Green Valley Landscape	Livermore, CA	6	$808,184.00
2.	Dominguez Landscape	Sacramento, CA	7	$825,455.65
3.	Goodland Landscape Construction, Inc.	Tracy, CA	14	$968,452.00
4.	Grand Sierra Construction	Rocklin, CA	11	$883,367.00
5.	Sierra Valley Construction	Roseville, CA	12	$892,685.00
6.	Abide Builders Inc.	Vacaville, CA	1	$764,360.00
7.	Olympic Land Construction	Sacramento, CA	4	$788,355.00
8.	Hemington Landscape Services	Cameron , CA	5	$792,445.00
9.	JM Slover Inc	Placerville, CA	3	$776,388.00
10.	Swank Construction	Vacaville, CA	9	$849,210.00
11.	Wabo Landscape	Hercules, CA	10	$868,640.00
12.	SW Allen Construction	Sacramento, CA	13	$930,453.00
13	B & M Builders, Inc.	Rancho Cordova	2	$773,988.00
14.	Naturescapes	San Jose, CA	8	$828,939.00

Bid Opened by: Angelina Resurreccion