Meeting Date: **5/27/2014**

Report Type: Consent

Report ID: 2014-00187

City of SACRAMENTO **19**

City Council Report
915 I Street, 1st Floor
www.CityofSacramento.org

Title: Sacramento Railyards West Tunnel Ramps Access Project – Appropriate and Transfer Funds, Approve First Amendment to the Amended and Restated 6th Street Roadway Project Escrow Agreement, Approve First Amendment to the 5th Street Project Delivery Agreement, Award Contract and Approve Professional Services Agreement (Reviewed 05/20/2014)

Location: Downtown near Sacramento Valley Station, between I Street Bridge and 7th Street, District 3

Recommendation: Pass a Resolution 1) approving the First Amendment to the Amended and Restated 6th Street Roadway Project and Escrow Agreement; 2) approving the First Amendment to the 5th Street Project Delivery Agreement; 3) appropriating $733,732 (Fund 3703) in federal funds to the Sacramento Intermodal Facility Project (T15029000); 4) transferring $740,000 (Fund 3702) in escrow account funds from the 6th Street Roadway Project (T15116200) to the Sacramento Intermodal Facility Project (T15029000); 5) appropriating $88,533 (Fund 3703) in federal funds to the Sacramento Intermodal Facility Project (T15029000) when funding is obligated; 6) reducing the total 5th Street and Railyards Boulevard Project budget by $100,000 to $28,800,000; 7) approving Plans and Specifications for the Sacramento Railyards West Tunnel Ramps Access Project; 8) awarding a contract with B&M Builders in an amount not to exceed $1,334,304; and 9) approving a Professional Services Agreement for construction management with Vali Cooper & Associates in an amount not to exceed $167,811.

Contact: Tim Mar, Supervising Civil Engineer, (916) 808-7531; Nicholas Theocharides, Engineering Services Manager, (916) 808-5065, Department of Public Works

Presenter: None

Department: Public Works Department

Division: Engineering Services Admin

Dept ID: 15001111

Attachments:
1-Description/Analysis
2-Resolution
3-Exhibit A Location Map
4-First Amendment to Project Delivery Agreement
5-Amended and Restated 6th Street Escrow Agreement
6-Contract B & M
7-Professional Services Agreement Vali Cooper

City Attorney Review

Approved as to Form
Gerald Hicks
4/28/2014 11:37:49 AM

Approvals/Acknowledgements

Department Director or Designee: Jerry Way - 4/23/2014 4:13:36 PM

James Sanchez, City Attorney Shirley Concolino, City Clerk Russell Fehr, City Treasurer
John F. Shirey, City Manager

Back to Report Table of Contents

Description/Analysis

Issue: The Sacramento Railyards West Tunnel Ramps Access Project will provide an accessible pedestrian and bicycle connection between Old Sacramento and the Sacramento Valley Station and the State Historic Railroad Museum by providing access to the West Tunnel (which was built with the Railyards Track Relocation Project). The project consists of constructing improvements to the sidewalks at the intersection of 2nd Street at I Street and improvements to the Sacramento Valley Station and California State Railroad Museum Parking Lots, including constructing new curbs, gutters and sidewalks, a new pavement section, pavement resurfacing, signing and striping, landscaping, and lighting improvements.

The project was advertised and bids were received on January 30, 2014. City Council approval is necessary to amend agreements, award a construction contract, execute a Professional Services Agreement for construction management and inspection, and to transfer and appropriate additional funding into the project.

Policy Considerations: The action requested herein is consistent with the Sacramento City Code, Title 3 and with the City of Sacramento General Plan goals of improving public safety and achieving sustainability and neighborhood livability.

Economic Impacts: This new infrastructure is expected to create 5.38 total jobs (3.09 direct jobs and 2.29 jobs through indirect and induced actives) and create $830,101.84 in total economic output ($523,219.54 of direct output and another $306,882.31 of output through indirect and induced activities).

The indicated economic impacts are estimates calculated using a calculation tool developed by the Center for Strategic Economic Research (CSER). CSER utilized the IMPLAN input-output model (2009 coefficients) to quantify the economic impacts of a hypothetical $1 million of spending in various construction categories within the City of Sacramento in an average one-year period. Actual impacts could differ significantly from the estimates and neither the City of Sacramento nor CSER shall be held responsible for consequences resulting from such differences.

Environmental Considerations:

California Environmental Quality Act (CEQA) and National Environmental Policy Act (NEPA): The Sacramento Intermodal Facility Phase 1 Project, Track Relocation, (Project Number T15029005 for design) is subject to review under both CEQA and NEPA. The Sacramento Railyards West Tunnel Ramps Access Project was originally part of the original scope of Track Relocation Project. The City is the CEQA lead agency and the Federal Highway Administration (FHWA) is the NEPA lead agency for the Project. On June 2, 2009, the City Council approved a Mitigated Negative Declaration under CEQA, and a Notice of Determination was filed on June 8, 2009. On March 27, 2009, FHWA released the Environmental Assessment and Section 4(f) Evaluation Report for public review. FHWA also consulted with the State Office of Historic Preservation (SHPO) in accordance with Section 106 and on August 28, 2009

entered into a Programmatic Agreement, including the City, Caltrans, the Federal Railroad Administration (FRA) and the Federal Transit Administration (FTA) as signatories. On August 31, 2009, FHWA issued a Finding of No Significant Impact (FONSI) and authorized the City to implement Phases 1 and 2 of the Intermodal project. On March 15, 2010, FRA issued its separate FONSI.

Subsequent minor changes that involve historic resources and changes in the Area of Potential Effect have been submitted to Caltrans and SHPO per the terms of the Programmatic Agreement. Therefore, all requirements of CEQA, NEPA and Sections 4(f) and 106 under state and federal laws have been met and no further environmental review is required to approve the proposed actions.

Sustainability Considerations: The accessible pedestrian and bicycle improvements are consistent with the City's sustainability goals to provide better accessibility to public transportation and improve the City's pedestrian infrastructure.

Other: None.

Commission/Committee Action: None.

Rationale for Recommendation: The project was advertised and a total of eight bids were received on January 30, 2014. The bids are summarized below:

Contractor	Bid Amount	DBE Project Participation	Good Faith Effort
B&M Builders	**$1,334,304.00**	**6.2**	**Yes**
Abide Builders	$1,344,436.00	12.3	n/a
Western Engineering	$1,407,623.50	0.2	Yes
Sierra Nevada Construction	$1,418,007.00		No
Granite Construction	$1,444,444.00		No
C&C Construction	$1,447,022.75		No
Navajo Pipelines	$1,447,167.00		No
Maguire & Hester	$1,484,445.00		No

The Engineer's Estimate was $1,393,900. Contract award to B&M Builders is recommended as the lowest responsive and responsible bidder.

Construction is anticipated to start in May and be completed by August of 2014.

Construction Management Services

A Request for Proposal (RFP) for construction management services for the Track Relocation Project, 5th Street Overcrossing and 6th Street Bridges was issued in 2010 and Vali Cooper & Associates was selected as the most qualified firm. To improve coordination among all contractors and on-going projects in and near the Amtrak Station and to improve efficiencies and reduce cost, Vali Cooper & Associates was chosen to provide the construction management and inspection for this project. The City has prepared a Public Interest Finding as required by FHWA and Caltrans justifying the continued use of Vali Cooper & Associates for this project.

Project Construction Funding

The Sacramento Railyards West Tunnel Ramps Access Project improvements were originally part of the Track Relocation West Tunnel Ramps construction project; however, this component was deferred while full funding was secured.

Funding for this project is from a combination of Federal funds, Parking funds, State funds, and remaining escrow account funds from IAH Sacramento, LLC Inc.

The First Amendment to the Amended and Restated 6th Street Roadway Project Escrow Agreement provides additional funds that are necessary to construct the West Tunnel Access Project.

The First Amendment to the 5th Street Project Delivery Agreement reduces the projected City Project Delivery costs from $225,000 to $125,000; reflecting the progress of the work and cost of services being provided. Approval of the First Amendment to the amended and restated 6th Street Roadway Project Escrow Agreement amendment is contingent upon approval of the First Amendment to the 5th Street Project Delivery Agreement.

Financial Considerations: The Sacramento Railyards West Tunnel Ramps Access Project is estimated to cost $1,750,265.

As of April 9, 2014, the Sacramento Intermodal Facility Project (T15029000) and its sub-projects have a total budget of $198 million and an unobligated balance of $32.1 million. Most of these funds are restricted and already committed to specific sub projects and activities, therefore additional funding is required to construct the West Tunnel Ramps Access Project.

The Sacramento Intermodal Facility Project (T15029000), currently has $188,000 (Fund 6004) dedicated to construction funding for the Sacramento Railyards West Tunnel Ramps Access Project. The appropriation of $733,732 (Fund 3703) in federal funds which have been obligated for project construction and $88,533 (Fund 3703) in additional federal funding are available to appropriate at contract award, along with the transfer of $740,000 (Fund 3702) in surplus funds from the 6th Street Roadway Project (T15116200) (Fund 3702) brings the available funds to $1,750,265. This amount is

sufficient to execute the construction contract with B&M Builders in the amount of $1,334,304, execute the Professional Services Agreement with Vali Cooper & Associates in the amount of $167,811, and cover remaining staff costs for the construction phase of the project.

As of April 9, 2014, the 6th Street Roadway Project (T15116200) has an unobligated balance of $1,794,248, which is sufficient to complete the transfer of $740,000 (Fund 3702) as well as complete the 6th Street Roadway project. Per the executed Agreement with Inland American Holdings (IAH) Sacramento (Agreement 2011-0019, 6th Street Roadway Project Escrow Agreement), a total of $500,000 can be transferred to support the completion of the Sacramento Railyards West Tunnel Ramps Access Project. The proposed First Amendment to 6th Street Roadway Project Escrow Agreement will provide for an additional $240,000 in escrow funds needed for this project bringing the total transfer amount to $740,000.

To increase the available escrow funds for use on the West Tunnel Access Project, IAH Sacramento requested the City to review the project costs of the 5th Street and Railyards Boulevard Project Delivery Agreement and reduce the 5th Street Project Delivery Agreement to represent a more current delivery cost estimate. A review has been made and the expected cost to administer this agreement is $125,000 rather than $225,000 previously included in the Agreement. Approval of the amendment to the 5th Street and Railyards Boulevard Project Delivery Agreement is needed for the additional escrow funds to be used for the West Tunnel Access Project.

As of April 9, 2014, the 5th Street and Railyards Boulevard Project (T15135800) has an unobligated balance of $6,841,889. The reduction of $100,000 in City project management costs is not expected to affect the completion of construction of the 5th Street and Railyards Boulevard project.

Local Business Enterprise (LBE): The Sacramento Railyards West Tunnel Ramps Access Project has federal funding and requires conformance with project participation guidelines for the Disadvantaged Business Enterprise (DBE) program. The City of Sacramento Local Business Enterprise (LBE) program is, therefore, held in abeyance. B&M Builders has pledged 6.2% DBE participation, which is less than the DBE goal of 11.29%; however, B&M Builders has made the necessary Good Faith Efforts and has met the program requirements.

Back to Report Table of Contents

RESOLUTION NO.

Adopted by the Sacramento City Council

SACRAMENTO RAILYARDS WEST TUNNEL RAMPS ACCESS – APPROPRIATE AND TRANSFER FUNDS, APPROVE FIRST AMENDMENT TO THE AMENDED AND RESTATED 6TH STREET ROADWAY PROJECT ESCROW AGREEMENT, APPROVE FIRST AMENDMENT TO THE 5TH STREET PROJECT DELIVERY AGREEMENT AWARD CONTRACT AND APPROVE PROFESSIONAL SERVICE AGREEMENT

BACKGROUND

A. The Sacramento Railyards West Tunnel Ramps Access Project will provide an accessible pedestrian and bicycle connection between Old Sacramento and Sacramento Valley Station and Railyards Site by providing access to the West Tunnel (which was built with the Railyards Track Relocation project). This access is provided by constructing accessibility improvements such as curb ramps, gutters, pavement improvements, resurfacing and lighting improvements.

B. The City has identified funding for this project through a combination of federal funds, developer contributions, and parking funds.

BASED ON THE FACTS SET FORTH IN THE BACKGROUND, THE CITY COUNCIL RESOLVES AS FOLLOWS:

Section 1. The First Amendment to the Amended and Restated 6th Street Roadway and Project Escrow Agreement is approved and the City Manager is authorized to execute the Amendment.

Section 2. The First Amendment to the 5th Street Project Delivery Agreement is approved and the City Manager is authorized to execute the Amendment.

Section 3. The FY2013/14 CIP is amended by appropriating $733,732 (Fund 3703) in federal funds to the Sacramento Intermodal Facility Project (T15029000).

Section 4. The FY2013/14 CIP is amended by transferring $740,000 (Fund 3702) in escrow account funds from the 6th Street Roadway Project (T15116200) to the Sacramento Intermodal Facility Project (T15029000).

Section 5. The FY2013/14 CIP is amended by appropriating $88,533 (Fund 3703) in federal funds to the Sacramento Intermodal Facility Project (T15029000) when funding is obligated.

Section 6. The FY2013/14 CIP is amended by reducing the total 5th Street and

Railyards Boulevard Project budget by $100,000 to $28,800,000.

Section 7. The plans, specifications and estimate for the West Tunnel Ramps Access Project are hereby approved.

Section 8. The contract for the West Tunnel Ramps Access Project is awarded to B&M Builders for an amount not to exceed $1,334,304.

Section 9. The City Manager is authorized to execute a Professional Services Agreement for construction management with Vali Cooper & Associates in an amount not to exceed $167,811.

Section 10. Exhibit A is hereby incorporated as part of this Resolution.

Table of Contents:

Exhibit A: Location Map

Back to Report Table of Contents

EXHIBIT A

Location Map for
SACRAMENTO INTERMODAL TRANSPORTATION FACILITY (SITF)
(T15029000)

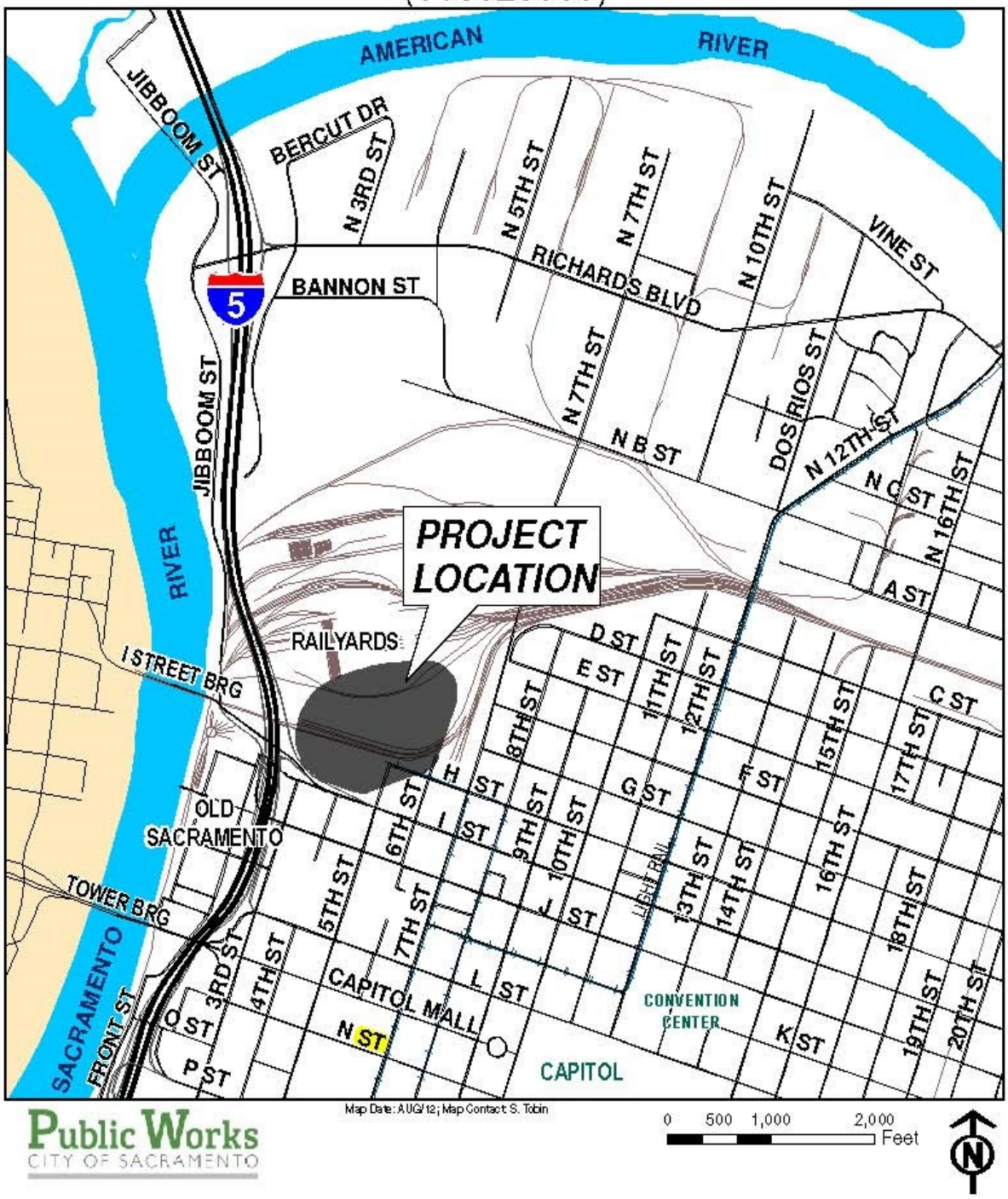

Public Works
CITY OF SACRAMENTO

Back to Report Table of Contents

FIRST AMENDMENT TO PROJECT DELIVERY AGREEMENT

This First Amendment to Project Delivery Agreement (the "**First Amendment**") is dated _____, 2014, for reference, and is between IA SACRAMENTO HOLDINGS, L.L.C., a Delaware limited liability company ("**IA Holdings**") and the City of Sacramento, a municipal corporation (the "**City**"). IA Holdings and the City are collectively referred to herein as the "Parties."

RECITALS

A. The City and IA Holdings entered into that certain Project Delivery Agreement, dated as of February 28, 2013 (the "**Agreement**", identified as City Agreement 2013-0238), related to the construction of the Roadway Project. Under section 6.1 of the Agreement, the City estimates that the Fee to be paid by IA Holdings for the City's services under the Agreement will not exceed $225,000. Based on performance of the Agreement to-date, the Parties agree that the estimate should be reduced to $125,000.

B. The City is willing to enter into this First Amendment contingent on the Parties executing an amendment to that certain Amended and Restated 6th Street Roadway Project Escrow Agreement, dated as of December 13, 2002 (City Agreement 2012-1018) (the "**6th Street Escrow Agreement**").

C. IA Holdings and the City desire to amend the Agreement as set forth in this First Amendment.

AGREEMENT

With these background facts in mind, the City and IA Holdings agree as follows:

1. Definitions. Capitalized terms defined in the Agreement, which are used in this First Amendment and not otherwise defined, shall have the same meaning as in the Agreement.

2. Payment for Services. Section 6.1 of the Agreement is hereby deleted in its entirety and replaced with the following language:

> "In consideration of the City's services provided under this Agreement, IA Holdings shall pay the City on a time and materials basis calculated in accordance with the hourly rates as approved by the Public Works Engineering Division Manager (the "Fee"). The City estimates that the Fee shall not exceed One Hundred Twenty-Five Thousand Dollars ($125,000.00), but this is an estimate only. In the event that the total amount due to the City under this Agreement reaches $125,000.00, then unless IA Holdings agrees to pay the City for its actual time and materials in excess of $125,000.00, the City may terminate this Agreement and the Construction Contracts. The Fee does not include costs typically associated with roadway projects, such as plan check fees, surveying fees, and electrical/traffic signal turn-on costs; IA Holdings is responsible for payment of these fees."

3. **All Other Terms Remain in Force.** Except as modified by this First Amendment, the terms of the Agreement remain unchanged. If there is any inconsistency between the Agreement and this First Amendment, the terms of this First Amendment shall control.

4. **Counterparts.** This First Amendment may be executed in two or more counterparts, each of which shall be deemed to be an original but all of which together shall constitute one and the same instrument. Facsimiles, pdfs, and photocopies of signature pages of this First Amendment have the same binding effect as originals.

5. **Effective Date.** This First Amendment is effective only if the parties execute the First Amendment to the 6th Street Escrow Agreement in the form of Exhibit 1 attached hereto.

IN WITNESS WHEREOF, IA Holdings and the City have duly executed this First Amendment as of the date first set forth above.

IA Holdings: IA Sacramento Holdings, L.L.C., a Delaware limited liability company

By: IA Sacramento Development VP, L.L.C., a Delaware limited liability company, its sole member

By: Inland American Real Estate Trust, Inc., a Maryland corporation, its sole member

By: Jack Potts

Its: Treasurer

Date: May 7, 2014

City: City of Sacramento, a municipal corporation

By:_____
John F. Shirey
City Manager

Date: _____, 2014

Approved as to Legal Form

By:_____
Michael Sparks
Senior Deputy City Attorney

Attest:

By:_____
City Clerk

Exhibit 1

FIRST AMENDMENT TO AMENDED AND RESTATED 6TH STREET ROADWAY PROJECT ESCROW AGREEMENT

This First Amendment to Amended and restated 6th Street Roadway Project Escrow Agreement (the "**First Amendment**") is dated May ___, 2014, for reference, and is by and between IA SACRAMENTO HOLDINGS, L.L.C., a Delaware limited liability company (the "**Owner**"), the City of Sacramento, a municipal corporation (the "**City**"), and CHICAGO TITLE INSURANCE COMPANY (the "**Escrowee**").

RECITALS

A. Owner, Escrowee, and City entered into that certain 6th Street Roadway Project Escrow Agreement, dated as of December 20, 2010, identified as City Agreement 2011-0019, as amended by that certain First Amendment to 6th Street Roadway Project Escrow Agreement, dated as of February 27, 2011 (collectively, the "**Original Agreement**"). The parties then amended and completely restated and superseded the Original Agreement in its entirety by entering into that certain Amended and Restated 6th Street Roadway Project Escrow Agreement, dated as of December 13, 2012, identified as City Agreement 2012-1018 (the "**Amended Agreement**").

B. The 6th Street Roadway Project is nearly complete, and the City estimates that upon completion of the 6th Street Roadway Project, approximately Seven Hundred Fifty Thousand and 00/100 Dollars ($750,000.00) in Escrow Funds will remain in the escrow account established under the Amended Agreement. The Amended Agreement provides that up to $500,000 of Escrow Funds remaining in the escrow account upon completion of the 6th Street Roadway Project can, at the request of the City, be transferred to the escrow account established under the Track Relocation Project Escrow Agreement, dated as of January 27, 2011 (identified as City Agreement 2011-0196) (the "**Track Relocation Escrow Agreement**") as more particularly set forth in this Amended Agreement. The Track Relocation Project and Railyards Improvements have been completed and the track relocation escrow agreement was closed.

C. The City is preparing to undertake the West Tunnel Access Improvement Project (PT15029030) (the "**Access Project**") adjacent to the Property to improve pedestrian access to the West Tunnel, which is located on the Property. The City and Owner agree that a portion of the Escrow Funds remaining in the escrow account upon completion of the 6th Street Roadway Project may be used to pay costs incurred in connection with the completion of the Access Project in accordance with the terms and conditions set forth in the Amended Agreement, as amended by this First Amendment.

D. Owner is willing to enter into this First Amendment contingent on the City and Owner executing an amendment to that certain Project Delivery Agreement, dated as of February 28, 2013 (City Agreement 2013-0238) in the form of Exhibit 1 attached hereto.

AGREEMENT

With these background facts in mind, the Owner, City, and Escrowee agree as follows:

1. **Definitions and Interpretation**. Capitalized terms defined in the Amended Agreement, which are used in this First Amendment and not otherwise defined, shall have the same meaning as in the Amended Agreement. All references to the 6th Street Roadway Project in Paragraph 3 and Paragraphs 5.1(b), 5.1(c), and 5.1(d) of the Amended Agreement are deemed to refer to the 6th Street Roadway Project or the Access Project, as the case may be, except in the context of Additional City Costs, which shall be deemed only to refer to the 6th Street Roadway Project.

2. **Additional City Costs**. Paragraph 4(d)(i) of the Amended Agreement is hereby deleted in its entirety and replaced with the following language:

> (i) "Additional City Costs. If there are any Additional City Costs (as defined in Paragraph 3(a) above) for which City is entitled to reimbursement from Escrow Funds, then City may deliver to Escrowee and Owner a Disbursement Request and Supporting Documentation for payment of such Additional City Costs provided that such Disbursement Request is received by Escrowee no later than ninety (90) days after the recording of the notice of completion of the 6th Street Roadway Project. The procedures in Paragraph 4(a) will govern a Disbursement Request from City for Additional City Costs."

3. **Access Project**. Paragraph 4(d)(ii) of the Amended Agreement is hereby deleted in its entirety and replaced with the following language:

> "Access Project. After the payment of Additional City Costs, if any, the remaining Escrow Funds will remain on deposit with Escrowee for purposes of helping the City to pay for the Access Project (the "**Access Project Funds**") in accordance with the terms and conditions set forth in this Amended Agreement; provided, however, in no event shall the Access Project Funds exceed the amount of Seven Hundred Fifty Thousand and 00/100 Dollars ($750,000.00) ("**Access Project Cap**"). The Access Project Funds shall be used to pay the costs described in Paragraph 3 of this Amended Agreement up to the amount of the Access Project Cap except that there are no Owner Costs associated with the Access Project. Escrowee shall make distributions to pay the Eligible Costs for the Access Project as set forth in Paragraph 4(a). The parties hereby acknowledge and agree that the conditions precedent in Paragraphs 5.1(b), 5.1(c), and 5.1(d) apply to the disbursements from the Access Project Funds for the Access Project. The parties hereby further agree that the terms in Paragraphs 5.1(a), 5.2, 5.3, 5.4, 5.5, 5.6, and 5.7 do not apply to disbursements for the Access Project from the Access Project Funds."

4. **Release to Owner**. Paragraph 4(d)(iii) of the Amended Agreement is hereby deleted in its entirety and replaced with the following language:

> "Release to Owner. Upon the earlier of (i) disbursement of the Access Project Funds in the amount of the Access Project Cap or (ii) completion of the Access Project, as evidenced by the recording of a notice of completion in the Sacramento Recorder's Office, Escrowee shall release to Owner any Escrow Funds that remain after the payment of any costs permitted under Paragraph 4(d)(i) and the payment of the Access Project Funds pursuant to Paragraph 4(d)(ii) above."

5. **All Other Terms Remain in Force.** Except as modified by this First Amendment, the terms of the Amended Agreement remain unchanged. If there is any inconsistency between the Amended Agreement and this First Amendment, the terms of this First Amendment control.

6. **Counterparts**. This First Amendment may be executed in two or more counterparts, each of which shall be deemed to be an original but all of which together shall constitute one and the same instrument. Facsimiles, pdfs, and photocopies of signature pages of this First Amendment have the same binding effect as originals.

7. **Effective Date**. This First Amendment is effective only if the City and Owner execute the first amendment to project delivery agreement in the form of Exhibit 1.

[signature page follows]

Owner: IA Sacramento Holdings, L.L.C., a Delaware limited liability company

By: IA Sacramento Development VP, L.L.C.,
a Delaware limited liability company, its sole member

By: Inland American Real Estate Trust, Inc.,
a Maryland corporation, its sole member

By: _____
Its: _____

Date: _____, 2014

City: City of Sacramento, a municipal corporation

By: _____
Name: Francesca Halbakken
2. Title: Operations Manager
3.
4. Date: _____, 2014

Approved as to Legal Form

By:_____
Senior Deputy City Attorney
Attest:

By:_____
City Clerk

ESCROWEE: Chicago Title Insurance Company

By: _____
Name: Nancy R. Castro
5. Title: Resident Vice President & CCC Escrow Manager

Date: _____, 2014

Back to Report Table of Contents

FIRST AMENDMENT TO AMENDED AND RESTATED 6TH STREET ROADWAY PROJECT ESCROW AGREEMENT

This First Amendment to Amended and restated 6th Street Roadway Project Escrow Agreement (the "**First Amendment**") is dated May ___, 2014, for reference, and is by and between IA SACRAMENTO HOLDINGS, L.L.C., a Delaware limited liability company (the "**Owner**"), the City of Sacramento, a municipal corporation (the "**City**"), and CHICAGO TITLE INSURANCE COMPANY (the "**Escrowee**").

RECITALS

A. Owner, Escrowee, and City entered into that certain 6th Street Roadway Project Escrow Agreement, dated as of December 20, 2010, identified as City Agreement 2011-0019, as amended by that certain First Amendment to 6th Street Roadway Project Escrow Agreement, dated as of February 27, 2011 (collectively, the "**Original Agreement**"). The parties then amended and completely restated and superseded the Original Agreement in its entirety by entering into that certain Amended and Restated 6th Street Roadway Project Escrow Agreement, dated as of December 13, 2012, identified as City Agreement 2012-1018 (the "**Amended Agreement**").

B. The 6th Street Roadway Project is nearly complete, and the City estimates that upon completion of the 6th Street Roadway Project, approximately Seven Hundred Fifty Thousand and 00/100 Dollars ($750,000.00) in Escrow Funds will remain in the escrow account established under the Amended Agreement. The Amended Agreement provides that up to $500,000 of Escrow Funds remaining in the escrow account upon completion of the 6th Street Roadway Project can, at the request of the City, be transferred to the escrow account established under the Track Relocation Project Escrow Agreement, dated as of January 27, 2011 (identified as City Agreement 2011-0196) (the "**Track Relocation Escrow Agreement**") as more particularly set forth in this Amended Agreement. The Track Relocation Project and Railyards Improvements have been completed and the track relocation escrow agreement was closed.

C. The City is preparing to undertake the West Tunnel Access Improvement Project (PT15029030) (the "**Access Project**") adjacent to the Property to improve pedestrian access to the West Tunnel, which is located on the Property. The City and Owner agree that a portion of the Escrow Funds remaining in the escrow account upon completion of the 6th Street Roadway Project may be used to pay costs incurred in connection with the completion of the Access Project in accordance with the terms and conditions set forth in the Amended Agreement, as amended by this First Amendment.

D. Owner is willing to enter into this First Amendment contingent on the City and Owner executing an amendment to that certain Project Delivery Agreement, dated as of February 28, 2013 (City Agreement 2013-0238) in the form of Exhibit 1 attached hereto.

AGREEMENT

With these background facts in mind, the Owner, City, and Escrowee agree as follows:

1. **Definitions and Interpretation**. Capitalized terms defined in the Amended Agreement, which are used in this First Amendment and not otherwise defined, shall have the same meaning as in the Amended Agreement. All references to the 6th Street Roadway Project in Paragraph 3 and Paragraphs

5.1(b), 5.1(c), and 5.1(d) of the Amended Agreement are deemed to refer to the 6th Street Roadway Project or the Access Project, as the case may be, except in the context of Additional City Costs, which shall be deemed only to refer to the 6th Street Roadway Project.

2. **Additional City Costs**. Paragraph 4(d)(i) of the Amended Agreement is hereby deleted in its entirety and replaced with the following language:

> (i) "Additional City Costs. If there are any Additional City Costs (as defined in Paragraph 3(a) above) for which City is entitled to reimbursement from Escrow Funds, then City may deliver to Escrowee and Owner a Disbursement Request and Supporting Documentation for payment of such Additional City Costs provided that such Disbursement Request is received by Escrowee no later than ninety (90) days after the recording of the notice of completion of the 6th Street Roadway Project. The procedures in Paragraph 4(a) will govern a Disbursement Request from City for Additional City Costs."

3. **Access Project**. Paragraph 4(d)(ii) of the Amended Agreement is hereby deleted in its entirety and replaced with the following language:

> "Access Project. After the payment of Additional City Costs, if any, the remaining Escrow Funds will remain on deposit with Escrowee for purposes of helping the City to pay for the Access Project (the "**Access Project Funds**") in accordance with the terms and conditions set forth in this Amended Agreement; provided, however, in no event shall the Access Project Funds exceed the amount of Seven Hundred Fifty Thousand and 00/100 Dollars ($750,000.00) ("**Access Project Cap**"). The Access Project Funds shall be used to pay the costs described in Paragraph 3 of this Amended Agreement up to the amount of the Access Project Cap except that there are no Owner Costs associated with the Access Project. Escrowee shall make distributions to pay the Eligible Costs for the Access Project as set forth in Paragraph 4(a). The parties hereby acknowledge and agree that the conditions precedent in Paragraphs 5.1(b), 5.1(c), and 5.1(d) apply to the disbursements from the Access Project Funds for the Access Project. The parties hereby further agree that the terms in Paragraphs 5.1(a), 5.2, 5.3, 5.4, 5.5, 5.6, and 5.7 do not apply to disbursements for the Access Project from the Access Project Funds."

4. **Release to Owner**. Paragraph 4(d)(iii) of the Amended Agreement is hereby deleted in its entirety and replaced with the following language:

> "Release to Owner. Upon the earlier of (i) disbursement of the Access Project Funds in the amount of the Access Project Cap or (ii) completion of the Access Project, as evidenced by the recording of a notice of completion in the Sacramento Recorder's Office, Escrowee shall release to Owner any Escrow Funds that remain after the payment of any costs permitted under Paragraph 4(d)(i) and the payment of the Access Project Funds pursuant to Paragraph 4(d)(ii) above."

5. **All Other Terms Remain in Force.** Except as modified by this First Amendment, the terms of the Amended Agreement remain unchanged. If there is any inconsistency between the Amended Agreement and this First Amendment, the terms of this First Amendment control.

6. **Counterparts.** This First Amendment may be executed in two or more counterparts, each of which shall be deemed to be an original but all of which together shall constitute one and the same instrument. Facsimiles, pdfs, and photocopies of signature pages of this First Amendment have the same binding effect as originals.

7. **Effective Date**. This First Amendment is effective only if the City and Owner execute the first amendment to project delivery agreement in the form of Exhibit 1.

[signature page follows]

Owner: IA Sacramento Holdings, L.L.C., a Delaware limited liability company

By: IA Sacramento Development VP, L.L.C.,
a Delaware limited liability company, its sole member

By: Inland American Real Estate Trust, Inc.,
a Maryland corporation, its sole member

By: Jack Potts
Its: Treasurer

Date: May 7, 2014

City: City of Sacramento, a municipal corporation

By: _____
Name: Francesca Halbakken
2. Title: Operations Manager
3.
4. Date: _____, 2014

Approved as to Legal Form

By: _____
Senior Deputy City Attorney
Attest:

By: _____
City Clerk

ESCROWEE: Chicago Title Insurance Company

By: _____
Name: Nancy R. Castro
5. Title: Resident Vice President & CCC Escrow Manager

Date: _____, 2014

Exhibit 1

FIRST AMENDMENT TO PROJECT DELIVERY AGREEMENT

This First Amendment to Project Delivery Agreement (the "**First Amendment**") is dated _____, 2014, for reference, and is between IA SACRAMENTO HOLDINGS, L.L.C., a Delaware limited liability company ("**IA Holdings**") and the City of Sacramento, a municipal corporation (the "**City**"). IA Holdings and the City are collectively referred to herein as the "Parties."

RECITALS

A. The City and IA Holdings entered into that certain Project Delivery Agreement, dated as of February 28, 2013 (the "**Agreement**", identified as City Agreement 2013-0238), related to the construction of the Roadway Project. Under section 6.1 of the Agreement, the City estimates that the Fee to be paid by IA Holdings for the City's services under the Agreement will not exceed $225,000. Based on performance of the Agreement to-date, the Parties agree that the estimate should be reduced to $125,000.

B. The City is willing to enter into this First Amendment contingent on the Parties executing an amendment to that certain Amended and Restated 6th Street Roadway Project Escrow Agreement, dated as of December 13, 2002 (City Agreement 2012-1018) (the "**6th Street Escrow Agreement**").

C. IA Holdings and the City desire to amend the Agreement as set forth in this First Amendment.

AGREEMENT

With these background facts in mind, the City and IA Holdings agree as follows:

1. Definitions. Capitalized terms defined in the Agreement, which are used in this First Amendment and not otherwise defined, shall have the same meaning as in the Agreement.

2. Payment for Services. Section 6.1 of the Agreement is hereby deleted in its entirety and replaced with the following language:

> "In consideration of the City's services provided under this Agreement, IA Holdings shall pay the City on a time and materials basis calculated in accordance with the hourly rates as approved by the Public Works Engineering Division Manager (the "Fee"). The City estimates that the Fee shall not exceed One Hundred Twenty-Five Thousand Dollars ($125,000.00), but this is an estimate only. In the event that the total amount due to the City under this Agreement reaches $125,000.00, then unless IA Holdings agrees to pay the City for its actual time and materials in excess of $125,000.00, the City may terminate this Agreement and the Construction Contracts. The Fee does not include costs typically associated with roadway projects, such as plan check

fees, surveying fees, and electrical/traffic signal turn-on costs; IA Holdings is responsible for payment of these fees."

3. **All Other Terms Remain in Force.** Except as modified by this First Amendment, the terms of the Agreement remain unchanged. If there is any inconsistency between the Agreement and this First Amendment, the terms of this First Amendment shall control.

3. **Counterparts**. This First Amendment may be executed in two or more counterparts, each of which shall be deemed to be an original but all of which together shall constitute one and the same instrument. Facsimiles, pdfs, and photocopies of signature pages of this First Amendment have the same binding effect as originals.

4. **Effective Date**. This First Amendment is effective only if the parties execute the First Amendment to the 6th Street Escrow Agreement in the form of exhibit 1 attached hereto.

IN WITNESS WHEREOF, IA Holdings and the City have duly executed this First Amendment as of the date first set forth above.

IA Holdings: IA Sacramento Holdings, L.L.C., a Delaware limited liability company

By: IA Sacramento Development VP, L.L.C., a Delaware limited liability company, its sole member

By: Inland American Real Estate Trust, Inc., a Maryland corporation, its sole member

By:_____

Its:_____

Date: _____, 2014

City: City of Sacramento, a municipal corporation

By:_____
John F. Shirey
City Manager

Date: _____, 2014

Approved as to Legal Form

By:_____
Michael Sparks
Senior Deputy City Attorney

Attest:

By:_____
City Clerk

Back to Report Table of Contents

SPECIAL PROVISIONS

NOTICE TO CONTRACTORS

PROPOSAL AND CONTRACT

FOR

WEST TUNNEL RAMPS ACCESS PROJECT

IN

CITY OF SACRAMENTO

FEDERAL AID PROJECT NO: HPLUL-5002(167)

CITY PROJECT NO: (PN: T15029031)

For use with City of Sacramento Standard Specifications for Public Construction Dated June, 2007, Davis Bacon Wage Rates Dated December 6, 2013 or State of California Prevailing Wage Rates (Higher Rate Prevails) and Labor Surcharge and Equipment Rental Rates.

For Pre-Bid Information Call:
Name, Marc Lee
TEL: (916) 808-7481
FAX: (916) 448-8450
mlee@cityofsacramento.org

Bids to be received before
2:00 PM, Wednesday, January 15, 2014
1st Floor, Historic City Hall
915 I Street, Sacramento, CA 95814

Pre-Bid Meeting:
January 8, 2013 at 2:00 PM
Historic City Hall
915 I Street
Historic Council Chambers
Sacramento, CA 95814

Engineer's Construction Estimate: $1,393,900

Construction Time: 55 working days

DEPARTMENT OF
TRANSPORTATION

ENGINEERING SERVICES DIVISION

CITY OF SACRAMENTO
CALIFORNIA

915 I STREET, ROOM 2000
SACRAMENTO, CA
95814-2700

PH. (916) 808-8300
FAX (916) 808-8281

West Tunnel Ramps Access (T15029031)

Addendum No. 1

January 7, 2014

To all Potential Bidders:

Attached hereto are addenda items, which shall be incorporated into the bid proposal for above noted project. These changes shall be considered as part of the original documents, as if they were originally provided therein, and as such shall be used as contractual documents. All other terms, conditions, and specifications of the bid remain unchanged. Bidders must acknowledge receipt of this addendum prior to the hour and date specified in the bid request, or as amended, by one of the following methods:

(a) By acknowledging receipt, on the bid proposal form submitted; or
(b) By separate letter or telegram which includes a reference to the bid request and addendum number.

Failure to acknowledge receipt of this addendum in one of the above methods and cause acknowledgment to be received prior to the hour and date specified for receipt of proposals, **may result in rejection of your offer.** If by virtue of this addendum you decide to change an offer already submitted, such change may be made by telegram or letter, provided such telegram or letter makes reference to the bid request number and this addendum, and is received prior to the opening hour and date specified.

For any questions related to this Addendum, contact the Project Manager, Kaleb Haile at (916) 808-7020 or KHaile@cityofsacramento.org.

Jose R. Lalo

Contract Services

West Tunnel Ramps Access (T15029031)
Addendum No. 1

Item #1 The pre-bid meeting time and place have been changed to the following:

January 8, 2014 at 1:30 PM
At New City Hall, Room 2105
915 I St, Sacramento, CA 95814

Item #2 **New bid submittal location.** Bids must be submitted to the Office of the City Clerk, 915 I Street, New City Hall, 4th Floor Public Counter, Sacramento, CA 95814. Allow time to provide a valid ID to the security desk to receive a visitor badge. You will not be granted access to the 4th floor unless you have a visitor badge.

DEPARTMENT OF
TRANSPORTATION

ENGINEERING SERVICES DIVISION

CITY OF SACRAMENTO
CALIFORNIA

915 I STREET, ROOM 2000
SACRAMENTO, CA
95814-2700

PH. (916) 808-8300
FAX (916) 808-8281

West Tunnel Ramps Access (T15029031)

Addendum No. 2

January 10, 2014

To all Potential Bidders:

Attached hereto are addenda items, which shall be incorporated into the bid proposal for above noted project. These changes shall be considered as part of the original documents, as if they were originally provided therein, and as such shall be used as contractual documents. All other terms, conditions, and specifications of the bid remain unchanged. Bidders must acknowledge receipt of this addendum prior to the hour and date specified in the bid request, or as amended, by one of the following methods:

(a) By acknowledging receipt, on the bid proposal form submitted; or
(b) By separate letter or telegram which includes a reference to the bid request and addendum number.

Failure to acknowledge receipt of this addendum in one of the above methods and cause acknowledgment to be received prior to the hour and date specified for receipt of proposals, **may result in rejection of your offer.** If by virtue of this addendum you decide to change an offer already submitted, such change may be made by telegram or letter, provided such telegram or letter makes reference to the bid request number and this addendum, and is received prior to the opening hour and date specified.

For any questions related to this Addendum, contact the Project Manager, Marc Lee at (916) 808-7481 or Mlee@cityofsacramento.org.

Very truly yours,

Jose R. Ledesma
Contract Services

West Tunnel Ramps Access (T15029031)
Addendum No. 2

Item #1 The Bid Due Date has changed to January 22, 2014.

Item #2 Pre-Bid Meeting sign in sheet is attached.

Item #3 Existing Contours diagram is attached.

Item #4 Section 4, "Beginning of work, time of completion and Liquidated Damages", paragraph 4 has the following edit:

Liquidated damages will also be assessed if the entire CSRM parking lot (that is in the scope of this project) is not available to park in after sixty ***calendar*** days from the date of the NTP. Should said CSRM parking lot not be available for parking, the Contractor shall pay to the City of Sacramento a sum of Two Thousand Dollars ($2,000.00) as liquidated damages for each calendar day delay after sixty days from the NTP until the entire CSRM parking lot (that is in the scope of this project) is available for parking.

Item #5 Bid item 23 "Roadway Excavation and Grading" is a final pay item. The bid proposal has been updated to reflect that this item is a final pay item.

Item #6 Segments of rail provided by the City for bid item 40 "Railroad Track to install" are predominantly 33-feet long segments.

Item #7 The following Weather provision is being added to Section 9 "General Requirements":

9.55 Weather Provision

It is anticipated temperatures will be sufficient to place seal coat and striping. Should the weather not be acceptable contractor shall notify the engineer and provide a plan to place both at the earliest possible date and also coordinate with affected stakeholders (Parking, California State Railroad Museum, Amtrak, etc) to minimize impacts and provide necessary access. No additional compensation will be provided due to delay of work caused by weather conditions.

Item #8 The following sheets that have been updated to clarify the height of the picket and chain link fences are attached:

C-3, C-4, C-6, C-7, C-10, C-13, C-14, C-15

Item #9 The Standard details for Ornamental Streetlights detail is attached to provide the foundation and sealant detail and Ornamental Street Style 1 detail to be applied to this project.

City of Sacramento, Public Works

West Tunnel Ramps Access (PN: T15029031)

January 8, 2014

Name	Contractor	Phone #	Email	DBE (Y/N)
Brenda Kee	City of Sacramento	916-808-1923	BKee@cityofsacramento.org	N/A
Hinda Chandler	City of Sacramento	916-808-8422	hchandler@cityofsacramento.org	NA
MATT EIERMAN	CITY OF SACRAMENTO	916 808 5849	MEIERMAN@CITY OF SACRAMENTO.ORG	N/A
Hank Doll	Vali Cooper	(916)826-3038	hank.doll@valicooper.com	N/A
Kelly Mielbrecht	" "	253-253-6554	Kelly.mielbrecht@valicooper.com	N/A
HARRY GOBLER	CALIF. STATE RAILROAD MUSEUM	(916)324-3803	harry.gobler@parks.ca.gov	N/A
Matt Brogan	Mark Thomas & Co	916-331-4100	mbrogan@markthomas.com	N/A
Todd Lewis	" "	" "	tlewis@markthomas.com	N/A
Steve Keating	Western Engineering	916) 652-3970	skeating@westeng.com	N
Marc Lee	mlee@cityofsacramento.org	(916)808-7481	city of sac.	N/A
Kyle Ferguson	SNC	(775)355-0420	bids@snc.biz	N/A
Marcin Biernacki	McGuire & Hester	(916)372-8910	Estimating@mcguireandhester.com	N/A
Patrick Spencer	Granite	916 855-4400	patrick.spencer@gcinc.com	N/A
Scott Edwards	Granite	916-855-4400	scott.edwards@gcinc.com	N/A
Sheri Angel	C+C Construction, Inc	916-434-5280	sangelccconst@surewest.net	N/A
JAIME DAVILA	NAVAJO PIPELINES INC	916 417-0417	Jaimenavajo@Yahoo.com	

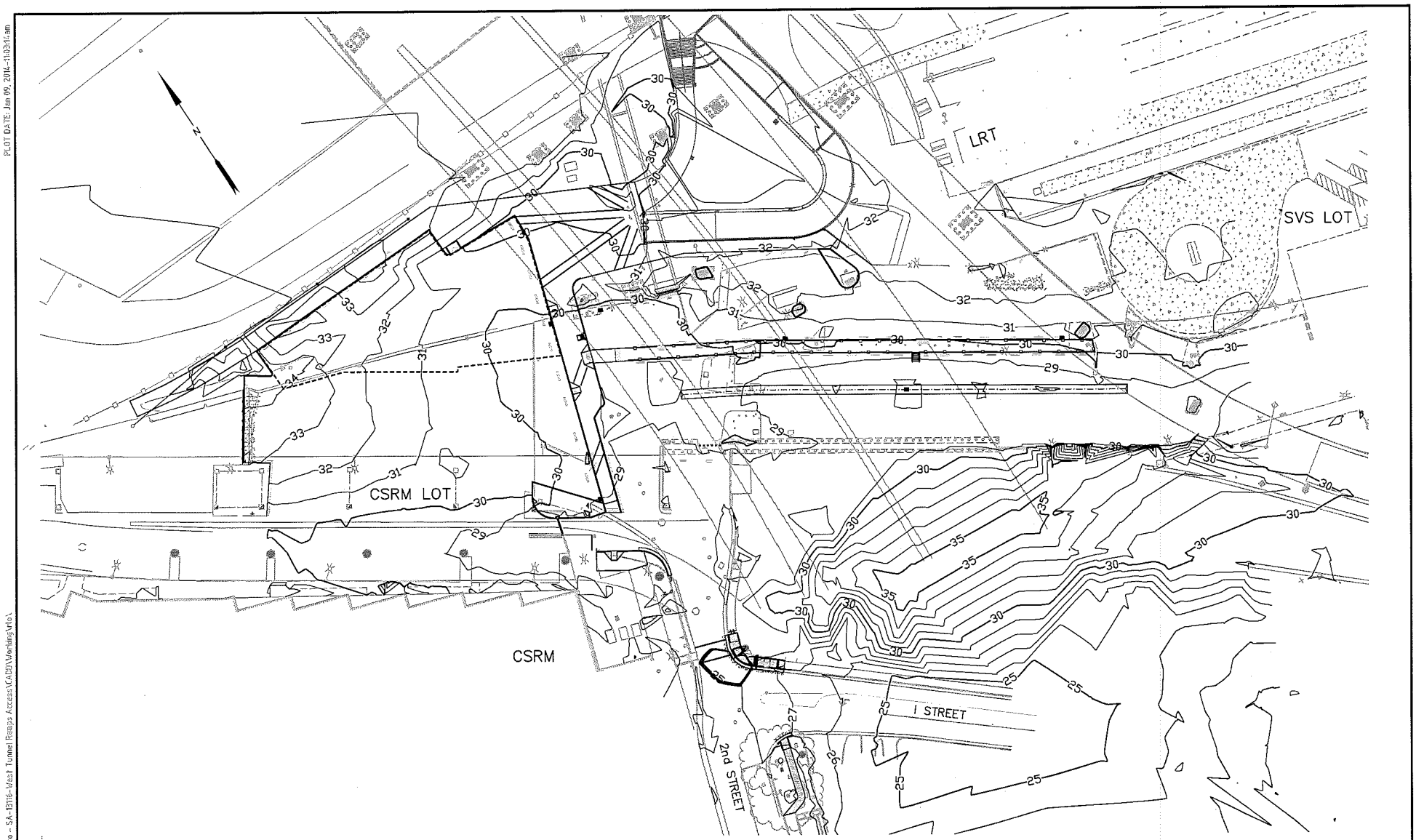

REVISIONS			
NO.	DESCRIPTION	DATE	BY

BENCH MARK ELEV. 29.38 Ft
DESCRIPTION BENCHMARK# 297-C3D
BRONZE MONUMENT STAMPED "USGS-147-M-29-1933" SW CORNER OF POST OFFICE AT WEST ENTRANCE. 29 FEET NORTH OF SW CORNER OF BUILDING AND 4 FEET SOUTH OF THE WEST ENTRANCE IN THE TOP OF GRANITE SLAB AT TOP OF STEPS. NE CORNER 8TH AND I STREETS.

FIELD BOOK

SCALE
HORIZ. 1"=30'
VERT. ____

CITY OF SACRAMENTO
DEPARTMENT OF PUBLIC WORKS

DRAWN BY: J.TJI
DATE NOVEMBER, 2013

DESIGNED BY: T.LEWIS
R.C.E. 61905 DATE NOV. 2013

CHECKED BY: R.M. BROGAN
R.C.E. 63854 DATE NOV. 2013

MARK THOMAS & COMPANY, INC.
7330 FOLSOM BOULEVARD, SUITE 203
SACRAMENTO, CALIFORNIA 95828

UNDER THE SUPERVISION OF: R. MATTHEW BROGAN
63854 R.C.E. 9-30-14 exp.

IMPROVEMENT PLANS FOR
WEST TUNNEL RAMPS ACCESS PROJECT
EXISTING CONTOURS

PN: T15029031

SHEET ___ OF ___

CAD FILE: V:\Sacramento - SA-1316-West Tunnel Ramps Access\CADD\Working\rto\

PLOT DATE: Jan 09, 2014-11:03:14am

TO THE HONORABLE CITY COUNCIL
SACRAMENTO, CALIFORNIA:

In compliance with the Contract Documents, the undersigned hereby proposes to furnish all required labor, materials, supervision, transportation, equipment, services, taxes and incidentals required for:

WEST TUNNEL RAMPS ACCESS PROJECT
(PN: T15029031)
(Revised on 1/10/14)

in the City and County of Sacramento, California.

The Work is to be done in strict conformity with the Contract Documents now on file in the Office of the City Clerk, for the following sum:

Item No.	Item	Estimated Quantity	Unit	Unit Price	Total
1	Preconstruction Photographs	1	LS	$	$
2	Prepare Storm Water Pollution Prevention Plan	1	LS	$	$
3	Storm Water Annual Report	1	LS	$	$
4	Construction Site Management	1	LS	$	$
5	Traffic Control Systems	1	LS	$	$
6	Clearing and Grubbing	1	LS	$	$
7	Bollard to Remove	42	EA	$	$
8	Traffic Stripe and Pavement Markings to Remove	1	LS	$	$
9	Pavement Markers to Remove	1	LS	$	$
10	Pedestrian Boardwalk to Remove	325	SF	$	$
11	Concrete Curb, Gutter and Sidewalk to Remove	390	SF	$	$
12	Concrete Curb to Remove	110	LF	$	$
13	Concrete Valley Gutter to Remove	1,650	SF	$	$

14	Concrete Island to Remove	2,670	SF	$	$
15	Concrete Tunnel Headwall and Wingwalls to Remove	65	SF	$	$
16	Existing Fence to Remove	500	LF	$	$
17	Existing Gate to Remove	1	EA	$	$
18	Storm Drain Inlet to Remove	2	EA	$	$
19	Parking Booth to Remove	1	EA	$	$
20	Pay Station Shelter to Relocate	1	EA	$	$
21	Purple Martin Pole to Relocate	3	EA	$	$
22	Storm Drain Pipe to Abandon	38	LF	$	$
23	Roadway Excavation and Grading (F)	3,160	CY	$	$
24	Aggregate Base Class 2 to Place	1,460	CY	$	$
25	Curb and Gutter Type 1 to Construct	9	LF	$	$
26	Curb and Gutter Type 2 to Construct	100	LF	$	$
27	Curb Type 3 to Construct	830	LF	$	$
28	Curb Type 3 (Modified) To Construct	120	LF	$	$
29	Wheel Stop to Install	77	EA	$	$
30	PCC Edge Wall to Install	550	LF	$	$
31	Concrete Stairway to Construct	30	SF	$	$
32	Minor Concrete (Valley Gutter) to Construct	305	LF	$	$

33	Concrete Island to Construct	440	SF	$	$
34	4" PCC Sidewalk to Construct	11,900	SF	$	$
35	4" Colored PCC Sidewalk to Construct	1,850	SF	$	$
36	PCC Pedestrian Walkway to Construct	5,100	SF	$	$
37	Truncated Domes on New Ramps (36" x 48")	21	EA	$	$
38	Truncated Domes on New Ramps (36" x 60")	1	EA	$	$
39	Chain Link Fence to Install	50	LF	$	$
40	Railroad Track to Install	460	LF	$	$
41	Pedestrian Railing To Install	15	LF	$	$
42	Picket Fence to Install	630	LF	$	$
43	Pedestrian Barricade to Install	1	EA	$	$
44	Bollards to Install	8	EA	$	$
45	Gutter Drain No.20 to Construct	4	EA	$	$
46	Gutter Drain No.20 (Modified) to Construct	2	EA	$	$
47	3" PVC Storm Drain Pipe to Install	60	LF	$	$
48	12" Storm Drain Pipe to Install	240	LF	$	$
49	Slurry Seal Type 2 to Place	5,700	SY	$	$

50	Cold Plane AC Pavement (0.17" Max)	340	SY	$	$
51	Hot Mix Asphalt (3/4") Pavement to Place	970	TON	$	$
52	Hot Mix Asphalt (1/2") Pavement to Place	430	TON	$	$
53	Roadside Sign to Remove	13	EA	$	$
54	Roadside Sign to Relocate	1	EA	$	$
55	Roadside Sign to Place	22	EA	$	$
56	Thermoplastic Traffic Stripe to Place	110	LF	$	$
57	Thermoplastic Pavement Marking to Place	3,000	SF	$	$
58	Pavement Marker to Place	202	EA	$	$
59	Painted Pavement Stripe to Place	6,600	LF	$	$
60	Painted Stall Markings to Place	1	LS	$	$
61	Audio Bird Control Device to Install	1	LS	$	$
62	Automatic Irrigation System to Install	1	LS	$	$
63	Soil Preparation and Finish Grading	1	LS	$	$
64	Shrubs to Plant	1	LS	$	$
65	Landscape Maintenance	1	LS	$	$
66	Parking Lot Lighting Installation	1	LS	$	$

67	Permeable Interlocking Pavers	13,900	SF	$ _____	$ _____
68	Mobilization (5%)	1	LS	$ _____	$ _____

(F) – denotes final pay quantity

CONTRACTOR NAME: _____ TOTAL $_____

It is understood that this Bid Proposal is based upon completion of the Work within a period of **Fifty-Five (55) WORKING DAYS,** commencing on the date set forth in the written Notice to Proceed issued by the City to the Contractor.

In determining the amount bid by each bidder, the City may disregard mathematical errors in addition, subtraction, multiplication, and division that appear obvious on the face of the Proposal. When such a mathematical error appears on the face of the Proposal, the City shall have the right to correct such error and to compute the total amount bid by said bidder on the basis of the corrected figure or figures.

The City Council may reject any and all bids and waive any informalities or minor irregularities in the bids.

When an item price is required to be set forth in the Proposal, and the total for the item set forth separately does not agree with a figure which is derived by multiplying the item price times the Engineer's estimate of the quantity of work to be performed for said item, the item price shall prevail over the sum set forth as the total for the item unless, in the sole discretion of the City, such a procedure would be inconsistent with the policy of the bidding procedure. The total paid for each such item of work shall be based upon the item price and not the total price. Should the Proposal contain only total price for the item and the item price is omitted, the City shall determine the item price by dividing the total price for the item by the Engineer's estimate of the estimated quantities of work to be performed as items of work.

If the Proposal contains neither the item price nor the total price for the item, then it shall be deemed incomplete and the Proposal shall be disregarded.

The undersigned has examined the location of the proposed Work, the local conditions at the place where the Work is to be done, is familiar with the Contract Documents and is familiar and expressly agrees to the liquidated damages provision of the Contract Documents.

The undersigned has checked carefully all of the foregoing figures and understands that the City of Sacramento will not be responsible for any errors or omissions on the part of the undersigned in making up this Bid Proposal.

Enclosed is a Bid Proposal Guarantee, as required, consisting of a bidder's bond or other acceptable security for not less than ten percent (10%) of the amount Bid Proposal.

The undersigned agrees that all addenda received and acknowledged herein shall become a part of and be included in this Bid Proposal. This Bid Proposal includes the following addenda:

Add. # _____ DATE _____

Add. # _____ DATE _____

Add. # _____ DATE _____

NOTE: State whether your concern is a corporation, a co-partnership, private individual, or individuals doing business under a firm name.

_____

If the Bidder is a corporation, the Bid Proposal must be executed in the name of the corporation and must be signed by a duly authorized officer of the corporation.

If the Bidder is a partnership, the Bid Proposal must be executed in the name of the partnership and one of the partners must subscribe their signature thereto as the authorized representative of the partnership.

AMOUNT OF BID PROPOSAL GUARANTEE ENCLOSED:

($_____) not less than ten percent (10%) of amount Bid Proposal

_____ CERTIFIED CHECK
_____ CASHIER'S CHECK
_____ BID BOND
_____ MONEY ORDER
_____ OTHER SECURITY

CONTRACTOR:

By _____
(Signature)

_____
(Print or Type)

Title _____
Address _____
_____
Telephone No. _____

Fax No. _____

mail Address _____

Date _____

FOR CITY USE ONLY

Bid Bond Security
☐ Properly Signed ☐ *Improperly Signed*
☐ *Not Included* ☐ Not Required

Type of Deposit
☐ Bid Bond ☐ Cashier/Certified Check
☐ Other_____ Initial:_____

Contractor's License No. _____ Type _____

Expiration Date _____

Tax I.D. Nos.- Fed. _____ State _____

City of Sacramento Business Operation Tax Certificate No. _____
(City will not award contract if Certificate Number is missing.)

Please indicate if you are any of the following:

EBE_____ Cert #_____ SBE_____ Cert #_____

UDBE_____Cert #_____ M/WBE_____Cert #_____

NOTES

1. SEE LAYOUT SHEETS FOR TYPE OF CURB AND LIMITS.
2. SEE CONSTRUCTION DETAILS FOR LIMITS OF PICKET FENCE
3. SEE LAYOUT PLANS FOR LIMITS OF PAVEMENT SECTIONS

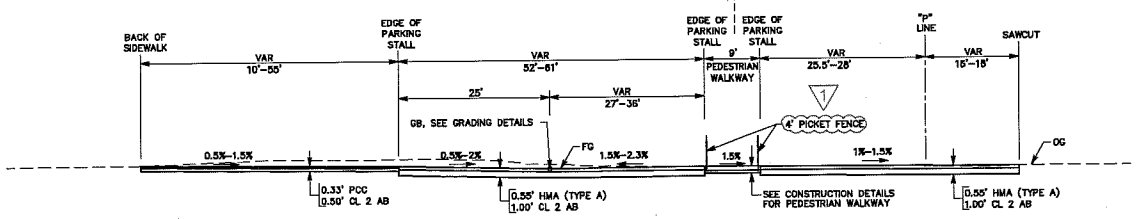

"P 19+84.21 TO 20+44.14
SVS PARKING LOT

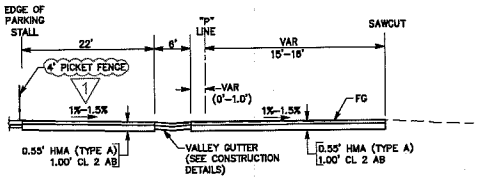

"P 20+28.67 TO 20+44.14
SVS PARKING LOT

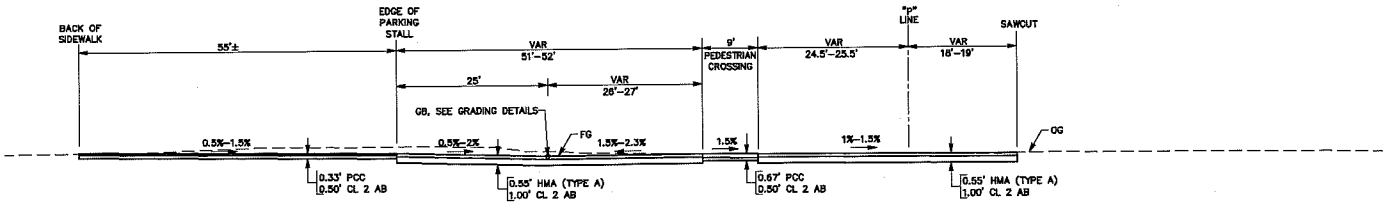

"P" 19+75.73 TO 19+84.21
SVS PARKING LOT

NORTH-SOUTH PEDESTRIAN WALKWAY LOCATED BETWEEN 19+54.94 TO 19+75.72, SEE LAYOUT & CONSTRUCTION DETAIL SHEETS

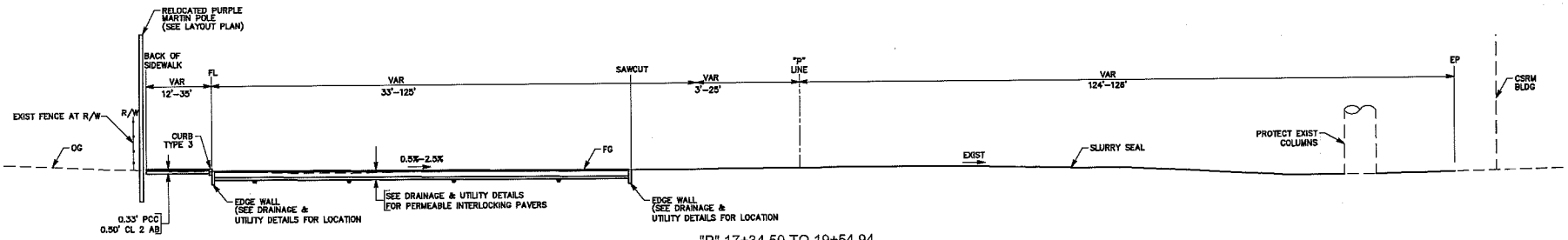

"P" 17+34.50 TO 19+54.94
CSRM PARKING LOT

REVISED PER ADDENDUM No. 1 DATED JANUARY 10, 2014 1

REVISIONS			
NO.	DESCRIPTION	DATE	BY

BENCH MARK ELEV. 29.38 Ft
DESCRIPTION BENCHMARK# 297-C3D
BRONZE MONUMENT STAMPED "1955-147-M-29-1933" SW CORNER OF POST OFFICE AT WEST ENTRANCE, 29 FEET NORTH OF SW CORNER OF BUILDING AND 4 FEET SOUTH OF THE WEST ENTRANCE IN THE TOP OF GRANITE SLAB AT TOP OF STEPS. NE CORNER 8TH AND I STREETS.

FIELD BOOK
SCALE
HORIZ. N.T.S
VERT. N.T.S

CITY OF SACRAMENTO
DEPARTMENT OF PUBLIC WORKS

DRAWN BY: J.T.J DATE NOVEMBER, 2013
DESIGNED BY: T.LEWIS R.C.E. 61905 DATE NOV. 2013
CHECKED BY: R.M. BROGAN R.C.E. 63854 DATE NOV. 2013

MARK THOMAS & COMPANY, INC.
7300 FOLSOM BOULEVARD, SUITE 203
SACRAMENTO, CALIFORNIA 95826
R.M. Br
UNDER THE SUPERVISION OF: R. MATTHEW BROGAN
63854 9-30-14
R.C.E. exp.

IMPROVEMENT PLANS FOR
WEST TUNNEL RAMPS ACCESS PROJECT
TYPICAL SECTIONS

PN: T15029031

SHEET No. 3 OF 34
SHEET C-3 OF 2

CAD FILE: V:\Sacramento - SA-13116-West Tunnel Ramps Access\CADD\Sheets\Roadway Sheets\
FILE NAME: wtra_Typical Sections PLOT DATE: Jan 10, 2014-09:20:56am
PLOT DATE: Jan 10, 2014-09:20:56am

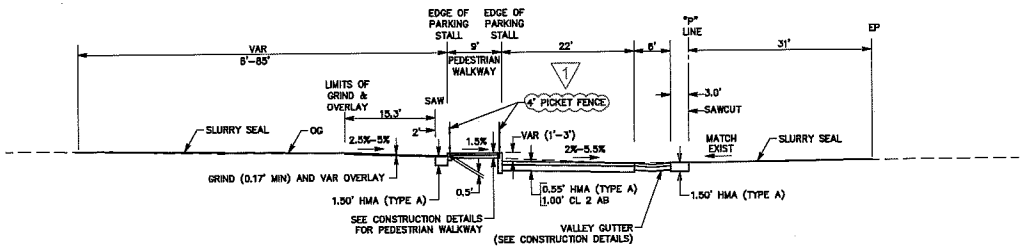

"P" 21+31.48 TO 23+34.40
SVS PARKING LOT

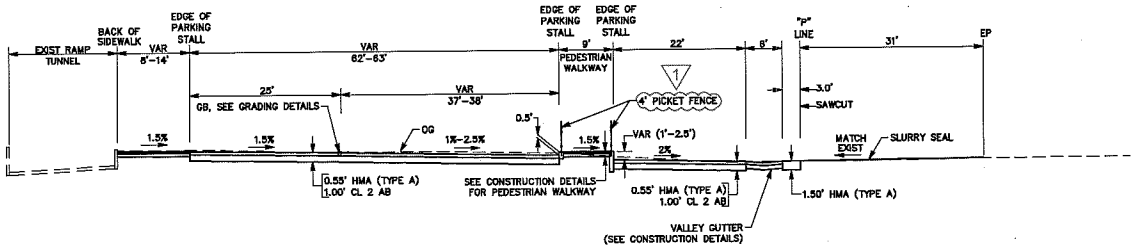

"P" 20+89.76 TO 21+54.18
SVS PARKING LOT

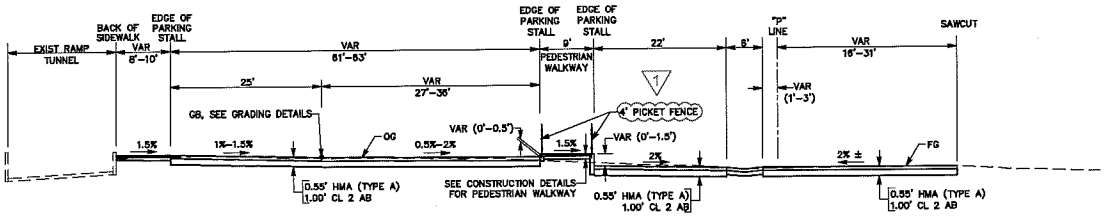

"P 20+44.14 TO 20+89.76
SVS PARKING LOT

REVISED PER ADDENDUM No. 1 DATED JANUARY 10, 2014 1

REVISIONS			
NO.	DESCRIPTION	DATE	BY

BENCH MARK ELEV. 29.38 Ft
DESCRIPTION BENCHMARK# 297-C3D
BRONZE MONUMENT STAMPED "USGS-147-H-RC-1930" SW CORNER OF POST OFFICE AT WEST ENTRANCE, 20 FEET NORTH OF SW CORNER OF BUILDING AND 4 FEET SOUTH OF THE WEST ENTRANCE IN THE TOP OF GRANITE SLAB AT TOP OF STEPS. NE CORNER 8TH AND I STREETS.

FIELD BOOK
SCALE
HORIZ. N.T.S
VERT. N.T.S

CITY OF SACRAMENTO
DEPARTMENT OF PUBLIC WORKS

DRAWN BY: J.T.W
DATE NOVEMBER, 2013
DESIGNED BY: T.LEWIS
R.C.E. 51905 DATE NOV. 2013
CHECKED BY: R.M. BROGAN
R.C.E. 63854 DATE NOV. 2013

MARK THOMAS & COMPANY, INC.
7300 FOLSOM BOULEVARD, SUITE 200
SACRAMENTO, CALIFORNIA 95826
UNDER THE SUPERVISION OF: R. MATTHEW BROGAN
R.C.E. 63854 exp. 9-30-14

IMPROVEMENT PLANS FOR
WEST TUNNEL RAMPS ACCESS PROJECT
TYPICAL SECTIONS

PN: T15029031

SHEET No. 4 of 34
SHEET C-4 — OF — 2

CAD FILE: V:\Sacramento - SA-13118-West Tunnel Ramps Access\CADD\Sheets\Roadway Sheets\
FILE NAME: extra_Typical Sections PLOT DATE: Jan 10, 2014-09:21:24am
PLOT DATE: Jan 10, 2014-09:21:24am

PLOT DATE: Jan 10, 2014-09:23:09am

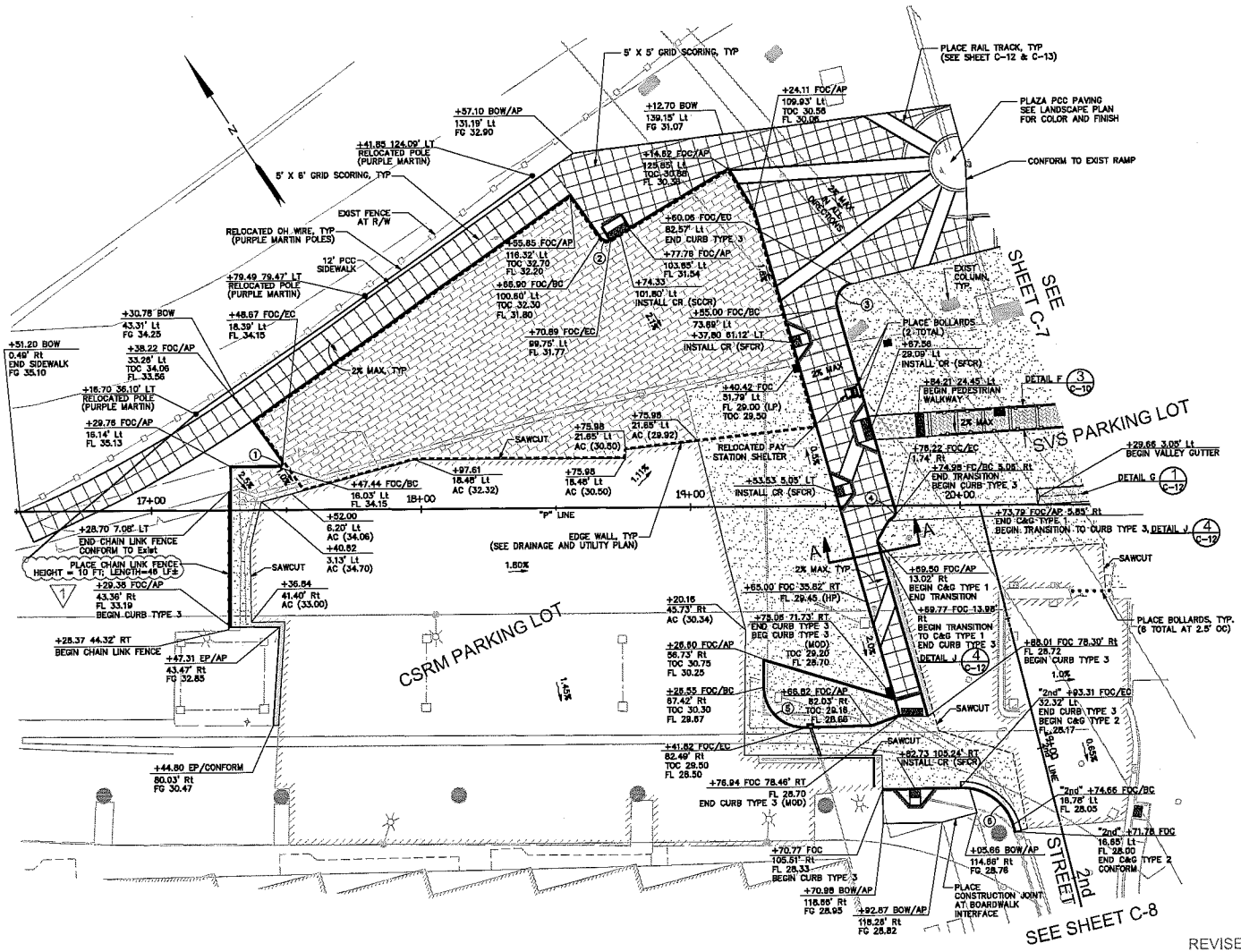

NOTES

1. ALL CALLOUTS REFERENCE THE "P" LINE UNLESS OTHERWISE NOTED.
2. ALL HANDICAPPED STALL AREAS SHALL NOT EXCEED 2% IN ANY DIRECTION.
3. SEE SHEET C-14 & C-15 FOR GRADING DETAILS AT SVS PARKING LOT.
4. SEE SHEET C-13 FOR LIMITS OF PICKET FENCE.

LEGEND

- PERMEABLE INTERLOCKING PAVERS (SEE DRAINAGE AND UTILITY PLAN)
- INSTALL NEW PAVEMENT SECTION [0.55' HMA (TYPE A)/1.00' CL 2 AB]
- INSTALL NEW CONCRETE SECTION [0.50' PCC/0.67' CL 2 AB & WWF]
- PLACE PCC PEDESTRIAN WALKWAY [0.33' PCC/0.50' CL 2 AB]
- GRIND (0.17' MAX) AND OVERLAY
- PLACE PCC PEDESTRIAN SIDEWALK [0.33' PCC/0.50' CL 2 AB]
- INSTALL FULL DEPTH PAVEMENT SECTION [1.50' HMA (TYPE A)]
- SAWCUT
- LIMITS OF SLURRY SEAL
- TRUNCATED DOME PAD
- PROPOSED SLOPE GRADE
- EXIST SLOPE GRADE
- (XX.XX) EXISTING PAVEMENT ELEVATION

CURVE DATA

	RADIUS	Δ	TANGENT	LENGTH
1	1.50	125°27'42"	2.91	3.28
2	3.00	85°44'08"	2.78	4.49
3	7.00	91°46'10"	7.22	11.21
4	3.00	79°08'25"	2.48	4.14
5	15.50	91°56'02"	16.04	24.88
6	20.00	74°42'00"	15.26	26.07

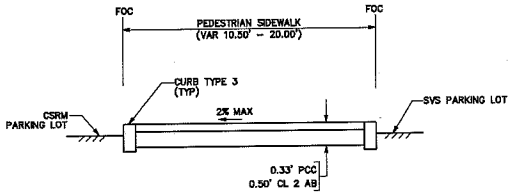

SECTION A-A

NO SCALE

REVISED PER ADDENDUM No. 1 DATED JANUARY 10, 2014

SHEET No. 6 OF 34

REVISIONS			
NO.	DESCRIPTION	DATE	BY

BENCH MARK ELEV. 28.38 Ft
DESCRIPTION BENCHMARK# 297-C30
BRONZE MONUMENT STAMPED "2005-147-J-29-1933" SW CORNER OF POST OFFICE AT WEST ENTRANCE, 20 FEET NORTH OF SW CORNER OF BUILDING AND 4 FEET SOUTH OF THE WEST ENTRANCE IN THE TOP OF GRANITE CAP AT TOP OF STEPS. NE CORNER 8TH AND I STREETS.

FIELD BOOK
SCALE HORIZ. 1"=20' VERT.

CITY OF SACRAMENTO
DEPARTMENT OF PUBLIC WORKS

DRAWN BY: J.T.J DATE NOVEMBER, 2013
DESIGNED BY: T.LEWIS R.C.E. 61905 DATE NOV. 2013
CHECKED BY: R.M. BROGAN R.C.E. 63854 DATE NOV. 2013

MARK THOMAS & COMPANY, INC.
7300 FOLSOM BOULEVARD, SUITE 203
SACRAMENTO, CALIFORNIA 95826
UNDER THE SUPERVISION OF: R. MATTHEW BROGAN R.C.E. 63854 exp. 9-30-14

IMPROVEMENT PLANS FOR
WEST TUNNEL RAMPS ACCESS PROJECT
LAYOUT PLANS

PN: T15029031
SHEET C-6 OF 3

CAD FILE: V:\Sacramento - SA-13116-West Tunnel Ramps Access\CADD\Sheets\Roadway Sheets\

NOTES

1. ALL CALLOUTS REFERENCE THE "P" LINE UNLESS OTHERWISE NOTED.
2. ALL HANDICAPPED STALL AREAS SHALL NOT EXCEED 2% IN ANY DIRECTION.
3. SEE SHEET C-14 & C-15 FOR GRADING DETAILS AT SVS PARKING LOT.
4. SEE SHEET C-13 FOR LIMITS OF PICKET FENCE.

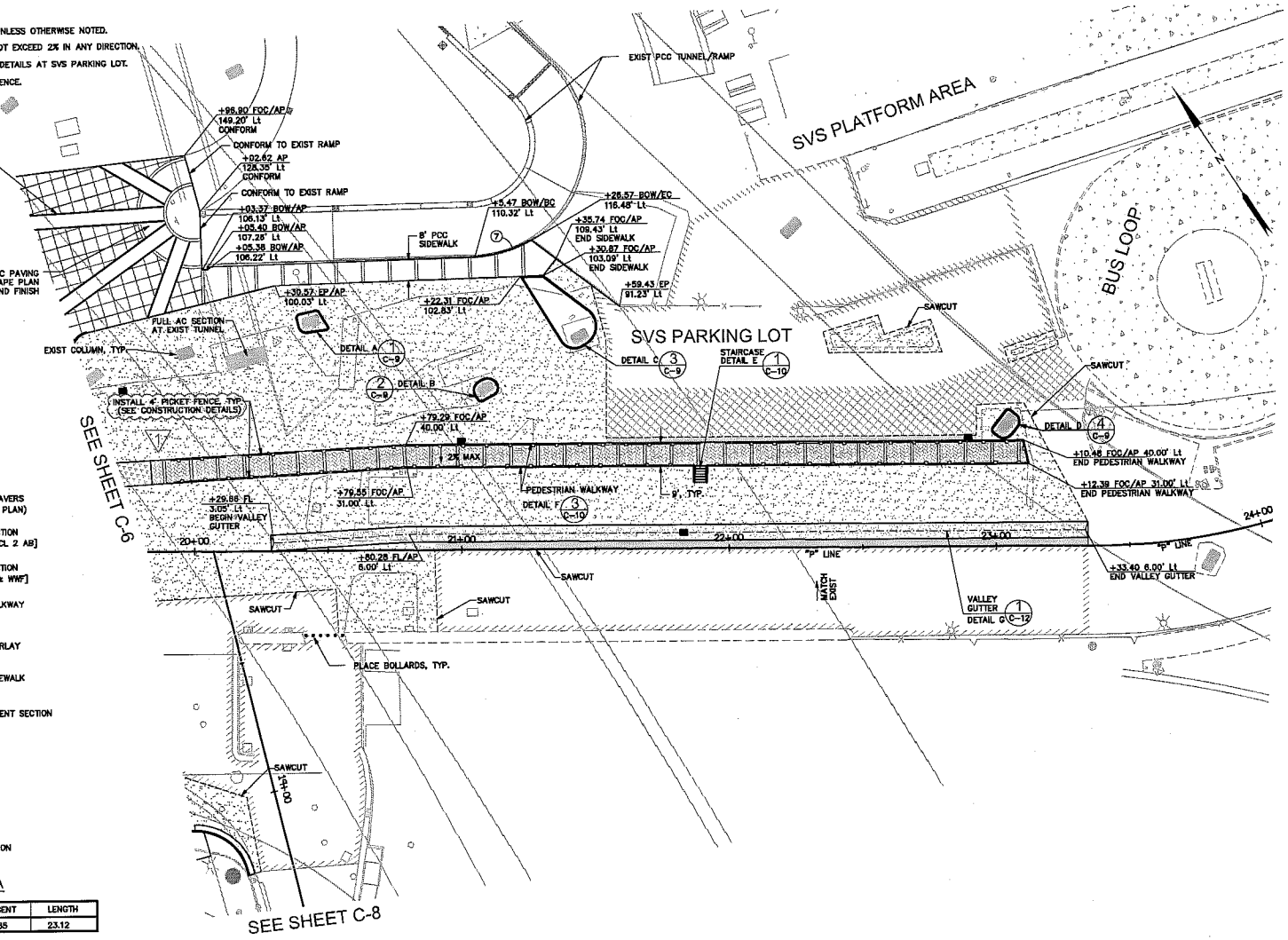

LEGEND

- PERMEABLE INTERLOCKING PAVERS (SEE DRAINAGE AND UTILITY PLAN)
- INSTALL NEW PAVEMENT SECTION [0.55' HMA (TYPE A)/1.00' CL 2 AB]
- INSTALL NEW CONCRETE SECTION [0.50' PCC/0.67' CL 2 AB & WWF]
- PLACE PCC PEDESTRIAN WALKWAY [0.33' PCC/0.50' CL 2 AB]
- GRIND (0.17' MAX) AND OVERLAY
- PLACE PCC PEDESTRIAN SIDEWALK [0.33' PCC/0.50' CL 2 AB]
- INSTALL FULL DEPTH PAVEMENT SECTION [1.50' HMA (TYPE A)]
- SAWCUT
- LIMITS OF SLURRY SEAL
- TRUNCATED DOME PAD
- PROPOSED SLOPE GRADE
- EXIST SLOPE GRADE
- (XX.XX) EXISTING PAVEMENT ELEVATION

CURVE DATA

○	RADIUS	△	TANGENT	LENGTH
7	43.00	30°49'26"	11.85	23.12

REVISED PER ADDENDUM No. 1 DATED JANUARY 10, 2014 1

SHEET No. 7 OF 34

REVISIONS			
NO.	DESCRIPTION	DATE	BY

BENCH MARK ELEV. 29.38 Ft
DESCRIPTION BENCHMARK# 297-C3D
BRONZE MONUMENT STAMPED "USGS-19"-CL 2B-1934" IN CORNER OF POST OFFICE AT WEST ENTRANCE, 29 FEET NORTH OF SW CORNER OF BUILDING AND 4 FEET SOUTH OF THE WEST ENTRANCE IN THE TOP OF GRANITE SLAB AT TOP OF STEPS. NE CORNER 8TH AND I STREETS.

FIELD BOOK
SCALE HORIZ. 1"=20' VERT.

CITY OF SACRAMENTO
DEPARTMENT OF PUBLIC WORKS

DRAWN BY: J.TJ DATE NOVEMBER, 2013
DESIGNED BY: T.LEWIS R.C.E. 61905 DATE NOV. 2013
CHECKED BY: R.M. BROGAN R.C.E. 63854 DATE NOV. 2013

MARK THOMAS & COMPANY, INC.
7000 FOLSOM BOULEVARD, SUITE 203
SACRAMENTO, CALIFORNIA 95826
UNDER THE SUPERVISION OF: R. MATTHEW BROGAN R.C.E. 63854 exp. 9-30-14

IMPROVEMENT PLANS FOR
WEST TUNNEL RAMPS ACCESS PROJECT
LAYOUT PLANS

PN: T15029031

SHEET C-7 OF 3

CAD FILE: V:\Sacramento - SA-13116-West Tunnel Ramps Access\CADD\Sheets\Roadway Sheets\

PLOT DATE: Jan 10, 2014-09:22:35am

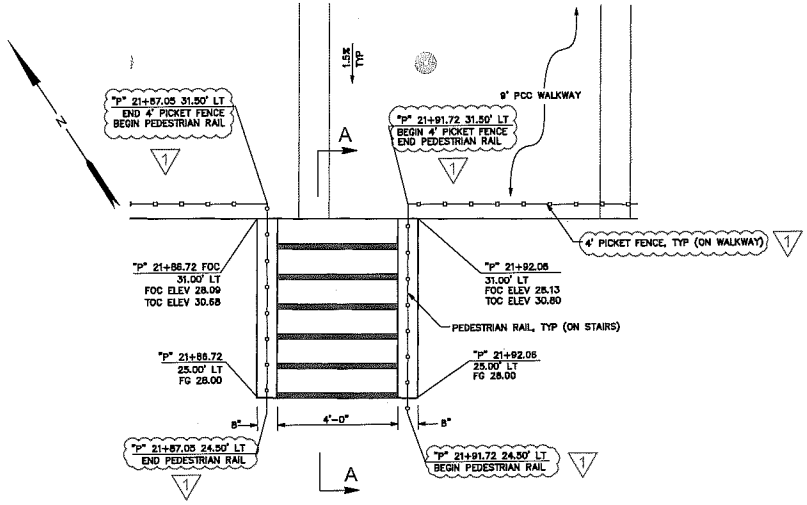

DETAIL E - STAIRWAY PLAN (1/-)
SCALE: 1"=2'

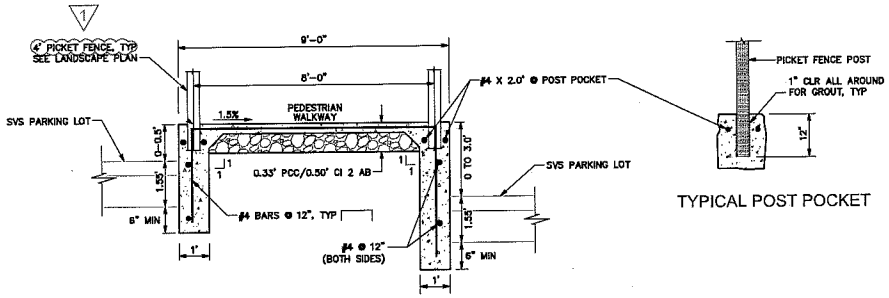

TYPICAL POST POCKET

DETAIL F - PEDESTRIAN WALKWAY TYPICAL SECTION (3/-)
NO SCALE

NOTE: CONTRACTOR SHALL VERIFY THAT ADA COMPLIANCE IS MET WITH ALL OF THE STAIR AND PEDESTRIAN RAIL ITEMS.

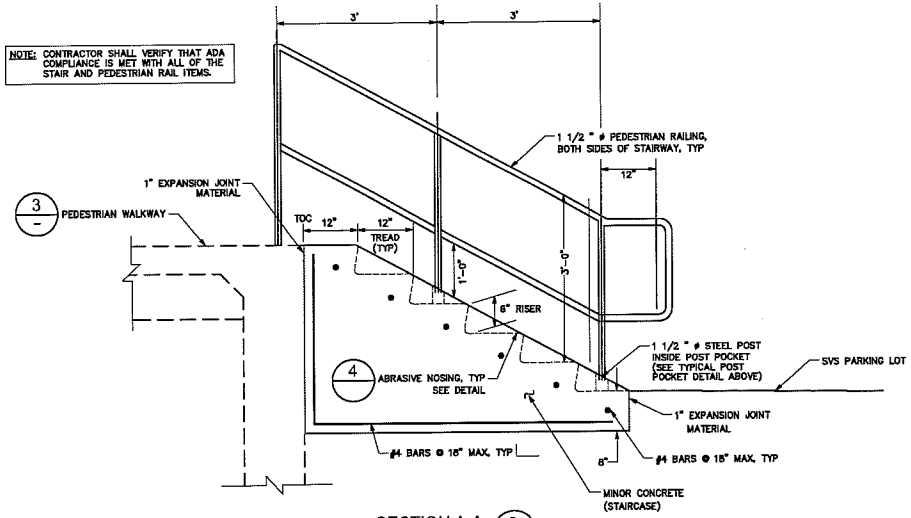

SECTION A-A (2/-)
NO SCALE

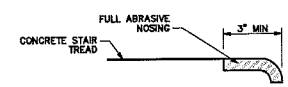

ABRASIVE NOSING (4/-)
NO SCALE

REVISED PER ADDENDUM No. 1 DATED JANUARY 10, 2014 (1)

SHEET No. 10 OF 34

REVISIONS			
NO.	DESCRIPTION	DATE	BY

BENCH MARK ELEV. 29.38 Ft
DESCRIPTION BENCHMARK# 297-C3D
BRONZE MONUMENT STAMPED "USGS-147-M-29-1934" SW CORNER OF POST OFFICE AT WEST ENTRANCE, 29 FEET NORTH OF SW CORNER OF BUILDING AND 4 FEET SOUTH OF THE WEST ENTRANCE IN THE TOP OF GRANITE SLAB AT TOP OF STEPS. NE CORNER 8TH AND I STREETS.

FIELD BOOK
SCALE
HORIZ. N/A
VERT.

CITY OF SACRAMENTO
DEPARTMENT OF PUBLIC WORKS

DRAWN BY: J.TJI
DATE NOVEMBER, 2013
DESIGNED BY: T.LEWIS
R.C.E. 61905 DATE NOV. 2013
CHECKED BY: R.M. BROGAN
R.C.E. 63854 DATE NOV. 2013

MARK THOMAS & COMPANY, INC.
7300 FOLSOM BOULEVARD, SUITE 203
SACRAMENTO, CALIFORNIA 95828
UNDER THE SUPERVISION OF: R. MATTHEW BROGAN
63854 9-30-14
R.C.E. exp.

IMPROVEMENT PLANS FOR
WEST TUNNEL RAMPS ACCESS PROJECT
CONSTRUCTION DETAILS

PN: T15029031

SHEET C-10 OF 5

PLOT DATE: Jan 10, 2014--09:29:57am
CAD FILE: V:\Sacramento - SA-13116-West Tunnel Ramps Access\CADD\Sheets\Roadway Sheets\

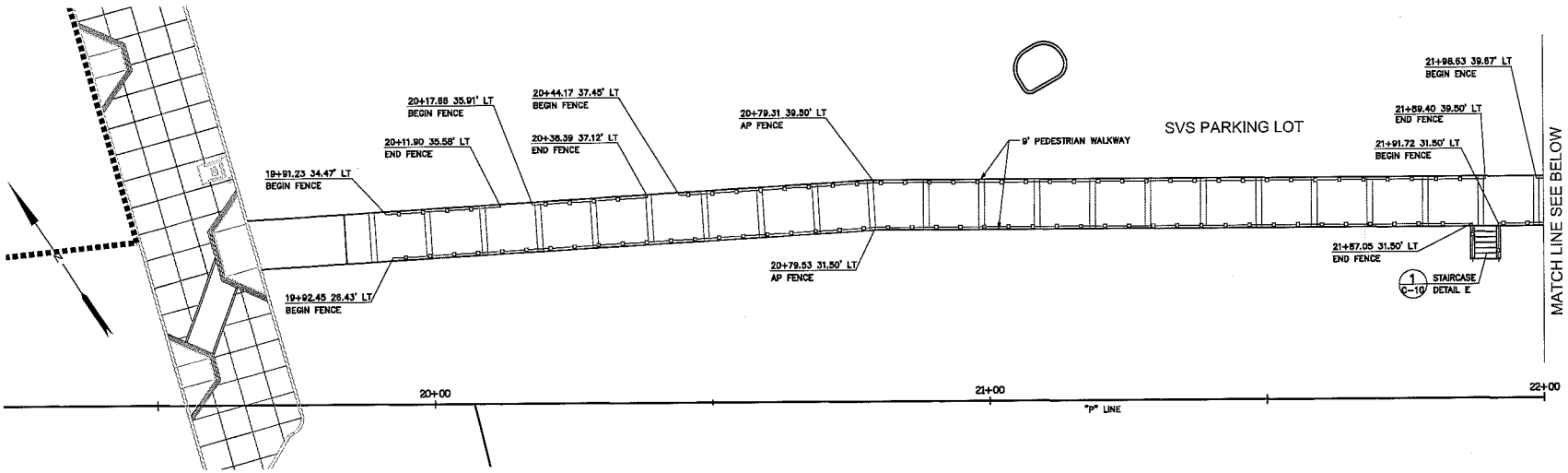

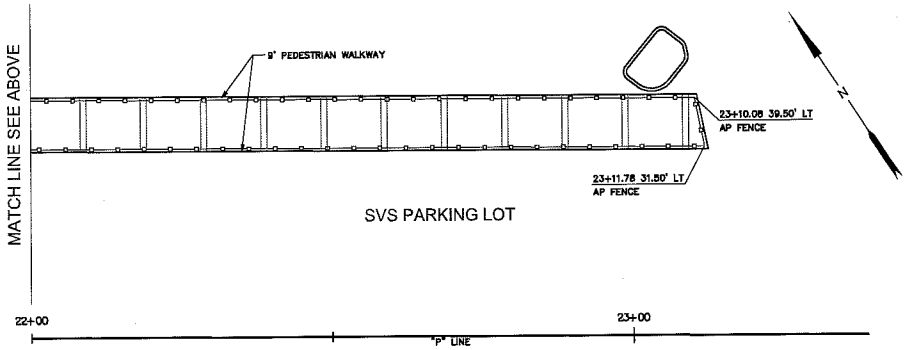

4' PICKET FENCE LIMITS 1

REVISED PER ADDENDUM No. 1 DATED JANUARY 10, 2014 1

SHEET No. 13 OF 34

REVISIONS			
NO.	DESCRIPTION	DATE	BY

BENCH MARK ELEV. 29.38 Ft
DESCRIPTION BENCHMARK# 297-C3D
BRONZE MONUMENT STAMPED "19506-167-H-26-1933" ON CORNER OF POST OFFICE AT WEST ENTRANCE, 20 FEET NORTH OF SW CORNER OF BUILDING AND 4 FEET SOUTH OF THE WEST ENTRANCE IN THE TOP OF GRANITE SLAB AT TOP OF STEPS. NE CORNER 8TH AND I STREETS.

FIELD BOOK
SCALE
HORIZ. 1"=10'
VERT.

CITY OF SACRAMENTO
DEPARTMENT OF PUBLIC WORKS

DRAWN BY: J.T.B. DATE NOVEMBER, 2013
DESIGNED BY: T.LEWIS R.C.E. 61905 DATE NOV. 2013
CHECKED BY: R.M. BROGAN R.C.E. 63854 DATE NOV. 2013

MARK THOMAS & COMPANY, INC.
7300 FOLSOM BOULEVARD, SUITE 203
SACRAMENTO, CALIFORNIA 95826
UNDER THE SUPERVISION OF: R. MATTHEW BROGAN
R.C.E. 63854 EXP. 9-30-14

IMPROVEMENT PLANS FOR
WEST TUNNEL RAMPS ACCESS PROJECT
CONSTRUCTION DETAILS

PN: T15029031

SHEET C-13 — OF — 5

CAD FILE: V:\Sacramento - SA-13116-West Tunnel Ramps Access\CADD\Sheets\Roadway Sheets\

PLOT DATE: Jan 10, 2014-09:28:55am

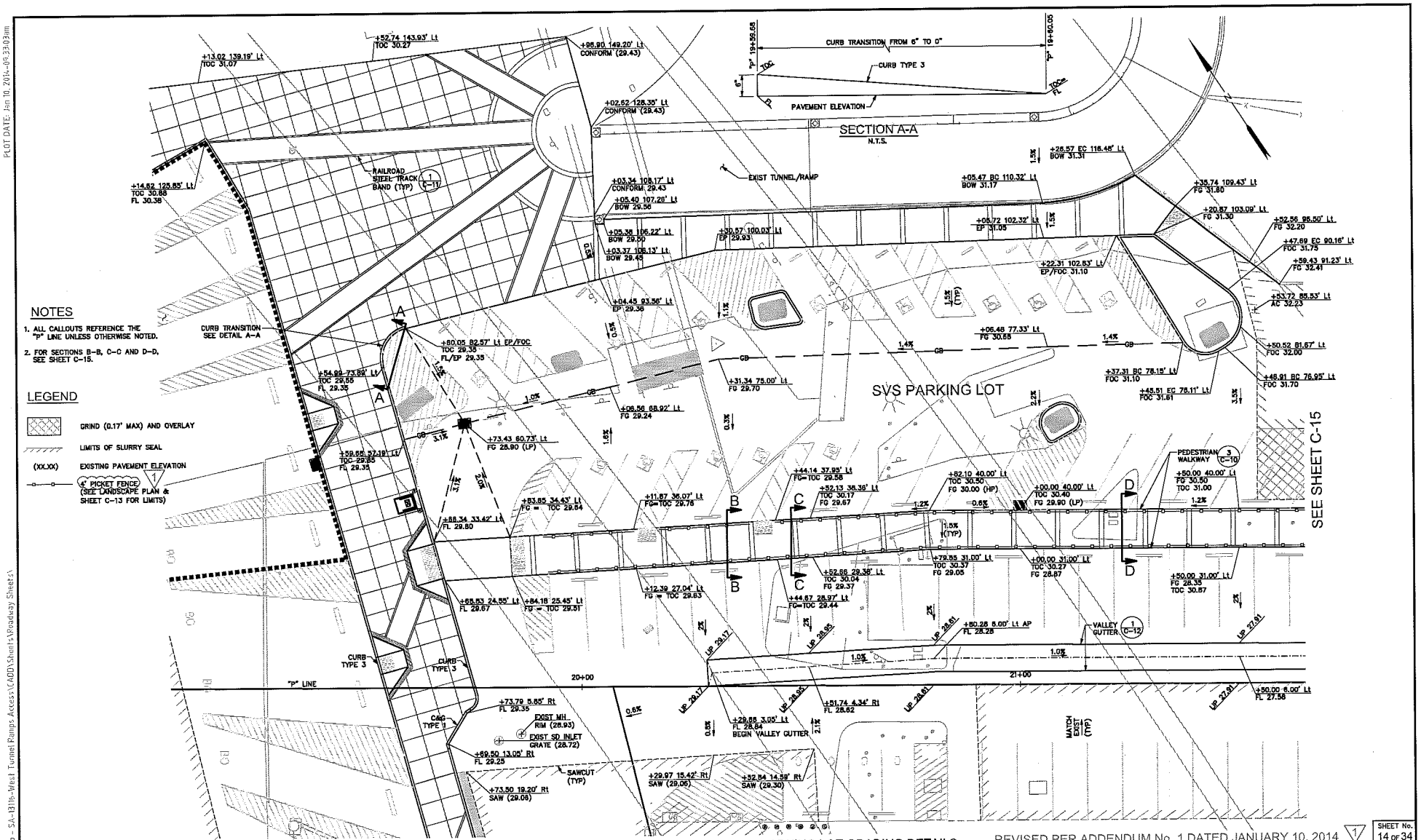

NOTES

1. ALL CALLOUTS REFERENCE THE "P" LINE UNLESS OTHERWISE NOTED.
2. FOR SECTIONS B-B, C-C AND D-D, SEE SHEET C-15.

LEGEND

- GRIND (0.17' MAX) AND OVERLAY
- LIMITS OF SLURRY SEAL
- (XX.XX) EXISTING PAVEMENT ELEVATION
- 4' PICKET FENCE (SEE LANDSCAPE PLAN & SHEET C-13 FOR LIMITS)

SVS PARKING LOT GRADING DETAILS

REVISED PER ADDENDUM No. 1 DATED JANUARY 10, 2014

SHEET No. 14 OF 34

REVISIONS			
NO.	DESCRIPTION	DATE	BY

BENCH MARK ELEV. 29.38 Ft
DESCRIPTION BENCHMARK# 297-C3D
BRONZE MONUMENT STAMPED "USGS-147-M-29-1933" SW CORNER OF POST OFFICE AT WEST ENTRANCE, 29 FEET NORTH OF SW CORNER OF BUILDING AND 4 FEET SOUTH OF THE WEST ENTRANCE IN THE TOP OF GRANITE SLAB AT TOP OF STEPS. NE CORNER 8TH AND I STREETS.

FIELD BOOK

SCALE HORIZ. 1"=10' VERT.

CITY OF SACRAMENTO
DEPARTMENT OF PUBLIC WORKS

DRAWN BY: J.T.H. DATE NOVEMBER, 2013
DESIGNED BY: T.LEWIS R.C.E. 61905 DATE NOV. 2013
CHECKED BY: R.M. BROGAN R.C.E. 63854 DATE NOV. 2013

MARK THOMAS & COMPANY, INC.
7300 FOLSOM BOULEVARD, SUITE 203
SACRAMENTO, CALIFORNIA 95826
UNDER THE SUPERVISION OF: R. MATTHEW BROGAN
63854 R.C.E. 9-30-14 exp.

IMPROVEMENT PLANS FOR
WEST TUNNEL RAMPS ACCESS PROJECT
GRADING DETAILS

PN: T15029031

SHEET C-14 OF 2

PLOT DATE: Jan 10, 2014-09:33:03am

CAD FILE: V:\Sacramento - SA-13116-West Tunnel Ramps Access\CADD\Sheets\Roadway Sheets\

PLOT DATE: Jan 10, 2014--09:32:20am

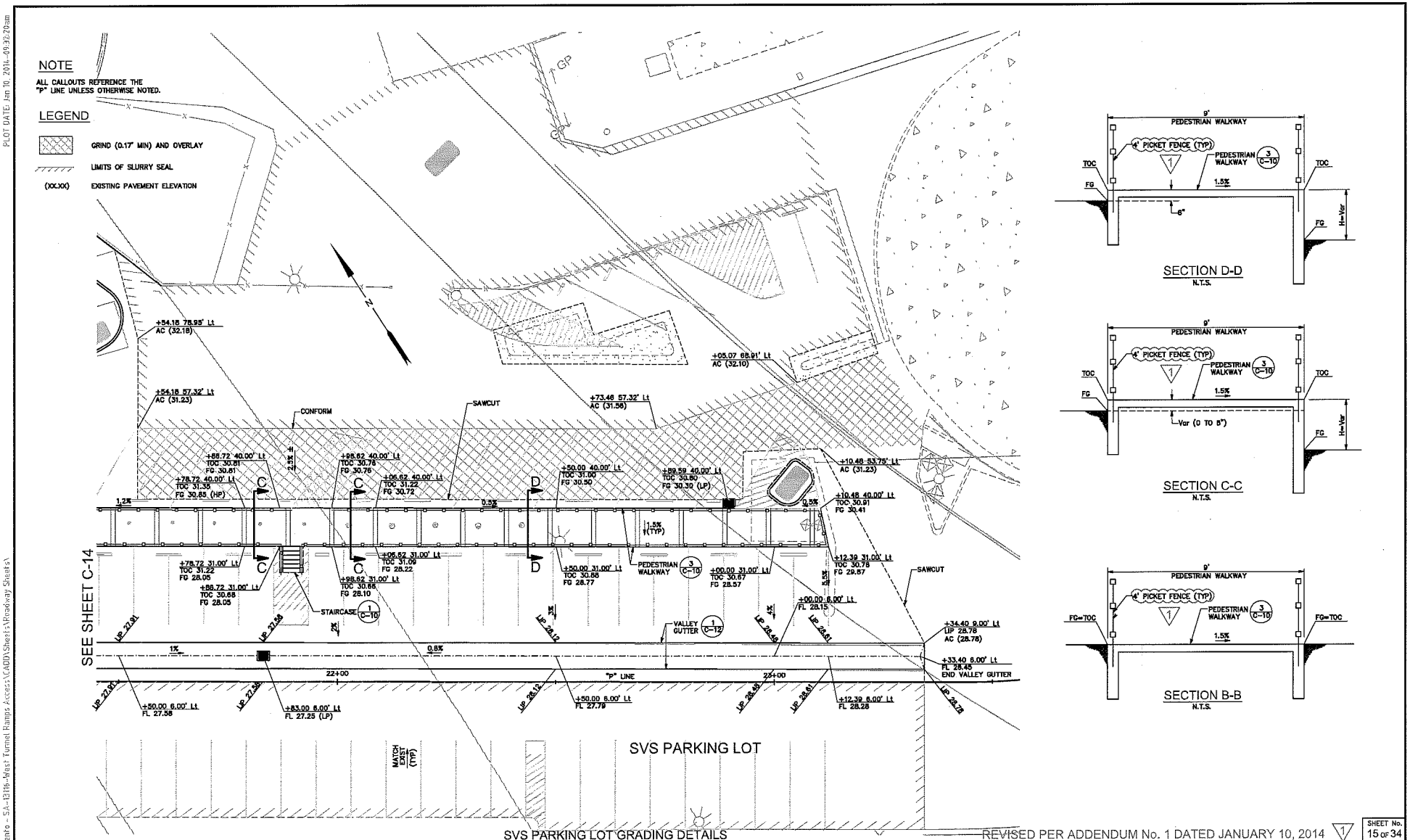

REVISED PER ADDENDUM No. 1 DATED JANUARY 10, 2014

REVISIONS			
NO.	DESCRIPTION	DATE	BY

BENCH MARK ELEV. 29.38 Ft
DESCRIPTION BENCHMARK# 297-C3D
BRONZE MONUMENT STAMPED "USGS-147-M-29-1933" SW CORNER OF POST OFFICE AT WEST ENTRANCE, 29 FEET NORTH OF SW CORNER OF BUILDING AND 4 FEET SOUTH OF THE WEST ENTRANCE IN THE TOP OF GRANITE SLAB AT TOP OF STEPS. NE CORNER 8TH AND I STREETS.

FIELD BOOK
SCALE
HORIZ. 1"=10'
VERT.

CITY OF SACRAMENTO
DEPARTMENT OF PUBLIC WORKS

DRAWN BY: J.TJI DATE NOVEMBER, 2013
DESIGNED BY: T.LEWIS R.C.E. 61905 DATE NOV. 2013
CHECKED BY: R.M. BROGAN R.C.E. 63854 DATE NOV. 2013

MARK THOMAS & COMPANY, INC.
7300 FOLSOM BOULEVARD, SUITE 203
SACRAMENTO, CALIFORNIA 95826
UNDER THE SUPERVISION OF: R. MATTHEW BROGAN
R.C.E. 63854 9-30-14 exp.

IMPROVEMENT PLANS FOR
WEST TUNNEL RAMPS ACCESS PROJECT
GRADING DETAILS

PN: T15029031

SHEET No. 15 OF 34
SHEET C-15 OF 2

CAD FILE: V:\Sacramento - SA-13116-West Tunnel Ramps Access\CADD\Sheets\Roadway Sheets\

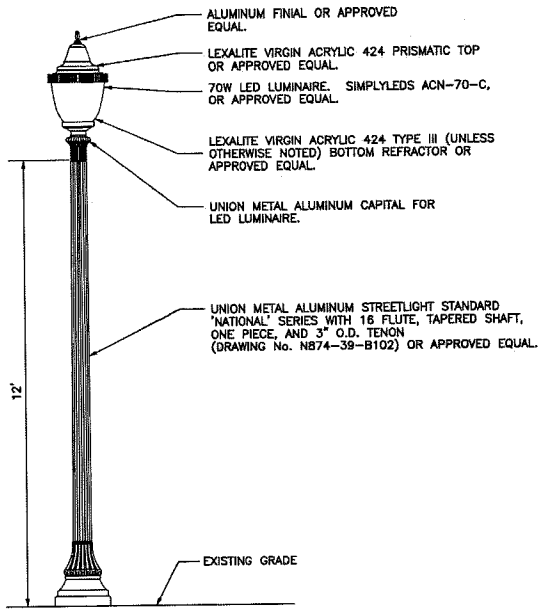

STYLE 1
NO SCALE

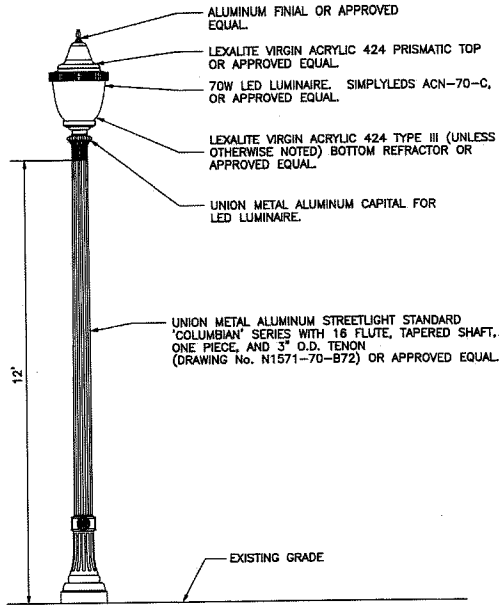

STYLE 2
NO SCALE

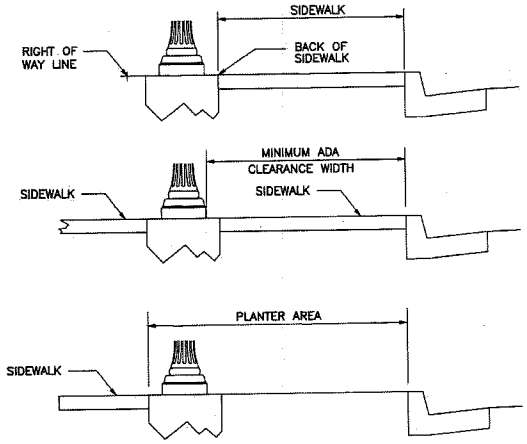

STREETLIGHT LOCATIONS
NO SCALE

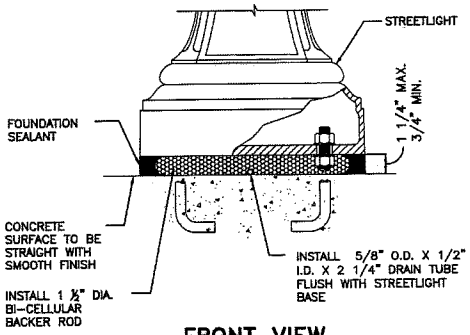

FRONT VIEW
NO SCALE

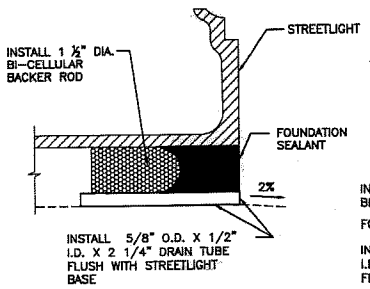

SIDE VIEW
NO SCALE

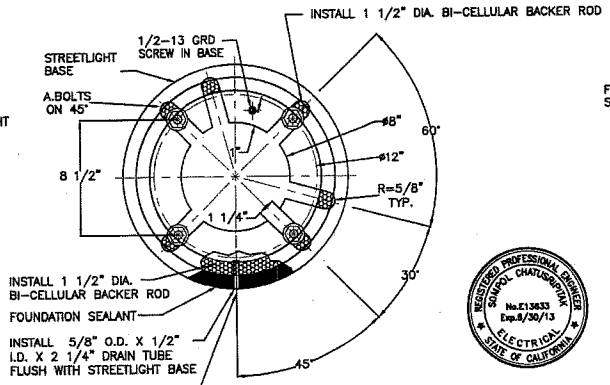

TOP VIEW
NO SCALE

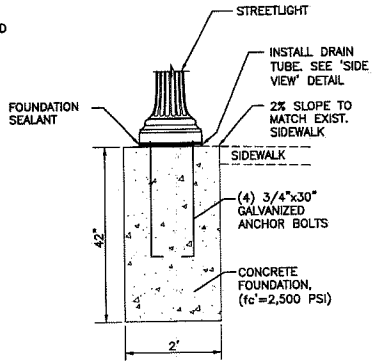

FOUNDATION AND SEALANT DETAIL
NO SCALE

REVISIONS NO.	DESCRIPTION	DATE	BY

BENCH MARK ELEV. _____
DESCRIPTION

FIELD BOOK
SCALE

CITY OF SACRAMENTO
DEPARTMENT OF PUBLIC WORKS

DRAWN BY: STAFF
DATE 10/19/2012
DESIGN BY: STAFF
R.C.E. _____ DATE _____
CHECKED BY: STAFF
R.C.E. _____ DATE _____

ELECTRICAL
STANDARD DETAILS FOR ORNAMENTAL STREETLIGHTS

APPROVED BY : SOMKOL CHATURIPITAK, SENIOR ELECTRICAL ENGINEER
P.E. E-13633 DATE : 10/19/12

SHEET E- OF

DEPARTMENT OF
TRANSPORTATION

ENGINEERING SERVICES DIVISION

CITY OF SACRAMENTO
CALIFORNIA

915 I STREET, ROOM 2000
SACRAMENTO, CA
95814-2700

PH. (916) 808-8300
FAX (916) 808-8281

West Tunnel Ramps Access (T15029031)

Addendum No. 3

January 15, 2014

To all Potential Bidders:

Attached hereto are addenda items, which shall be incorporated into the bid proposal for above noted project. These changes shall be considered as part of the original documents, as if they were originally provided therein, and as such shall be used as contractual documents. All other terms, conditions, and specifications of the bid remain unchanged. Bidders must acknowledge receipt of this addendum prior to the hour and date specified in the bid request, or as amended, by one of the following methods:

(a) By acknowledging receipt, on the bid proposal form submitted; or
(b) By separate letter or telegram which includes a reference to the bid request and addendum number.

Failure to acknowledge receipt of this addendum in one of the above methods and cause acknowledgment to be received prior to the hour and date specified for receipt of proposals, **may result in rejection of your offer.** If by virtue of this addendum you decide to change an offer already submitted, such change may be made by telegram or letter, provided such telegram or letter makes reference to the bid request number and this addendum, and is received prior to the opening hour and date specified.

For any questions related to this Addendum, contact the Project Manager, Marc Lee at (916) 808-7481 or Mlee@cityofsacramento.org.

Very truly yours,

Jose R. Ledesma
Contract Services

West Tunnel Ramps Access (T15029031)
Addendum No. 3

Item #1 The attached Soil Management Plan shall be followed throughout the construction of this project.

Item #2 The first paragraph of section 5.6 "Removal of Asbestos and Hazardous Substances" has the following edit:

When the presence of asbestos or hazardous substances are not shown on the plans, ~~or~~ indicated in the specifications ***or discussed in the soil and groundwater management plan*** and the Contractor encounters materials which the Contractor reasonably believes to be asbestos or a hazardous substance as defined in Section 25914.1 of the Health and Safety Code, and the asbestos or hazardous substance has not been rendered harmless, the Contractor may continue work in unaffected areas reasonably believed to be safe. The Contractor shall immediately cease work in the affected area and report the condition to the Engineer in writing.

Item #3 The first paragraph of section 9.11 "Handling and Removal of Hazardous or Contaminated Materials" has the following edit:

In the event hazardous or contaminated materials are encountered at the site for which separate handling or removal provisions have not been made in these Special Provisions ***or in the soil and groundwater management plan***, the Contractor shall stop work on that item, contact the Engineer and schedule his operations to work elsewhere on the site if possible. The City will be responsible for handling and removal of hazardous material or may request that the Contractor shall be available, through contract change order, to provide additional services as needed for the completion of the work. Additional services may consist of retaining a subcontractor who possesses a California license for hazardous substance removal and remedial actions.

Item #4 Bid item 23 "Roadway Excavation and Grading" has the following edits to the second paragraph:

Excavation shall include sawcutting and removal of ***AC,*** all aggregate base (AB), native material, railroad ballast, and soil to allow construction of improvements to the lines and grades shown on the Plans. ***Care shall be taken to not comingle AC with other excavated material, in accordance with the soil and groundwater management plan.*** This item shall include

grading behind the proposed sidewalk necessary to match the existing grades and improvements.

Item #5 Correct Bid item 50 "Cold Plane Asphalt Concrete (0.17" Max)"

Bid item is corrected from 0.17" to 0.17'. The attached bid proposal has been updated to reflect the change.

Item #6 Contractor shall take extra care not to damage column or any exposed footing during excavation activities; no excavation shall be allowed below the top of the existing footing without permission of the engineer. All new PCC and AC poured/placed against the existing columns shall have a minimum ½" expansion board wrapped on the column prior to material placement.

West Tunnel Ramps Access Project
Soil & Groundwater Management Plan

The Downtown Sacramento Railyards
Sacramento, California

January 2014

Table of Contents

Contents

1.0 PROJECT INTRODUCTION 4

1.1 PLAN PURPOSE 4

1.2 PROJECT CONSTRUCTION AREA 4

1.3 REGULATORY FRAMEWORK AND BACKGROUND 4

1.4 PARTIES IMPLEMENTING THIS PLAN 6

1.5 PLAN IMPLEMENTATION AND AMENDMENTS 6

2.0 PLAN ENVIRONMENTAL CONTEXT 7

2.1 PROJECT REMEDIAL GOALS 7

2.2 CONSTITUENTS OF CONCERN 8

3.0 SOILS AND GROUNDWATER HANDLING 9

3.1 RATIONALE FOR SOIL MANAGEMENT 9

3.2 SITE SOILS AND AREA USE CLASSIFICATION 10

3.3 CONTRACTOR'S EXCAVATION AND HANDLING APPROACH 11

3.4 PROJECT-SPECIFIC GENERAL HANDLING CONDITIONS 11

4.0 SOIL MANAGEMENT PROTOCOL 13

4.1 HOLDING AREAS 13

4.2 SOIL STOCKPILE TYPES 14

4.3 STOCKPILE PROFILING 15

4.4 STOCKPILE MANAGEMENT 15

4.5 STOCKPILE LOCATIONS 16

4.6 STOCKPILE TRACKING & RECORDKEEPING 16

4.6.1 Stockpile Tracking 17

4.7 STOCKPILE DISPOSITION DECISION MAKING 17

4.8 CONTROL OF STORM WATER, EROSION, DUST, AND VOLATILE CHEMICAL EMISSIONS FROM STOCKPILES 18

5.0 SAMPLING AND ANALYSIS 19

6.0 CONCRETE AND ASPHALT PROCESSING 20

7.0 WELLS AND ASSOCIATED REMEDIATION SYSTEMS 22

7.1 ENCOUNTER OF PREVIOUSLY ABANDONED MONITORING WELLS 22

8.0 DEWATERING MANAGEMENT PLAN 23

9.0 HEALTH AND SAFETY GUIDANCE 24

9.1 HAZARDOUS CHEMICALS DETECTED ON SITE 24

9.2 KNOWN AND SUSPECTED HAZARDS 24

TABLE 1: CURRENT RAILYARDS REMEDIAL GOALS FOR EACH MAJOR STUDY AREA 25

FIGURE 1: PROJECT MAP 29

FIGURE 2: MAJOR REMEDIATION STUDY AREAS 30

1.0 Project Introduction

1.1 Plan Purpose

This "*West Tunnel Ramps Access Project, Soil and Ground Water Management Plan*" (the "Plan") has been prepared for use in the construction of the West Tunnel Ramps Access, located at the southwestern portion of the Sacramento Station Soils Study Area (Figure 1, the "Project"), within the Downtown Sacramento Railyards (the "Railyards"), in compliance with regulatory requirements.

The Plan's purpose is to describe management, handling, and precautionary procedures associated with encountered material, soil and groundwater with the potential to require special handling requirements.

This Plan is based on practices and procedures established during remediation within the Railyards. The Plan's regulatory framework includes remediation documents of records for the Railyards that were reviewed and approved by the Department of Toxic Substances Control (the "DTSC"), as well as discussion with regulatory agencies. This Plan may be modified or amended in writing as conditions warrant. All material modifications or amendments will be submitted to DTSC for approval. DTSC will be notified of non-material modifications or amendments.

1.2 Project Construction Area

As depicted in Figure 1, this Plan applies to the activities associated with the construction of the West Tunnel Ramps Access Project, as described below:

West Tunnel Ramps Access Project will improve the sidewalks at the intersection of 2nd Street at I Street and improve the Sacramento Valley Station (SVS) and California State Railroad Museum (CSRM) parking lots in the southwestern area of the Railyards. The work will be limited to shallow soils and will not encroach on groundwater. Such work will include constructing new curbs, gutters and sidewalks, and new pavement section, pavement replacement, signing and striping, landscaping, and parking lot lighting improvements. Earthwork will include minor excavations and trenching to support the construction of 174 linear feet of 12-inch storm drain, and trenching for 2-inch lighting conduit. Similar shallow trenches for various minor features may be needed. The contractor will saw-cut all asphalt and concrete for demolition. Old paving material will be removed, with the intent of re-use where possible. The contractor will have the discretion to reuse material, where it meets regulatory re-use requirements or dispose of it off-site per applicable disposal regulations.

1.3 Regulatory Framework and Background

The DTSC has been formally designated as the lead regulatory agency for the Railyards, where the subject Project is located. As the lead agency, the DTSC oversees all Projects-related work that relates to protection of human health and the environment, and coordinates with other regulatory agencies as needed.

Projects within the Railyards will span previously defined soil and groundwater remediation study areas ("Study Areas") that are subject to DTSC's 1988 Enforceable Agreement with

Southern Pacific, the predecessor of Union Pacific Rail Road ("UPRR" or the "Responsible Party"), and are currently undergoing remediation by UPRR.

These Study Areas include: The Sacramento Station (where the subject Project is located); the Central Shops and South Plume; the Central Corridor; the Northern Shops; the Lagoon Study Area; the Lagoon Groundwater Study Area; Car Shop Nine; the Northwest Corner; and the Manufactured Gas Plant ("MGP") (Figure 2).

The Sacramento Station (Shallow Soil) Study Area, where the subject Project is located, was certified by the DTSC in 1994. Remedial Goals ("RGs") for shallow soil within certain Study Areas, including the Sacramento Station, have been established. These Remedial Goals (Table 1) were established to be the more protective value of either construction workers or groundwater.

The underlying assumption for this Plan for soil handling purposes is that shallow soils (soil within the vadose zone, above the groundwater table) have been subject to the DTSC-approved remedy and previously-known contamination has been remediated to meet the established construction worker cleanup goals. Soils within the Project boundary are assumed to not exceed Remedial Goals for the study area from which they are excavated unless shown otherwise, as outlined in subsequent sections of this Plan.

This Plan describes the management activities for all excavated shallow soil, consistent with DTSC directives for on-site management and testing before appropriate final soil disposition is determined. In addition, this Plan describes testing, management, treatment, and disposition activities that will be implemented in the event that potentially impacted shallow soils above Remedial Goals are encountered.

During the course of construction, materials, including soil, debris, concrete and asphalt, underground storage tanks and vaults, pipes and conduits, may be encountered, excavated, handled and disposed-of, depending on their respective concentrations relative to Sacramento Station Remedial Goals established under the 1988 Enforceable Agreement. When such remediation work is required, the City will inform the DTSC and the Responsible Party. The City may wait for the Responsible Party to complete the work, if and when possible, or may choose to manage the work under this Plan in order to maintain the construction schedule and mitigate delays and impacts. If remedial action must be taken to avoid construction delays, then impacted soil will be stockpiled in a designated area for treatment or offsite disposal. The excavation and stockpiling of impacted soil constitute a voluntary response action under the 1988 Enforceable Agreement that is consistent with the NCP.

This Plan applies the 1989 Remedial Goals for the Sacramento Station study area, which DTSC previously determined are protective of the Project area, project construction workers and for the intended use of the Project's right-of-way and overall construction areas.

Existing approvals and standard operating procedures developed for restricted areas are described. The DTSC will be informed and consulted when work in these areas occurs.

As a general rule, all soils, material and waste excavated or handled are in a temporary status, subject to their respective handling and characterization requirements, until final disposition has

been determined and secured in accordance with their respective applicable requirements, approvals and agreements. Accordingly, all stockpiles of any kind are considered temporary until such stockpiles are characterized and placed in their final location following appropriate handling, profiling and/or treatment.

1.4 Parties Implementing this Plan

The following constitute the general parties that are anticipated to implement this Plan:

- Project Manager: The City is responsible for managing work conducted under this Plan. As Project Manager, the City will implement this plan, file the storm water Notice of Intent and oversee the implementation of the Project's SWPPP.
- Responsible Party: UPRR is responsible for the remediation of the Railyards under the 1988 Enforceable Agreement, and will be notified of regulated discoveries and RG-exceeding soil.
- Regulatory Oversight: The DTSC is the lead regulatory agency overseeing all aspects of Plan's implementation.
- Environmental Oversight (Stantec Consulting): The Environmental Oversight Project Manager (EOPM), under contract with Vali Cooper and Associates, Inc., the Construction Manager, will assist in overseeing activities related to the implementation of this Plan.
- Construction Manager (Vali Cooper and Associates, Inc.): Working under contract under the City, the Construction Manager (CM) will assist in the City's implementation of the Plan and ensure Contractor compliance. The CM will engage the EOPM to oversee the City's activities related to its implementation of this Plan.
- General Contractor (to be selected): The Projects' general contractor will implement this Plan under the oversight of the CM and the EOPM.
- Property Owner: City is the owner of the property where the Project will be constructed.

1.5 Plan Implementation and Amendments

This Plan has been prepared in compliance with Railyards regulatory approvals, and regulatory standards and directives for various portions of the Railyards.

The City has agreed to implement this Plan, and will do so in accordance with all applicable approvals and relevant laws and regulations. To ensure compliance with said regulations, this Plan is being submitted to DTSC for review and approval. Should the need for future amendments arise, such amendments would be submitted to DTSC for review and approval.

2.0 Plan Environmental Context

This is a specific plan for the West Tunnel Ramps Access construction activities within the Railyards, and is based on the existing regulatory approvals that have been developed and approved by the DTSC.

This Plan identifies the DTSC approved Remedial Goals for the various construction areas in Table 1, based on the current status of regulatory approvals, subject to DTSC future periodic reviews and approvals.

As previously indicated, this Plan identifies a select range of activities to address various construction tasks that may be encountered during the Project. These tasks include, but are not limited to, soil excavation and stockpiles, soil transportation, health and safety, potential asbestos handling and mitigation (if any), debris handling, well abandonment (if any), and general site requirements, among others.

2.1 Project Remedial Goals

The DTSC approved Remedial Goals for the protection of Railyards construction workers are presented in Table 1.

Construction workers performing soil disturbing activities in areas that have been subject to remedial work do not require special training for handling site soils. However, construction workers with the potential to contact contaminated soil or groundwater must be OSHA 40-Hour HAZWOPER trained. All managers are required to have OSHA 40-Hour HAZWOPER training. The primary driver for this additional requirement is to be able to perform controlled operations in impacted areas while minimizing budget and schedule impacts should conditions exceeding Remedial Goals be encountered.

Furthermore, the Project must proceed in accordance with the mitigation measures set forth in the relevant California Environmental Quality Act (CEQA) documents completed for the Railyards and/or specific additional project-related environmental approvals.

The Project is required to implement applicable regulations regulating storm water control and project drainage under the City's National Pollutant Discharge Elimination System (NPDES) permit that applies to the subject site and is regulated by the Regional Water Quality Control Board ("RWQCB"). This Plan does not address compliance with those regulatory requirements, but requires that the City, and its general contractor, implement and employ all required storm water control measures.

As a general rule, soils that meet the Remedial Goals of a given study area within the Railyards may be utilized for further construction purposes in that given area, or in another Study Area if they meet its respective Remedial Goals as well. Soil excavated from the Sacramento Station Study Area may be tested, where needed, for the full range of Railyards Remedial Goals before it is utilized in another Study Area. Soils exceeding Remedial Goals, should they be encountered and appropriate regulatory and business arrangements are made (outside the scope of this plan), will be handled in accordance with the measures set forth in this Plan for Impacted soil, defined below.

Groundwater is not expected to be encountered due to shallow nature of the excavation work. However, in the event any is extracted for construction control, it will be retained and tested. If any, water that meets discharge requirements will be discharged into the sanitary sewer under the proper permitting requirements. Water that exceeds discharge requirements is a contaminated media. Impacted groundwater will be treated in accordance with the applicable permits prior to discharge into the sanitary sewer.

2.2 Constituents of Concern

The Project area, as in the case of the Railyards as a whole, is characterized as having Constituents of Concern in soil and in groundwater at concentrations requiring remedial measures designed to protect human health and the environment. These Constituents of Concern include metals, volatile organic compounds (VOCs), semi-volatile organic compounds (SVOCs), and total petroleum hydrocarbons (TPH). Both friable and non-friable asbestos-containing materials (ACM) were also encountered in fill soils, transite pipes and various debris.

For the purposes of this Plan, impacted soil and media is defined as soil and media containing ACM or Constituents of Concern at concentrations above the Remedial Goals for the Study Area from which they were excavated (Sacramento Station).

3.0 Soils and Groundwater Handling

3.1 Rationale for Soil Management

The procedures in this Plan apply to any soil or groundwater disturbing activities that are performed at the site as part of the Project, regardless of the certification status or remedy implementation.

This Plan ensures that excavated soils and extracted groundwater (although groundwater is not expected at this Project) that meet Remedial Goals are appropriately handled in their origination area and in the recipient areas by the appropriate party, and are disposed offsite or are transported elsewhere within the Railyards in accordance with the procedures set forth in this Plan.

As a general rule, soil may be either returned to the same excavation from which it was excavated or relocated to another area of the Railyards if it meets the Remedial Goals for that area. In cases where soils are relocated to different study areas from which they are excavated (if appropriate regulatory and business arrangements are made, beyond this Plan), a soils sampling protocol to establish soil conditions will be implemented. The sampling protocol will be in accordance with the procedure set forth in this Plan. The intent of these protocols is to make certain that soils transported meet the Remedial Goals for the receiving Study Area, should this be an option, as well as the originating Study Area.

As a general rule for this project, it is likely that excavated soils and other material in this Project will remain within the same soils study area (the Sacramento Station) hence making the originating and receiving soil study areas the same area. Contractor may elect at no additional charge to dispose of material off-site, but must follow all applicable regulations related to the transport and disposal of regulated waste.

No soils or material from the Railyards shall be exported to any other sites outside the Project area and the Railyards for any purpose other than disposal at regulated facilities, unless prior approval from DTSC is secured.

For the purpose of transportation of soil within the Railyards, properties owned by the City and others that are within the Railyards boundary are considered a single regulated unit without boundary crossing regulations. However, transportation of impacted soils can only occur on City streets, if needed, with DTSC approval and with the full implementation of appropriate DOT hazardous waste regulations, including training, profiling, manifesting, and appropriate licensing.

Based on the history of industrial activity at the site, workers should expect to encounter significant debris, foundations, industrial deposits, and foundation remnants in fill soils. Debris may and will consist of scrap metal associated with the railroad industry, concrete fragments and foundation pieces, rock fragments such as granite of various sizes, and wood debris. Brick and asbestos containing material (ACM) may be encountered. ACM-free debris does not pose an unacceptable risk to construction workers. Bricks on their own are not likely a cause of concern, unless coupled with other factors. In some areas in the past, brick, metal debris and ACM have often been associated with foundry waste that generated impacted soils that have required remediation. In the event bricks, metal debris or ACM are encountered, the EOPM

must be notified. The EOPM will assess the need for material handling procedures and, as appropriate, direct impacted brick and/or ACM to be placed in a secure storage area by appropriate ACM-licensed contractors and appropriately credentialed oversight professionals. Once placed in the secure storage area, the EOPM will determine the need for additional testing, special handling and reporting.

3.2 Site Soils and Area Use Classification

As previously noted, and as a general rule for the Railyards, all soils, groundwater (although not expected), material and waste generated or handled are considered in a temporary status, subject to their respective handling and characterization requirements, until final disposition has been determined and secured in accordance with their respective applicable requirements, approvals and agreements. All stockpiles of any kind are considered temporary until such stockpiles are characterized and placed in their final location following appropriate handling, profiling and/or treatment. For these purposes, excavated soils will be classified into 3 general categories:

1. Non-Impacted Soils (Reuse Soils): These are soils excavated from previously remediated and/or certified areas with no apparent evidence to indicate that Remedial Goals have been exceeded (such as the absence of debris, discoloration, and odors), as determined by the EOPM or designated personnel.

2. Suspect Soils: Soils excavated from previously remediated and/or certified areas with apparent indications (through the presence of discoloration, odors, PID, suspect material and debris, or similar indicators) that Remedial Goals may be exceeded as evident from site experience and observations of the EOPM or designated personnel.

3. Impacted Soils: Excavated soils which exceed Remedial Goals for a given study area from which they were excavated as determined by laboratory analytical results or which are expected to exceed those Remedial Goals as evidenced by excessive discoloration, presence of ACM, notable odors, sheen, or free product, as determined by the EOPM or designated personnel. Impacted Soils will be excavated by the City in order to maintain the construction schedule and will be stockpiled at designated areas for subsequent treatment or disposal.

The Project soil handling methodology has been planned to follow a methodical execution that maintains adherence to the approved regulatory framework while simultaneously allowing contractors sufficient ability and clear process to implement its construction activities. In order to achieve this goal, the City has defined areas for laydown, access, construction, and support purposes as necessary for the Project, as depicted in Figure 1.These areas can be modified with the approval of the relevant parties and land owners where activities occur.

Upon selection of contractor, the following areas, as depicted on Figure 1, will be further defined and established for implementation. Once established, the standard operating procedures and protocols detailed in this Plan will be implemented for the subject areas.

1. Construction access roads: These roads will be within the Railyards to be used strictly for access and transportation purposes. Contractor may be allowed to use the temporary F Street fire road by accessing across the Service Tunnel entrance. Contactor will remove

bollards and opening gate just west of south Service Tunnel. An access plan will be required to control public exposure and access, as well as Amtrak crossing points in the same area. Use and access by contractor may occur only following submittal and approval of a relevant plan to the City.

2. Decontamination areas: Locations that will be established to inspect and clean trucks and other heavy equipment prior to departing from impacted areas to non-impacted areas.

3. Access to public roads: An access plan, including access points to public roads, will be identified and used for general construction purposes. This plan must be approved by City before implementation. Should the need arise for the transport of regulated material or waste on public roads (except to and from areas of the Railyards), the relevant regulations governing the transport of hazardous material, found at Title 49 of the Code of Federal Regulations, will be followed.

4. Temporary use of internal Railyards Roads: Internal Railyards access roads may be used to transport soil categories from the southern area of the Railyards (within the Sacramento Station) to the northern area of the Railyards, if needed. Approval of City and other owners is a requirement for this use, which is subject to discretion and independent arrangements between contractor and the relevant owners.

5. Concrete/asphalt processing: Areas that are designated for appropriate concrete and asphalt processing and potential re-use.

6. Permanent soil staging: This is a holding area where soils eligible for reuse at the Railyards that are no longer needed by the Project will be held for subsequent use by other projects.

7. Construction route requiring stabilization with crushed rock: These are construction areas that may be needed requiring some road stabilization to enable use.

8. General staging: This is the overall staging areas for the Project, where staging of construction material and equipment will occur. With exception of soil, concrete, vegetation and AC, the contractor must find own place to stage materials.

9. Suspect soil staging: This area will be designated for the holding of soils and material suspected to be impacted.

3.3 Contractor's Excavation and Handling Approach

Prior to the commencement of the Project, the contractor shall submit to the City an excavation and handling plan that identifies all needed elements. These elements include all soil excavations, soil and material hauling and transportation, among other Project requirements. This plan by the contractor will be prepared in accordance with the conditions set in this document, and will be approved by City.

3.4 Project-Specific General Handling Conditions

Along with the contractor's plan, project-specific general handling conditions determining procedures for handling various types of potential material should be approved. These types of

material include vegetation, metal and wood scrap, asphalt deposits, and bricks. In general, the following will be implemented:

As a general rule, the following will be implemented:

1. No scrap metal of any kind will be transported outside of the construction area designated without City approval.

2. No vegetative matter or waste will be transported to outside of the construction area without City approval.

3. The locations of the completed excavations, soils and material placed and generated stockpiles will be quantitatively determined using appropriate methods (e.g. surveys, GPS).

4. In the area where Suspect material or known Impacted material are held, the final clearance of the surveyed volume will include additional scraping of at least 3 inches of soils below originally surveyed grade. As such, surfaces in these areas will be prepared, graded and surveyed for original grade elevations prior to depositing any soils.

5. Where and if needed, a protective cover, such as plastic sheeting, will be used prior to stockpiling and handling soils. Plastic sheeting may be needed to protect original ground from newly deposited impacted soils or for purposes of complying with the requirement of the Project's Strom Water Pollution Prevention Plan, as necessary. Specifically, 20 mil HDPE plastic sheeting and runoff berms will be used if soil moisture is such that free liquid is released from the soil or if soils are impacted with product that may be released or leached out of the soil mass onto original grade.

6. Dust will be maintained to acceptable levels per the project-specific health and safety plan and existing regulations using water or other appropriate surface treatment.

4.0 Soil Management Protocol

4.1 Holding Areas

During construction activities, workers may encounter soils that have visual or odor indications of being impacted with Constituents of Concern to levels that exceed Remedial Goals for the study area from which they were excavated (Sacramento Station). Such soils would fall under the categories of Suspect or Impacted Soils. The EOPM must be immediately notified if such conditions are encountered.

The Project will utilize the agreed upon holding areas for known impacted soils and for Suspect soils as set forth on Figure 1. The area where soils exceeding Remedial Goals will be held (known impacted soils) is to be designated as an exclusion zone and will be limited in access to authorized personnel only (Figure 1). In the event that Suspect soils are encountered, upon direction from the EOPM, they will be transported to their respective holding area pending final determination and disposition.

The specific size and construction details of these areas will be finalized in coordination with the general contractor and City.

The holding areas will be designed to receive loads of Suspect soil from dump trucks or other methods as determined by the contractor and agreed to by City. Suspect soils held in the exclusion zone will be stabilized if needed (e.g., covered with plastic sheeting or sprayed with a quick hardening foam, or equivalent) as soon as practical after being placed within the secure storage area, until it can be demonstrated that the soil meets the relevant Railyards remedial goals. SWPPP responsibilities will be completed by City and its general contractor. The holding areas will be clearly marked and staked.

Suspect soils held in their respective holding areas are intended to remain for a brief period of time, and shall be stabilized only if needed in compliance with dust control and SWPPP measures. This action is intended to limit release of wind-blown dust from the stockpiles during the holding period. All soils placed within the holding areas pending disposition shall be segregated in a manner that avoids commingling of different constituents.

Within the holding area, soil will be sampled under the direction of the EOPM in accordance with soil profiling procedures established in this Plan. If Suspect soils within their respective soil staging area are characterized as containing Constituents of Concern above Remedial Goals, the soils will be moved to the area where known Impacted soils are held, and will be placed on plastic sheeting as appropriate, as soon as possible.

The respective exclusion zones for a given Project will be restricted to authorized personnel only with 40-hour HAZWOPER training for workers and the needed training for managers. The EOPM shall be responsible for coordinating removal and/or treatment of soil stockpiled in the holding area that contains constituents in excess of construction worker cleanup goals and that requires handling, disposal and/or treatment.

4.2 Soil Stockpile Types

There are three categories of soils, Non-Impacted (Reuse soils), Suspect and Impacted. This section includes the defining characteristics of generated stockpiles for these soil categories and the respective handling and management procedures to be followed.

All generated stockpiles for the various categories of encountered soils, Non-Impacted, Suspect and Impacted, are temporary. Final stockpiles are only those that have been profiled and determined to meet Remedial Goals, and are held for long-term use on-site.

It is anticipated that soils will be categorized as Non-Impacted. Non-Impacted stockpiles will be returned to the construction area for backfilling and grade adjustment, as needed. Suspect stockpiles that have been generated will be characterized as soon as practicable to facilitate construction expediency and appropriate management, but no later than thirty days after stockpile formation unless the stockpile is moisture conditioned and fully wrapped in plastic sheeting. After a Suspect or Impacted stockpile has been characterized, it will be handled according to its classification.

The volume and placement of individual stockpiles will depend on its category, and will be based on the plan provided by the contractor. As guidance, the following may be used:

- Non-Impacted stockpiles: These may constructed to approximately 250-500 cubic yards in volume, and may be initially placed in their appropriate areas as agreed upon by the contractor, City and IAH. These stockpiles may be constructed to allow for visual inspection. Once a stockpile reaches a volume of 250-500 cubic yards, a second stockpile is started adjoining to it to allow for any needed management on the first (if any) while the second is being constructed. The process is continued until mass excavation is finalized for a given feature.

  Soils within the Non-Impacted stockpiles that may appear to be suspect will be moved to the areas designated for Suspect soils. No sampling will be required for these Non-Impacted stockpiles if they remain at the Railyards and are returned to their initiating excavation. If these stockpiles are relocated to be used for another purpose in different areas, owned by a different owner, these Non-Impacted stockpiles will be sampled for the relevant Constituents of Concern using 1 discrete sample per 500 cubic yards. Sampling requirement may be triggered by transporting soils onto different remediation study areas where Remedial Goals are more restrictive. In all cases, soil stockpiles will be surveyed and tracked to establish record of deposition and destination.

- Suspect or Impacted stockpiles will be located in their respective area in 250-500 cubic yard piles, as needed and as space allows, and will be identified by the excavation that the soil came from. Soils that potentially have the same Constituents of Concern as determined by laboratory analytical results will be combined to form the same stockpiles. Suspect stockpiles that are found to be impacted will be moved to areas designated for Impacted soils upon characterization and profiling, and will remain pending their final disposition. These stockpiles will be sampled with 1 discrete sample to be analyzed for the subject Constituents of Concern for every 250-500 cubic yard, as needed. Where necessary, the EOPM may utilize a 4:1 composite sampling for non-VOC analyses to assist in determining stockpile conditions as an additional step to the discrete sampling step.

4.3 Stockpile Profiling

Suspect and Impacted stockpiles handled by the City will be profiled by collecting appropriate samples as previously discussed. These stockpiles will remain until the soil reaches its final disposition, which may include:

- ***Off-Site Disposal:*** Soils that fail Remedial Goals
- ***Reuse:*** Soil that does not contain any Constituents of Concern above the Remedial Goals

Reuse soil may be used as fill within the Project area or the Railyards, if agreed upon by owners, so long as it meets the Remedial Goals for its respective area of use, as directed by Property Owner.

All Reuse soil stockpiles will be labeled with a sign designating it as reuse soil in accordance with this Plan. Based upon the criteria established herein, no soil that exceeds Remedial Goals for the area of intended reuse or debris (including, but not limited to ACM) will be commingled with reuse soil stockpiles.

Soils stockpiles may be an accumulation of smaller stockpiles that meet the same Remedial Goals. City will retain information sufficient to allow it determine which soils (by quantity) originally exceeded the Remedial Goals for the area from which they were excavated and which soils (by quantity) met those goals when they were excavated.

4.4 Stockpile Management

Fugitive dust emission controls, volatile chemical emission controls, and storm water BMPs will be in place for each stockpile as follows:

- ***Fugitive Dust Emission Controls*** – During the wet winter months, fugitive dust emissions from stockpiles is not expected to be a concern. During the active construction (dry) season, the Contractor will implement standard dust control procedures for earthwork construction. These dust control procedures are anticipated to follow the SMAQMD Fugitive Dust Rule 403. The dust control procedure for stockpiles will be to apply water with a sprayer on a water truck, with or without a tackifier additive, to the stockpiles, or an equally protective measure.
- ***Volatile Chemical Emission Controls*** – The control of chemical emissions (if any is encountered) will be dictated by the allowable limits established in the Health and safety Plan (for worker protection), the *Air Monitoring Plan* (for protection of the nearby public), or the SMAQMD. Specifically, the SMAQMD requires that the stockpiles be covered with plastic sheeting if the soil contains greater than 50 milligrams per kilogram (mg/kg) total VOCs, which includes total purgeable petroleum hydrocarbons. Pending analytical results, any stockpile that is judged to likely contain VOCs at a concentration near the 50 mg/kg threshold will be covered with plastic sheeting as soon as practicable. If a given soil stockpile is judged unlikely to contain Constituents of Concern above this threshold based on analytical data, field observations, and/or measurements, emission controls will not be implemented for that stockpile.

- ***Storm Water BMPs*** –During the construction season, typical construction storm water BMPs will be implemented in the stockpile holding areas, and around any impacted or suspected impacted stockpiles, to minimize runoff and erosion of stockpiles as outlined in the Project's SWPPP.

  Some of the storm water BMPs may include: (1) placing silt fences and straw bales at the base and around the perimeter of the stockpile; (2) compacting the surface of the stockpile to reduce the amount of loose soil that creates sediment and erosion problems; and (3) covering stockpiles with plastic sheeting. Provisions of the SWPPP stipulate that sediment and COC runoff from the site will not be permitted.

  The storm water BMPs for the reuse soil stockpiles will be implemented like a typical Non-Impacted soil grading project to prevent nuisance associated with storm water and sediment runoff. Given the chemical nature of reuse stockpiles, storm water BMPs to control contamination of storm water runoff due to their presence are unlikely to be necessary.

4.5 Stockpile Locations

Stockpile location and placement (Figure 1) within the Project area will be specifically determined based on Project-specific needs, in collaboration with the scheduled contractor and the property owner, and will take into account the following:

- ***Proximity to the Property Line*** – Stockpiles will be constructed away from property lines to the extent possible, to reduce the potential nuisance to off-site entities from dust, noise, and emissions without significantly restricting construction activities.
- ***Excavation Sequencing*** –The locations selected for stockpiles will depend on the planned excavation sequencing as set by the contractor and approved by City, so that stockpiled soil does not interfere with remedial excavations or associated activities.
- ***Original Grade Distinction*** –Before soil is stockpiled in an area, the original grade elevations will be appropriately surveyed using GPS or other survey equipment, as appropriate, and will be distinguished with a sheet of plastic such that the original grade may be restored without leaving impacted soil or inadvertently over-excavating the area when removing the stockpile. These stockpile areas may also be excavated to a shallow depth below the original grade to ensure that impacted soil has been removed, and handled according to the provisions of this Plan.

4.6 Stockpile Tracking & Recordkeeping

The EOPM will oversee the implementation of a reliable tracking by Contractor and recordkeeping system to efficiently manage each stockpile generated. This is expected to include frequent Global Positioning System (GPS) surveying and mapping of stockpiles to produce stockpile maps. A stockpile needs to maintain a unique identity throughout the characterization process.

4.6.1 Stockpile Tracking

The types of information associated with each stockpile will include:

- An identification number that links stockpiles with the excavation source;
- The location of the stockpile within the Project utilizing a GPS such that one stockpile is not mistaken for another;
- The date(s) generated;
- Sampling information, if any, including the number of samples collected, the date of sampling, and the analyses requested (information contained in a typical chain-of-custody document); and
- Analytical data, if any, that characterizes the stockpile and facilitates its disposition.

A weatherproof sign will be posted in each stockpile that identifies:

- The stockpile by number;
- The Constituents of Concern expected in the soil, if any;
- The excavation number that was the source of the soil;
- The date the stockpile was sampled, if any; and
- The disposition of the soil once it is characterized.

4.7 Stockpile Disposition Decision Making

Before final disposition for a stockpile is determined, the following will be reviewed:

- The source and quantity of the soil (excavation identification), including the study area from which the soil originated;
- The expected Constituents of Concern, if any;
- Whether or not ACM was visually detected in the soil either visually or though appropriate testing;
- The sampling frequency from the stockpile;
- The analytical data from the stockpile; and
- Observations and field screening data from daily reports documenting the initial excavation of the soil.

Throughout the project, a working list of stockpiles will be maintained. In addition to the working list, each stockpile will have a posted sign with the identification and characteristics of the stockpile, placed by Contractor. The contractor will not be allowed to move or combine stockpiles without explicit approval from EOPM.

4.8 Control of Storm Water, Erosion, Dust, and Volatile Chemical Emissions from Stockpiles

The procedures for controlling storm water runoff, erosion, dust, and emissions must be protective of the environment and human health both on and off site, but must also be practical and implementable. In general, stockpiles will not be covered with plastic sheeting unless it is required to reduce emissions or fugitive dust in accordance with permit requirements and health and safety requirements discussed below. However, if encountered, stockpiles with high VOCs and/or volatile TPH emissions will be covered as soon as practicable in accordance with SWPPP requirements.

The control procedures during the dry construction season will be different from those of the wet winter months. The basic requirements for the control procedures at any time of the year will be to:

- Prevent off-site and on-site migration of contaminants through storm water, sediment, or dust;
- Control fugitive dust emissions in accordance with the SMAQMD Fugitive Dust Rule 403, the HSP requirements, and local grading ordinance requirements;
- Minimize cross contamination on site; Control volatile chemical emissions in accordance with SMAQMD requirements and the Health and Safety Plan;
- Perform adequate storm water control and monitoring, as described in the SWPPP, to ensure that inappropriate storm water runoff and run-on does not occur;
- Perform adequate site and perimeter control of fugitive dust emissions and volatile chemical emissions.
- No construction related activity will be conducted for this Project unless covered under an approved SWPPP for the area where such activity will occur.

5.0 Sampling and Analysis

For the purpose of implementing this Plan, all active soil handling activities, including grading, excavation, and stockpiling will be monitored and observed by the EOPM or designated personnel. Beyond qualitative observations of discoloration, odors and debris, the EOPM will utilize quantitative indicators to assist in categorizing soils, where needed at the discretion of the EOPM. These quantitative indicators may include the use of photo ionization detector (PID). Appropriate EPA-approved laboratory analytical methods for the various types of analytes suspected present will be utilized as described in this Plan. These primarily include methods to evaluate volatile organic compounds, semi-volatile organic compounds, heavy metals, petroleum hydrocarbon, asbestos containing material, and others as needed.

All observations and data obtained from field instruments will be recorded in logs associated with the respective activities. The logs will include: the name of the person conducting the monitoring; date, location and depth of soils being handled; qualitative indicators observed (discoloration, odors, debris, vessels, product, pipes, etc.); the type of field monitoring used (PID or others); readings recorded; and recommendation made for possible laboratory testing. Additionally, all handled soils will be tracked and surveyed in terms of volume, origination, destination, and final disposition.

At the direction of the EOPM, soil samples will be collected from stockpiles to characterize constituents present in excavated soil. The objective of stockpile sampling is to characterize excavated soil to provide the necessary data to support decisions regarding the appropriate disposition of the soil and appropriate stockpile management controls. The observation, tracking and sampling methodology described previously will be utilized as needed.

6.0 Concrete and Asphalt Processing

Concrete and asphalt debris generated during construction may be recycled and used on-site or through on-site or off-site crushing. In the event the volume of concrete and asphalt does not warrant processing, such material can be cleaned of soils, sludge and other debris to be used as recyclable on-site. Such use can only occur with City approval and following EOPM review and inspection. In some cases, testing may be necessary to evaluate co-mingled waste relative to remedial goals. It is highly advisable to maintain concrete and asphalt separate from each other and separate from existing soil and other debris. Such segregation would best allow the potential for re-use, where possible and regulatory threshold is met.

In general, debris, concrete or asphalt coated with oil or sludge will be segregated from other material stockpiled to be profiled as Suspect, to be tested for further designation. Contractor will segregate and dispose of Impacted Debris prior to re-use or crushing, if needed. Bricks will not be included in the concrete and asphalt crushing, unless agreed to specifically by Project Manager, contractor, and City. If used, on-site crushing will likely utilize a transportable concrete crusher and occur within the area designated as the asphalt and concrete stockpile area. The on-site recycling/processing plant will be operated and permitted by the contractor, and will be temporarily located in a designated area agreed upon by land owners, Project Manager and contractor.

City will verify that the contractor or the party responsible for operating the transportable concrete crusher is a contractor or facility licensed to perform this task. Dust control measures will be implemented for on-site crushing activities in accordance with applicable regulations, including those of SMAQMD. Any exceedence of fugitive dust emissions from crushing activities will result in implementing engineering controls such as water spraying during the crushing. In addition, crushing will be performed in accordance with City of Sacramento noise ordinances and during permitted work times.

The crushed concrete and asphalt will be a potential source of fill material for backfilling excavations, covering haul roads, and miscellaneous fill purposes on site. On-site use of the recycled concrete and asphalt is an environmentally responsible reuse of a valuable fill material. Additionally, by using the crushed material as fill at the site, the transportation of import fill material will be reduced.

Before recycled concrete and asphalt is used as fill on site or for covering haul roads, the owner of the material will sample the recycled or crushed material at a minimum frequency of one four-point composite sample for every 500 to 1,000 cubic yards. Samples will be analyzed for Title 22 metals. Samples will not be analyzed for other constituents, such as hydrocarbons, because any debris coated with oil or sludge will have already been segregated as Suspect. The segregation of material potentially coated with hydrocarbon will occur at the point of generation as inspectors and the EOPM observe the removal of concrete and asphalt. In areas where significant discoloration or odors are noted, indicating the presence of hydrocarbon or similar organics at a level potentially exceeding acceptable thresholds, such material will be segregated and placed in the same area as Suspect Soils if approved by the property owner. As such, for recycled or crushed concrete, metals are expected to be the only possible chemical of concern. For crushed asphalt, PAHs and heavy hydrocarbons, inherent to the mix, may also be present. If the metals, PAHs, and TEPH detections are below the remedial action objectives, the material will be deemed acceptable for use as on-site fill material. If the metals detections are

above the site-specific remedial action objectives, the recycled or crushed material is designated as Impacted Debris. The City's general contractor will stockpile the Impacted Debris for final disposition.

7.0 Wells and Associated Remediation Systems

The Railyards property contains an extensive network of ground water monitoring and extraction wells. UPRR is responsible for the long-term O&M of the wells, as they are part of the ongoing restoration of the property pursuant to approved plans for the protection of human health and the environment.

The monitoring and extraction wells are required by DTSC to be protected and preserved and cannot be removed without DTSC concurrence. Further, well installation, protection, and removal are subject to ordinances established by Sacramento County. All construction activities must be conducted in a manner that protects the existing wells and conduits.

DTSC should be notified of any apparent conflicts between intended activities and existing wells. Any damage to wells or remediation systems caused by construction activities is the responsibility of the construction company to repair, consistent with DTSC and County direction.

No new wells will be installed without approval from the landowner. Any new wells installed at the Railyards will be located, with the approval of the property owner, where their impact on future or ongoing construction projects at the Railyards will be minimized, to the greatest extent technically feasible.

Extraction wells pump ground water that may present a threat to human health or the environment. Although operating wells represent no threat, uncontrolled release of water from a damaged well could pose a health threat and must be avoided.

7.1 Encounter of Previously Abandoned Monitoring Wells

Throughout the remediation of the site a number of ground water monitoring wells have been abandoned. In accordance with County of Sacramento Environmental Management Department (County) requirements, the top five feet at these locations was over excavated and a concrete cap was installed at 5 feet below ground surface. All wells have been abandoned in accordance with County regulations. If the Contractor encounters well caps during Project, then EOPM should be notified to notify the DTSC and a replacement cap must be installed a minimum of 2 feet below finish grade in accordance with County requirements.

8.0 Dewatering Management Plan

Groundwater is not expected to be encountered due to shallow excavations.

9.0 Health and Safety Guidance

This brief section describes the general health and safety guidance that are to be followed by contractors performing Project construction activities. The contractor shall provide a Project-specific Health and Safety Plan to be approved by Project Manager. In general, trained personnel shall conduct work in areas with indications of contamination above Remedial Goals until potential hazards of such areas are appropriately evaluated.

9.1 Hazardous Chemicals Detected On Site

Remedial investigations identified the presence of numerous Constituents of Concern (including VOCs, SVOCs, TPH, ACM, and metals) in site soils and/or ground water. Cleanup goals have been established to be sufficient for construction to occur. It is expected that soil in remediated portions of the Railyards will not pose an unacceptable risk to construction workers, unless there are indications that the soil exceeds Remedial Goals.

9.2 Known and Suspected Hazards

In developing their own site-specific health and safety plans for their specific activities and trade, all contractors shall consider the following known hazards:

- Active railroad tracks on the site
- Abandoned concrete sumps, vaults and tunnels
- Unknown pipes, conduits and underground storage tanks
- Open excavations from remediation activities
- Abandoned and operating utilities (both subsurface and above ground)
- Debris
- Possible presence of the Constituents of Concern described above
- Groundwater monitoring wells and remediation systems and equipment.

Table 1: Current Railyards Remedial Goals for Each Major Study Area

	Sacramento Station (mg/kg)	Central Corridor Car Shop Nine Northern Shops (mg/kg)	Central Shops Proposed (mg/kg)	Lagoon Proper (mg/kg)	Northwest Corner (mg/kg)
Volatile Organic Compounds (EPA 8260)					
1,1,1-Trichloroethane	NE	2.0	2.0	2.0	2.0
1,1,2,2-Tetrachloroethane	NE	NE	0.01	NE	NE
1,1,2-Trichloroethane	NE	0.0049	0.03	0.0049	0.0049
1,1-Dichloroethane	NE	0.05	0.05	0.05	0.05
1,2-Dichloroethane	NE	0.005	0.005	0.005	0.005
1,1-Dichloroethene	NE	0.06	0.06	0.06	0.06
1,2-Dichloroethene (total)	NE	0.06	0.06	0.06	0.06
cis-1,2-Dichloroethene	NE	0.06	0.06	0.06	0.06
trans-1,2-Dichloroethene	NE	0.1	0.10	0.1	0.10
1,2-Dichloropropane	NE	NE	0.05	NE	NE
1,3-Dichloropropene (cis)	NE	NE	0.005	NE	NE
trans-1,3-Dichloropropene	NE	0.005	0.005	0.005	0.005
1,4-Dioxane	NE	NE	0.03	NE	NE
Acetone	NE	7.0	63	7.0	7
Benzene	NE	0.01	0.01	0.01	0.01
Bromodichloroethane	NE	NE	0.80	NE	NE
Carbon tetrachloride	NE	NE	0.005	NE	NE
Chloroethane	NE	NE	0.16	NE	NE
Carbon disulfide	NE	7.0	7.0	7.0	7.0
Chlorobenzene	NE	0.2	0.2	0.2	0.2
Chloroform	NE	0.011	0.7	0.011	0.011
Dibromochloroethane	NE	NE	0.60	NE	NE
Ethylbenzene	NE	0.29	0.30	0.29	0.29
Methyl ethyl ketone	NE	NE	42	NE	NE
Methylene Chloride	NE	0.05	0.05	0.05	0.05
Styrene	NE	1.0	1.0	1.0	1.0
Tetrachloroethene	NE	0.05	0.05	0.05	0.05
Toluene	NE	0.42	0.40	0.42	0.42
Trichloroethene	NE	0.05	0.05	0.05	0.05
Vinyl chloride	NE	0.005	0.005	0.005	0.005
Xylenes	NE	0.17	0.20	0.17	0.17

	Sacramento Station (mg/kg)	Central Corridor Car Shop Nine Northern Shops (mg/kg)	Central Shops Proposed (mg/kg)	Lagoon Proper (mg/kg)	Northwest Corner (mg/kg)
2-Butanone	NE	42	42	42	42
2-Hexanone	NE	29	29	29	29
4-Methyl-2-pentanone	NE	0.99	0.99	0.99	0.99
Semi-Volatile Organic Compounds (EPA 8270)					
1,2-Dichlorobenzene	NE	NE	23	NE	NE
1,3-Dichlorobenzene	NE	NE	376	NE	NE
1,4-Dichlorobenzene	NE	NE	4.3	NE	NE
2,4-Dimethylphenol	NE	3,900	2,198	NE	3,900
2-Methylnaphthalene	NE	46	112	46	46
2-Methylphenol	NE	9800	5,495	NE	9,800
4-Chloroaniline[1]	NE	NE	NA	NE	NE
4-Methylphenol	NE	980	980	980	980
Acenaphthene	NE	1,161	1,161	1,161	1,161
Acenaphthylene	NE	654	654	654	654
Anthracene	NE	17,350	17,350	17,350	17,350
Benzo(a)anthracene	NE	2	1.0	2	24.14
Benzo(a)pyrene	NE	0.2	0.10	0.2	13
Benzo(b)fluoranthene	NE	2	1.0	2	9.62
Benzoic acid	NE	780,000	780,000	780,000	780,000
bis(2-Chloroethyl) ether	NE	1.1	1.1	1.1	1.1
Butyl benzyl phthalate	NE	13,889	13,889	13,889	13,889
Dibenzofuran	NE	780	189	780	910
Diethyl phthalate	NE	1,572	1,572	1,572	1,572
Di-n-octylphthalate	NE	3,900	3,900	3,900	3,900
Fluoranthene	NE	6,700	3,351	6,700	20
Fluorene	NE	1,220	1,220	1,220	1,220
Indeno(1,2,3-cd)pyrene	NE	2	1.0	2	28
Isophorone	NE	2,700	2,700	2,700	2,700
N-Nitrosodiphenylamine	NE	1.70	1.70	1.70	1.70
Naphthalene	NE	24.0	3.3	24.0	24.0
Benzo(g,h,i)perylene	NE	5,000	2,513	5,000	223,894
Benzo(k)fluoranthene	NE	2	1.0	2	9.62
bis(2-Ethylhexyl)phthalate	NE	14.2	14	14.2	14.2
Carbazole	NE	0.97	0.97	0.97	0.97
Chrysene	NE	20	9.8	20	33.8
Di-n-butylphthalate	NE	1,409	1,409	1,409	1,409

	Sacramento Station (mg/kg)	Central Corridor Car Shop Nine Northern Shops (mg/kg)	Central Shops Proposed (mg/kg)	Lagoon Proper (mg/kg)	Northwest Corner (mg/kg)
Dibenzo(a,h)anthracene	NE	0.57	0.29	0.57	16.4
Pentachlorophenol	NE	31.0	9.9	31.0	31
Phenanthrene	NE	780	2,290	780	1,983
Phenol	NE	0.6	31,523	0.6	0.6
Pyrene	NE	4,673	2,477	4,673	4,673
N-Nitrosodi-n-propylamine	NE	NE	0.22	NE	NE
Petroleum Hydrocarbon (EPA 8015)					
TPH-Diesel	100[a]	See TEPH	NE	See TEPH	See TEPH
TPH	See TPH-Diesel	See TEPH	See TEPH	See TEPH	See TEPH
TEPH - 5 feet from G.W.	NE	3,000	3,000	3,000	3,000
TEPH - Above 5 feet from G.W.	NE	10,000	10,000	10,000	10,000
TPH-Kerosene	NE	See TEPH	NE	See TEPH	See TEPH
No. 2 Fuel Oil	NE	See TEPH	See TEPH	See TEPH	See TEPH
No. 4 Fuel Oil	NE	See TEPH	See TEPH	See TEPH	See TEPH
No. 6 Fuel Oil	NE	See TEPH	See TEPH	See TEPH	See TEPH
Oil	NE	See TEPH	See TEPH	See TEPH	See TEPH
O&G	NE	See TEPH	See TEPH	See TEPH	See TEPH
Motor Oil	NE	See TEPH	See TEPH	See TEPH	See TEPH
Stoddard Solvent	NE	See TEPH	See TEPH	See TEPH	See TEPH
Unknown Hydrocarbons	NE	See TEPH	See TEPH	See TEPH	See TEPH
Gasoline	NE	128.3	128.3	NE	128.3
Heavy Metals (EPA 6010 for CAM 17)					
Antimony	100	30	30	3	30
Arsenic	NE	76	29	16	106
Barium	NE	1,400	1,392	1,400	4,940
Beryllium	NE	20	17	NE	20
Cadmium	NE	9.5	9.5	9.5	19
Cobalt	NE	91	58	91	636
Chromium	NE	NE	NE	NE	NE
Chromium (trivalent)	NE	484	484	484	484
Hexavalent Chromium	NE	0.27	0.28	NE	0.27
Copper	1500	9,800	9,915	9,800	22,169
Lead	950	950	950	654	1,723
Mercury	NE	78	60	78	155
Molybdenum	NE	66	230	66	66

	Sacramento Station (mg/kg)	Central Corridor Car Shop Nine Northern Shops (mg/kg)	Central Shops Proposed (mg/kg)	Lagoon Proper (mg/kg)	Northwest Corner (mg/kg)
Nickel	NE	110	139	110	997
Selenium	NE	1,400	1,252	1,400	1,400
Silver	NE	1,400	1,252	1,400	1,400
Thallium	NE	22	17	22	22
Tin	NE	78,000	NE	78,000	78,000
Vanadium	NE	1,178	250	1,178	1,178
Zinc	2400	39,000	75,147	39,000	122,306

Key
mg/kg = Milligrams per kilogram
NE = Non established

a = As described in the Closure Report for Sacramento Station Hydrocarbon Area Soils (ERM 1994), the hydrocarbon area was characterized as an area of diesel fuel release. Compliance sampling was performed using analysis of TPH as diesel range hydrocarbons using SW-846 Method 8015 modified for diesel (< C-28) and approved by the DTSC.

Figure 1: Project Map

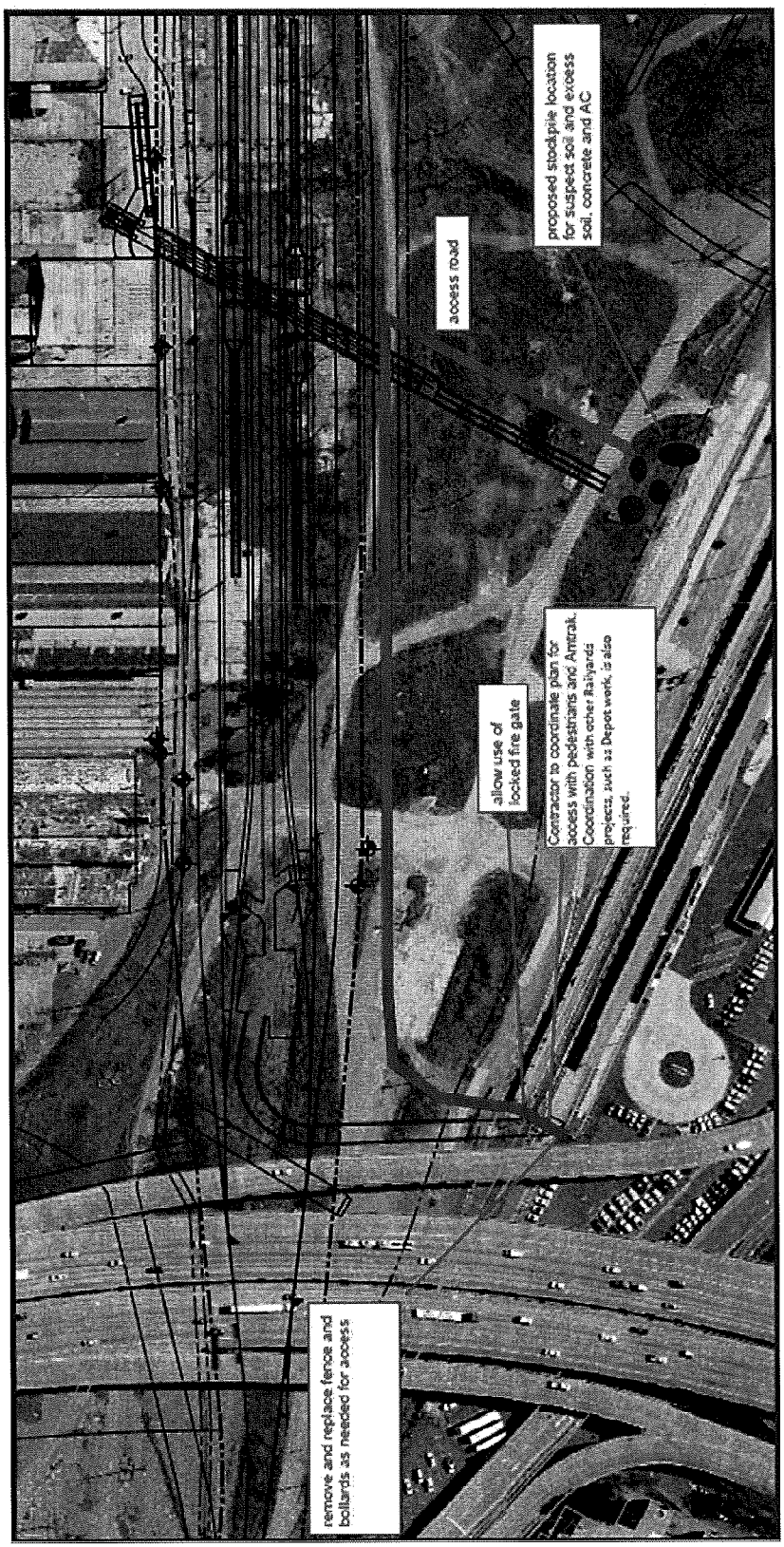

Figure 2: Major Remediation Study Areas

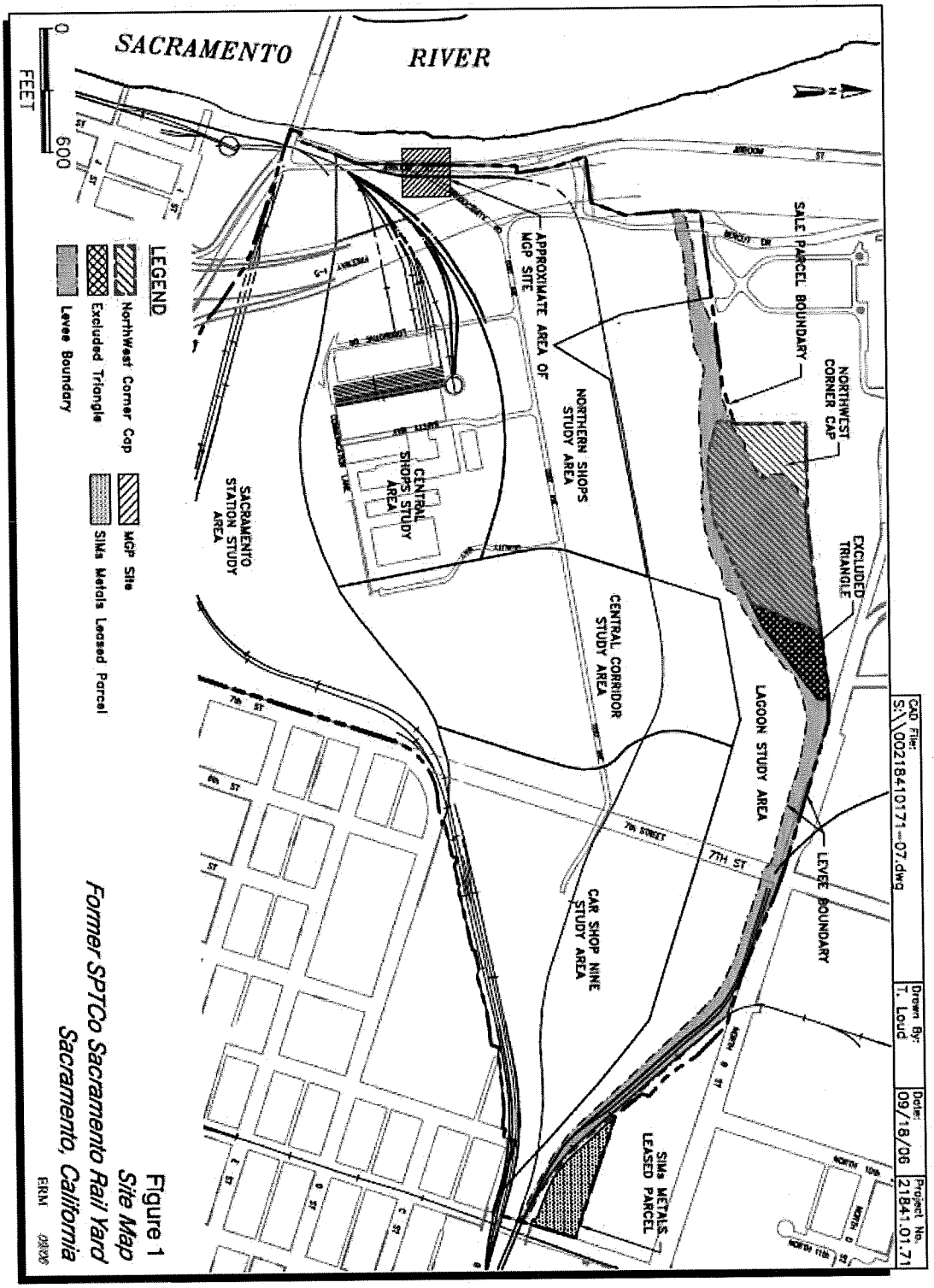

TO THE HONORABLE CITY COUNCIL
SACRAMENTO, CALIFORNIA:

In compliance with the Contract Documents, the undersigned hereby proposes to furnish all required labor, materials, supervision, transportation, equipment, services, taxes and incidentals required for:

WEST TUNNEL RAMPS ACCESS PROJECT
(PN: T15029031)
(Revised on 1/15/14)

in the City and County of Sacramento, California.

The Work is to be done in strict conformity with the Contract Documents now on file in the Office of the City Clerk, for the following sum:

Item No.	Item	Estimated Quantity	Unit	Unit Price	Total
1	Preconstruction Photographs	1	LS	$	$
2	Prepare Storm Water Pollution Prevention Plan	1	LS	$	$
3	Storm Water Annual Report	1	LS	$	$
4	Construction Site Management	1	LS	$	$
5	Traffic Control Systems	1	LS	$	$
6	Clearing and Grubbing	1	LS	$	$
7	Bollard to Remove	42	EA	$	$
8	Traffic Stripe and Pavement Markings to Remove	1	LS	$	$
9	Pavement Markers to Remove	1	LS	$	$
10	Pedestrian Boardwalk to Remove	325	SF	$	$
11	Concrete Curb, Gutter and Sidewalk to Remove	390	SF	$	$
12	Concrete Curb to Remove	110	LF	$	$
13	Concrete Valley Gutter to Remove	1,650	SF	$	$

14	Concrete Island to Remove	2,670	SF	$	$
15	Concrete Tunnel Headwall and Wingwalls to Remove	65	SF	$	$
16	Existing Fence to Remove	500	LF	$	$
17	Existing Gate to Remove	1	EA	$	$
18	Storm Drain Inlet to Remove	2	EA	$	$
19	Parking Booth to Remove	1	EA	$	$
20	Pay Station Shelter to Relocate	1	EA	$	$
21	Purple Martin Pole to Relocate	3	EA	$	$
22	Storm Drain Pipe to Abandon	38	LF	$	$
23	Roadway Excavation and Grading (F)	3,160	CY	$	$
24	Aggregate Base Class 2 to Place	1,460	CY	$	$
25	Curb and Gutter Type 1 to Construct	9	LF	$	$
26	Curb and Gutter Type 2 to Construct	100	LF	$	$
27	Curb Type 3 to Construct	830	LF	$	$
28	Curb Type 3 (Modified) To Construct	120	LF	$	$
29	Wheel Stop to Install	77	EA	$	$
30	PCC Edge Wall to Install	550	LF	$	$
31	Concrete Stairway to Construct	30	SF	$	$
32	Minor Concrete (Valley Gutter) to Construct	305	LF	$	$

33	Concrete Island to Construct	440	SF	$	$
34	4" PCC Sidewalk to Construct	11,900	SF	$	$
35	4" Colored PCC Sidewalk to Construct	1,850	SF	$	$
36	PCC Pedestrian Walkway to Construct	5,100	SF	$	$
37	Truncated Domes on New Ramps (36" x 48")	21	EA	$	$
38	Truncated Domes on New Ramps (36" x 60")	1	EA	$	$
39	Chain Link Fence to Install	50	LF	$	$
40	Railroad Track to Install	460	LF	$	$
41	Pedestrian Railing To Install	15	LF	$	$
42	Picket Fence to Install	630	LF	$	$
43	Pedestrian Barricade to Install	1	EA	$	$
44	Bollards to Install	8	EA	$	$
45	Gutter Drain No.20 to Construct	4	EA	$	$
46	Gutter Drain No.20 (Modified) to Construct	2	EA	$	$
47	3" PVC Storm Drain Pipe to Install	60	LF	$	$
48	12" Storm Drain Pipe to Install	240	LF	$	$
49	Slurry Seal Type 2 to Place	5,700	SY	$	$

50	Cold Plane AC Pavement (0.17' Max)	340	SY	$	$
51	Hot Mix Asphalt (3/4") Pavement to Place	970	TON	$	$
52	Hot Mix Asphalt (1/2") Pavement to Place	430	TON	$	$
53	Roadside Sign to Remove	13	EA	$	$
54	Roadside Sign to Relocate	1	EA	$	$
55	Roadside Sign to Place	22	EA	$	$
56	Thermoplastic Traffic Stripe to Place	110	LF	$	$
57	Thermoplastic Pavement Marking to Place	3,000	SF	$	$
58	Pavement Marker to Place	202	EA	$	$
59	Painted Pavement Stripe to Place	6,600	LF	$	$
60	Painted Stall Markings to Place	1	LS	$	$
61	Audio Bird Control Device to Install	1	LS	$	$
62	Automatic Irrigation System to Install	1	LS	$	$
63	Soil Preparation and Finish Grading	1	LS	$	$
64	Shrubs to Plant	1	LS	$	$
65	Landscape Maintenance	1	LS	$	$
66	Parking Lot Lighting Installation	1	LS	$	$

67	Permeable Interlocking Pavers	13,900	SF	$ _____	$ _____
68	Mobilization (5%)	1	LS	$ _____	$ _____

(F) – denotes final pay quantity

CONTRACTOR NAME: _____ TOTAL $_____

It is understood that this Bid Proposal is based upon completion of the Work within a period of **Fifty-Five (55) WORKING DAYS,** commencing on the date set forth in the written Notice to Proceed issued by the City to the Contractor.

In determining the amount bid by each bidder, the City may disregard mathematical errors in addition, subtraction, multiplication, and division that appear obvious on the face of the Proposal. When such a mathematical error appears on the face of the Proposal, the City shall have the right to correct such error and to compute the total amount bid by said bidder on the basis of the corrected figure or figures.

The City Council may reject any and all bids and waive any informalities or minor irregularities in the bids.

When an item price is required to be set forth in the Proposal, and the total for the item set forth separately does not agree with a figure which is derived by multiplying the item price times the Engineer's estimate of the quantity of work to be performed for said item, the item price shall prevail over the sum set forth as the total for the item unless, in the sole discretion of the City, such a procedure would be inconsistent with the policy of the bidding procedure. The total paid for each such item of work shall be based upon the item price and not the total price. Should the Proposal contain only total price for the item and the item price is omitted, the City shall determine the item price by dividing the total price for the item by the Engineer's estimate of the estimated quantities of work to be performed as items of work.

If the Proposal contains neither the item price nor the total price for the item, then it shall be deemed incomplete and the Proposal shall be disregarded.

The undersigned has examined the location of the proposed Work, the local conditions at the place where the Work is to be done, is familiar with the Contract Documents and is familiar and expressly agrees to the liquidated damages provision of the Contract Documents.

The undersigned has checked carefully all of the foregoing figures and understands that the City of Sacramento will not be responsible for any errors or omissions on the part of the undersigned in making up this Bid Proposal.

Enclosed is a Bid Proposal Guarantee, as required, consisting of a bidder's bond or other acceptable security for not less than ten percent (10%) of the amount Bid Proposal.

The undersigned agrees that all addenda received and acknowledged herein shall become a part of and be included in this Bid Proposal. This Bid Proposal includes the following addenda:

Add. # _____ DATE _____

Add. # _____ DATE _____

Add. # _____ DATE _____

NOTE: State whether your concern is a corporation, a co-partnership, private individual, or individuals doing business under a firm name.

_____

If the Bidder is a corporation, the Bid Proposal must be executed in the name of the corporation and must be signed by a duly authorized officer of the corporation.

If the Bidder is a partnership, the Bid Proposal must be executed in the name of the partnership and one of the partners must subscribe their signature thereto as the authorized representative of the partnership.

AMOUNT OF BID PROPOSAL GUARANTEE ENCLOSED:

($_____) not less than ten percent (10%) of amount Bid Proposal

_____ CERTIFIED CHECK
_____ CASHIER'S CHECK
_____ BID BOND
_____ MONEY ORDER
_____ OTHER SECURITY

CONTRACTOR:

By _____
(Signature)

_____
(Print or Type)

Title _____
Address _____
_____
Telephone No. _____

Fax No. _____

nail Address _____

Date _____

FOR CITY USE ONLY

Bid Bond Security
☐ Properly Signed ☐ *Improperly Signed*
☐ *Not Included* ☐ Not Required

Type of Deposit
☐ Bid Bond ☐ Cashier/Certified Check
☐ Other_____ Initial:_____

Contractor's License No. _____ Type _____

Expiration Date _____

Tax I.D. Nos.- Fed. _____ State _____

City of Sacramento Business Operation Tax Certificate No. _____
(City will not award contract if Certificate Number is missing.)

Please indicate if you are any of the following:

EBE_____ Cert #_____ SBE_____ Cert #_____

UDBE_____Cert #_____ M/WBE_____Cert #_____

DEPARTMENT OF
TRANSPORTATION

ENGINEERING SERVICES DIVISION

CITY OF SACRAMENTO
CALIFORNIA

915 I STREET, ROOM 2000
SACRAMENTO, CA
95814-2700

PH. (916) 808-8300
FAX (916) 808-8281

West Tunnel Ramps Access (T15029031)

Addendum No. 4

January 22, 2014

To all Potential Bidders:

Attached hereto are addenda items, which shall be incorporated into the bid proposal for above noted project. These changes shall be considered as part of the original documents, as if they were originally provided therein, and as such shall be used as contractual documents. All other terms, conditions, and specifications of the bid remain unchanged. Bidders must acknowledge receipt of this addendum prior to the hour and date specified in the bid request, or as amended, by one of the following methods:

(a) By acknowledging receipt, on the bid proposal form submitted; or
(b) By separate letter or telegram which includes a reference to the bid request and addendum number.

Failure to acknowledge receipt of this addendum in one of the above methods and cause acknowledgment to be received prior to the hour and date specified for receipt of proposals, **may result in rejection of your offer.** If by virtue of this addendum you decide to change an offer already submitted, such change may be made by telegram or letter, provided such telegram or letter makes reference to the bid request number and this addendum, and is received prior to the opening hour and date specified.

For any questions related to this Addendum, contact the Project Manager, Kaleb Haile at (916) 808-7020 or KHaile@cityofsacramento.org.

Joe R. Lab

Contract Services

West Tunnel Ramps Access (T15029031)
Addendum No. 1

Item #1 The bid date has been changed to the following:

January 29, 2014 at 2:00 PM

Item #2 Contractor shall assume a 200 CY quantity for suspect soils. Suspect soils shall be stockpiled as shown in the soil management plan and paid for as part of the various items of work. Suspect soils determined by the City to be non-impacted shall be reused in the project or disposed of onsite as allowed by the Engineer and paid for under the various items of work. Suspect soils determined by the City to be impacted shall be handled as directed by the engineer and paid for as extra work.

Item #3 New Davis Bacon Wages have been issued: Dated 1/10/2014. Please see attached.

Addendum 4 - Item #3

General Decision Number: CA140009 01/10/2014 CA9

Superseded General Decision Number: CA20130009

State: California

Construction Types: Building, Heavy (Heavy and Dredging) and Highway

Counties: Alpine, Amador, Butte, Colusa, El Dorado, Glenn, Lassen, Marin, Modoc, Napa, Nevada, Placer, Plumas, Sacramento, Shasta, Sierra, Siskiyou, Solano, Sonoma, Sutter, Tehama, Trinity, Yolo and Yuba Counties in California.

BUILDING CONSTRUCTION PROJECTS (excluding Amador County only); DREDGING CONSTRUCTION PROJECTS (does not include hopper dredge work); HEAVY CONSTRUCTION PROJECTS (does not include water well drilling); AND HIGHWAY CONSTRUCTION PROJECTS

Modification Number	Publication Date
0	01/03/2014
1	01/10/2014

ASBE0016-001 08/01/2013

AREA 1: ALAMEDA, CONTRA COSTA, LAKE, MARIN, MENDOCINO, MONTEREY, NAPA, SAN BENITO, SAN FRANCISCO, SAN MATEO, SANTA CLARA, SANTA CRUZ, SOLANO, & SONOMA COUNTIES

AREA 2: ALPINE, AMADOR, BUTTE, CALAVERAS, COLUSA, DEL NORTE, EL DORADO, FRESNO, GLENN, HUMBOLDT, KINGS, LASSEN, MADERA, MARIPOSA, MERCED, MODOC, MONO, NEVADA, PLACER, PLUMAS, SACRAMENTO, SAN JOAQUIN, SHASTA, SIERRA, SISKIYOU, STANISLAU, SUTTER, TEHEMA, TRINITY, TULARE, TUOLUMNE, YOLO, & YUBA COUNTIES

	Rates	Fringes
Asbestos Workers/Insulator (Includes the application of all insulating materials, Protective Coverings, Coatings, and Finishes to all types of mechanical systems)		
Area 1	$ 57.15	18.62
Area 2	$ 44.05	18.62

ASBE0016-007 01/01/2013

	Rates	Fringes
Asbestos Removal worker/hazardous material handler (Includes preparation, wetting, stripping, removal, scrapping, vacuuming, bagging		

and disposing of all
insulation materials from
mechanical systems, whether
they contain asbestos or not)....$ 31.13 6.95

BOIL0549-002 01/01/2013

	Rates	Fringes
BOILERMAKER		
(1) Marin & Solano Counties.	$ 42.06	33.43
(2) Remaining Counties.....	$ 38.37	31.32

BRCA0003-001 06/01/2011

	Rates	Fringes
MARBLE FINISHER.....	$ 28.02	12.22

BRCA0003-004 05/01/2011

AREA 1: ALPINE, AMADOR, BUTTE, COLUSA, EL DORADO, GLENN, LASSEN, MODOC, NEVADA, PLACER, PLUMAS, SACRAMENTO, SHASTA, SIERRA, SUTTER, TEHAMA, YOLO AND YUBA COUNTIES

AREA 2: MARIN, NAPA, SISKIYOU, SOLANO, SONOMA AND TRINITY COUNTIES

	Rates	Fringes
BRICKLAYER		
AREA 1.....	$ 35.11	18.99
AREA 2.....	$ 39.85	22.00

SPECIALTY PAY:
(A) Underground work such as tunnel work, sewer work, manholes, catch basins, sewer pipes and telephone conduit shall be paid $1.25 per hour above the regular rate. Work in direct contact with raw sewage shall receive $1.25 per hour in addition to the above.
(B) Operating a saw or grinder shall receive $1.25 per hour above the regular rate.
(C) Gunite nozzle person shall receive $1.25 per hour above the regular rate.

BRCA0003-008 07/01/2013

	Rates	Fringes
TERRAZZO FINISHER.....	$ 33.15	13.93
TERRAZZO WORKER/SETTER.....	$ 39.95	24.39

BRCA0003-010 01/01/2011

	Rates	Fringes
TILE FINISHER		
Area 1.....	$ 21.21	10.01

Area 2	$ 21.26	12.44
Area 3	$ 21.44	12.31
Area 4	$ 20.93	11.79
Tile Layer		
Area 1	$ 36.08	11.95
Area 2	$ 34.41	13.68
Area 3	$ 38.61	13.73
Area 4	$ 35.45	13.68

AREA 1: Butte, Colusa, El Dorado, Glenn, Lassen, Modoc, Nevada, Placer, Plumas, Sacramento, Shasta, Sierra, Sutter, Tehema, Yolo, Yuba
AREA 2: Alpine, Amador
AREA 3: Marin, Napa, Solano, Siskiyou
AREA 4: Sonoma

BRCA0003-014 06/01/2011

	Rates	Fringes
MARBLE MASON	$ 39.22	18.68

CARP0034-001 07/01/2013

	Rates	Fringes
Diver		
Assistant Tender, ROV Tender/Technician	$ 38.60	29.78
Diver standby	$ 43.38	29.78
Diver Tender	$ 42.38	29.78
Diver wet	$ 85.91	29.78
Manifold Operator (mixed gas)	$ 47.38	29.78
Manifold Operator (Standby)	$ 42.38	29.78

DEPTH PAY (Surface Diving):
050 to 100 ft $2.00 per foot
101 to 150 ft $3.00 per foot
151 to 220 ft $4.00 per foot

SATURATION DIVING:
The standby rate shall apply until saturation starts. The saturation diving rate applies when divers are under pressure continuously until work task and decompression are complete. The diver rate shall be paid for all saturation hours.

DIVING IN ENCLOSURES:
Where it is necessary for Divers to enter pipes or tunnels, or other enclosures where there is no vertical ascent, the following premium shall be paid: Distance traveled from entrance 26 feet to 300 feet: $1.00 per foot. When it is necessary for a diver to enter any pipe, tunnel or other enclosure less than 48" in height, the premium will be $1.00 per foot.

WORK IN COMBINATION OF CLASSIFICATIONS:
Employees working in any combination of classifications

within the diving crew (except dive supervisor) in a shift are paid in the classification with the highest rate for that shift.

CARP0034-003 07/01/2013

	Rates	Fringes
Piledriver	$ 38.60	29.78

CARP0035-001 08/01/2013

AREA 1: MARIN, NAPA, SOLANO & SONOMA

AREA 3: SACRAMENTO, WESTERN EL DORADO (Territory west of an including highway 49 and the territory inside the city limits of Placerville), WESTERN PLACER (Territory west of and including highway 49), & YOLO

AREA 4: ALPINE, BUTTE, COLUSA, EASTERN EL DORADO, GLENN, LASSEN, MODOC, NEVADA, EASTERN PLACER, PLUMAS, SHASTA, SIERRA, SISKIYOU, SUTTER, TEHAMA, TRINITY, & YUBA

	Rates	Fringes
Drywall Installers/Lathers:		
Area 1	$ 39.35	27.02
Area 3	$ 33.97	27.02
Area 4	$ 32.62	27.02
Drywall Stocker/Scrapper		
Area 1	$ 19.68	15.65
Area 3	$ 16.99	15.65
Area 4	$ 16.31	15.65

CARP0035-009 07/01/2013

Marin County

	Rates	Fringes
CARPENTER		
Bridge Builder/Highway Carpenter	$ 39.35	26.58
Hardwood Floorlayer, Shingler, Power Saw Operator, Steel Scaffold & Steel Shoring Erector, Saw Filer	$ 39.50	26.58
Journeyman Carpenter	$ 39.35	26.58
Millwright	$ 39.45	28.17

CARP0035-010 07/01/2013

AREA 1: Marin, Napa, Solano & Sonoma Counties

AREA 2: Alpine, San Benito and Santa Cruz

AREA 3: Alpine, Butte, Colusa, El Dorado, Glenn, Lassen, Modoc,

Nevada, Placer, Plumas, Sacramento, Shasta, Sierra, Siskiyou, Sutter, Tehama, Trinity, Yolo & Yuba counties

	Rates	Fringes
Modular Furniture Installer		
Area 1		
Installer I	$ 22.96	17.52
Installer II	$ 19.53	17.52
Lead Installer	$ 26.41	18.02
Master Installer	$ 30.63	18.02
Area 2		
Installer I	$ 20.31	17.52
Installer II	$ 17.36	17.52
Lead Installer	$ 23.28	18.02
Master Installer	$ 26.91	18.02
Area 3		
Installer I	$ 19.36	17.52
Installer II	$ 16.59	17.52
Lead Installer	$ 22.16	18.02
Master Installer	$ 25.58	18.02

CARP0046-001 07/01/2013

El Dorado (West), Placer (West), Sacramento and Yolo Counties

	Rates	Fringes
Carpenters		
Bridge Builder/Highway Carpenter	$ 39.35	26.58
Hardwood Floorlayer, Shingler, Power Saw Operator, Steel Scaffold & Steel Shoring Erector, Saw Filer	$ 33.62	26.58
Journeyman Carpenter	$ 33.47	26.58
Millwright	$ 35.97	28.17

Footnote: Placer County (West) includes territory West of and including Highway 49 and El Dorado County (West) includes territory West of and including Highway 49 and territory inside the city limits of Placerville.

CARP0046-002 07/01/2013

Alpine, Colusa, El Dorado (East), Nevada, Placer (East), Sierra, Sutter and Yuba Counties

	Rates	Fringes
Carpenters		
Bridge Builder/Highway Carpenter	$ 39.35	26.58
Hardwood Floorlayer, Shingler, Power Saw Operator, Steel Scaffold &		

Steel Shoring Erector, Saw Filer	$ 32.27	26.58
Journeyman Carpenter	$ 32.12	26.58
Millwright	$ 34.62	28.17

CARP0152-003 07/01/2013

Amador County

	Rates	Fringes
Carpenters		
Bridge Builder/Highway Carpenter	$ 39.35	26.58
Hardwood Floorlayer, Shingler, Power Saw Operator, Steel Scaffold & Steel Shoring Erector, Saw Filer	$ 32.27	26.58
Journeyman Carpenter	$ 32.12	26.58
Millwright	$ 34.62	28.17

CARP0180-001 07/01/2013

Solano County

	Rates	Fringes
Carpenters		
Bridge Builder/Highway Carpenter	$ 39.35	26.58
Hardwood Floorlayer, Shingler, Power Saw Operator, Steel Scaffold & Steel Shoring Erector, Saw Filer	$ 39.50	26.58
Journeyman Carpenter	$ 39.35	26.58
Millwright	$ 39.45	28.17

CARP0751-001 07/01/2013

Napa and Sonoma Counties

	Rates	Fringes
Carpenters		
Bridge Builder/Highway Carpenter	$ 39.35	26.58
Hardwood Floorlayer, Shingler, Power Saw Operator, Steel Scaffold & Steel Shoring Erector, Saw Filer	$ 39.50	26.58
Journeyman Carpenter	$ 39.35	26.58
Millwright	$ 39.45	28.17

CARP1599-001 07/01/2013

Butte, Glenn, Lassen, Modoc, Plumas, Shasta, Siskiyou, Tehama and Trinity Counties

	Rates	Fringes
Carpenters		
Bridge Builder/Highway Carpenter	$ 39.35	26.58
Hardwood Floorlayer, Shingler, Power Saw Operator, Steel Scaffold & Steel Shoring Erector, Saw Filer	$ 32.27	26.58
Journeyman Carpenter	$ 32.12	26.58
Millwright	$ 34.62	28.17

ELEC0180-001 06/01/2013

NAPA AND SOLANO COUNTIES

	Rates	Fringes
CABLE SPLICER	$ 49.29	21.609
ELECTRICIAN	$ 43.81	21.444

ELEC0180-003 12/01/2013

NAPA AND SOLANO COUNTIES

	Rates	Fringes
Sound & Communications		
Installer	$ 31.32	3%+15.30
Technician	$ 35.66	3%+15.30

SCOPE OF WORK INCLUDES-
SOUND & VOICE TRANSMISSION (Music, Intercom, Nurse Call, Telephone); FIRE ALARM SYSTEMS [excluding fire alarm work when installed in raceways (including wire and cable pulling) and when performed on new or major remodel building projects or jobs], TELEVISION & VIDEO SYSTEMS, SECURITY SYSTEMS, COMMUNICATIONS SYSTEMS that transmit or receive information and/or control systems that are intrinsic to the above.

EXCLUDES-
Excludes all other data systems or multiple systems which include control function or power supply; excludes installation of raceway systems, line voltage work, industrial work, life-safety systems (all buildings having floors located more than 75' above the lowest floor level having building access); excludes energy management systems.

ELEC0340-002 12/01/2013

ALPINE, AMADOR, BUTTE, COLUSA, EL DORADO, GLENN, LASSEN, NEVADA, PLACER, PLUMAS, SACRAMENTO, TRINITY, YOLO, YUBA COUNTIES

	Rates	Fringes
Communications System		
Sound & Communications Installer	$ 24.68	3%+12.85
Sound & Communications Technician	$ 28.38	3%+12.85

SCOPE OF WORK

Includes the installation testing, service and maintenance, of the following systems which utilize the transmission and/or transference of voice, sound, vision and digital for commercial, education, security and entertainment purposes for the following TV monitoring and surveillance, background-foreground music, intercom and telephone interconnect, inventory control systems, microwave transmission, multi-media, multiplex, nurse call system, radio page, school intercom and sound, burglar alarms, and low voltage master clock systems.

A. SOUND AND VOICE TRANSMISSION/TRANSFERENCE SYSTEMS
Background foreground music Intercom and telephone interconnect systems, Telephone systems, Nurse call systems, Radio page systems, School intercom and sound systems, Burglar alarm systems, Low voltage master clock systems, Multi-media/multiplex systems, Sound and musical entertainment systems, RF systems, Antennas and Wave Guide.

B. FIRE ALARM SYSTEMS
Installation, wire pulling and testing

C. TELEVISION AND VIDEO SYSTEMS Television monitoring and surveillance systems, Video security systems, Video entertainment systems, Video educational systems, Microwave transmission systems, CATV and CCTV

D. SECURITY SYSTEMS Perimeter security systems Vibration sensor systems Card access systems Access control systems Sonar/infrared monitoring equipment

E. COMMUNICATIONS SYSTEMS THAT TRANSMIT OR RECEIVE INFORMATION AND/OR CONTROL SYSTEMS THAT ARE INTRINSIC TO THE ABOVE LISTED SYSTEMS SCADA (Supervisory Control and Data Acquisition) PCM (Pulse Code Modulation) Inventory Control Systems Digital Data Systems Broadband and Baseband and Carriers Point of Sale Systems VSAT Data Systems Data Communication Systems RF and Remote Control Systems Fiber Optic Data Systems WORK EXCLUDED Raceway systems are not covered (excluding Ladder-Rack for the purpose of the above listed systems). Chases and/or nipples (not to exceed 10 feet) may be installed on open wiring systems. Energy management systems. SCADA (Supervisory Control and Data Acquisition) when not intrinsic to the above listed systems (in the scope). Fire alarm systems when installed in raceways (including wire and cable pulling) shall be performed at the electrician wage rate, when either of the following two (2) conditions apply:
1. The project involves new or major remodel building trades

construction.
2. The conductors for the fire alarm system are installed in conduit.

ELEC0340-003 12/01/2013

ALPINE (West of Sierra Mt. Watershed), AMADOR, BUTTE, COLUSA, EL DORADO (West of Sierra Mt. Watershed), GLENN, LASSEN, NEVADA (West of Sierra Mt. Watershed), PLACER, PLUMAS, SACRAMENTO, SHASTA, SIERRA (West of Sierra Mt. Watershed), SUTTER, TEHAMA, TRINITY, YOLO & YUBA COUNTIES

	Rates	Fringes
ELECTRICIAN		
Remaining area	$ 39.06	18.54
Sierra Army Depot, Herlong	$ 48.83	18.54
Tunnel work	$ 41.01	18.54

CABLE SPLICER: Receives 110% of the Electrician basic hourly rate.

ELEC0401-005 07/01/2013

ALPINE (east of the main watershed divide), EL DORADO (east of the main watershed divide), NEVADA (east of the main watershed), PLACER (east of the main watershed divide) and SIERRA (east of the main watershed divide) COUNTIES:

	Rates	Fringes
ELECTRICIAN	$ 37.00	14.62

ELEC0551-004 06/01/2013

MARIN AND SONOMA COUNTIES

	Rates	Fringes
ELECTRICIAN	$ 46.70	15.21

ELEC0551-005 12/01/2013

MARIN & SONOMA COUNTIES

	Rates	Fringes
Sound & Communications		
Installer	$ 31.32	16.23
Technician	$ 35.66	16.36

SCOPE OF WORK INCLUDES-
SOUND & VOICE TRANSMISSION (Music, Intercom, Nurse Call, Telephone); FIRE ALARM SYSTEMS [excluding fire alarm work when installed in raceways (including wire and cable pulling) and when performed on new or major remodel

building projects or jobs],
TELEVISION & VIDEO SYSTEMS, SECURITY SYSTEMS, COMMUNICATIONS SYSTEMS that transmit or receive information and/or control systems that are intrinsic to the above.

EXCLUDES-
Excludes all other data systems or multiple systems which include control function or power supply; excludes installation of raceway systems, line voltage work, industrial work, life-safety systems (all buildings having floors located more than 75' above the lowest floor level having building access); excludes energy management systems.

ELEC0659-006 01/01/2013

DEL NORTE, MODOC and SISKIYOU COUNTIES

	Rates	Fringes
ELECTRICIAN	$ 30.27	14.81

ELEC0659-008 02/01/2013

DEL NORTE, MODOC & SISKIYOU COUNTIES

	Rates	Fringes
Line Construction		
(1) Cable Splicer	$ 51.09	4%+13.30
(2) Lineman, Pole Sprayer, Heavy Line Equipment Man	$ 45.62	4%+13.30
(3) Tree Trimmer	$ 32.07	4%+9.80
(4) Line Equipment Man	$ 45.62	4%+9.80
(5) Powdermen, Jackhammermen	$ 34.22	4%+9.80
(6) Groundman	$ 31.31	4%+9.80

ELEC1245-004 06/01/2013

ALL COUNTIES EXCEPT DEL NORTE, MODOC & SISKIYOU

	Rates	Fringes
LINE CONSTRUCTION		
(1) Lineman; Cable splicer	$ 50.30	15
(2) Equipment specialist (operates crawler tractors, commercial motor vehicles, backhoes, trenchers, cranes (50 tons and below), overhead & underground distribution line equipment)	$ 40.17	14.56
(3) Groundman	$ 30.73	13.48
(4) Powderman	$ 44.91	13.48

HOLIDAYS: New Year's Day, M.L. King Day, Memorial Day, Independence Day, Labor Day, Veterans Day, Thanksgiving Day

and day after Thanksgiving, Christmas Day

ELEV0008-001 01/01/2013

	Rates	Fringes
ELEVATOR MECHANIC	$ 58.07	25.185

FOOTNOTE:
PAID VACATION: Employer contributes 8% of regular hourly rate as vacation pay credit for employees with more than 5 years of service, and 6% for 6 months to 5 years of service.
PAID HOLIDAYS: New Years Day, Memorial Day, Independence Day, Labor Day, Veterans Day, Thanksgiving Day, Friday after Thanksgiving, and Christmas Day.

ENGI0003-008 07/01/2013

	Rates	Fringes
Dredging: (DREDGING: CLAMSHELL & DIPPER DREDGING; HYDRAULIC SUCTION DREDGING:)		
AREA 1:		
(1) Leverman	$ 40.53	27.81
(2) Dredge Dozer; Heavy duty repairman	$ 35.57	27.81
(3) Booster Pump Operator; Deck Engineer; Deck mate; Dredge Tender; Winch Operator	$ 34.45	27.81
(4) Bargeman; Deckhand; Fireman; Leveehand; Oiler	$ 31.15	27.81
AREA 2:		
(1) Leverman	$ 42.53	27.81
(2) Dredge Dozer; Heavy duty repairman	$ 37.57	27.81
(3) Booster Pump Operator; Deck Engineer; Deck mate; Dredge Tender; Winch Operator	$ 36.45	27.81
(4) Bargeman; Deckhand; Fireman; Leveehand; Oiler	$ 33.15	27.81

AREA DESCRIPTIONS

AREA 1: ALAMEDA,BUTTE, CONTRA COSTA, KINGS, MARIN, MERCED, NAPA, SACRAMENTO, SAN BENITO, SAN FRANCISCO, SAN JOAQUIN, SAN MATEO, SANTA CLARA, SANTA CRUZ, SOLANO, STANISLAUS, SUTTER, YOLO, AND YUBA COUNTIES

AREA 2: MODOC COUNTY

THE REMAINGING COUNTIES ARE SPLIT BETWEEN AREA 1 AND AREA 2 AS NOTED BELOW:

ALPINE COUNTY:
Area 1: Northernmost part
Area 2: Remainder

CALAVERAS COUNTY:
Area 1: Remainder
Area 2: Eastern part

COLUSA COUNTY:
Area 1: Eastern part
Area 2: Remainder

ELDORADO COUNTY:
Area 1: North Central part
Area 2: Remainder

FRESNO COUNTY:
Area 1: Remainder
Area 2: Eastern part

GLENN COUNTY:
Area 1: Eastern part
Area 2: Remainder

LASSEN COUNTY:
Area 1: Western part along the Southern portion of border with Shasta County
Area 2: Remainder

MADERA COUNTY:
Area 1: Except Eastern part
Area 2: Eastern part

MARIPOSA COUNTY
Area 1: Except Eastern part
Area 2: Eastern part

MONTERREY COUNTY
Area 1: Except Southwestern part
Area 2: Southwestern part

NEVADA COUNTY:
Area 1: All but the Northern portion along the border of Sierra County
Area 2: Remainder

PLACER COUNTY:
Area 1: Al but the Central portion
Area 2: Remainder

PLUMAS COUNTY:
Area 1: Western portion
Area 2: Remainder

SHASTA COUNTY:
Area 1: All but the Northeastern corner
Area 2: Remainder

SIERRA COUNTY:
Area 1: Western part

Area 2: Remainder

SISKIYOU COUNTY:
Area 1: Central part
Area 2: Remainder

SONOMA COUNTY:
Area 1: All but the Northwestern corner
Area 2: Remainder

TEHAMA COUNTY:
Area 1: All but the Western border with Mendocino & Trinity Counties
Area 2: Remainder

TRINITY COUNTY:
Area 1: East Central part and the Northeastern border with Shasta County
Area 2: Remainder

TUOLUMNE COUNTY:
Area 1: Except Eastern part
Area 2: Eastern part

ENGI0003-018 07/01/2013

"AREA 1" WAGE RATES ARE LISTED BELOW

"AREA 2" RECEIVES AN ADDITIONAL $2.00 PER HOUR ABOVE AREA 1 RATES.

SEE AREA DEFINITIONS BELOW

	Rates	Fringes
OPERATOR: Power Equipment (AREA 1:)		
GROUP 1	$ 39.02	26.27
GROUP 2	$ 37.49	26.27
GROUP 3	$ 36.01	26.27
GROUP 4	$ 34.63	26.27
GROUP 5	$ 33.36	26.27
GROUP 6	$ 32.04	26.27
GROUP 7	$ 30.90	26.27
GROUP 8	$ 29.76	26.27
GROUP 8-A	$ 27.55	26.27
OPERATOR: Power Equipment (Cranes and Attachments - AREA 1:)		
GROUP 1		
Cranes	$ 39.90	26.27
Oiler	$ 32.93	26.27
Truck crane oiler	$ 36.50	26.27
GROUP 2		
Cranes	$ 32.67	26.27
Oiler	$ 32.67	26.27
Truck crane oiler	$ 36.21	26.27
GROUP 3		

Cranes.....$ 36.40 26.27
Hydraulic.....$ 32.04 26.27
Oiler.....$ 32.43 26.27
Truck Crane Oiler.....$ 35.94 26.27

OPERATOR: Power Equipment
(Piledriving - AREA 1:)

GROUP 1
Lifting devices.....$ 40.24 26.27
Oiler.....$ 30.98 26.27
Truck crane oiler.....$ 33.26 26.27

GROUP 2
Lifting devices.....$ 38.42 26.27
Oiler.....$ 30.71 26.27
Truck Crane Oiler.....$ 33.01 26.27

GROUP 3
Lifting devices.....$ 36.74 26.27
Oiler.....$ 30.49 26.27
Truck Crane Oiler.....$ 32.72 26.27

GROUP 4
Lifting devices.....$ 34.97 26.27

GROUP 5
Lifting devices.....$ 33.67 26.27

GROUP 6
Lifting devices.....$ 32.33 26.27

OPERATOR: Power Equipment
(Steel Erection - AREA 1:)

GROUP 1
Cranes.....$ 40.87 26.27
Oiler.....$ 31.32 26.27
Truck Crane Oiler.....$ 33.55 26.27

GROUP 2
Cranes.....$ 39.10 26.27
Oiler.....$ 31.05 26.27
Truck Crane Oiler.....$ 33.33 26.27

GROUP 3
Cranes.....$ 37.62 26.27
Hydraulic.....$ 32.67 26.27
Oiler.....$ 30.83 26.27
Truck Crane Oiler.....$ 33.06 26.27

GROUP 4
Cranes.....$ 35.60 26.27

GROUP 5
Cranes.....$ 34.30 26.27

OPERATOR: Power Equipment
(Tunnel and Underground Work
- AREA 1:)

SHAFTS, STOPES, RAISES:
GROUP 1.....$ 35.12 26.27
GROUP 1-A.....$ 37.59 26.27
GROUP 2.....$ 33.86 26.27
GROUP 3.....$ 32.53 26.27
GROUP 4.....$ 31.39 26.27
GROUP 5.....$ 30.25 26.27

UNDERGROUND:
GROUP 1.....$ 35.02 26.27
GROUP 1-A.....$ 37.49 26.27
GROUP 2.....$ 33.76 26.27
GROUP 3.....$ 32.43 26.27
GROUP 4.....$ 31.29 26.27
GROUP 5.....$ 30.15 26.27

FOOTNOTE: Work suspended by ropes or cables, or work on a Yo-Yo Cat: $.60 per hour additional.

POWER EQUIPMENT OPERATOR CLASSIFICATIONS

GROUP 1: Operator of helicopter (when used in erection work); Hydraulic excavator, 7 cu. yds. and over; Power shovels, over 7 cu. yds.

GROUP 2: Highline cableway; Hydraulic excavator, 3-1/2 cu. yds. up to 7 cu. yds.; Licensed construction work boat operator, on site; Power blade operator (finish); Power shovels, over 1 cu. yd. up to and including 7 cu. yds. m.r.c.

GROUP 3: Asphalt milling machine; Cable backhoe; Combination backhoe and loader over 3/4 cu. yds.; Continuous flight tie back machine assistant to engineer or mechanic; Crane mounted continuous flight tie back machine, tonnage to apply; Crane mounted drill attachment, tonnage to apply; Dozer, slope brd; Gradall; Hydraulic excavator, up to 3 1/2 cu. yds.; Loader 4 cu. yds. and over; Long reach excavator; Multiple engine scraper (when used as push pull); Power shovels, up to and including 1 cu. yd.; Pre-stress wire wrapping machine; Side boom cat, 572 or larger; Track loader 4 cu. yds. and over; Wheel excavator (up to and including 750 cu. yds. per hour)

GROUP 4: Asphalt plant engineer/box person; Chicago boom; Combination backhoe and loader up to and including 3/4 cu. yd.; Concrete batch plant (wet or dry); Dozer and/or push cat; Pull- type elevating loader; Gradesetter, grade checker (GPS, mechanical or otherwise); Grooving and grinding machine; Heading shield operator; Heavy-duty drilling equipment, Hughes, LDH, Watson 3000 or similar; Heavy-duty repairperson and/or welder; Lime spreader; Loader under 4 cu. yds.; Lubrication and service engineer (mobile and grease rack); Mechanical finishers or spreader machine (asphalt, Barber-Greene and similar); Miller Formless M-9000 slope paver or similar; Portable crushing and screening plants; Power blade support; Roller operator, asphalt; Rubber-tired scraper, self-loading (paddle-wheels, etc.); Rubber- tired earthmoving equipment (scrapers); Slip form paver (concrete); Small tractor with drag; Soil stabilizer (P & H or equal); Spider plow and spider puller; Tubex pile rig; Unlicensed constuction work boat operator, on site; Timber skidder; Track loader up to 4 yds.; Tractor-drawn scraper; Tractor, compressor drill combination; Welder; Woods-Mixer (and other similar Pugmill equipment)

GROUP 5: Cast-in-place pipe laying machine; Combination slusher and motor operator; Concrete conveyor or concrete pump, truck or equipment mounted; Concrete conveyor, building site; Concrete pump or pumpcrete gun; Drilling equipment, Watson 2000, Texoma 700 or similar; Drilling and boring machinery, horizontal (not to apply to waterliners, wagon drills or jackhammers); Concrete mixer/all; Person

and/or material hoist; Mechanical finishers (concrete) (Clary, Johnson, Bidwell Bridge Deck or similar types); Mechanical burm, curb and/or curb and gutter machine, concrete or asphalt); Mine or shaft hoist; Portable crusher; Power jumbo operator (setting slip-forms, etc., in tunnels); Screed (automatic or manual); Self-propelled compactor with dozer; Tractor with boom D6 or smaller; Trenching machine, maximum digging capacity over 5 ft. depth; Vermeer T-600B rock cutter or similar

GROUP 6: Armor-Coater (or similar); Ballast jack tamper; Boom- type backfilling machine; Assistant plant engineer; Bridge and/or gantry crane; Chemical grouting machine, truck-mounted; Chip spreading machine operator; Concrete saw (self-propelled unit on streets, highways, airports and canals); Deck engineer; Drilling equipment Texoma 600, Hughes 200 Series or similar up to and including 30 ft. m.r.c.; Drill doctor; Helicopter radio operator; Hydro-hammer or similar; Line master; Skidsteer loader, Bobcat larger than 743 series or similar (with attachments); Locomotive; Lull hi-lift or similar; Oiler, truck mounted equipment; Pavement breaker, truck-mounted, with compressor combination; Paving fabric installation and/or laying machine; Pipe bending machine (pipelines only); Pipe wrapping machine (tractor propelled and supported); Screed (except asphaltic concrete paving); Self- propelled pipeline wrapping machine; Tractor; Self-loading chipper; Concrete barrier moving machine

GROUP 7: Ballast regulator; Boom truck or dual-purpose A-frame truck, non-rotating - under 15 tons; Truck-mounted rotating telescopic boom type lifting device, Manitex or similar (boom truck) - under 15 tons; Cary lift or similar; Combination slurry mixer and/or cleaner; Drilling equipment, 20 ft. and under m.r.c.; Firetender (hot plant); Grouting machine operator; Highline cableway signalperson; Stationary belt loader (Kolman or similar); Lift slab machine (Vagtborg and similar types); Maginnes internal full slab vibrator; Material hoist (1 drum); Mechanical trench shield; Pavement breaker with or without compressor combination); Pipe cleaning machine (tractor propelled and supported); Post driver; Roller (except asphalt); Chip Seal; Self-propelled automatically applied concrete curing mahcine (on streets, highways, airports and canals); Self-propelled compactor (without dozer); Signalperson; Slip-form pumps (lifting device for concrete forms); Tie spacer; Tower mobile; Trenching machine, maximum digging capacity up to and including 5 ft. depth; Truck- type loader

GROUP 8: Bit sharpener; Boiler tender; Box operator; Brakeperson; Combination mixer and compressor (shotcrete/gunite); Compressor operator; Deckhand; Fire tender; Forklift (under 20 ft.); Generator; Gunite/shotcrete equipment operator; Hydraulic monitor; Ken seal machine (or similar); Mixermobile; Oiler; Pump operator; Refrigeration plant; Reservoir-debris tug (self-propelled floating); Ross Carrier (construction site); Rotomist operator; Self-propelled tape machine; Shuttlecar; Self-propelled power sweeper operator (includes vacuum sweeper); Slusher operator; Surface heater; Switchperson;

Tar pot firetender; Tugger hoist, single drum; Vacuum cooling plant; Welding machine (powered other than by electricity)

GROUP 8-A: Elevator operator; Skidsteer loader-Bobcat 743 series or smaller, and similar (without attachments); Mini excavator under 25 H.P. (backhoe-trencher); Tub grinder wood chipper

---

ALL CRANES AND ATTACHMENTS

GROUP 1: Clamshell and dragline over 7 cu. yds.; Crane, over 100 tons; Derrick, over 100 tons; Derrick barge pedestal-mounted, over 100 tons; Self-propelled boom-type lifting device, over 100 tons

GROUP 2: Clamshell and dragline over 1 cu. yd. up to and including 7 cu. yds.; Crane, over 45 tons up to and including 100 tons; Derrick barge, 100 tons and under; Self-propelled boom-type lifting device, over 45 tons; Tower crane

GROUP 3: Clamshell and dragline up to and including 1 cu. yd.; Cranes 45 tons and under; Self-propelled boom-type lifting device 45 tons and under; Boom Truck or dual purpose A-frame truck, non-rotating over 15 tons; Truck-mounted rotating telescopic boom type lifting device, Manitex or similar (boom truck) over 15 tons;

PILEDRIVERS

GROUP 1: Derrick barge pedestal mounted over 100 tons; Clamshell over 7 cu. yds.; Self-propelled boom-type lifting device over 100 tons; Truck crane or crawler, land or barge mounted over 100 tons

GROUP 2: Derrick barge pedestal mounted 45 tons to and including 100 tons; Clamshell up to and including 7 cu. yds.; Self-propelled boom-type lifting device over 45 tons; Truck crane or crawler, land or barge mounted, over 45 tons up to and including 100 tons; Fundex F-12 hydraulic pile rig

GROUP 3: Derrick barge pedestal mounted under 45 tons; Self-propelled boom-type lifting device 45 tons and under; Skid/scow piledriver, any tonnage; Truck crane or crawler, land or barge mounted 45 tons and under

GROUP 4: Assistant operator in lieu of assistant to engineer; Forklift, 10 tons and over; Heavy-duty repairperson/welder

GROUP 5: Deck engineer

GROUP 6: Deckhand; Fire tender

STEEL ERECTORS

GROUP 1: Crane over 100 tons; Derrick over 100 tons; Self-propelled boom-type lifting device over 100 tons

GROUP 2: Crane over 45 tons to 100 tons; Derrick under 100 tons; Self-propelled boom-type lifting device over 45 tons to 100 tons; Tower crane

GROUP 3: Crane, 45 tons and under; Self-propelled boom-type lifting device, 45 tons and under

GROUP 4: Chicago boom; Forklift, 10 tons and over; Heavy-duty repair person/welder

GROUP 5: Boom cat

TUNNEL AND UNDERGROUND WORK

GROUP 1-A: Tunnel bore machine operator, 20' diameter or more

GROUP 1: Heading shield operator; Heavy-duty repairperson; Mucking machine (rubber tired, rail or track type); Raised bore operator (tunnels); Tunnel mole bore operator

GROUP 2: Combination slusher and motor operator; Concrete pump or pumpcrete gun; Power jumbo operator

GROUP 3: Drill doctor; Mine or shaft hoist

GROUP 4: Combination slurry mixer cleaner; Grouting Machine operator; Motorman

GROUP 5: Bit Sharpener; Brakeman; Combination mixer and compressor (gunite); Compressor operator; Oiler; Pump operator; Slusher operator

---

AREA DESCRIPTIONS:

POWER EQUIPMENT OPERATORS, CRANES AND ATTACHMENTS,TUNNEL AND UNDERGROUND [These areas do not apply to Piledrivers and Steel Erectors]

AREA 1: ALAMEDA, BUTTE, CONTRA COSTA, KINGS, MARIN, MERCED, NAPA, SACRAMENTO, SAN BENITO, SAN FRANCISCO, SAN JOAQUIN, SAN MATEO, SANTA CLARA, SANTA CRUZ, SOLANO, STANISLAUS, SUTTER, YOLO, AND YUBA COUNTIES

AREA 2 - MODOC COUNTY

THE REMAINING COUNTIES ARE SPLIT BETWEEN AREA 1 AND AREA 2 AS NOTED BELOW:

ALPINE COUNTY:
Area 1: Northernmost part

Area 2: Remainder

CALAVERAS COUNTY:
Area 1: Except Eastern part
Area 2: Eastern part

COLUSA COUNTY:
Area 1: Eastern part
Area 2: Remainder

DEL NORTE COUNTY:
Area 1: Extreme Southwestern corner
Area 2: Remainder

ELDORADO COUNTY:
Area 1: North Central part
Area 2: Remainder

FRESNO COUNTY
Area 1: Except Eastern part
Area 2: Eastern part

GLENN COUNTY:
Area 1: Eastern part
Area 2: Remainder

HUMBOLDT COUNTY:
Area 1: Except Eastern and Southwestern parts
Area 2: Remainder

LAKE COUNTY:
Area 1: Southern part
Area 2: Remainder

LASSEN COUNTY:
Area 1: Western part along the Southern portion of border with Shasta County
Area 2: Remainder

MADERA COUNTY
Area 1: Remainder
Area 2: Eastern part

MARIPOSA COUNTY
Area 1: Remainder
Area 2: Eastern part

MENDOCINO COUNTY:
Area 1: Central and Southeastern parts
Area 2: Remainder

MONTEREY COUNTY
Area 1: Remainder
Area 2: Southwestern part

NEVADA COUNTY:
Area 1: All but the Northern portion along the border of Sierra County
Area 2: Remainder

PLACER COUNTY:
Area 1: All but the Central portion
Area 2: Remainder

PLUMAS COUNTY:
Area 1: Western portion
Area 2: Remainder

SHASTA COUNTY:
Area 1: All but the Northeastern corner
Area 2: Remainder

SIERRA COUNTY:
Area 1: Western part
Area 2: Remainder

SISKIYOU COUNTY:
Area 1: Central part
Area 2: Remainder

SONOMA COUNTY:
Area 1: All but the Northwestern corner
Area 2: Reaminder

TEHAMA COUNTY:
Area 1: All but the Western border with mendocino & Trinity Counties
Area 2: Remainder

TRINITY COUNTY:
Area 1: East Central part and the Northeaster border with Shasta County
Area 2: Remainder

TULARE COUNTY;
Area 1: Remainder
Area 2: Eastern part

TUOLUMNE COUNTY:
Area 1: Remainder
Area 2: Eastern Part

ENGI0003-019 06/25/2012

SEE AREA DESCRIPTIONS BELOW

	Rates	Fringes
OPERATOR: Power Equipment (LANDSCAPE WORK ONLY)		
GROUP 1		
AREA 1	$ 28.64	23.75
AREA 2	$ 30.64	23.75
GROUP 2		
AREA 1	$ 25.04	23.75
AREA 2	$ 27.04	23.75
GROUP 3		
AREA 1	$ 20.43	23.75
AREA 2	$ 22.43	23.75

GROUP DESCRIPTIONS:

GROUP 1: Landscape Finish Grade Operator: All finish grade work regardless of equipment used, and all equipment with a rating more than 65 HP.

GROUP 2: Landscape Operator up to 65 HP: All equipment with a manufacturer's rating of 65 HP or less except equipment covered by Group 1 or Group 3. The following equipment shall be included except when used for finish work as long as manufacturer's rating is 65 HP or less: A-Frame and Winch Truck, Backhoe, Forklift, Hydragraphic Seeder Machine, Roller, Rubber-Tired and Track Earthmoving Equipment, Skiploader, Straw Blowers, and Trencher 31 HP up to 65 HP.

GROUP 3: Landscae Utility Operator: Small Rubber-Tired Tractor, Trencher Under 31 HP.

AREA DESCRIPTIONS:

AREA 1: ALAMEDA, BUTTE, CONTRA COSTA, KINGS, MARIN, MERCED, NAPA, SACRAMENTO, SAN BENITO, SAN FRANCISCO, SAN JOAQUIN, SAN MATEO, SANTA CLARA, SANTA CRUZ, SOLANO, STANISLAUS, SUTTER, YOLO, AND YUBA COUNTIES

AREA 2 - MODOC COUNTY

THE REMAINING COUNTIES ARE SPLIT BETWEEN AREA 1 AND AREA 2 AS NOTED BELOW:

ALPINE COUNTY:
Area 1: Northernmost part
Area 2: Remainder

CALAVERAS COUNTY:
Area 1: Except Eastern part
Area 2: Eastern part

COLUSA COUNTY:
Area 1: Eastern part
Area 2: Remainder

DEL NORTE COUNTY:
Area 1: Extreme Southwestern corner
Area 2: Remainder

ELDORADO COUNTY:
Area 1: North Central part
Area 2: Remainder

FRESNO COUNTY
Area 1: Except Eastern part
Area 2: Eastern part

GLENN COUNTY:
Area 1: Eastern part
Area 2: Remainder

HUMBOLDT COUNTY:
Area 1: Except Eastern and Southwestern parts
Area 2: Remainder

LAKE COUNTY:
Area 1: Southern part
Area 2: Remainder

LASSEN COUNTY:
Area 1: Western part along the Southern portion of border with Shasta County
Area 2: Remainder

MADERA COUNTY
Area 1: Remainder
Area 2: Eastern part

MARIPOSA COUNTY
Area 1: Remainder
Area 2: Eastern part

MENDOCINO COUNTY:
Area 1: Central and Southeastern parts
Area 2: Remainder

MONTEREY COUNTY
Area 1: Remainder
Area 2: Southwestern part

NEVADA COUNTY:
Area 1: All but the Northern portion along the border of Sierra County
Area 2: Remainder

PLACER COUNTY:
Area 1: All but the Central portion
Area 2: Remainder

PLUMAS COUNTY:
Area 1: Western portion
Area 2: Remainder

SHASTA COUNTY:
Area 1: All but the Northeastern corner
Area 2: Remainder

SIERRA COUNTY:
Area 1: Western part
Area 2: Remainder

SISKIYOU COUNTY:
Area 1: Central part
Area 2: Remainder

SONOMA COUNTY:
Area 1: All but the Northwestern corner
Area 2: Reaminder

TEHAMA COUNTY:
Area 1: All but the Western border with mendocino & Trinity

Counties
Area 2: Remainder

TRINITY COUNTY:
Area 1: East Central part and the Northeaster border with Shasta County
Area 2: Remainder

TULARE COUNTY;
Area 1: Remainder
Area 2: Eastern part

TUOLUMNE COUNTY:
Area 1: Remainder
Area 2: Eastern Part

IRON0377-002 07/01/2013

	Rates	Fringes
Ironworkers:		
Fence Erector	$ 26.58	17.74
Ornamental, Reinforcing and Structural	$ 33.00	26.30

PREMIUM PAY:

$6.00 additional per hour at the following locations:

China Lake Naval Test Station, Chocolate Mountains Naval Reserve-Niland,
Edwards AFB, Fort Irwin Military Station, Fort Irwin Training Center-Goldstone, San Clemente Island, San Nicholas Island, Susanville Federal Prison, 29 Palms - Marine Corps, U.S. Marine Base - Barstow, U.S. Naval Air Facility - Sealey, Vandenberg AFB

$4.00 additional per hour at the following locations:

Army Defense Language Institute - Monterey, Fallon Air Base, Naval Post Graduate School - Monterey, Yermo Marine Corps Logistics Center

$2.00 additional per hour at the following locations:

Port Hueneme, Port Mugu, U.S. Coast Guard Station - Two Rock

LABO0067-002 12/01/2012

AREA "A" - ALAMEDA, CONTRA COSTA, MARIN, SAN FRANCISCO, SAN MATEO AND SANTA CLARA COUNTIES

AREA "B" - ALPINE, AMADOR, BUTTE, CALAVERAS, COLUSA, DEL NORTE, EL DORADO, FRESNO, GLENN, HUMBOLDT, KINGS, LAKE, LASSEN, MADERA, MARIPOSA, MENDOCINO, MERCED, MODOC, MONTEREY, NAPA, NEVADA, PLACER, PLUMAS, SACRAMENTO, SAN BENITO, SAN JOAQUIN, SANTA CRUZ, SHASTA, SIERRA, SISKIYOU, SOLANO, SONOMA, STANISLAUS, SUTTER, TEHAMA, TRINITY, TULARE, TUOLUMNE, YOLO AND

YUBA COUNTIES

	Rates	Fringes
Asbestos Removal Laborer		
Areas A & B	$ 19.06	8.62
LABORER (Lead Removal)		
Area A	$ 36.25	9.19
Area B	$ 35.25	9.19

ASBESTOS REMOVAL-SCOPE OF WORK: Site mobilization; initial site clean-up; site preparation; removal of asbestos-containing materials from walls and ceilings; or from pipes, boilers and mechanical systems only if they are being scrapped; encapsulation, enclosure and disposal of asbestos-containing materials by hand or with equipment or machinery; scaffolding; fabrication of temporary wooden barriers; and assembly of decontamination stations.

LABO0067-006 06/28/2010

AREA "A" - ALAMEDA, CONTRA COSTA, MARIN, SAN FRANCISCO, SAN MATEO AND SANTA CLARA COUNTIES

AREA "B" - ALPINE, AMADOR, BUTTE, CALAVERAS, COLUSA, EL DORADO, FRESNO, GLENN, KINGS, LASSEN, MADERA, MARIPOSA, MERCED, MODOC, MONTEREY, NAPA, NEVADA, PLACER, PLUMAS, SACRAMENTO, SAN BENITO, SAN JOAQUIN, SANTA CRUZ, SHASTA, SIERRA, SISKIYOU, SOLANO, SONOMA, STANISLAUS, SUTTER, TEHAMA, TRINITY, TULARE, TUOLUMNE, YOLO AND YUBA COUNTIES

	Rates	Fringes
Laborers: (CONSTRUCTION CRAFT LABORERS - AREA A:)		
Construction Specialist Group	$ 27.84	15.82
GROUP 1	$ 27.14	15.82
GROUP 1-a	$ 27.36	15.82
GROUP 1-c	$ 27.19	15.82
GROUP 1-e	$ 27.69	15.82
GROUP 1-f	$ 27.72	15.82
GROUP 1-g (Contra Costa County)	$ 27.34	15.82
GROUP 2	$ 26.99	15.82
GROUP 3	$ 26.89	15.82
GROUP 4	$ 20.58	15.82

See groups 1-b and 1-d under laborer classifications.

Laborers: (CONSTRUCTION CRAFT LABORERS - AREA B:)		
Construction Specialist Group	$ 26.84	15.82
GROUP 1	$ 26.14	15.82
GROUP 1-a	$ 26.36	15.82
GROUP 1-c	$ 26.19	15.82
GROUP 1-e	$ 26.69	15.82
GROUP 1-f	$ 26.72	15.82

GROUP 2.....$ 25.99 15.82
GROUP 3.....$ 25.89 15.82
GROUP 4.....$ 19.58 15.82
See groups 1-b and 1-d under laborer classifications.
Laborers: (GUNITE - AREA A:)
GROUP 1.....$ 28.10 15.82
GROUP 2.....$ 27.60 15.82
GROUP 3.....$ 27.60 15.82
GROUP 4.....$ 27.60 15.82
Laborers: (GUNITE - AREA B:)
GROUP 1.....$ 27.10 15.82
GROUP 2.....$ 26.60 15.82
GROUP 3.....$ 26.01 15.82
GROUP 4.....$ 25.89 15.82
Laborers: (WRECKING - AREA A:)
GROUP 1.....$ 27.14 15.82
GROUP 2.....$ 26.99 15.82
Laborers: (WRECKING - AREA B:)
GROUP 1.....$ 26.14 15.82
GROUP 2.....$ 25.99 15.82
Landscape Laborer (GARDENERS,
HORTICULTURAL & LANDSCAPE
LABORERS - AREA A:)
(1) New Construction.....$ 26.89 15.82
(2) Establishment Warranty
Period.....$ 20.58 15.82
Landscape Laborer (GARDENERS,
HORTICULURAL & LANDSCAPE
LABORERS - AREA B:)
(1) New Construction.....$ 25.89 15.82
(2) Establishment Warranty
Period.....$ 19.58 15.82

FOOTNOTES:
Laborers working off or with or from bos'n chairs, swinging scaffolds, belts shall receive $0.25 per hour above the applicable wage rate. This shall not apply to workers entitled to receive the wage rate set forth in Group 1-a below.

LABORER CLASSIFICATIONS

CONSTRUCTION SPECIALIST GROUP: Asphalt ironer and raker; Chainsaw; Laser beam in connection with laborers' work; Cast-in- place manhole form setter; Pressure pipelayer; Davis trencher - 300 or similar type (and all small trenchers); Blaster; Diamond driller; Multiple unit drill; Hydraulic drill

GROUP 1: Asphalt spreader boxes (all types); Barko, Wacker and similar type tampers; Buggymobile; Caulker, bander, pipewrapper, conduit layer, plastic pipelayer; Certified hazardous waste worker including Leade Abatement; Compactors of all types; Concrete and magnesite mixer, 1/2 yd. and under; Concrete pan work; Concrete sander; Concrete saw; Cribber and/or shoring; Cut granite curb setter; Dri-pak-it machine; Faller, logloader and bucker; Form

raiser, slip forms; Green cutter; Headerboard, Hubsetter, aligner, by any method; High pressure blow pipe (1-1/2" or over, 100 lbs. pressure/over); Hydro seeder and similar type; Jackhammer operator; Jacking of pipe over 12 inches; Jackson and similar type compactor; Kettle tender, pot and worker applying asphalt, lay-kold, creosote, lime, caustic and similar type materials (applying means applying, dipping or handling of such materials); Lagging, sheeting, whaling, bracing, trenchjacking, lagging hammer; Magnesite, epoxyresin, fiberglass, mastic worker (wet or dry); No joint pipe and stripping of same, including repair of voids; Pavement breaker and spader, including tool grinder; Perma curb; Pipelayer (including grade checking in connection with pipelaying); Precast-manhole setter; Pressure pipe tester; Post hole digger, air, gas and electric; Power broom sweeper; Power tampers of all types (except as shown in Group 2); Ram set gun and stud gun; Riprap stonepaver and rock-slinger, including placing of sacked concrete and/or sand (wet or dry) and gabions and similar type; Rotary scarifier or multiple head concrete chipping scarifier; Roto and Ditch Witch; Rototiller; Sandblaster, pot, gun, nozzle operators; Signalling and rigging; Tank cleaner; Tree climber; Turbo blaster; Vibrascreed, bull float in connection with laborers' work; Vibrator; Hazardous waste worker (lead removal); Asbestos and mold removal worker

GROUP 1-a: Joy drill model TWM-2A; Gardner-Denver model DH143 and similar type drills; Track driller; Jack leg driller; Wagon driller; Mechanical drillers, all types regardless of type or method of power; Mechanical pipe layers, all types regardless of type or method of power; Blaster and powder; All work of loading, placing and blasting of all powder and explosives of whatever type regardless of method used for such loading and placing; High scalers (including drilling of same); Tree topper; Bit grinder

GROUP 1-b: Sewer cleaners shall receive $4.00 per day above Group 1 wage rates. "Sewer cleaner" means any worker who handles or comes in contact with raw sewage in small diameter sewers. Those who work inside recently active, large diameter sewers, and all recently active sewer manholes shal receive $5.00 per day above Group 1 wage rates.

GROUP 1-c: Burning and welding in connection with laborers' work; Synthetic thermoplastics and similar type welding

GROUP 1-d: Maintenance and repair track and road beds. All employees performing work covered herein shall receive $ .25 per hour above their regular rate for all work performed on underground structures not specifically covered herein. This paragraph shall not be construed to apply to work below ground level in open cut. It shall apply to cut and cover work of subway construction after the temporary cover has been placed.

GROUP 1-e: Work on and/or in bell hole footings and shafts thereof, and work on and in deep footings. (A deep footing is a hole 15 feet or more in depth.) In the event the

depth of the footing is unknown at the commencement of excavation, and the final depth exceeds 15 feet, the deep footing wage rate would apply to all employees for each and every day worked on or in the excavation of the footing from the date of inception.

GROUP 1-f: Wire winding machine in connection with guniting or shot crete

GROUP 1-g, CONTRA COSTA COUNTY: Pipelayer (including grade checking in connection with pipelaying); Caulker; Bander; Pipewrapper; Conduit layer; Plastic pipe layer; Pressure pipe tester; No joint pipe and stripping of same, including repair of voids; Precast manhole setters, cast in place manhole form setters

GROUP 2: Asphalt shoveler; Cement dumper and handling dry cement or gypsum; Choke-setter and rigger (clearing work); Concrete bucket dumper and chute; Concrete chipping and grinding; Concrete laborer (wet or dry); Driller tender, chuck tender, nipper; Guinea chaser (stake), grout crew; High pressure nozzle, adductor; Hydraulic monitor (over 100 lbs. pressure); Loading and unloading, carrying and hauling of all rods and materials for use in reinforcing concrete construction; Pittsburgh chipper and similar type brush shredders; Sloper; Single foot, hand-held, pneumatic tamper; All pneumatic, air, gas and electric tools not listed in Groups 1 through 1-f; Jacking of pipe - under 12 inches

GROUP 3: Construction laborers, including bridge and general laborer; Dump, load spotter; Flag person; Fire watcher; Fence erector; Guardrail erector; Gardener, horticultural and landscape laborer; Jetting; Limber, brush loader and piler; Pavement marker (button setter); Maintenance, repair track and road beds; Streetcar and railroad construction track laborer; Temporary air and water lines, Victaulic or similar; Tool room attendant (jobsite only)

GROUP 4: Final clean-up work of debris, grounds and building including but not limited to: street cleaner; cleaning and washing windows; brick cleaner (jobsite only); material cleaner (jobsite only). The classification "material cleaner" is to be utilized under the following conditions:
A: at demolition site for the salvage of the material.
B: at the conclusion of a job where the material is to be salvaged and stocked to be reused on another job.
C: for the cleaning of salvage material at the jobsite or temporary jobsite yard.

The material cleaner classification should not be used in the performance of "form stripping, cleaning and oiling and moving to the next point of erection".

GUNITE LABORER CLASSIFICATIONS

GROUP 1: Structural Nozzleman

GROUP 2: Nozzleman, Gunman, Potman, Groundman

GROUP 3: Reboundman

GROUP 4: Gunite laborer

WRECKING WORK LABORER CLASSIFICATIONS

GROUP 1: Skilled wrecker (removing and salvaging of sash, windows and materials)

GROUP 2: Semi-skilled wrecker (salvaging of other building materials)

LABO0185-002 07/01/2013

ALPINE, AMADOR, BUTTE, COLUSA, EL DORADO, GLENN, LASSEN, MODOC, NEVADA, PLACER, PLUMAS, SACRAMENTO, SHASTA, SIERRA, SISKIYOU, SUTTER, TEHAMA, TRINITY, YOLO AND YUBA COUNTIES

	Rates	Fringes
LABORER		
Mason Tender-Brick	$ 31.52	16.53

LABO0185-005 07/01/2013

ALPINE, AMADOR, BUTTE, COLUSA, EL DORADO, GLENN, LASSEN, MODOC, NEVADA, PLACER, PLUMAS, SACRAMENTO, SHASTA, SIERRA, SISKIYOU, SUTTER, TEHAMA, TRINITY, YOLO AND YUBA COUNTIES

	Rates	Fringes
Tunnel and Shaft Laborers:		
GROUP 1	$ 34.10	16.53
GROUP 2	$ 33.87	16.53
GROUP 3	$ 33.62	16.53
GROUP 4	$ 33.17	16.53
GROUP 5	$ 32.63	16.53
Shotcrete Specialist	$ 36.12	16.53

TUNNEL AND SHAFT CLASSIFICATIONS

GROUP 1: Diamond driller; Groundmen; Gunite and shotcrete nozzlemen

GROUP 2: Rodmen; Shaft work & raise (below actual or excavated ground level)

GROUP 3: Bit grinder; Blaster, driller, powdermen, heading; Cherry pickermen - where car is lifted; Concrete finisher in tunnel; Concrete screedman; Grout pumpman and potman; Gunite & shotcrete gunman & potman; Headermen; High pressure nozzleman; Miner - tunnel, including top and bottom man on shaft and raise work; Nipper; Nozzleman on

slick line; Sandblaster - potman, Robotic Shotcrete Placer, Segment Erector, Tunnel Muck Hauler, Steel Form raiser and setter; Timberman, retimberman (wood or steel or substitute materials therefore); Tugger (for tunnel laborer work); Cable tender; Chuck tender; Powderman - primer house

GROUP 4: Vibrator operator, pavement breaker; Bull gang - muckers, trackmen; Concrete crew - includes rodding and spreading, Dumpmen (any method)

GROUP 5: Grout crew; Reboundman; Swamper/ Brakeman

LABO0261-002 07/01/2009

MARIN COUNTY

	Rates	Fringes
LABORER (TRAFFIC CONTROL/LANE CLOSURE)		
Escort Driver, Flag Person..	$ 26.89	14.93
Traffic Control Person I....	$ 27.19	14.93
Traffic Control Person II...	$ 24.69	14.93

TRAFFIC CONTROL PERSON I: Layout of traffic control, crash cushions, construction area and roadside signage.

TRAFFIC CONTROL PERSON II: Installation and removal of temporary/permanent signs, markers, delineators and crash cushions.

LABO0261-004 07/01/2013

MARIN COUNTY

	Rates	Fringes
Tunnel and Shaft Laborers:		
GROUP 1.....	$ 34.10	16.53
GROUP 2.....	$ 33.87	16.53
GROUP 3.....	$ 33.62	16.53
GROUP 4.....	$ 33.17	16.53
GROUP 5.....	$ 32.63	16.53
Shotcrete Specialist.....	$ 36.12	16.53

TUNNEL AND SHAFT CLASSIFICATIONS

GROUP 1: Diamond driller; Groundmen; Gunite and shotcrete nozzlemen

GROUP 2: Rodmen; Shaft work & raise (below actual or excavated ground level)

GROUP 3: Bit grinder; Blaster, driller, powdermen, heading; Cherry pickermen - where car is lifted; Concrete finisher in tunnel; Concrete screedman; Grout pumpman and potman; Gunite & shotcrete gunman & potman; Headermen; High pressure nozzleman; Miner - tunnel, including top and

bottom man on shaft and raise work; Nipper; Nozzleman on slick line; Sandblaster - potman, Robotic Shotcrete Placer, Segment Erector, Tunnel Muck Hauler, Steel Form raiser and setter; Timberman, retimberman (wood or steel or substitute materials therefore); Tugger (for tunnel laborer work); Cable tender; Chuck tender; Powderman - primer house

GROUP 4: Vibrator operator, pavement breaker; Bull gang - muckers, trackmen; Concrete crew - includes rodding and spreading, Dumpmen (any method)

GROUP 5: Grout crew; Reboundman; Swamper/ Brakeman

LABO0261-007 07/01/2013

MARIN COUNTY

	Rates	Fringes
LABORER		
Mason Tender-Brick	$ 32.77	16.53

LABO0324-004 07/01/2009

NAPA, SOLANO, AND SONOMA, COUNTIES

	Rates	Fringes
LABORER (TRAFFIC CONTROL/LANE CLOSURE)		
Escort Driver, Flag Person	$ 25.89	14.93
Traffic Control Person I	$ 26.19	14.93
Traffic Control Person II	$ 23.69	14.93

TRAFFIC CONTROL PERSON I: Layout of traffic control, crash cushions, construction area and roadside signage.

TRAFFIC CONTROL PERSON II: Installation and removal of temporary/permanent signs, markers, delineators and crash cushions.

LABO0324-008 07/01/2013

NAPA, SOLANO, AND SONOMA COUNTIES

	Rates	Fringes
Tunnel and Shaft Laborers:		
GROUP 1	$ 34.10	16.53
GROUP 2	$ 33.87	16.53
GROUP 3	$ 33.62	16.53
GROUP 4	$ 33.17	16.53
GROUP 5	$ 32.63	16.53
Shotcrete Specialist	$ 36.12	16.53

TUNNEL AND SHAFT CLASSIFICATIONS

GROUP 1: Diamond driller; Groundmen; Gunite and shotcrete

nozzlemen

GROUP 2: Rodmen; Shaft work & raise (below actual or excavated ground level)

GROUP 3: Bit grinder; Blaster, driller, powdermen, heading; Cherry pickermen - where car is lifted; Concrete finisher in tunnel; Concrete screedman; Grout pumpman and potman; Gunite & shotcrete gunman & potman; Headermen; High pressure nozzleman; Miner - tunnel, including top and bottom man on shaft and raise work; Nipper; Nozzleman on slick line; Sandblaster - potman, Robotic Shotcrete Placer, Segment Erector, Tunnel Muck Hauler, Steel Form raiser and setter; Timberman, retimberman (wood or steel or substitute materials therefore); Tugger (for tunnel laborer work); Cable tender; Chuck tender; Powderman - primer house

GROUP 4: Vibrator operator, pavement breaker; Bull gang - muckers, trackmen; Concrete crew - includes rodding and spreading, Dumpmen (any method)

GROUP 5: Grout crew; Reboundman; Swamper/ Brakeman

LABO0324-010 07/01/2013

NAPA, SOLANO AND SONOMA COUNTIES

	Rates	Fringes
LABORER (Brick)		
Mason Tender-Brick	$ 31.95	16.53

LABO1414-005 08/07/2013

	Rates	Fringes
Plasterer tender	$ 30.00	16.36

Work on a swing stage scaffold: $1.00 per hour additional.

PAIN0016-004 01/01/2013

MARIN, NAPA, SOLANO & SONOMA COUNTIES

	Rates	Fringes
Painters:	$ 33.86	20.26

PREMIUMS:
EXOTIC MATERIALS - $0.75 additional per hour.
SPRAY WORK: - $0.50 additional per hour.
INDUSTRIAL PAINTING - $0.25 additional per hour
[Work on industrial buildings used for the manufacture and processing of goods for sale or service; steel construction (bridges), stacks, towers, tanks, and similar structures]

HIGH WORK:
over 50 feet - $2.00 per hour additional
100 to 180 feet - $4.00 per hour additional

Over 180 feet - $6.00 per houir additional

PAIN0016-005 01/01/2013

ALPINE, BUTTE, COLUSA, EL DORADO (west of the Sierra Nevada Mountains), GLENN, LASSEN (west of Hwy. 395, excluding Honey Lake); MARIN, MODOC, NAPA, NEVADA (west of the Sierra Nevada Mountains), PLACER (west of the Sierra Nevada Mountains), PLUMAS, SACRAMENTO, SHASTA, SIERRA (west of the Sierra Nevada Mountains), SISKIYOU, SOLANO, SONOMA, SUTTER, TEHAMA, TRINITY, YOLO AND YUBA COUNTIES

	Rates	Fringes
DRYWALL FINISHER/TAPER	$ 36.24	18.67

PAIN0016-007 01/01/2013

ALPINE, AMADOR, BUTTE, COLUSA. EL DORADO (west of the Sierra Nevada Mountains), GLENN, LASSEN (west of Highway 395, excluding Honey Lake), MODOC, NEVADA (west of the Sierra Nevada Mountains), PLACER (west of the Sierra Nevada Mountains), PLUMAS, SACRAMENTO, SHASTA, SIERRA (west of the Sierra Nevada Mountains), SISKIYOU, SUTTER, TEHAMA, TRINITY, YOLO & YUBA COUNTIES

	Rates	Fringes
Painters:	$ 29.06	15.98

SPRAY/SANDBLAST: $0.50 additional per hour.
EXOTIC MATERIALS: $1.00 additional per hour.
HIGH TIME: Over 50 ft above ground or water level $2.00 additional per hour. 100 to 180 ft above ground or water level $4.00 additional per hour. Over 180 ft above ground or water level $6.00 additional per hour.

PAIN0016-008 01/01/2013

MARIN, NAPA, SOLANO AND SONOMA COUNTIES

	Rates	Fringes
SOFT FLOOR LAYER	$ 44.87	17.98

PAIN0169-004 01/01/2013

MARIN , NAPA & SONOMA COUNTIES; SOLANO COUNTY (west of a line defined as follows: Hwy. 80 corridor beginning at the City of Fairfield, including Travis Air Force Base and Suisun City; going north of Manakas Corner Rd., continue north on Suisun Valley Rd. to the Napa County line; Hwy. 80 corridor south on Grizzly Island Rd. to the Grizzly Island Management area)

	Rates	Fringes

GLAZIER.....$ 41.88 21.59

---

* PAIN0567-001 07/01/2013

EL DORADO COUNTY (east of the Sierra Nevada Mountains); LASSEN COUNTY (east of Highway 395, beginning at Stacey and including Honey Lake); NEVADA COUNTY (east of the Sierra Nevada Mountains); PLACER COUNTY (east of the Sierra Nevada Mountains); AND SIERRA COUNTY (east of the Sierra Nevada Mountains)

	Rates	Fringes
Painters:		
Brush and Roller	$ 23.30	10.19
Spray Painter & Paperhanger	$ 24.15	10.19

PREMIUMS:
Special Coatings (Brush), and Sandblasting = $0.50/hr
Special Coatings (Spray), and Steeplejack = $1.00/hr
Special Coating Spray Steel = $1.25/hr
Swing Stage = $2.00/hr

*A special coating is a coating that requires the mixing of 2 or more products.

PAIN0567-007 07/01/2013

EL DORADO COUNTY (east of the Sierra Nevada Mountains); LASSEN COUNTY (east of Highway 395, beginning at Stacey and including Honey Lake); NEVADA COUNTY (east of the Sierra Nevada Mountains); PLACER COUNTY (east of the Sierra Nevada Mountains) AND SIERRA COUNTY (east of the Sierra Nevada Mountains)

	Rates	Fringes
SOFT FLOOR LAYER	$ 25.40	11.49

PAIN0567-010 07/01/2013

EL DORADO COUNTY (east of the Sierra Nevada Mountains); LASSEN COUNTY (east of Highway 395, beginning at Stacey and including Honey Lake); NEVADA COUNTY (east of the Sierra Nevada Mountains); PLACER COUNTY (east of the Sierra Nevada Mountains); AND SIERRA COUNTY (east of the Sierra Nevada Mountains)

	Rates	Fringes
Drywall		
(1) Taper	$ 27.07	11.14
(2) Steeplejack - Taper, over 40 ft with open space below	$ 28.57	11.14

PAIN0767-004 01/01/2013

ALPINE, AMADOR, BUTTE, COLUSA, EL DORADO, GLENN, LASSEN, MODOC, NEVADA, PLACER, PLUMAS, SACRAMENTO, SHASTA, SIERRA, SISKIYOU, SOLANO (Remainder), SUTTER, TEHAMA, TRINITY, YOLO, YUBA

	Rates	Fringes
GLAZIER	$ 32.24	19.88

PAID HOLIDAYS: New Year's Day, Martin Luther King, Jr. Day, President's Day, Memorial Day, Independence Day, Labor Day, Veteran's Day, Thanksgiving Day, and Christmas Day.

Employee rquired to wear a body harness shall receive $1.50 per hour above the basic hourly rate at any elevation.

PAIN1176-001 07/01/2013

HIGHWAY IMPROVEMENT

	Rates	Fringes
Parking Lot Striping/Highway Marking:		
GROUP 1	$ 28.27	11.65
GROUP 2	$ 28.60	11.65
GROUP 3	$ 26.96	11.65

CLASSIFICATIONS

GROUP 1: Striper: Layout and application of painted traffic stripes and marking; hot thermo plastic; tape, traffic stripes and markings

GROUP 2: Gamecourt & Playground Installer

GROUP 3: Protective Coating, Pavement Sealing

PAIN1237-001 01/01/2013

ALPINE; COLUSA; EL DORADO (west of the Sierra Nevada Mountains); GLENN; LASSEN (west of Highway 395, beginning at Stacey and including Honey Lake); MODOC; NEVADA (west of the Sierra Nevada Mountains); PLACER (west of the Sierra Nevada Mountains); PLUMAS; SACRAMENTO; SHASTA; SIERRA (west of the Sierra Nevada Mountains); SISKIYOU; SUTTER; TEHAMA; TRINITY; YOLO AND YUBA COUNTIES

	Rates	Fringes
SOFT FLOOR LAYER	$ 28.25	16.73

PLAS0300-003 07/01/2009

	Rates	Fringes

PLASTERER
AREA 295: Alpine, Amador, Butte, Colusa, El Dorado, Glenn, Lassen, Modoc, Nevada, Placer, Plumas, Sacramento, Shasta, Sierra, Siskiyou, Solano, Sutter, Tehema, Trinity, Yolo & Yuba Counties.....$ 32.82 15.10
AREA 355: Marin, Napa & Sonoma Counties.....$ 32.82 15.30

PLAS0300-005 06/28/2010

	Rates	Fringes
CEMENT MASON/CONCRETE FINISHER...	$ 28.65	18.56

PLUM0038-002 07/01/2013

MARIN AND SONOMA COUNTIES

	Rates	Fringes
PLUMBER (Plumber, Steamfitter, Refrigeration Fitter)		
(1) Work on wooden frame structures 5 stories or less excluding hgih-rise buildings and commercial work such as hospitals, prisons, hotels, schools, casinos, wastewater treatment plants, and resarch facilities as well as refrigeration pipefitting, service and repair work - MARKET RECOVERY RATE.....	$ 62.00	42.39
(2) All other work - NEW CONSTRUCTION RATE.....	$ 62.00	42.39

PLUM0038-006 07/01/2013

MARIN & SONOMA COUNTIES

	Rates	Fringes
Landscape/Irrigation Fitter (Underground/Utility Fitter).....	$ 52.70	31.45

PLUM0228-001 07/01/2013

BUTTE, COLUSA, GLENN, LASSEN, MODOC, PLUMAS, SHASTA, SIERRA, SISKIYOU, SUTTER, TEHAMA, TRINITY & YUBA COUNTIES

	Rates	Fringes

PLUMBER.....$ 36.70 24.69

PLUM0343-001 07/01/2013

NAPA AND SOLANO COUNTIES

	Rates	Fringes
PLUMBER/PIPEFITTER		
Light Commercial	$ 30.60	19.40
All Other Work	$ 47.50	28.20

DEFINITION OF LIGHT COMMERICIAL:
Work shall include strip shopping centers, office buildings, schools and other commercial structures which the total plumbing bid does not exceed Two Hundred and Fifty Thousand ($250,000) and the total heating and cooling does not exceed Two Hundred Fifty Thousand ($250,000); or Any projects bid in phases shall not qualify unless the total project is less than Two Hundred Fifty Thousand ($250,000) for the plumbing bid; and Two Hundred Fifty Thousand ($250,000) for the heating and cooling bid. Excluded are hospitals, jails, institutions and industrial projects, regardless size of the project

FOOTNOTES: While fitting galvanized material: $.75 per hour additional. Work from trusses, temporary staging, unguarded structures 35' from the ground or water: $.75 per hour additional. Work from swinging scaffolds, boatswains chairs or similar devices: $.75 per hour additional.

PLUM0350-001 01/01/2011

EL DORADO COUNTY (Lake Tahoe area only); NEVADA COUNTY (Lake Tahoe area only); AND PLACER COUNTY (Lake Tahoe area only)

	Rates	Fringes
PLUMBER/PIPEFITTER	$ 34.60	10.50

PLUM0355-001 07/01/2013

ALPINE, AMADOR, BUTTE, COLUSA, EL DORADO, GLENN, LASSEN, MODOC, NAPA, NEVADA, PLACER, PLUMAS, SACRAMENTO, SHASTA, SIERRA, SISKIYOU, SOLANO, SUTTER, TEHAMA, TRINITY, YOLO, AND YUBA COUNTIES

	Rates	Fringes
Underground Utility Worker /Landscape Fitter	$ 28.55	8.30

PLUM0442-003 07/01/2013

AMADOR (South of San Joaquin River) and ALPINE COUNTIES

	Rates	Fringes
PLUMBER	$ 37.00	22.59

PLUM0447-001 07/01/2013

AMADOR (north of San Joaquin River), EL DORADO (excluding Lake Tahoe area), NEVADA (excluding Lake Tahoe area); PLACER (excluding Lake Tahoe area), SACRAMENTO AND YOLO COUNTIES

	Rates	Fringes
PLUMBER/PIPEFITTER		
Journeyman	$ 41.77	22.35
Light Commercial Work	$ 32.23	17.22

ROOF0081-006 08/01/2011

MARIN, NAPA, SOLANO AND SONOMA COUNTIES

	Rates	Fringes
Roofer	$ 33.16	10.90

ROOF0081-007 08/01/2012

ALPINE, BUTTE, COLUSA, EL DORADO, GLENN,LASSEN, MODOC, NEVADA, PLACER, PLUMAS, SACRAMENTO, SHASTA, SIERRA, SISKIYOU, SUTTER, TEHAMA, TRINITY, YOLO, AND YUBA COUNTIES

	Rates	Fringes
Roofer	$ 32.33	11.97

---

* SFCA0483-003 01/01/2014

MARIN, NAPA, SOLANO AND SONOMA COUNTIES

	Rates	Fringes
SPRINKLER FITTER (Fire Sprinklers)	$ 52.42	25.62

SFCA0669-003 07/01/2013

ALPINE, BUTTE, COLUSA, EL DORADO, GLENN, LASSEN, MODOC, NEVADA, PLACER, PLUMAS, SACRAMENTO, SHASTA, SIERRA, SISKIYOU, SUTTER, TEHAMA, TRINITY, YOLO AND YUBA COUNTIES

	Rates	Fringes
SPRINKLER FITTER	$ 34.19	19.37

SHEE0104-006 07/01/2013

MARIN, NAPA, SOLANO SONOMA & TRINITY COUNTIES

	Rates	Fringes
Sheet Metal Worker		
Mechanical Contracts		
$200,000 or less	$ 51.30	35.96
All other work	$ 52.80	34.46

SHEE0104-009 07/01/2013

AMADOR, COLUSA, EL DORADO, NEVADA, PLACER, SACRAMENTO, SUTTER, YOLO AND YUBA COUNTIES

	Rates	Fringes
SHEET METAL WORKER	$ 38.43	29.31

SHEE0104-010 07/01/2013

AlPINE COUNTY

	Rates	Fringes
SHEET METAL WORKER	$ 35.87	26.88

SHEE0104-011 07/01/2013

BUTTE, COLUSA, EL DORADO, GLENN, LASSEN, MODOC, NEVADA, PLACER, PLUMAS, SACRAMENTO, SHASTA, SIERRA, SISKIYOU, SUTTER, TEHAMA, YOLO AND YUBA COUNTIES

	Rates	Fringes
Sheet Metal Worker (Metal decking and siding only)	$ 38.43	29.31

SHEE0104-014 07/01/2013

MARIN, NAPA, SOLANO, SONOMA AND TRINITY COUNTIES

	Rates	Fringes
SHEET METAL WORKER (Metal Decking and Siding only)	$ 52.80	34.46

SHEE0104-019 07/01/2013

BUTTE, GLENN, LASSEN, MODOC, PLUMAS, SHASTA, SIERRA, SISKIYOU AND TEHAMA COUNTIES

	Rates	Fringes
SHEET METAL WORKER		
Mechanical Jobs $200,000 & under	$ 29.54	27.16
Mechanical Jobs over $200,000	$ 38.43	29.31

TEAM0094-001 07/01/2013

	Rates	Fringes
Truck drivers:		
GROUP 1	$ 27.44	23.69
GROUP 2	$ 27.74	23.69
GROUP 3	$ 28.04	23.69
GROUP 4	$ 28.39	23.69
GROUP 5	$ 28.74	23.69

FOOTNOTES:
Articulated dump truck; Bulk cement spreader (with or without auger); Dumpcrete truck; Skid truck (debris box); Dry pre-batch concrete mix trucks; Dumpster or similar type; Slurry truck: Use dump truck yardage rate.
Heater planer; Asphalt burner; Scarifier burner; Industrial lift truck (mechanical tailgate); Utility and clean-up truck: Use appropriate rate for the power unit or the equipment utilized.

TRUCK DRIVER CLASSIFICATIONS

GROUP 1: Dump trucks, under 6 yds.; Single unit flat rack (2-axle unit); Nipper truck (when flat rack truck is used appropriate flat rack shall apply); Concrete pump truck (when flat rack truck is used appropriate flat rack shall apply); Concrete pump machine; Fork lift and lift jitneys; Fuel and/or grease truck driver or fuel person; Snow buggy; Steam cleaning; Bus or personhaul driver; Escort or pilot car driver; Pickup truck; Teamster oiler/greaser and/or serviceperson; Hook tender (including loading and unloading); Team driver; Tool room attendant (refineries)

GROUP 2: Dump trucks, 6 yds. and under 8 yds.; Transit mixers, through 10 yds.; Water trucks, under 7,000 gals.; Jetting trucks, under 7,000 gals.; Single-unit flat rack (3-axle unit); Highbed heavy duty transport; Scissor truck; Rubber-tired muck car (not self-loaded); Rubber-tired truck jumbo; Winch truck and "A" frame drivers; Combination winch truck with hoist; Road oil truck or bootperson; Buggymobile; Ross, Hyster and similar straddle carriers; Small rubber-tired tractor

GROUP 3: Dump trucks, 8 yds. and including 24 yds.; Transit mixers, over 10 yds.; Water trucks, 7,000 gals. and over; Jetting trucks, 7,000 gals. and over; Vacuum trucks under 7500 gals. Trucks towing tilt bed or flat bed pull trailers; Lowbed heavy duty transport; Heavy duty transport tiller person; Self- propelled street sweeper with self-contained refuse bin; Boom truck - hydro-lift or Swedish type extension or retracting crane; P.B. or similar type self-loading truck; Tire repairperson; Combination bootperson and road oiler; Dry distribution truck (A bootperson when employed on such equipment, shall receive the rate specified for the classification of road oil trucks or bootperson); Ammonia nitrate distributor, driver and mixer; Snow Go and/or plow

GROUP 4: Dump trucks, over 25 yds. and under 65 yds.; Water pulls - DW 10's, 20's, 21's and other similar equipment when pulling Aqua/pak or water tank trailers; Helicopter pilots (when transporting men and materials); Lowbedk Heavy Duty Transport up to including 7 axles; DW10's, 20's, 21's and other similar Cat type, Terra Cobra, LeTourneau Pulls, Tournorocker, Euclid and similar type equipment when pulling fuel and/or grease tank trailers or other miscellaneous trailers; Vacuum Trucks 7500 gals and over and truck repairman

GROUP 5: Dump trucks, 65 yds. and over; Holland hauler; Low bed Heavy Duty Transport over 7 axles

---

WELDERS - Receive rate prescribed for craft performing operation to which welding is incidental.

==========

Unlisted classifications needed for work not included within the scope of the classifications listed may be added after award only as provided in the labor standards contract clauses (29CFR 5.5 (a) (1) (ii)).

The body of each wage determination lists the classification and wage rates that have been found to be prevailing for the cited type(s) of construction in the area covered by the wage determination. The classifications are listed in alphabetical order of "identifiers" that indicate whether the particular rate is union or non-union.

Union Identifiers

An identifier enclosed in dotted lines beginning with characters other than "SU" denotes that the union classification and rate have found to be prevailing for that classification. Example: PLUM0198-005 07/01/2011. The first four letters , PLUM, indicate the international union and the four-digit number, 0198, that follows indicates the local union number or district council number where applicable , i.e., Plumbers Local 0198. The next number, 005 in the example, is an internal number used in processing the wage determination. The date, 07/01/2011, following these characters is the effective date of the most current negotiated rate/collective bargaining agreement which would be July 1, 2011 in the above example.

Union prevailing wage rates will be updated to reflect any changes in the collective bargaining agreements governing the rates.

0000/9999: weighted union wage rates will be published annually

each January.

Non-Union Identifiers

Classifications listed under an "SU" identifier were derived from survey data by computing average rates and are not union rates; however, the data used in computing these rates may include both union and non-union data. Example: SULA2004-007 5/13/2010. SU indicates the rates are not union majority rates, LA indicates the State of Louisiana; 2004 is the year of the survey; and 007 is an internal number used in producing the wage determination. A 1993 or later date, 5/13/2010, indicates the classifications and rates under that identifier were issued as a General Wage Determination on that date.

Survey wage rates will remain in effect and will not change until a new survey is conducted.

WAGE DETERMINATION APPEALS PROCESS

1.) Has there been an initial decision in the matter? This can be:

* an existing published wage determination
* a survey underlying a wage determination
* a Wage and Hour Division letter setting forth a position on a wage determination matter
* a conformance (additional classification and rate) ruling

On survey related matters, initial contact, including requests for summaries of surveys, should be with the Wage and Hour Regional Office for the area in which the survey was conducted because those Regional Offices have responsibility for the Davis-Bacon survey program. If the response from this initial contact is not satisfactory, then the process described in 2.) and 3.) should be followed.

With regard to any other matter not yet ripe for the formal process described here, initial contact should be with the Branch of Construction Wage Determinations. Write to:

Branch of Construction Wage Determinations
Wage and Hour Division
U.S. Department of Labor
200 Constitution Avenue, N.W.
Washington, DC 20210

2.) If the answer to the question in 1.) is yes, then an interested party (those affected by the action) can request review and reconsideration from the Wage and Hour Administrator (See 29 CFR Part 1.8 and 29 CFR Part 7). Write to:

Wage and Hour Administrator
U.S. Department of Labor
200 Constitution Avenue, N.W.

Washington, DC 20210

The request should be accompanied by a full statement of the interested party's position and by any information (wage payment data, project description, area practice material, etc.) that the requestor considers relevant to the issue.

3.) If the decision of the Administrator is not favorable, an interested party may appeal directly to the Administrative Review Board (formerly the Wage Appeals Board). Write to:

Administrative Review Board
U.S. Department of Labor
200 Constitution Avenue, N.W.
Washington, DC 20210

4.) All decisions by the Administrative Review Board are final.

==========

END OF GENERAL DECISION

****

Important Special Notice

****

Bidders are advised that, as required by federal law, the City of Sacramento is implementing new Disadvantaged Business Enterprise (DBE) requirements. Section 2, "Proposal Requirements and Conditions," under subsection titled "Disadvantaged Business Enterprises (DBE)" and Section 5, "General," under subsection titled "Performance of Subcontractors" of these Special Provisions cover the DBE requirements.

****

PRE-BID MEETING

All bidders are encouraged, but not required, to attend the pre-bid conference. At this meeting, requirements pertaining to "Disadvantaged Business Enterprise" (DBE) Program will be reviewed and any questions pertaining to the project will be answered. This meeting is also to inform DBEs of subcontracting and material supply opportunities.

The conference will be held at:

Historic City Hall

915 I Street

Historic Council Chambers

Sacramento, CA 95814

For information regarding the DBE Program, contact **Lucinda Willcox** at (916) 808-5052

CITY OF SACRAMENTO
DEPARTMENT OF PUBLIC WORKS

FEDERAL AID PROJECT NO.: **HPLUL-5002(167)**

CITY PROJECT NO.: **T15029031**

NOTICE TO CONTRACTORS

Sealed proposals for the work entitled:

WEST TUNNEL ACCESS RAMPS

will be received by the City Clerk of the City of Sacramento at the Office of the City Clerk, 915 I Street (New City Hall), 1st Floor, up to the hour of 2:00 PM, Wednesday, January 15, 2014 and will be publicly opened and read at 2:00 PM, or as soon thereafter as business allows, in Hearing Room on 2nd Floor, 915 I Street (Historic City Hall).

General work description:

The work to be performed under these Special Provisions consists, in general, of improvements to the sidewalks at the intersection of 2nd Street at I Street and improvements to the Amtrak Railroad Station and California State Railroad Museum Parking Lots, including constructing new curbs, gutters and sidewalks, and new pavement section, pavement resurfacing, signing and striping, landscaping, and parking lot lighting improvements.

THIS PROJECT IS SUBJECT TO THE "BUY AMERICA" PROVISIONS OF THE SURFACE TRANSPORTATION ASSISTANCE ACT OF 1982 AS AMENDED BY MAP-21.

The Contractor shall possess a license or a combination of classes required by the categories and type of work included in this contract at the time this contract is awarded.

Bids are required for the entire work described herein. This contract is subject to the State contract nondiscrimination and compliance requirements pursuant to the Government Code Section 12990.

All such proposals received and any work performed thereunder must comply with the requirements of Title 3 of the Sacramento City Code.

Bid protests must be filed and maintained in accordance with the provisions of Sections 3.60.460 through 3.60.560 of the Sacramento City Code. Bid protests that do not comply with Sections 3.60.460 through 3.60.560 of the Sacramento City Code shall be invalid and shall not be considered. A bid protest fee of $750.00 is required at the time of filing to be considered valid in accordance with City of Sacramento Resolution No. 2003-231 dated April 29, 2003. As used herein, the term "bid protest" includes any bid protest that (1) claims that one or more bidders on this contract should be disqualified or rejected for any reason, or (2) contests a City staff recommendation to award this contract to a particular bidder, or (3) contests a City staff recommendation to disqualify or reject one or more bidders on this contract. A copy of Sections 3.60.460 through 3.60.560 of the Sacramento City Code may be

obtained from the Project Manager, or from the City Clerk, located at 915 I Street, 1st Floor, Sacramento, CA 95814.

Bids must be submitted on printed forms supplied in the Contract Documents. Bids must be enclosed in an envelope marked:

SEALED PROPOSAL AND BID
FOR
WEST TUNNEL RAMPS ACCESS PROJECT
(PN: T15029031)

Technical questions should be directed to the Department of Public Works to the attention of the Project Manager, Marc Lee, 915 I Street, Room 2000, Sacramento, California, 95814, at mlee@cityofsacramento.org or telephone (916) 808-7481.

The successful bidder shall furnish a payment bond and a performance bonds for 100% of the contract amount.

The City of Sacramento hereby notifies all bidders that it will affirmatively insure that in any contract entered into pursuant to this advertisement, disadvantaged business enterprises will be afforded full opportunity to submit bids in response to this invitation.

Pursuant to Section 1773 of the Labor Code, the general prevailing wage rates in the county, or counties, in which the work is to be done have been determined by the Director of the California Department of Industrial Relations. These wages are set forth in the General Prevailing Wage Rates for this project, available from the California Department of Industrial Relations' Internet web site at http://www.dir.ca.gov. The Federal minimum wage rates for this project as predetermined by the United States Secretary of Labor are set forth in the books issued for bidding purposes entitled "Proposal and Contract," and in copies of this book that may be examined at the offices described above where project plans, special provisions, and proposal forms may be seen. Addenda to modify the Federal minimum wage rates, if necessary, will be issued to holders of "Proposal and Contract" books. Future effective general prevailing wage rates, which have been predetermined and are on file with the California Department of Industrial Relations are referenced but not printed in the general prevailing wage rates.

Attention is directed to the Federal minimum wage rate requirements in the books entitled "Proposal and Contract." If there is a difference between the minimum wage rates predetermined by the Secretary of Labor and the general prevailing wage rates determined by the Director of the California Department of Industrial Relations for similar classifications of labor, the Contractor and subcontractors shall pay not less than the higher wage rate. The Department will not accept lower State wage rates not specifically included in the Federal minimum wage determinations. This includes "helper" (or other classifications based on hours of experience) or any other classification not appearing in the Federal wage determinations. Where Federal wage determinations do not contain the State wage rate determination otherwise available for use by the Contractor and subcontractors, the Contractor and subcontractors shall pay not less than the Federal minimum wage rate, which most closely approximates the duties of the employees in question.

The U.S. Department of Transportation (DOT) provides a toll-free "hotline" service to report bid rigging activities. Bid rigging activities can be reported Mondays through Fridays, between 8:00 a.m. and 5:00 p.m., Eastern Time, Telephone No. 1-800-424-9071. Anyone with knowledge of possible bid rigging, bidder collusion, or other fraudulent activities should use the "hotline" to report these activities. The "hotline" is part of the DOT's continuing effort to identify and investigate highway construction contract fraud and abuse and is operated under the direction of the DOT Inspector General. All information will be treated confidentially and caller anonymity will be respected.

PARKING LOT IMPROVEMENTS NEAR WEST TUNNEL RAMPS
IN THE
CITY OF SACRAMENTO

Federal Aid Project No. STPL 5002(101)

City Project No.: T15029031

THE SPECIAL PROVISIONS CONTAINED HEREIN HAVE BEEN PREPARED BY OR UNDER THE DIRECTION OF THE FOLLOWING REGISTERED ENGINEERS:

Civil:

R. Matthew Brogan, Registered Civil Engineer

REGISTERED PROFESSIONAL ENGINEER
R. MATTHEW BROGAN
NO. 63854
Exp. 9/30/14
CIVIL
STATE OF CALIFORNIA

Electrical:

Kin Y. Chan, Registered Civil Engineer

REGISTERED PROFESSIONAL ENGINEER
KIN Y. CHAN
No. 55391
Exp. 12/31/13
CIVIL
STATE OF CALIFORNIA

Landscape:

Andrzej Woroniecki, Registered Landscape Architect

LICENSED LANDSCAPE ARCHITECT
ANDRZEJ J. WORONIECKI
3865
SIGNATURE
11/08/13
DATE
7/31/2015
RENEWAL DATE
STATE OF CALIFORNIA

Table of Contents

SPECIAL PROVISIONS i
SECTION NO. 1 - SPECIFICATIONS AND PLANS 5
SECTION NO. 2 - PROPOSAL REQUIREMENTS AND CONDITIONS 7
2-1.01 GENERAL 7
2-1.015 FEDERAL LOBBYING RESTRICTIONS 7
2-1.02 DISADVANTAGED BUSINESS ENTERPRISE (DBE) 8
SECTION NO. 3 - AWARD AND EXECUTION OF CONTRACT 11
3-1.01 GENERAL 11
SECTION NO. 4 - BEGINNING OF WORK, TIME OF COMPLETION AND LIQUIDATED DAMAGES 12
SECTION NO. 5 - GENERAL 12
5.1 LABOR NONDISCRIMINATION 12
5.2 PREVAILING WAGE 12
5.3 TRAINING 13
5.4 PUBLIC SAFETY 13
5.5 BUY AMERICA REQUIREMENTS 15
5.6 REMOVAL OF ASBESTOS AND HAZARDOUS SUBSTANCES 15
5.7 SUBCONTRACTOR AND DBE RECORDS 15
5.8 PERFORMANCE OF DISADVANTAGED BUSINESS ENTERPRISES 16
5.9 SUBCONTRACTING 17
5.10 PROMPT PROGRESS PAYMENT TO SUBCONTRACTORS 18
5.11 PROMPT PAYMENT OF FUNDS WITHHELD TO SUBCONTRACTORS 18
5.12 PAYMENTS 18
5.13 ENCROACHMENT PERMIT 19
SECTION NO. 6 - (BLANK) 19
SECTION NO. 7 - WORKER'S COMPENSATION AND INSURANCE 19
7.1 WORKER'S COMPENSATION 19
7.2 COMPREHENSIVE AUTO AND GENERAL LIABILITY INSURANCE 19
7.3 CERTIFICATE OF INSURANCE 20
7.4 WORKER'S COMPENSATION CERTIFICATE 20
7.5 FAILURE TO MAINTAIN INSURANCE 20
SECTION NO. 8 - MATERIALS (BLANK) 21
SECTION NO. 9 - GENERAL REQUIREMENTS 21
9.1 SCOPE AND LOCATION OF WORK 21
9.2 SPECIFICATIONS 21
9.3 ORDER OF WORK 21
9.4 COMPLETION TIME 23
9.5 PROVIDING BONDS AND SURETY 23
9.6 PRE-BID INTERPRETATION OF CONTRACT DOCUMENTS 23
9.7 NO TRUCK HAUL ROUTE ON 28TH STREET SOUTH OF E STREET 24
9.8 CERTIFICATE OF COMPLIANCE 24
9.9 FINAL PAY QUANTITY 24
9.10 EQUIPMENT TO BE SUPPLIED 24
9.11 HANDLING AND REMOVAL OF HAZARDOUS OR CONTAMINATED MATERIALS 25
9.12 COORDINATION 25
9.13 AMTRAK CART CONTROL COORDINATION 27
9.14 PROJECT SCHEDULING 27
9.15 PROTECTION OF EXISTING IMPROVEMENTS 27
9.16 TRAFFIC HANDLING, PUBLIC SAFETY AND CONVENIENCE 28
9.17 NIGHT TIME WORK 30
9.18 USE OF SLIP-FORM MACHINES FOR CONCRETE CONSTRUCTION 30
9.19 TRAFFIC CONTROL AND HANDLING FOR CONSTRUCTION STAKING 30
9.20 PUBLIC NOTIFICATION 31
9.21 EQUIPMENT LIST AND DRAWINGS SUBMITTALS 31
9.22 PROOF OF COMPLIANCE WITH CONTRACT 31
9.23 BACKFILLING OF VOIDS 32
9.24 PAVEMENT CUTTING AND RESTORATION 32
9.25 PROTECTION OF TREES 32
9.26 TREE TRIMMING 33
9.27 STOP WORK IF CULTURAL RESOURCES ARE DISCOVERED 35

9.28 HEALTH AND SAFETY 35
9.29 PERMITS AND STAGING AREA 35
9.30 RECORD DRAWINGS 36
9.31 MANUFACTURER'S DIRECTION 36
9.32 STORAGE OF MATERIALS AND EQUIPMENT 36
9.33 CLEANING UP 37
9.34 TIME BETWEEN CONCRETE SIDEWALK REMOVAL AND REPLACEMENT 37
9.35 REMOVAL OF ON-STREET PARKING 38
9.36 REGIONAL TRANSIT COORDINATION 39
9.37 MAINTAINING EXISTING DRAINAGE SYSTEMS 39
9.38 WORK PERFORMED BY CITY CREWS 39
9.39 EMERGENCY SEWER, WATER, AND DRAINAGE SERVICE 40
9.40 EROSION AND SEDIMENT CONTROL PLAN 40
9.41 PROTECTION OF SURVEY MONUMENTS 41
9.42 WORK AFFECTING THE PUBLIC RIGHTS OF WAY 41
9.43 EQUIPMENT TO BE SALVAGED 41
9.44 UTILITIES INFORMATION AND REQUIREMENTS 41
9.45 MAINTAINING EXISTING ELECTRICAL FACILITIES 42
9.46 MAINTAINING EXISTING SANITARY SEWER SYSTEMS AND SERVICES 42
9.47 MAINTAINING EXISTING WATER SYSTEMS AND SERVICES 43
9.48 TEMPORARY DIVERSION/BYPASS OF EXISTING SEWER, WATER OR DRAINAGE FLOWS 43
9.49 SCHEUDLING OF WORK 44
9.50 SPRINKLERS 44
9.51 LANDSCAPING 44
9.52 REMOVAL OF UNDERGROUND SERVICE ALERT (USA MARKINGS) 44
9.53 COST BREAK-DOWN FOR LUMP SUM ITEMS 45
9.54 SIGNING AND STRIPING SPECIFICATIONS 45
SECTION NO. 10 - ITEMS OF THE BID PROPOSAL 50
ITEM NO. 1 - PRECONSTRUCTION PHOTOGRAPHS 50
ITEM NO. 2 - PREPARE STORM WATER POLLUTION PREVENTION PLAN 50
ITEM NO. 3 - STORM WATER ANNUAL REPORT 50
ITEM NO. 4 - CONSTRUCTION SITE MANAGEMENT 70
ITEM NO. 5 - TRAFFIC CONTROL SYSTEMS 84
ITEM NO. 6 - CLEARING AND GRUBBING 90
ITEM NO. 7 - BOLLARD TO REMOVE 91
ITEM NO. 8 - TRAFFIC STRIPE & PAVEMENT MARKINGS TO REMOVE 91
ITEM NO. 9 - PAVEMENT MARKERS TO REMOVE 91
ITEM NO. 10 - PEDESTRIAN BOARDWALK TO REMOVE 92
ITEM NO. 11 - CONCRETE CURB, GUTTER AND SIDEWALK TO REMOVE 92
ITEM NO. 12 - CONCRETE CURB TO REMOVE 92
ITEM NO. 13 - CONCRETE VALLEY GUTTER TO REMOVE 92
ITEM NO. 14 - CONCRETE ISLAND TO REMOVE 92
ITEM NO. 15 - CONCRETE TUNNEL HEADWALL AND WINGWALLS TO REMOVE 92
ITEM NO. 16 - EXISTING FENCE TO REMOVE 93
ITEM NO. 17 - EXISTING GATE TO REMOVE 93
ITEM NO. 18 - STORM DRAIN INLET TO REMOVE 93
ITEM NO. 19 - PARKING BOOTH TO REMOVE 94
ITEM NO. 20 - PAY STATION SHELTER TO RELOCATE 94
ITEM NO. 21 - PURPLE MARTIN POLE TO RELOCATE 94
ITEM NO. 22 - STORM DRAIN PIPE TO ABANDON 94
ITEM NO. 23 - ROADWAY EXCAVATION AND GRADING 95
ITEM NO. 24 - AGGREGATE BASE CLASS 2 TO PLACE 95
ITEM NO. 25 - CURB AND GUTTER TYPE 1 TO CONSTRUCT 96
ITEM NO. 26 - CURB AND GUTTER TYPE 2 TO CONSTRUCT 96
ITEM NO. 27 - CURB TYPE 3 TO CONSTRUCT 96
ITEM NO. 28 - CURB TYPE 3 (MODIFIED) TO CONSTRUCT 97
ITEM NO. 29 - WHEEL STOP TO INSTALL 97
ITEM NO. 30 - PCC EDGE WALL TO CONSTRUCT 97
ITEM NO. 31 - CONCRETE STAIRWAY TO CONSTRUCT 98
ITEM NO. 32 - MINOR CONCRETE (VALLEY GUTTER) TO CONSTRUCT 98
ITEM NO. 33 - CONCRETE ISLAND TO CONSTRUCT 99
ITEM NO. 34 - 4" PCC SIDEWALK TO CONSTRUCT 99
ITEM NO. 35 - 4" COLORED PCC SIDEWALK TO CONSTRUCT 99
ITEM NO. 36 - PCC PEDESTRIAN WALKWAY TO CONSTRUCT 99
ITEM NO. 37 - TRUNCATED DOMES ON NEW RAMPS (36" X 48") 100
ITEM NO. 38 - TRUNCATED DOMES ON NEW RAMPS (36" X 60") 100

ITEM NO. 39 - CHAIN LINK FENCE TO INSTALL 100
ITEM NO. 40 - RAILROAD TRACK TO INSTALL 100
ITEM NO. 41 - PEDESTRIAN RAILING TO INSTALL 101
ITEM NO. 42 - PICKET FENCE TO INSTALL 104
ITEM NO. 43 - PEDESTRIAN BARRICADE TO INSTALL 104
ITEM NO. 44 - BOLLARDS TO INSTALL 105
ITEM NO. 45 - GUTTER DRAIN NO. 20 TO CONSTRUCT 105
ITEM NO. 46 - GUTTER DRAIN NO. 20 (MODIFIED) TO CONSTRUCT 105
ITEM NO. 47 - 3 INCH PVC STORM DRAIN PIPE TO INSTALL 106
ITEM NO. 48 - 12 INCH STORM DRAIN PIPE TO INSTALL 106
ITEM NO. 49 - SLURRY SEAL TYPE II TO PLACE 107
ITEM NO. 50 - COLD PLANE ASPHALT CONCRETE (0.17" MAX) 114
ITEM NO. 51 - HOT MIX ASPHALT (3/4") PAVEMENT TO PLACE 116
ITEM NO. 52 - HOT MIX ASPHALT (1/2") PAVEMENT TO PLACE 116
ITEM NO. 53 - ROADSIDE SIGN TO REMOVE 116
ITEM NO. 54 - ROADSIDE SIGN TO RELOCATE 117
ITEM NO. 55 - ROADSIDE SIGN TO PLACE 117
ITEM NO. 56 - THERMOPLASTIC TRAFFIC STRIPE TO PLACE 119
ITEM NO. 57 - THERMOPLASTIC PAVEMENT MARKING TO PLACE 119
ITEM NO. 58 - PAVEMENT MARKER TO PLACE 121
ITEM NO. 59 - PAINTED PAVEMENT STRIPE TO PLACE 122
ITEM NO. 60 - PAINTED STALL MARKINGS TO PLACE 122
ITEM NO. 61 - AUDIO BIRD CONTROL DEVICE TO INSTALL 123
ITEM NO. 62 - AUTOMATIC IRRIGATION SYSTEM TO INSTALL 124
ITEM NO. 63 - SOIL PREPARATION & FINISH GRADING 126
ITEM NO. 64 - SHRUBS TO PLANT 128
ITEM NO. 65 - LANDSCAPE MAINTENANCE 129
ITEM NO. 66 - PARKING LOT LIGHTING INSTALLATION 130
ITEM NO. 67 - PERMEABLE INTERLOCKING PAVERS 130
ITEM NO. 68 - MOBILIZATION 136
SECTION NO. 11 - ELECTRICAL PROVISIONS WHICH APPLY TO ALL ELECTRICAL ITEMS 136
11-1 ELECTRICAL COST BREAK-DOWN 136
11-2 CONDUIT MATERIAL 138
11-3 CONDUIT INSTALLATION 138
11-4 CONDUCTORS 140
11-5 INSPECTION 140
11-6 PARKING LOT LIGHT IN CITY'S PARKING LOT 141
11-7 PARKING LOT LIGHT IN CSJM STATE MUSEUM PARKING LOT 142
11-8 ORNAMENTAL STREETLIGHT IN CITY'S PARKING LOT 142
11-9 PULL BOXES 150
11-10 WIRING 151
SECTION NO. 12 - CONTRACT PROVISIONS FOR FEDERAL-AID CONSTRUCTION CONTRACTS 152
FHWA Form 1273 153
Final Report of Utilization of Disadvantaged Businesses (Exhibit 17-E) 167
Disadvantaged Business Enterprises (DBE) Certification Status (Exhibit 17-O) 169
SECTION NO. 13 - BID PROPOSAL FORMS 171
Bid Proposal Form 172
Bid Proposal Guarantee 179
Drug Free Workplace Policy and Affidavit 180
List of Subcontractors 181
Non-Discrimination in Employee Benefits Ordinance Certification 182
Minimum Qualifications Questionnaire 191
Equal Employment Opportunity Certification 197
Public Contract Code Section 10285.1 Statement 198
Public Contract Code Section 10162 Questionnaire 198
Public Contract Code Section 10232 Statement 199
Non Collusion Affidavit 200
Debarment and Suspension Certification 201
Nonlobbying Certification for Federal-Aid Contracts 202
Disclosure of Lobbying Activities Form and Instructions 203
Local Agency Bidder - DBE Commitment (Exhibit 15-G(1)) 205
DBE Information – Good Faith Efforts (Exhibit 15-H) 207
Excerpts from the California Labor Code Relating to Apprentices on Public Works 210
DUNS Form 211

Green Contracting Survey 212
Title VI Language 215
Bidders List (Exhibit 12-G, Part I & II) 217
SECTION NO. 14 - CONTRACT FORMS 219
Agreement 220
Payment Bond 237
Performance Bond 238
Worker's Compensation Certification 239
Construction & Demolition Debris Recycling Requirements 240
Pay Request Application 246
Schedule of Values 248
Guarantee 251
NTP Sample 252
SECTION NO. 15 - SCHEDULE OF WAGES 253
Exhibit A – Amtrak Cart Control Siteplan 296
Exhibit B – CalTrans Encroachment Permit Rider 297

SPECIAL PROVISIONS
FOR
WEST TUNNEL RAMPS ACCESS PROJECT

FEDERAL PROJECT NO.: HPLUL-5002(167)

(PN: T15029301)

SECTION NO. 1 - SPECIFICATIONS AND PLANS

The contract shall be administered in accordance with Sections 1 through 8 of the City Standard Specifications for Public Construction dated June 2007. The work to be performed under this contract shall be in accordance with the Special Provisions contained herein. The General Requirements of this contract shall be governed by these Special Provisions first, followed by Section 1 through Section 8 of the City Standard Specifications. Other standards or specifications specified in these Special Provisions govern only the applicable technical specifications for the items of work referenced.

In case of conflict in the technical provisions or requirements, the following order of precedence shall govern:

A. Special Provisions

B. Plans

C. City Standard Specifications

D. Other referenced specifications

E. State Standard Plans

Definitions of Terms

Whenever in the City Standard Specification, State Standard Specifications, Special Provisions, Notice to Contractors, Proposal, Contract or other contract documents the following abbreviations and terms are used, the intent and meaning shall be interpreted as follows:

DEFINITIONS AND TERMS
As used herein, unless the context otherwise requires, the following terms have the following meaning:

Department or Department of Transportation: The City of Sacramento, Department of Public Works.

Director or Director of Transportation: Director of Public Works, City of Sacramento.

Engineer: The Director of Public Works of the City of Sacramento, State of California, acting either directly or through properly authorized agents, such agents acting within the scope of the particular duties entrusted to them.

Laboratory: The established laboratory of the Materials and Research Department of the Department of Transportation of the State of California or laboratories authorized by the Engineer to test materials and work involved in the contract.

State or State of California: The City of Sacramento.

Transportation Building Sacramento: City Hall, City of Sacramento, State of California.

State Highway Engineer: The Director of Public Works of the City of Sacramento, State of California.

State Standard Specifications: Means the 2006 edition of the Standard Specifications of the State of California, Department of Transportation.

City Standard Specifications: Means the June 2007 edition of the City of Sacramento Standard Specifications.

Attorney General: City Attorney, City of Sacramento

Required Meetings: Means that all bidders are encouraged to attend required meetings, however bidders who do not attend shall be responsible for all information disseminated.

SECTION NO. 2 - PROPOSAL REQUIREMENTS AND CONDITIONS

2-1.01 GENERAL

The bidder's attention is directed to the provisions in Section 2, "Proposal Requirements and Conditions," of these Contract Specifications for the requirements and conditions which the bidder must observe in the preparation of the proposal form and the submission of the bid.

Each proposal shall have listed therein the portion of the work that will be done by each subcontractor listed. A sheet for listing the subcontractors is included in the Proposal.

In conformance with Public Contract Code Section 7106, a Noncollusion Affidavit is included in the Proposal. Signing the Proposal shall also constitute signature of the Noncollusion Affidavit.

The contractor, sub recipient or subcontractor shall not discriminate on the basis of race, color, national origin, or sex in the performance of this contract. The contractor shall carry out applicable requirements of 49 CFR part 26 in the award and administration of US DOT assisted contracts. Failure by the contractor to carry out these requirements is a material breach of this contract, which may result in the termination of this contract or such other remedy as the recipient deems appropriate. Each subcontract signed by the bidder must include this assurance.

2-1.015 FEDERAL LOBBYING RESTRICTIONS

Section 1352, Title 31, United States Code prohibits Federal funds from being expended by the recipient or any lower tier sub recipient of a Federal-aid contract to pay for any person for influencing or attempting to influence a Federal agency or Congress in connection with the awarding of any Federal-aid contract, the making of any Federal grant or loan, or the entering into of any cooperative agreement.

If any funds other than Federal funds have been paid for the same purposes in connection with this Federal-aid contract, the recipient shall submit an executed certification and, if required, submit a completed disclosure form as part of the bid documents.

A certification for Federal-aid contracts regarding payment of funds to lobby Congress or a Federal agency is included in the Proposal. Standard Form - LLL, "Disclosure of Lobbying Activities," with instructions for completion of the Standard Form is also included in the Proposal. Signing the Proposal shall constitute signature of the Certification.

The above referenced certification and disclosure of lobbying activities shall be included in each subcontract and any lower-tier contracts exceeding $100,000. All disclosure forms, but not certifications, shall be forwarded from tier to tier until received by the Engineer.

The Contractor, subcontractors and any lower-tier contractors shall file a disclosure form at the end of each calendar quarter in which there occurs any event that requires disclosure or that materially affects the accuracy of the information contained in any disclosure form previously filed by the Contractor, subcontractors and any lower-tier contractors. An event that materially affects the accuracy of the information reported includes:

(1) A cumulative increase if $25,000 or more in the amount paid or expected to be paid for influencing or attempting to influence a covered Federal action; or

(2) A change in the person(s) or individual(s) influencing or attempting to influence a covered Federal action; or

(3) A change in the officer(s), employees(s), or Member(s) contacted to influence or attempt to influence a covered Federal Action.

2-1.02 DISADVANTAGED BUSINESS ENTERPRISE (DBE)

This project is subject to Title 49 CFR 26.13(b):

> The contractor, sub recipient or subcontractor shall not discriminate on the basis of race, color, national origin, or sex in the performance of this contract. The contractor shall carry out applicable requirements of 49 CFR part 26 in the award and administration of DOT-assisted contracts. Failure by the contractor to carry out these requirements is a material breach of this contract, which may result in the termination of this contract or such other remedy as the recipient deems appropriate.

Take necessary and reasonable steps to ensure that DBEs have opportunity to participate in the contract (49 CFR 26).

To ensure there is equal participation of the DBE groups specified in 49 CFR 26.5, the Agency specifies a goal of **11.29%.**

Make work available to DBEs and select work parts consistent with available DBE subcontractors and suppliers.

Meet the DBE goal shown in the Notice to Contractors or demonstrate that you made adequate good faith efforts to meet this goal.

It is your responsibility to verify that the DBE firm is certified as DBE at date of bid opening. For a list of DBEs certified by the California Unified Certification Program, go to:

http://www.dot.ca.gov/hq/bep/find_certified.htm

Credit for materials or supplies you purchase from DBEs counts towards the goal in the following manner:

1. 100 percent counts if the materials or supplies are obtained from a DBE manufacturer.
2. 60 percent counts if the materials or supplies are obtained from a DBE regular dealer.
3. Only fees, commissions, and charges for assistance in the procurement and delivery of materials or supplies count if obtained from a DBE that is neither a manufacturer or regular dealer. 49 CFR 26.55 defines "manufacturer" and "regular dealer."

You receive credit towards the goal if you employ a DBE trucking company that performs a commercially useful function as defined in 49 CFR 26.55 (d)(1) through (4) and (6).

DBE Commitment Submittal

Submit DBE information on the "Local Agency Bidder-DBE Commitment (Construction Contracts)," Exhibit 15-G(1), form included in the Bid Proposal Forms section of these Special Provisions. If the form is not submitted with the bid, remove it before submitting your bid.

If the DBE Commitment form is not submitted with the bid, the apparent low bidder, the 2nd low bidder, and the 3rd low bidder must complete and submit the DBE Commitment form to the Agency. DBE Commitment form must be received by the Agency no later than 4:00 p.m. on the 4th business day after bid opening.

Other bidders do not need to submit the DBE Commitment form unless the Agency requests it. If the Agency requests you to submit a DBE Commitment form, submit the completed form within 4 business days of the request.

Submit written confirmation from each DBE stating that it is participating in the contract. Include confirmation with the DBE Commitment form. A copy of a DBE's quote will serve as written confirmation that the DBE is participating in the contract.

If you do not submit the DBE Commitment form within the specified time, the Agency finds your bid nonresponsive.

Good Faith Efforts Submittal

If you have not met the DBE goal, complete and submit the "DBE Information - Good Faith Efforts," Exhibit 15-H, form with the bid showing that you made adequate good faith efforts to meet the goal. Only good faith efforts directed towards obtaining participation by DBEs will be considered. If good faith efforts documentation is not submitted with the bid, it must be received by the Agency no later than 4:00 p.m. on the 4th business day after bid opening.

If your DBE Commitment form shows that you have met the DBE goal or if you are required to submit the DBE Commitment form, you must also submit good faith efforts documentation within the specified time to protect your eligibility for award of the contract in the event the Agency finds that the DBE goal has not been met.

Good faith efforts documentation must include the following information and supporting documents, as necessary:

1. Items of work you have made available to DBE firms. Identify those items of work you might otherwise perform with its own forces and those items that have been broken down into economically feasible units to facilitate DBE participation. For each item listed, show the dollar value and percentage of the total contract. It is your responsibility to demonstrate that sufficient work to meet the goal was made available to DBE firms.

2. Names of certified DBEs and dates on which they were solicited to bid on the project. Include the items of work offered. Describe the methods used for following up initial solicitations to determine with certainty if the DBEs were interested, and the dates of the follow-up. Attach supporting documents such as copies of letters, memos, facsimiles sent, telephone logs, telephone billing statements, and other evidence of solicitation. You are reminded to solicit certified DBEs through all reasonable and available means and provide sufficient time to allow DBEs to respond.
3. Name of selected firm and its status as a DBE for each item of work made available. Include name, address, and telephone number of each DBE that provided a quote and their price quote. If the firm selected for the item is not a DBE, provide the reasons for the selection.
4. Name and date of each publication in which you requested DBE participation for the project. Attach copies of the published advertisements.
5. Names of agencies and dates on which they were contacted to provide assistance in contacting, recruiting, and using DBE firms. If the agencies were contacted in writing, provide copies of supporting documents.
6. List of efforts made to provide interested DBEs with adequate information about the plans, specifications, and requirements of the contract to assist them in responding to a solicitation. If you have provided information, identify the name of the DBE assisted, the nature of the information provided, and date of contact. Provide copies of supporting documents, as appropriate.
7. List of efforts made to assist interested DBEs in obtaining bonding, lines of credit, insurance, necessary equipment, supplies, and materials, excluding supplies and equipment that the DBE subcontractor purchases or leases from the prime contractor or its affiliate. If such assistance is provided by you, identify the name of the DBE assisted, nature of the assistance offered, and date. Provide copies of supporting documents, as appropriate.
8. Any additional data to support demonstration of good faith efforts.

The agency may consider DBE commitments of the 2nd and 3rd bidders when determining whether the low bidder made good faith efforts to meet the DBE goal.

SECTION NO. 3 - AWARD AND EXECUTION OF CONTRACT

3-1.01 GENERAL

The bidder's attention is directed to the provisions in Section 3, "Award and Execution of Contract," of the City Standard Specifications and these special provisions for the requirements and conditions concerning award and execution of contract.

Bid protests are to be delivered to the following address: City of Sacramento, City Clerk's Office, Historic City Hall, 915 I St, Ste 116, Sacramento, CA 95814

The award of the contract, if it be awarded, will be to the lowest responsive and responsible bidder whose bid complies with all the requirements prescribed.

A "Local Agency Bidder-DBE Information (Construction Contracts), Exhibit 15-G(2)" form is included in the Bid Proposal to be executed by the successful bidder. The purpose of the form is to collect data required under 49 CFR 26. Even if no DBE participation will be reported, the successful bidder must execute and return the form.

The successful bidder's "Local Agency Bidder- Information (Construction Contracts), Exhibit 15-G(2)" form should include the names, addresses and phone numbers of DBE firms that will participate, with a complete description of work or supplies to be provided by each, and the dollar value of each DBE transaction. When 100 percent of a contract item of work is not to be performed or furnished by a DBE, a description of the exact portion of that work to be performed or furnished by that DBE should be included in the DBE information, including the planned location of that work. A successful bidder certified as a DBE should describe the work it has committed to performing with its own forces as well as any other work that it has committed to be performed by DBE subcontractors, suppliers and trucking companies.

The successful bidder is encouraged to provide written confirmation from each DBE that the DBE is participating in the contract. A copy of a DBE's quote will serve as written confirmation that the DBE is participating in the contract. If a DBE is participating as a joint venture partner, the successful bidder is encouraged to submit a copy of the joint venture agreement.

The "Local Agency Bidder-DBE Information (Construction Contracts), Exhibit 15-G(2)" form shall be completed and returned to the Agency by the successful bidder with the executed contract and contract bonds.
For the purposes of the form, payee shall be deemed to mean the successful bidder. The form is not to be completed for subcontractors or suppliers. Failure to complete and return the "Payee Data Record" form to the Agency as provided herein will result in the retention of 31 percent of payments due the contractor and penalties of up to $20,000. This retention of payments for failure to complete the "Payee Data Record" form is in addition to any other retention of payments due the Contractor.

SECTION NO. 4 - BEGINNING OF WORK, TIME OF COMPLETION AND LIQUIDATED DAMAGES

The Contractor shall begin work within 15 days after receiving a Notice to Proceed from the City of Sacramento.

The Contractor shall diligently prosecute the work to completion before the expiration of Fifty-five (55) Working Days beginning on the day designated in the Notice to Proceed. Work will be performed as specified in Section 9.3 "Order of Work" of these Special Provisions. .

Work completion includes all functional and acceptance tests to the satisfaction of the City. Should said work not be completed to the satisfaction of the City within said time, the Contractor shall pay to the City of Sacramento a sum of Two Thousand Dollars ($2,000.00) as liquidated damages for each working day delay after the expiration of such period until acceptance of the said work by the City and its delivery to the City.

Liquidated damages will also be assessed if the entire CSRM parking lot (that is in the scope of this project) is not available to park in after sixty days from the date of the NTP. **Should said CSRM parking lot not be available for parking, the Contractor shall pay to the City of Sacramento a sum of Two Thousand Dollars ($2,000.00) as liquidated damages for each calendar day delay after sixty days from the NTP until the entire CSRM parking lot (that is in the scope of this project) is available for parking.**

SECTION NO. 5 - GENERAL

5.1 LABOR NONDISCRIMINATION

Attention is directed to the following Notice that is required by Chapter 5 of Division 4 of Title 2, California Code of Regulations.

NOTICE OF REQUIREMENT FOR NONDISCRIMINATION PROGRAM (GOV. CODE, SECTION 12990)

Your attention is called to the "Nondiscrimination Clause", set forth in Section 7-1.01A(4), "Labor Nondiscrimination," of the State Standard Specifications, which is applicable to all nonexempt state contracts and subcontracts, and to the "Standard California Nondiscrimination Construction Contract Specifications" set forth therein. The Specifications are applicable to all nonexempt state construction contracts and subcontracts of $5,000 or more.

5.2 PREVAILING WAGE

Attention is directed to Section 7-1.01A(2), "Prevailing Wage," of the State Standard Specifications.

The general prevailing wage rates determined by the Director of Industrial Relations, for the county or counties in which the work is to be done, are available at the City of Sacramento. These wage rates are not included in the Proposal and Contract for the project. Changes, if any, to the general prevailing wage rates will be available at the same location.

Payment of prevailing wage must be documented through submission of certified payroll records for the prime contractor and lower tier subcontractors.
Electronic Web submittal of Labor Compliance Reports began effective May 1, 2007. Each contractor and every lower-tier subcontractor is be required to submit certified payrolls and labor compliance documentation electronically at the discretion of and in the manner specified by the City of Sacramento.

Electronic submittal will be a web-based system, accessed on the World Wide Web by a web browser. Each contractor and subcontractor will be given a Log On identification and password to access the City of Sacramento reporting system.

Use of the system may entail additional data entry of weekly payroll information including; employee identification, labor classification, total hours worked and hours worked on this project, wage and benefit rates paid, etc. The contractor's payroll and accounting software might be capable of generating a 'comma delimited file' that will interface with the software.

This requirement will be 'flowed down' to every lower-tier subcontractor and vendor required to provide labor compliance documentation.

5.3 TRAINING

There are no training requirements for this project.

5.4 PUBLIC SAFETY

The Contractor shall provide for the safety of traffic and the public in conformance with the provisions in Section 7-1.09, "Public Safety," of the State Standard Specifications and these special provisions.

The Contractor shall install temporary railing (Type K) between a lane open to public traffic and an excavation, obstacle or storage area when the following conditions exist:

A. Excavations. – The near edge of the excavation is 12 feet or less from the edge of the lane, except:

1. Excavations covered with sheet steel or concrete covers of adequate thickness to prevent accidental entry by traffic or the public.
2. Excavations less than 1 foot deep.
3. Trenches less than 1 foot wide for irrigation pipe or electrical conduit, or excavations less than 1foot in diameter.
4. Excavations parallel to the lane for the purpose of pavement widening or reconstruction.
5. Excavations in side slopes, where the slope is steeper than 1:4 (vertical: horizontal).
6. Excavations protected by existing barrier or railing.

B. Temporarily Unprotected Permanent Obstacles. – The work includes the installation of a fixed obstacle together with a protective system, such as a sign structure together with

protective railing, and the Contractor elects to install the obstacle prior to installing the protective system; or the Contractor, for the Contractor's convenience and with permission of the Engineer, removes a portion of an existing protective railing at an obstacle and does not replace such railing complete in place during the same day.

C. Storage Areas. – Material or equipment is stored within 12 feet of the lane and the storage is not otherwise prohibited by the provisions of the Standard Specifications and these special provisions.

The approach end of temporary railing (Type K), installed in conformance with the provisions in this section "Public Safety" and in Section 7-1.09, "Public Safety," of the State Standard Specifications, shall be offset a minimum of 15 feet from the edge of the traffic lane open to public traffic. The temporary railing shall be installed on a skew toward the edge of the traffic lane of not more than 1 foot transversely to 10 feet longitudinally with respect to the edge of the traffic lane. If the 15 feet minimum offset cannot be achieved, the temporary railing shall be installed on the 10 to 1 skew to obtain the maximum available offset between the approach end of the railing and the edge of the traffic lane, and an array of temporary crash cushion modules shall be installed at the approach end of the temporary railing.

Temporary railing (Type K) shall conform to the provisions in Section 12-3.08, "Temporary Railing (Type K)," of the State Standard Specifications. Temporary railing (Type K), conforming to the details shown on 2006 Standard Plan T3, may be used. Temporary railing (Type K) fabricated prior to January 1, 1993, and conforming to 1988 Standard Plan B11-30 may be used, provided the fabrication date is printed on the required Certificate of Compliance.

Temporary crash cushion modules shall conform to the provisions in "Temporary Crash Cushion Module" of these special provisions.

When traffic cones or delineators are used to delineate a temporary edge of a traffic lane, the line of cones or delineators shall be considered to be the edge of the traffic lane, however, the Contractor shall not reduce the width of an existing lane to less than 12 feet without written approval from the Engineer.

When work is not in progress on a trench or other excavation that required closure of an adjacent lane, the traffic cones or portable delineators used for the lane closure shall be placed off of and adjacent to the edge of the traveled way. The spacing of the cones or delineators shall be not more than the spacing used for the lane closure.

Suspended loads or equipment shall not be moved nor positioned over public traffic or pedestrians.

Full compensation for conforming to the provisions in this section "Public Safety," including furnishing and installing temporary railing (Type K) and temporary crash cushion modules, shall be considered as included in the contract prices paid for the various items of work involved and no additional compensation will be allowed therefor.

5.5 BUY AMERICA REQUIREMENTS

Attention is directed to the "Buy America" requirements of the Surface Transportation Assistance Act of 1982 (Section 165) and Section 1518 of MAP-21 of October 1, 2012, and the regulations adopted pursuant thereto. In conformance with the law and regulations, all manufacturing processes for steel and iron materials furnished for incorporation into the work on this project shall occur in the United States; with the exception that pig iron and processed, pelletized and reduced iron ore manufactured outside of the United States may be used in the domestic manufacturing process for such steel and iron materials. The application of coatings, such as epoxy coating, galvanizing, painting, and other coating that protects or enhances the value of steel or iron materials shall be considered a manufacturing process subject to the "Buy America" requirements.

A Certificate of Compliance, conforming to the provisions in Section 6-1.07, "Certificates of Compliance," of the State Standard Specifications, shall be furnished for steel and iron materials. The certificates, in addition to certifying that the materials comply with the specifications, shall specifically certify that all manufacturing processes for the materials occurred in the United States, except for the above exceptions.

The requirements imposed by the law and regulations do not prevent a minimal use of foreign steel and iron materials if the total combined cost of the materials used does not exceed one-tenth of one percent (0.1 percent) of the total contract cost or $2,500, whichever is greater. The Contractor shall furnish the Engineer acceptable documentation of the quantity and value of the foreign steel and iron prior to incorporating the materials into the work.

5.6 REMOVAL OF ASBESTOS AND HAZARDOUS SUBSTANCES

When the presence of asbestos or hazardous substances are not shown on the plans or indicated in the specifications and the Contractor encounters materials which the Contractor reasonably believes to be asbestos or a hazardous substance as defined in Section 25914.1 of the Health and Safety Code, and the asbestos or hazardous substance has not been rendered harmless, the Contractor may continue work in unaffected areas reasonably believed to be safe. The Contractor shall immediately cease work in the affected area and report the condition to the Engineer in writing.

In conformance with Section 25914.1 of the Health and Safety Code, removal of asbestos or hazardous substances including exploratory work to identify and determine the extent of the asbestos or hazardous substance will be performed by separate contract.

If delay of work in the area delays the current controlling operation, the delay will be considered a right of way delay and the Contractor will be compensated for the delay in conformance with the provisions in Section 8-1.09, "Right of Way Delays," of the State Standard Specifications.

5.7 SUBCONTRACTOR AND DBE RECORDS

Use each DBE subcontractor as listed on the List of Subcontractors form and the Local Agency Bidder DBE Commitment (Construction Contracts), Exhibit 15-G, forms unless you receive authorization for a substitution.
The Agency requests the Contractor to:

1. Notify the Engineer of any changes to its anticipated DBE participation
2. Provide this notification before starting the affected work

Maintain records including:

1. Name and business address of each 1st-tier subcontractor
2. Name and business address of each DBE subcontractor, DBE vendor, and DBE trucking company, regardless of tier
3. Date of payment and total amount paid to each business

If you are a DBE contractor, include the date of work performed by your own forces and the corresponding value of the work.

Before the 15th of each month, submit a Monthly DBE Trucking Verification form.

If a DBE is decertified before completing its work, the DBE must notify you in writing of the decertification date. If a business becomes a certified DBE before completing its work, the business must notify you in writing of the certification date. Submit the notifications. On work completion, complete a Disadvantaged Business Enterprises (DBE) Certification Status Change, Exhibit 17-O, form. Submit the form within 30 days of contract acceptance.

Upon work completion, complete a Final Report – Utilization of Disadvantaged Business Enterprises (DBE), First-Tier Subcontractors, Exhibit 17-F, form. Submit it within 90 days of contract acceptance. The Agency withholds $10,000 until the form is submitted. The Agency releases the withhold upon submission of the completed form.

5.8 PERFORMANCE OF DISADVANTAGED BUSINESS ENTERPRISES

DBEs must perform work or supply materials as listed in the "Local Agency Bidder - DBE Commitment" form specified under Section 2, "Proposal Requirements and Conditions," of these special provisions. Do not terminate a DBE listed subcontractor for convenience and perform the work with your own forces or obtain materials from other sources without prior written authorization from the Agency.

The Agency grants authorization to use other forces or sources of materials for requests that show any of the following justifications:

1. Listed DBE fails or refuses to execute a written contract based on plans and specifications for the project.
2. You stipulate a bond is a condition of executing the subcontract and the listed DBE fails to meet your bond requirements.
3. Work requires a contractor's license and listed DBE does not have a valid license under Contractors License Law.
4. Listed DBE fails or refuses to perform the work or furnish the listed materials.
5. Listed DBE's work is unsatisfactory and not in compliance with the contract.
6. Listed DBE is ineligible to work on the project because of suspension or debarment.
7. Listed DBE becomes bankrupt or insolvent.
8. Listed DBE voluntarily withdraws with written notice from the Contract

9. Listed DBE is ineligible to receive credit for the type of work required.
10. Listed DBE owner dies or becomes disabled resulting in the inability to perform the work on the Contract.
11. Agency determines other documented good cause.

Notify the original DBE of your intent to use other forces or material sources and provide the reasons. Provide the DBE with 5 days to respond to your notice and advise you and the Agency of the reasons why the use of other forces or sources of materials should not occur. Your request to use other forces or material sources must include:

1. 1 or more of the reasons listed in the preceding paragraph
2. Notices from you to the DBE regarding the request
3. Notices from the DBEs to you regarding the request

If a listed DBE subcontractor is terminated, you must make good faith efforts to find another DBE subcontractor to substitute for the original DBE. The substitute DBE must perform at least the same amount of work as the original DBE under the contract to the extent needed to meet the DBE goal.

The substitute DBE must be certified as a DBE at the time of request for substitution.

Unless the Agency authorizes (1) a request to use other forces or sources of materials or (2) a good faith effort for a substitution of a terminated DBE, the Agency does not pay for work listed on the Local Agency Bidder DBE Commitment (Construction Contracts), Exhibit 15-G, form unless it is performed or supplied by the listed DBE or an authorized substitute.

5.9 SUBCONTRACTING

No subcontract releases the Contractor from the contract or relieves the Contractor of their responsibility for a subcontractor's work.

If the Contractor violates Pub Cont Code § 4100 et seq., the City of Sacramento may exercise the remedies provided under Pub Cont Code § 4110. The City of Sacramento may refer the violation to the Contractors State License Board as provided under Pub Cont Code § 4111.

The Contractor shall perform work equaling at least 30 percent of the value of the original total bid with the Contractor's own employees and equipment, owned or rented, with or without operators.

Each subcontract must comply with the contract.

Each subcontractor must have an active and valid State contractor's license with a classification appropriate for the work to be performed (Bus & Prof Code, § 7000 et seq.).

Submit copies of subcontracts upon request by the Engineer.

Before subcontracted work starts, submit a Subcontracting Request form.

Do not use a debarred contractor; a current list of debarred contractors is available at the Department of Industrial Relations' Web site.

Upon request by the Engineer, immediately remove and not again use a subcontractor who fails to prosecute the work satisfactorily.

Each subcontract and any lower tier subcontract that may in turn be made shall include the "Required Contract Provisions Federal-Aid Construction Contracts" in Section 14 of these special provisions. Noncompliance shall be corrected. Payment for subcontracted work involved will be withheld from progress payments due, or to become due, until correction is made. Failure to comply may result in termination of the contract.

5.10 PROMPT PROGRESS PAYMENT TO SUBCONTRACTORS

A prime contractor or subcontractor shall pay any subcontractor not later than 10 days of receipt of each progress payment in accordance with the provision in Section 7108.5 of the California Business and Professions Code concerning prompt payment to subcontractors. The 10 days is applicable unless a longer period is agreed to in writing. Any delay or postponement of payment over 30 days may take place only for good cause and with the agency's prior written approval. Any violation of Section 7108.5 shall subject the violating contractor or subcontractor to the penalties, sanction and other remedies of that section. This requirement shall not be construed to limit or impair any contractual, administrative, or judicial remedies otherwise available to the contractor or subcontractor in the event of a dispute involving late payment or nonpayment by the prime contractor, deficient subcontract performance, or noncompliance by a subcontractor. This provision applies to both DBE and non-DBE subcontractors.

5.11 PROMPT PAYMENT OF FUNDS WITHHELD TO SUBCONTRACTORS

The agency shall hold retainage from the prime contractor and shall make prompt and regular incremental acceptances of portions, as determined by the agency, of the contract work, and pay retainage to the prime contractor based on these acceptances. The prime contractor, or subcontractor, shall return all monies withheld in retention from a subcontractor within 30 days after receiving payment for work satisfactorily completed and accepted including incremental acceptances of portions of the contract work by the agency. Federal law (49CFR26.29) requires that any delay or postponement of payment over 30 days may take place only for good cause and with the agency's prior written approval. Any violation of this provision shall subject the violating prime contractor or subcontractor to the penalties, sanctions and other remedies specified in Section 7108.5 of the Business and Professions Code. These requirements shall not be construed to limit or impair any contractual, administrative, or judicial remedies otherwise available to the prime contractor or subcontractor in the event of a dispute involving late payment or nonpayment by the prime contractor, deficient subcontract performance, or noncompliance by a subcontractor. This provision applies to both DBE and non-DBE prime contractors and subcontractors.

5.12 PAYMENTS

In addition to Section 8, "Measurement and Payment" of the City Standard Specifications and these special provisions, the contractor shall submit itemized breakdowns for all lump sum items of work on the bid proposal form, prior to construction.

After acceptance of the contract pursuant to the provisions in Section 8 of the City Standard Specifications, the amount, if any, payable for a contract item of work in excess of the maximum value for progress payment purposes herein above listed for the item, will be included for payment in the first estimate made after acceptance of the contract.

No partial payment will be made for any materials on hand which are furnished but not incorporated in the work.

5.13 ENCROACHMENT PERMIT

A portion of the work to be performed in this project is located within the rights of way of the State of California. The City has received an encroachment permit to construct the project in State right of way. A copy of the Encroachment Permit Rider is included with these contract documents as Exhibit B. The Contractor shall perform the work in conformance with the requirements in the permit.

Attention is directed to Sections 7-1.11, "Preservation of Property," of the State Standard Specifications.

Any change in the conditions listed in the permit proposed by the Contractor shall be submitted to the Engineer for transmittal to the State of California Department of Transportation for their approval. Changes shall not be implemented until approved in writing by the State of California Department of Transportation.

In addition to traffic control devices, the Contractor shall comply with all conditions of the Caltrans Stormwater Permit for construction activities within the State right of way.

Full compensation for conforming to the requirements in this permit shall be considered as included in the contract prices paid for the various item or work and no additional compensation will be allowed therefor.

SECTION NO. 6 - (BLANK)

SECTION NO. 7 - WORKER'S COMPENSATION AND INSURANCE

7.1 WORKER'S COMPENSATION

Full Worker's Compensation Insurance and Employer's Liability policy or provide evidence of ability to undertake self-insurance. Limits of coverage shall be at least $1,000,000 for any one person. In the event Contractor is self-insured, he shall furnish a Certificate of Permission to Self-Insure by the Department of Industrial Relations Administration of Self-Insurance, Sacramento.

7.2 COMPREHENSIVE AUTO AND GENERAL LIABILITY INSURANCE

Contractor must provide sufficient broad coverage to include:

- Comprehensive Auto and General Liability Insurance

- Products and Completed Operation Liability
- Broad Form Property Damage Liability
- Contractual Liability
- Personal Injury Liability

The amount of the policy shall be no less than $1,000,000 Single Limit per occurrence, insured by an admitted insurer or insurers as defined by the California Insurance Code, providing that the City of Sacramento, its officers, employees and agents are to be Named Insured under the policy, and the policy shall stipulate that this insurance will operate as Primary insurance and that no other insurance effected by City or other named Insured will be called on to contribute to a loss covered thereunder.

7.3 CERTIFICATE OF INSURANCE

Contractor shall have City's standard Certificate of Insurance completed and filed with the Department of Transportation prior to the execution of the execution of this Agreement. Said policies shall provide that no cancellation, major change in coverage, or expiration may be effected by the insurance company or the insured during the term of this Agreement, without first giving to City thirty (30) calendar days written notice prior to the effective date of such cancellation or change in coverage.

7.4 WORKER'S COMPENSATION CERTIFICATE

Contractor shall have this certification completed and filed with the Department of Transportation prior to the execution of the Agreement.

"I am aware of the provisions of Section 3700 of the Labor Code which require every employer to be insured against liability for worker's compensation or to undertake self-insurance in accordance with the provisions of the Code, and I will comply with such provisions before commencing the performance of the work of this Contract."

7.5 FAILURE TO MAINTAIN INSURANCE

If at any time during the performance of this Contract the Contractor fails to maintain any item of the required insurance in full force and effect, Contractor shall immediately discontinue all work under the Contract and City will withhold all Contract payments due or that become due until notice is received by City that such insurance has been restored in full force and effect and that the premiums therefore have been paid for a period satisfactory to the Division of Risk Management of the City of Sacramento.

Any failure to maintain any item of the required insurance will be sufficient cause for termination of the Contract.

SECTION NO. 8 - MATERIALS (BLANK)

SECTION NO. 9 - GENERAL REQUIREMENTS

9.1 SCOPE AND LOCATION OF WORK

The following items of work are to be performed in these Special Provisions:

In general, of improvements to the sidewalks at the intersection of 2nd Street at I Street and improvements to the Amtrak Railroad Station and California State Railroad Museum Parking Lots, including constructing new curbs, gutters and sidewalks, and new pavement section, pavement resurfacing, signing and striping, landscaping, and parking lot lighting improvements.

9.2 SPECIFICATIONS

The work to be performed under this contract shall be in accordance with the Special Provisions contained herein. In these Special Provisions, reference is made to the City Standard Specifications of the City of Sacramento, adopted June 2007, referred to herein as "Standard Specifications" and any amendments. The General Requirements of this contract shall be governed by these Special Provisions first, followed by Section 1 through Section 8 of the Standard Specifications. Other standards or specifications specified in these Special Provisions govern only the applicable technical specifications unless otherwise specified in these Special Provisions.

9.3 ORDER OF WORK

No work will be allowed on the project site during the following events:

1. St. Patrick's Parade and Festival – Saturday, March 16, 2013 (8 a.m. to 4 p.m.)
2. Pacific Rim Festival – Saturday, May 18 and Sunday, May 19, 2013 (2 days)
3. Jazz Jubilee – Thursday, May 23 through Monday, May 27, 2013 (5 days)
4. Pony Express Re-ride – Friday June 21, 2013 (can re-open lot by 1 p.m.)
5. Gold Rush Days – Friday, August 30 through Monday, September 2, 2013 (4 days)

Order of work shall conform to the provisions in Section 5-1.05, "Order of Work," of the State Standard Specifications and these special provisions.

All work in the CSRM parking lot is to be completed by sixty calendar days from the date of the NTP. The CSRM parking lot is to be useable after sixty calendar days from the date of the NTP per section or liquidated damages will be assessed per SECTION NO. 4 - BEGINNING OF WORK, TIME OF COMPLETION AND LIQUIDATED DAMAGES.

The contractor shall schedule the contract work to minimize impacts to parking within the Amtrak parking area.

The remaining items of work shall be performed during the normal working hours for the project Monday through Friday, except where specified per the Caltrans encroachment permit, or as determined by the Engineer.
Nonconflicting work in subsequent stages may proceed concurrently with work in preceding stages, provided satisfactory progress is maintained in the preceding stages of construction.
In each stage, after completion of the preceding stage, the first order of work shall be the removal of existing pavement delineation as directed by the Engineer. Pavement delineation removal shall be coordinated with new delineation so that lane lines are provided at all times on traveled ways open to public traffic.

Before removing any pavement delineation (traffic stripes, pavement markings, and pavement markers) that is to be replaced on the same alignment and location, as determined by the Engineer, the pavement delineation shall be referenced by the Contractor, with a sufficient number of control points to reestablish the alignment and location of the new pavement delineation. The references shall include the limits or changes in striping pattern, including one- and 2-way barrier lines, limit lines, crosswalks and other pavement markings. Full compensation for referencing existing pavement delineation shall be considered as included in the contract prices paid for new pavement delineation and no additional compensation will be allowed therefor.

Prior to applying HMA or Bituminous Seal, the Contractor shall cover all manholes, valve and monument covers, grates, or other exposed facilities located within the area of application, using a plastic or oil resistant construction paper secured to the facility being covered by tape or adhesive. The covered facilities shall be referenced by the Contractor, with a sufficient number of control points to relocate the facilities after the HMA and Slurry Seal has been placed. After completion of the HMA and Bituminous Seal operations, all covers shall be removed and disposed of in a manner satisfactory to the Engineer. Full compensation for covering manholes, valve and monument covers, grates, or other exposed facilities, referencing, and removing temporary cover shall be considered as included in the contract price paid per unit for HMA (Type A) and no additional compensation will be allowed therefor.

The Contractor shall schedule and perform work under the following parameters:

1) Staging of the project shall comply with these Special Provisions, City Standard Specifications, State Standard Specifications, the project plans, and as directed by the Engineer.

2) The Contractor staging area is to be kept in a neat appearance at all times.

3) Construction activities conflicting with the approved schedule may not proceed unless authorized by the Engineer. Non-conflicting work may proceed at any time.

4) At those locations exposed to public traffic where guard railings or barriers are to be constructed, reconstructed, or removed and replaced, the Contractor shall schedule

operations so that at the end of each working day there shall be no post holes open nor shall there be any railing or barrier posts installed without the blocks and rail elements assembled and mounted thereon.

9.4 COMPLETION TIME

The time limit for the completion of all items of work is Fifty-five (55) Working Days, commencing on the date set forth in the written Notice to Proceed issued by the City to the Contractor. The Contractor shall pay a sum in the amount of **TWO THOUSAND DOLLARS ($2,000.00)** as liquidated damages, and not as a penalty, for each working day delay after the expiration of Fifty-five (55) Working Days.

The notice to proceed date for Construction is scheduled for February 26, 2014.

The Engineer will furnish the Contractor a weekly statement showing the number of working days charged to the contract for the preceding week and the number of working days charged to date. The Contractor will be allowed fifteen (15) calendar days in which to file a written protest setting forth in what respect the Contractor disagrees with the working day statement, otherwise the working day statement of the Engineer shall be deemed to have been accepted by the Contractor as correct.

9.5 PROVIDING BONDS AND SURETY

The Contractor shall provide signed agreement and surety bonds within ten (10) calendar days after receipt of notice to award by the City and prior to award by the City Council. The Contractor shall be reimbursed for all surety bond costs should the City Council not award a contract.

9.6 PRE-BID INTERPRETATION OF CONTRACT DOCUMENTS

No oral representations or interpretation will be made to any bidder as to the meaning of the contract documents. Requests for interpretation shall be made in writing and delivered to the City at least seven (7) calendar days before the time announced for opening the proposals. Interpretation, where necessary, will be made by the City in the form of an addendum to the contract documents and, when issued, will be sent as promptly as is practicable to all parties to whom the bid documents have been issued. All such addenda shall become part of the contract. Requests for information regarding this procedure or other similar information, shall be directed to Marc Lee of the Department of Public Works, Engineering Services Division, 915 I Street, Room 2000, Sacramento, CA 95814, (916) 808-7481, FAX (916) 448-8450 or mlee@cityofsacramento.org.

It shall also be the bidder's responsibility to call to the attention of the Engineer any missing pages or drawings in the contract documents including the addenda. These items shall be brought to the attention of the Engineer immediately but at least two (2) weeks prior to the bid opening date.

9.7 NO TRUCK HAUL ROUTE ON 28TH STREET SOUTH OF E STREET

The Contractor and its subcontractors must not use 28th Street south of E Street as part of any haul route to and from the Bell Marine Co., Inc. / Harbor Sand and Gravel located at 200 28th Street. Acceptable routes to and from the facility are as follows:

To enter facility:

North on 30th Street
West on E Street
North on 28th Street

To exit facility:

South on 28th Street
East on C Street
South on 29th Street

The Contractor shall be assessed an administrative penalty of $500 for each Contractor or subcontractor dump truck that uses 28th Street South of E Street to enter or exit the Bell Marine Co., Inc/Harbor Sand and Gravel.

9.8 CERTIFICATE OF COMPLIANCE

The Contractor shall provide the Engineer with a manufacturer's "Certificate of Compliance" at the Engineer's request within two weeks. The Certificate of Compliance shall clearly show that the material, equipment and/or work is in compliance with the tests and specifications set forth in these contract documents.

9.9 FINAL PAY QUANTITY

Final pay quantity is designated on the sealed bid proposal sheet with a "(F)". Final pay quantity shall conform to Section 9-1.015 "Final Pay Items" of the State Standard Specifications, except that the final pay quantity designation shall be made on the sealed bid proposal rather than the Plans.

9.10 EQUIPMENT TO BE SUPPLIED

All equipment, material and supplies called for in the specifications shall be new and currently manufactured items, unless otherwise specified. All equipment shall be complete and in operation to the satisfaction of the Engineer at the time of acceptance of the work.

All incidental parts which are not shown on the Plans or specified herein and which are necessary to complete the project shall be furnished and installed as though such parts were shown on the Plans or specified herein.

9.11 HANDLING AND REMOVAL OF HAZARDOUS OR CONTAMINATED MATERIALS

In the event hazardous or contaminated materials are encountered at the site for which separate handling or removal provisions have not been made in these Special Provisions, the Contractor shall stop work on that item, contact the Engineer and schedule his operations to work elsewhere on the site if possible. The City will be responsible for handling and removal of hazardous material or may request that the Contractor shall be available, through contract change order, to provide additional services as needed for the completion of the work. Additional services may consist of retaining a subcontractor who possesses a California license for hazardous substance removal and remedial actions.

Hazardous or contaminated materials may only be removed and disposed of from the project site in accordance with the following provisions:

1. All work is to be completed in accordance with the following regulations and requirements:

    a. Chapter 6.5, Division 20, California Health and Safety Code.

    b. California Administration Code, Title 22, relating to Handling, Storage, and Treatment of Hazardous Materials. 29 Code of Federal Regulation 1910.120 relating to Hazardous Waste Operation Safety Training.

    c. City of Sacramento Building Code and the current edition of the Uniform Building Code.

2. Coordination shall be made with the County of Sacramento Environmental Management Department, Hazardous Materials Division, and the necessary applications shall be filed.

3. All hazardous materials shall be disposed of at an approved disposal site and shall only be hauled by a current California registered hazardous waste hauler using correct manifesting procedures and vehicles displaying a current Certificate of Compliance. The Contractor shall identify by name and address the site where toxic substances shall be disposed of. NO payment for removal and disposal services shall be made without a valid certificate from the approved disposal site that the material was delivered.

None of the aforementioned provisions shall be construed to relieve the Contractor from the Contractor's responsibility for the health and safety of all persons (including employees) and from the protection of property during the performance of the work. This requirement shall be applied continuously and not be limited to normal working hours.

9.12 COORDINATION

The Contractor shall coordinate his activities in a manner that will provide the least interference with the City's operations, other contractors and utility companies working in the area, and agencies exercising jurisdiction over the project area or portions thereof.

1. At a minimum the Contractor shall coordinate his operations with the following:

- City Traffic Signal and Street Lighting Maintenance Shop
  Contractor shall notify Norm Colby, via the Resident Engineer, a minimum of five (5) working days before any electrical work begins at 808-6635.

- City Fire Alarm
  Contractor shall notify Doug Crawford, at 798-0673 or 277-6133, a minimum of five (5) working days prior to beginning work at each location.

- Underground Service Alert
  Contractor shall contact Underground Service Alert (USA) at 1-800-227-2600, a minimum of three (3) working days prior to any excavation.

- Sacramento Municipal Utility District (SMUD)
  Contractor shall contact Michelle Zuniga, SMUD, at (916) 732-5726, at least 1 month before service hook-up is required, before service disconnect is required, before pole quadrants for risers need to be marked, before any poles need to be stood by SMUD, or before any overhead line heights need to be measured.

- Pacific Bell
  Contractor shall contact Astrid Willard at (916) 453-6136 forty-eight hours (48) before service hook-up is required, before service disconnect is required, before pole quadrants for risers need to be marked, before any poles need to be stood by Pacific Bell, or before any overhead line heights need to be measured.

- Pacific Gas and Electric (PG&E)
  Contractor shall contact David Allen, Senior Field Engineer Technician for PG&E, at (916) 386-5277, and Larry Schlaht at (916) 386-5371 at least 7 calendar days before start of construction.

2. A minimum of seven (7) calendar days prior to commencing work, the Contractor shall coordinate operations with the following City Divisions:

   - City Public Media and Communications Specialist, Linda Tucker (808-7523).

   - Businesses within the REA building

   - Amtrak Station

   - Railroad Museum (445-1705)

The Contractor shall be responsible for any garden refuse piles, which are inadvertently placed in the street between the time of City pickup and the Contractor's work. The cost for removing garden refuse piles shall be included in the unit prices bid for the various items of the proposal.

The cost of coordination shall be included in the unit prices bid for the various items of the proposal and no additional compensation will be allowed therefor.

9.13 AMTRAK CART CONTROL COORDINATION

Amtrak has a cart control system in the depot parking lot. The location of the wire for the cart control system is shown in Exhibit A of these specifications.

Amtrak must be notified one month before construction begins so they can make arrangements for their cart control system and replace the wires needed for their system before new paving is placed. Otherwise, Contractor will be responsible for removing and replacing the cart control wire.

Amtrak's contact for cart control coordination is the following:

Tyler Demetral
Tel: 949.271.3824
Mobile: 949.800.9580
Fax: 805.594.1011
tdemetral@gatekeepersystems.com

9.14 PROJECT SCHEDULING

The Contractor shall submit to the Engineer a practicable progress schedule and a schedule of values at the pre-construction meeting and within 5 days of the Engineer's written request at any other time. The Contractor shall furnish the schedules on a form of his choice. The progress schedule shall show the order in which the Contractor proposes to carry out the work, the dates on which he will start the features of the work and the contemplated dates for completion of the work. The schedule of values is submitted for use in determining progress payments. The progress schedules submitted shall be consistent in all respects with the time and order of work requirements of the contract.

The Contractor shall submit, review and update a project schedule in accordance with Section 7-2 of the Standard Specifications. Subsequent to the time that submittal of a progress schedule and a schedule of values is required in accordance with these specifications, no progress payments will be made prior to the submittal of an acceptable project schedule.

9.15 PROTECTION OF EXISTING IMPROVEMENTS

The location, alignment, and depth of existing underground utilities as shown on the Plans are taken from public records and no responsibility is assumed for their accuracy.

The Contractor's attention is directed to the provisions of Chapter 3.1 "PROTECTION OF PUBLIC UTILITIES IN PUBLIC CONTRACTS" of the California Government Code concerning protecting existing overhead and underground utilities. In particular, Section 4216 and Section 4217.

Existing improvements, utilities and adjacent property shall be protected from damage resulting from the Contractor's operations. All trees, shrubbery, grass, fences, mail boxes, walls and other improvements including existing pavements, sidewalks, street improvements, sprinkler systems

and underground utilities and other improvements not to be removed under this contract shall be protected from damage by the Contractor throughout the construction period.

All painted or other disfiguring markings on the pavement, sidewalk or gutters shall be removed by the Contractor before acceptance of the work.

The Contractor will insure that utility services to customers in the project are maintained.

The Contractor is responsible for the protection of and for damage to existing overhead and underground utility lines and services encountered during the course of construction. The Contractor shall notify the respective utility owner prior to any interruption of service.

The Contractor is expected to "pothole" existing underground utilities a minimum of ten (10) working days in advance at any location where an existing utility may be in conflict with the proposed work.

The cost of relocating existing overhead or underground utilities not specified on Plans to be relocated, but which the Contractor elects to relocate or cut and reconnect for his/her own convenience, shall be borne by the Contractor.

No compensation will be paid to the Contractor for the maintenance and protection of existing utilities and facilities. The cost of such work shall be included in whatever bid item the Contractor deems appropriate.

9.16 TRAFFIC HANDLING, PUBLIC SAFETY AND CONVENIENCE

The contractor's attention is directed to Sections 6 and 7 of the Standard Specifications.

The contractor shall adhere to guidelines as stated in Section 12.20.030 of Title 12 of the Sacramento City Code pertaining to Traffic Control Plan – Requirements, and shall conform to the current edition of the California MUTCD. Particular attention is directed to Chapter 6D – Pedestrian and Worker Safety and Chapter 6F – Temporary Traffic Control Zone Devices, Section 6F.68 – Detectable Edging for Pedestrians.

Spillage resulting from hauling operations along or across any public traveled way shall be removed immediately by the Contractor at his expense.

Construction operations shall be conducted in such a manner as to cause as little inconvenience as to abutting property owners.

Driveway access shall remain open at all times unless approved by the Engineer. If a property has more than one driveway, then the Contractor shall contact the property owner to coordinate a schedule for driveway closures.

Roadway excavation and the construction of embankments shall be conducted in such a manner as to provide a reasonably smooth and even surface satisfactory for use by public traffic at all times. Skid resistance steel plates or other approved methods shall be used to cover all open excavations in the roadways and sidewalks at all times during construction

Water or dust palliative shall be applied as required or as directed by the Engineer for the alleviation and prevention of dust nuisance. This requirement shall apply for the full duration of the contract and is not limited to working days.

The contractor shall ensure the utility services to customers in the project are maintained.

Sufficient traffic control devices, including signs and flaggers, shall be utilized to route traffic and minimize impacts on the general public.

The contractor shall submit to the Engineer for review and approval a plan showing traffic control measures for vehicles, pedestrians and bicycles affected by the construction work.

For emergency purposes, the responsible person in charge of the work must be reachable by phone 24 hours a day during the progress of the work. A 24-hour phone number shall be indicated on the permit application.

Skid resistant steel plates or other approved methods shall be used to cover all open excavations in the roadways and sidewalks at all times during construction.

The plans shall be developed with the following requirements:

1. Working hours shall be between 8:30 AM and 4:00 PM Monday through Friday, unless otherwise approved by the Engineer.

2. Weekend work from 8:30 am to 5:30 pm may be approved by the Engineer.

3. The Contractor shall submit for approval, a written request to perform weekend work a minimum of two (2) weeks prior to the weekend dates. If weekend work is approved, the cost of inspection shall be borne by the City.

4. If necessary, only one travel lane may be closed with flagpersons on **I Street and on 2nd Street** to complete the proposed improvements near the intersection.

5. The Contractor shall furnish, install temporary stripes and maintain temporary construction warning signs, lighting, flaggers, barricades, striping and other devices necessary to safeguard the general public and the work, and to provide for the safe and proper routing of all vehicular and of pedestrian traffic within and through the limits of the projects during the construction. The requirement shall apply continuously and shall not be limited to normal working hours.

6. The Contractor shall maintain existing electrical facilities and traffic and public safety in accordance with Section 34 of the Standard Specifications and these Special Provisions.

7. Residential driveways may only be closed after giving property owners 24 hour notice in advance of the closure. Driveways may only be closed during normal work periods and

while the contractor is actively pursuing work which requires the driveway to be closed, except when forms are in place, or while concrete is being cured.

8. Commercial driveways shall remain open at all times. The Contractor shall schedule the commercial driveways to be poured in two phases unless more than one driveway is available to the property. The Contractor shall coordinate the driveway closure with property owners' 5 calendar days in advance.

9. All work within public streets and/or roadway right-of-way shall be done in an expeditious manner so as to cause as little inconvenience to the traveling public as possible. Skid-resistant steel plates or other approved methods shall be used to cover all open excavations in the roadway during non-working hours.

9.17 NIGHT TIME WORK

Night time paving or night time work shall conform to the requirements in "Construction Area Traffic Control," Section 6-14, "Traffic Control Plans (TCP)," of the City Standard Construction Specifications, these Special Provisions and as directed by the Engineer.

The Contractor shall submit a Traffic Control Plan for the night time work to the Engineer for approval. The Traffic Control Plan shall include provisions for adequate lighting, changeable message signs stating expected delays with dates and times, additional night time changeable message signs, and other devices and details necessary to provide a complete Traffic Control Plan.

Under no circumstances shall any night time work be performed prior to the Engineer's approval of the Traffic Control Plan and the installation of the required advisory signs. During night time work, the Engineer shall have the right to modify the Traffic Control Plan to adjust for field conditions and shall be the sole judge of the spacing, length, and sequence of the lane closure areas.

Full compensation for furnishing all labor, materials, tools, equipment and incidentals and for doing all work involved in public safety and convenience shall be considered as included in the prices paid for traffic control system and no additional compensation will be allowed.

9.18 USE OF SLIP-FORM MACHINES FOR CONCRETE CONSTRUCTION

The Contractor may use concrete slip form machines to construct concrete curbs, gutters and sidewalks. The Contractor must maintain proposed lines and grades as shown on the plans. For curbs constructed on existing pavements, the contractor must construct the curb to eliminate any uneven lines and top of curb grade elevations. If in the sole discretion of the Engineer, these lines and grades are not maintained, the Contractor shall remove and replace the concrete at his/her costs.

9.19 TRAFFIC CONTROL AND HANDLING FOR CONSTRUCTION STAKING

The Contractor is responsible for providing traffic control and handling for the City survey crew for all Contractor staking requests that require stakes within the vehicle travel lanes. The cost to

provide traffic control and handling for construction staking in the vehicle travel lanes shall be included in the bid items the Contractor deems appropriate.

9.20 PUBLIC NOTIFICATION

The Contractor shall notify residents and businesses within the project limits in writing five (5) working days in advance of beginning work. The notice shall be approved by the Engineer and shall describe the work to be performed, the anticipated duration of construction and the name and telephone number of the Contractor's representative that can be reached 24 hours a day, 7 days a week.

The Contractor shall be responsible for issuing a second notice to property owners five (5) working days in advance of commencing any work on private property. The Contractor shall include in the public notification flyers/postcards detailed procedures explaining precautions the homeowner can take to help prevent plugged utility service fixture problems. The Contractor shall submit to the Engineer for review and approval public notification flyers/postcards before they are issued to the public.

Full compensation for this item shall be included in the prices paid for various contract items of work and no additional compensation will be allowed.

9.21 EQUIPMENT LIST AND DRAWINGS SUBMITTALS

Equipment list and drawings shall be in accordance with Section 34-3 of the Standard Specifications and these Special Provisions.

Unless otherwise permitted in writing by the Engineer, the Contractor shall, within twenty (20) days following notification of award of the contract submit to the Engineer for approval a listing of equipment and material which he/she proposes to furnish and install. The list shall be complete as to name of manufacturer, size and catalog number of unit, and shall be supplemented by other data, including detailed scale drawings and wiring drawings. A minimum of five (5) copies of the above data shall be submitted to the Engineer for review and approval.

The Contractor shall submit to the Engineer a statement from each vendor supplying electrical equipment, including but not limited to, signal heads, standards, electroliers, luminaries, service pedestal and all other electrical equipment indicating that the orders for the materials required for this contract have been received and accepted by said vendor. The confirmed date of delivery to the contractor shall be indicated on the statement.

All substitutions are subject to the approval of the Engineer.

9.22 PROOF OF COMPLIANCE WITH CONTRACT

In order that the Engineer may determine whether the Contractor has complied with the requirements of the contract documents not readily determinable through inspection and tests of plant, equipment, work, or materials, the Contractor shall at any time when requested, at the Contractor's expense, submit to the Engineer properly authenticated documents or other satisfactory proofs as to his compliance with such requirements.

9.23 BACKFILLING OF VOIDS

All voids resulting from the removal of trees, pipes, maintenance holes, ditch boxes, or other buried structures or objects shown on the Plans or called in these Special Provisions to be removed, shall be backfilled per the provisions of Section 26 (Trench Backfill) of the Standard Specifications. In the event job excavated native material is unsuitable for backfill as determined by the Engineer, the Contractor shall furnish the required suitable backfill material.

The Cost to backfill voids as specified in the Special Provisions shall be included in the price bid for the respective items to remove trees, pipe, maintenance holes, ditch boxes, or other buried structures or objects, and no additional compensation shall be allowed.

9.24 PAVEMENT CUTTING AND RESTORATION

Pavement cutting and restoration shall conform to the provisions of Sections 13-4 of the Standard Specifications and these Special Provisions.

No pavement cutting shall precede pavement excavation by more than seven (7) calendar days unless approved by the Engineer. Prior to excavation in paved areas, pavement will be broken within the limits of expected excavation so as to prevent lifting of the pavement during excavation. Prior to restoration, the pavement shall be sawed or scored with an abrasive type pavement cutter (maximum blade width 1/4"). The proper tools and equipment shall be used so that the pavement will be cut to a neat and straight line six inches (6") beyond the limits of actual excavation.

Where pavement cutting takes place more than five (5) calendar days before trench excavation, the Contractor shall fill the pavement cuts with asphaltic patching mix and maintain a smooth riding surface until trenching begins.

Where the limits of excavation are located within twelve (12") of the edge of existing pavement or lip of the curb and/or gutter, the existing pavement within this twelve inches (12") shall also be removed.

Full compensation for furnishing all labor, materials, tools, equipment and incidentals and for all work involved in this item shall be considered as included in the unit price bid for roadway excavation and removing and replacing asphaltic concrete pavement.

9.25 PROTECTION OF TREES

During construction the Contractor shall protect existing trees. All work near the trees shall be coordinated by the Contractor with the City Arborist, Duane Goosen, phone number 808-4996. The Contractor shall comply with direction as given by the City Arborist and the following City requirements regarding tree protection:

No storage of materials or parking of vehicles may occur within the drip lines of the trees, except on paved streets.

If, during construction, tree roots two inches (2") in diameter or greater are encountered, work shall stop immediately and the City Arborist shall be contacted for a root inspection, and roots

shall not be cut without arborist approval. Roots approved by the arborist to be pruned during the course of project construction shall be cleanly cut. If extensive root pruning is proposed an arborist inspection will determine if tree removal is necessary.

If construction activities will affect any of the limbs of the trees, a certified arborist (certified by International Society of Arboriculture, Western Chapter) shall be consulted prior to the cutting or removal of any limb. Limbs approved by the arborist to be pruned during the course of project construction shall be cleanly cut.

The Contractor shall be responsible for damages to trees. Trees damaged by the Contractor during construction activities shall be assessed by the City Arborist using the International Society of Arborists (ISA) appraisal guide or UFS standard diameter and area indexing. The Contractor's responsibility for damaged trees will be determined by the Arborist.

Full compensation for furnishing all labor, materials, tools, equipment and incidentals and for doing all work involved in this section shall be considered as included in the prices paid for various contract items of work and no additional compensation will be allowed.

9.26 TREE TRIMMING

Trees identified by the Engineer to be trimmed shall be trimmed in accordance with the following specifications and as directed by the Engineer or project Arborist in conjunction with the City Arborist:

General Conditions - This work is to be performed by a Tree Service Contractor, licensed and bonded to do business in the City of Sacramento. The work to be done will consist not only of this trimming and removal of branches and limbs but also disposal of material trimmed from these trees. Disposal of material will not be allowed at the City Dump.

Contractor shall be aware of and shall comply with all ordinances governing and related to tree trimming work. Contractor shall furnish all labor, materials and equipment as required in performing the work described herein in strict accordance with these specifications and subject to the terms and conditions of this contract.

Description of Work - The work shall be done primarily from truck mounted aerial platforms except where trees are inaccessible to trucks. All hand and power tools in the performance of this work shall be subject to inspection and approval of the Manager of the Urban Forest Services division or his designated representative who shall serve as the inspector for the City.

In general, the standard tree trimming equipment shall be used and shall be maintained in a satisfactory condition at all times. All tools shall be clean, sharp, in proper working order and shall be checked for safety before each job.

Inspection/Permit - The Contractor shall notify the Engineer prior to 8:00 a.m. on each day Contractor will be trimming trees.

The Contractor shall notify, 3 working days prior to tree trimming, the City Arborist, Duane Goosen, (916) 808-4996 and obtain, for this project, a permit for tree trimming within the City.

Special Conditions - All licenses, insurance, etc., necessary to assume the legal responsibility for said work shall be acquired by the Contractor to cover the liabilities which might be caused by said work.

All workmen shall comply with State Compensation Safety Rules and must wear safety equipment at all times while on the job. Adequate warning devices, barricades, guards, cones, etc., shall be placed and necessary precautions shall be taken by the Contractor to provide protection for the workers, pedestrians and vehicular traffic in the area. Work shall be scheduled and conducted in a cooperative manner in order to give the least possible interference with or annoyance to others. It shall be the responsibility of the Contractor to work out any cooperative work schedules as necessary.

All tree work requiring climbing of trees shall be suspended during inclement weather. No trimmings or debris shall be left overnight on any of the work sites. Upon completion of a specific area, the site shall be left in a clean and orderly condition. It shall be the responsibility of the Contractor to repair any damages to adjacent property including shrubs, trees or other growth as well as structures along the route.

To prevent the spread of Dutch elm disease, tree trimming tools shall be sprayed with Lysol before any tree trimming and after each tree has been trimmed.

Personnel - All work shall be done by qualified and trained persons. They shall be familiar with tree climbing and trimming work in general and trained to work in trees of any size. A qualified foreman shall be provided to oversee and direct the work of each crew.

Correct Cuts - All work shall be done in a professional and workmanlike manner. All cuts shall be made in accordance with the following sections in these Special Provisions, and as directed by the Engineer. Trees shall be trimmed at locations where there are tree conflicts and as directed by the Engineer or project Arborist in conjunction with the City Arborist.

Tree trimming shall include the removal of any limbs or brush from limbs in order to achieve a clear space of at least six foot (6') radial distance from each luminaire. The results of the tree trimming shall produce an unobstructed cone of light that will illuminate a semicircle on the street at street level. The semicircle shall have a radius of forty feet (40') minimum on the street from the electrolier base. The unobstructed cone of light shall also illuminate an area at sidewalk level on the house side of the electrolier. This illuminated area shall extend fifteen feet (15') minimum from the base of the electrolier.

Twigs, small limbs and sucker growth shall be removed with hand pruners, pole pruners or a fine toothed saw. All portions of a tree removed in the pruning operations, whether small or large in diameter, shall be made just outside the branch bark ridge, parallel to and immediately adjacent to the tree limb from which the part is removed.

Any dead wood and broken limbs encountered in the pruning operations shall be removed. Dead wood shall be defined as any portion of the tree having no living foliage, no live buds or no apparent life in the cambium layer. Final cuts on dead limbs shall not cut into the branch bark

ridge or branch collar of the parent limb. Dead limbs larger than three-fourths of one inch (3/4") in diameter shall be removed by sawing. Broken limbs shall be removed except where branches have split and one portion of the branch can be saved by pruning to reduce lateral end weight.

Shrubs shall be pruned as directed by the Engineer and shall conform to current ISA specifications.

The cost of such work shall be included in whatever bid item the Contractor deems appropriate.

9.27 STOP WORK IF CULTURAL RESOURCES ARE DISCOVERED

If artifacts or stone, bone, or shell are uncovered during construction activities, the Contractor shall stop work within 100 feet of the find and notify the City, who will consult with a qualified archaeologist for an on-the-spot evaluation. Additional mitigation of the archaeological site will be the responsibility of the City. If bone is found and it appears to be human, the City will notify the Sacramento County coroner and the Native American Heritage Commission (916/322-7791).

9.28 HEALTH AND SAFETY

The Contractor is warned that existing sewers and appurtenances have been exposed to sewage and industrial wastes. These facilities shall therefore be considered contaminated with disease-causing organisms. Personnel in contact with contaminated facilities, debris, wastewater, or similar items shall be advised by the Contractor of the necessary precautions that must be taken to avoid becoming diseased. It is the Contractor's responsibility to urge his personnel to observe a strict regime of proper hygienic precautions, including any inoculations recommended by the local public health officer.

Because of the danger of solvents, gasoline, and other hazardous material in the existing sewers, these areas shall be considered hazardous to open flame, sparks, or unventilated occupancy. The Contractor shall be aware of these dangers and shall take the necessary measures to assure his personnel observe proper safety precautions when working in these areas.

The Contractor shall not allow any wastewater to discharge from sewage collection systems onto adjacent lands of waters. In case of accidental discharge, the Contractor shall be responsible for containment, immediate cleanup and disposal at his own expense to the full satisfaction of the Engineer. Where containment is not possible, adequate disinfection shall be provided by the Contractor at his expense as directed by the Engineer or agency with jurisdiction. If, in the opinion of the Engineer, the Contractor fails to adequately follow the above guidelines, he will make arrangements to have the work done by others, and have the cost charged to the Contractor.

9.29 PERMITS AND STAGING AREA

If the Contractor decides he/she needs additional working easement areas, work sites or material sites to facilitate his operation, it shall be his sole responsibility to locate, negotiate, obtain and pay for such additional working easements, work sites and material sites.

The Contractor shall submit to the Engineer written authorization from the property owner of private property being used for the storage of equipment or materials. A copy of any written

agreements entered into between the Contractor and the property owner concerning encroachment onto private property shall be provided to the Engineer prior to beginning any work on the property.

All areas lying outside of the street right-of-way which are affected by the work shall be restored to the same or better condition existing prior to the commencement of the work, to the satisfaction of the Engineer.

The cost of necessary permits, all restoration, including but not limited to landscaping improvements, shall be included in the various items of work the Contractor deems appropriate, and no separate or additional compensation shall be made.

9.30 RECORD DRAWINGS

The Contractor shall maintain a neatly and accurately marked set of record drawings showing the final elevations, location and/or layout of all improvements constructed, modified and/or adjusted. This shall include, but not be limited to, all civil, mechanical, electrical, instrumentation piping, conduit, structures, and pumping facilities. Drawings shall be kept current weekly, showing all work instructions, field modifications and change orders. Drawings shall be subject to the inspection of the Engineer at all times. Progress payments, or portions thereof, may be withheld if drawings are not accurate and current. Prior to acceptance of the work, the Contractor shall deliver to the Engineer two (2) sets of neatly marked record drawings accurately showing the information required above.

Record Drawing shall show in detail all construction changes, especially location and depth of conduit and completed schematic circuit diagram. All construction changes, if any, shall be entered onto the Record Drawing by the Contractor at the end of each workday and the plan shall be available for inspection by the Engineer at any time.

9.31 MANUFACTURER'S DIRECTION

Manufactured articles, material, and equipment shall be applied, installed, connected, erected, adjusted, tested, used, cleaned, and conditioned as recommended by the manufacturer. Copies of the manufacturer's installation instructions and procedures shall be submitted to the Engineer ten (10) working days prior to the installation of manufacturer's articles, material, and equipment.

9.32 STORAGE OF MATERIALS AND EQUIPMENT

Materials and equipment shall be stored so as to insure the preservation of their quality and fitness for the work. Equipment and materials shall be located so as to facilitate inspection. The Contractor shall be responsible for all damages that occur in connection with the care and protection of all materials and equipment until the completion and final acceptance of the work by the City. The Contractor must obtain written permission for storing material and equipment on private property. A copy of the written permission shall be given to the Engineer.

The Contractor shall submit a plan to the Engineer for approval prior to commencing work, which shows where materials and equipment will be stored within the public right-of-way during work and non-work hours. The plan shall maintain access to driveways and minimize impacts to residents and the general public and shall be approved by the Engineer prior to commencing work.

The "Protection of Trees" provision of these specifications shall apply to storage of materials and equipment on private property.

9.33 CLEANING UP

The Contractor shall not allow the site of the work to become littered with trash, debris, garbage or waste material, but shall maintain the site in a neat, orderly and healthful condition until completion and acceptance of the work.

Before final inspection of the work, the Contractor shall clean the work site and all ground occupied by him in connection with the work of all rubbish, excess materials, falsework, temporary structures, construction markings (by the Contractor or for his benefit) and equipment. All parts of the work shall benefit in a neat and presentable condition. Full compensation for cleaning up is included in the prices paid for the various contract items of work, and no separate or additional payment shall be made for cleaning up.

9.34 TIME BETWEEN CONCRETE SIDEWALK REMOVAL AND REPLACEMENT

The following section applies if concrete sidewalk is removed and replaced.

Construction on the curb ramps must be prosecuted in a manner that allows for the continued use by pedestrians of the intersection being worked on. The Contractor will only be allowed to work at up to two (2) corners at one time, on the same side of the street. If the Contractor removes concrete at a third or fourth corner prior to making the other two accessible, the Contractor shall pay a penalty of $500 per day for each day the curb ramp is not accessible per each curb ramp location. Sidewalk signs indicating that either the sidewalk, the curb ramp, or both the sidewalk and curb ramp are closed to through pedestrian traffic are required. These signs are to be placed at the ¾ points up the three adjacent blocks and on the two opposite corners of the primary street. In order for the sidewalk to be considered open there must be at least a four-foot (4') path of travel around the sidewalk corner.

The curb ramps must be completed in their entirety, including asphalt paving along the gutter area, within eight (8) calendar days of removal. The curb ramps must be available to pedestrian traffic within four (4) calendar days of removal. This can be accomplished with the use of placing well-compacted aggregate base (95% relative compaction) or cutback material in the cutout asphalt section areas adjacent to the gutter. Only cutback material may be placed in the cutout asphalt section areas in the path of travel (i.e. in front of the ramp). The day concrete is removed, regardless of time of day, shall count as the first day.

If the Contractor fails to open the curb ramp to pedestrian traffic in the prescribed four (4) calendar days the Contractor shall pay a penalty of $500 per day for each day's delay per each curb ramp location. If the Contractor fails to open the completed curb ramp, which includes the asphalt paving,

to pedestrian traffic in the prescribed eight (8) calendar days the Contractor shall pay a penalty of $500 per day for each day's delay per each curb ramp location. The City shall have the right to deduct such penalties from any amount due, or that may become due to Contractor, or the amount of such penalties shall be due and collectable from the Contractor or the Contractor's Surety.

In the event that there are utility boxes, or utility poles or appurtenances, located within the curb ramp area that must be relocated, as opposed to adjusted, the Contractor will be granted two (2) additional days to make the curb ramp available and complete the curb ramp before penalties are assessed. This does not necessarily merit additional days to the contract as it may or may not impact the time of completion of the contract.

9.35 REMOVAL OF ON-STREET PARKING

In locations where the Contractor's operations require removal of on-street parking:

In Metered Parking Areas: Seventy-two (72) hours prior to construction, the Contractor shall place signs adjacent to every third parking stall stating "NO PARKING" - (Specific Times and Dates, reason "due to conduit installation for City of Sacramento's Traffic Signal Project", and name and telephone of Contractor's representative that can be reached 24 hours a day, 7 days a week) - Tow Away" **or** "NO PARKING" - (Specific Times and Dates, reason "due to conduit installation for City of Sacramento's Streetlight Project", and name and telephone of Contractor's representative that can be reached 24 hours a day, 7 days a week) - Tow Away this Block". Parking Division can be reached at 808-5354. Contractor shall contact Parking Division prior to placing barricades. Contractor shall request the Parking Division to bag each parking meter with a "NO PARKING" sign and the signs previously placed adjacent to every third stall shall be mounted on a barricade and moved into the stall at the contract

If the Contractor needs less than the entire block then every stall removed shall be barricaded in conjunction with the covering of the parking meters.

Where parking removal is necessary at metered spaces, the Contractor shall coordinate with the City Parking Division three (3) days in advance and shall be responsible for the payment of parking removal fees for removal of metered parking areas from use by the general public (City Code Section 25.122-1). It is recommended that the Contractor consult with the City Parking Division (phone 808-5354) prior to submission of the bid to obtain an estimate of the fees for this project. Note: Fees. $29.00 to bag first meter. $5.00 each additional. Daily Meter Fee $2.25/ each. Based on 6 Day week. Contact City Parking division for latest Fees. Fees may change without notice.

In Non-metered Parking Areas: Seventy-two (72) hours prior to construction, the Contractor shall place signed Type II barricades stating "NO PARKING - (Specific Times and Dates, reason "due to conduit installation for City of Sacramento's Traffic Signal Project", and name and telephone of Contractor's representative that can be reached 24 hours a day, 7 days a week) - Tow Away" **or** "NO PARKING - (Specific Times and Dates, reason "due to conduit installation for City of Sacramento's Traffic Signal Project", and name and telephone of Contractor's representative that can be reached 24 hours a day, 7 days a week) - This Block" at 50- to 60-foot intervals in the work areas. Contractor will notify the Parking Division prior to placing barricades at 808-5354. No fee required in non-metered zones.

"NO PARKING" signs shall be approved by the Engineer prior to their use. "NO PARKING" signs and barricades shall be supplied by the Contractor. The Contractor shall notify the Engineer immediately after the "NO PARKING" signs are in place.

Failure to comply with this section will prevent the City from towing vehicles parked in the proposed work area and will require that work occur on a different day with no additional reimbursement to the Contractor.

Full compensation for furnishing all labor, materials, tools, equipment and incidentals and for payment of all fees and for doing all work involved in removal of on-street parking or interference with access to off-street parking as specified in these Special Provisions and as directed by the Engineer, shall be considered as included in the Traffic Control Plan, Public Safety and Convenience and no additional compensation will be allowed therefor.

9.36 REGIONAL TRANSIT COORDINATION

At least three (3) working days prior to working on streets used as bus routes, the Contractor shall notify the Regional Transit (RT) Dispatcher at 321-2897 and notify RT that traffic restrictions will be in effect and that bus stops may be temporarily out of service.

The Contractors activities shall be performed in such a manner as not to interfere with Light Rail Transit (LRT) service. The Contractor shall obtain an RT Metro Track Warrant (2700 Academy Way, Sacramento) for all work performed near LRT facilities. Failure of the Contractor to comply with this requirement, or violation of the terms of the Track Warrant, will result in the Contractor being required to immediately cease work until a Track Warrant is secured or violation is corrected. Any delays or costs associated with this requirement will be at the Contractor's Expense.

9.37 MAINTAINING EXISTING DRAINAGE SYSTEMS

The Contractor shall be responsible for maintaining existing drainage systems within the limits of the project until any new drainage improvements to be constructed by the project are completed in-place and functioning. Any work performed by City crews to repair and maintain existing drainage systems shall be at the Contractor's expense.

No additional compensation will be paid to the Contractor for maintenance of the existing drainage facilities. The cost of such work shall be included in whatever bid item the Contractor deems appropriate.

9.38 WORK PERFORMED BY CITY CREWS

The Contractor is advised that the City retains the option of performing with City crews, all or a portion of any work involved in relocating, repairing, or otherwise restoring existing sewer, water, and drainage systems and services to developed properties within the limits of the project that may be in conflict with the proposed project improvements. Any such work performed by City forces will be at the discretion and convenience of the City and shall be at the Contractor's expense

Should the Contractor desire City forces to cut and repair existing water, sewer, or drain services, the Contractor shall contact the Engineer at least three (3) working days in advance to schedule and coordinate the work.

9.39 EMERGENCY SEWER, WATER, AND DRAINAGE SERVICE

The Contractor's attention is directed to Section 5-12 "Provisions for Emergencies" of the City Standard Specifications. Whenever, in the opinion of the Engineer, there arises an emergency situation within the limits of the project that involves maintenance of sewer, water, or drainage service to existing developed properties, or a situation that poses a danger to public safety, or inconvenience and/or unreasonable nuisance to the general public, City's forces may be called upon to perform any work necessary to relieve the emergency.

If such emergency is the result of negligence by the Contractor, the cost of any corrective measures taken or work performed by City crews shall be billed directly to the Contractor or may be deducted from any payments owed to the Contractor. The performance of any such emergency work by the City forces shall not relieve the Contractor of any responsibilities, obligations, or liabilities under the contract for the project.

9.40 EROSION AND SEDIMENT CONTROL PLAN

Attention is directed to the City of Sacramento Administrative and Technical Procedures Manual for Grading and Erosion and Sediment Control dated January 1994. Before starting work on the project, the Contractor shall submit, for acceptance by the Engineer, an erosion and sediment control plan. The plan shall be implemented during construction of the project to control the major sources of urban runoff pollution from the construction site, including erosion, sedimentation, and improper handling/storage of construction materials and equipment. The elements listed below shall be considered in the development of the plan and the plan shall include sufficient detail to assure the objectives will be satisfied:

Vegetation Stabilization - preservation of existing vegetation; seeding and planting; mulching; providing grassy swales and buffers.

Physical Stabilization - jute netting; drain outlet protection; dust control; rocked or paved driveways from project site to street to prevent tracking dirt onto the public right-of-way and gutters.

Sediment Controls - silt fences; check dams; straw bale barriers; sandbag barriers; rock filter beds; sediment traps; sediment basins, drop inlet protection such as straw bales, gravel traps and filters, burlap filters, sandbag protection.

Specific maintenance plan and program that establishes a frequency of checking erosion and sediment controls after they have initially been constructed through the end of the project.

Construction site housekeeping practices - stabilized construction entrances; solid waste management; material storage and delivery; concrete waste disposal; hazardous materials management; paint and paint supplies; vehicle fueling, maintenance and cleaning; spill prevention and control; daily maintenance/clean up.

The Contractor shall not perform any clearing and grubbing, excavation, or earthwork of any type on the project, other than that specifically authorized in writing by the Engineer, until a written acceptance of the erosion and sediment control plan has been received from the Engineer. If in the opinion of the Engineer the plan does not sufficiently addresses the objectives outlined in this section, the Contractor shall revise the plan accordingly to the satisfaction of the Engineer.

Full compensation for conforming to the requirements of this section shall be considered as included in the prices paid for the various items of work and no additional compensation will be allowed therefor.

9.41 PROTECTION OF SURVEY MONUMENTS

The Contractor is responsible for verifying that the arrangements have been made for preserving and/or perpetuating all permanent survey monuments that will be affected by the work. The Contractor is responsible for preserving all permanent survey monuments that are not proposed to be disturbed. The Contractor shall provide notice to the Engineer a minimum of ten (10) working days prior to disturbance or removal of permanent survey monuments. Many survey monuments are located in curb ramp areas. The Engineer shall coordinate with the Contractor to reset monuments or provide permanent witness monuments and file the required documentation with the County Surveyor pursuant Business and Professions Code section 8771.

9.42 WORK AFFECTING THE PUBLIC RIGHTS OF WAY

The Contractor shall refer to the City of Sacramento, Ordinance No. 2002-004, recently adopted and in effect as of March 19, 2002. Knowledge of, and compliance with, the provisions of this ordinance is required. Copies of this ordinance are available at the reception desk on the 1st floor of 927 10th Street, Sacramento, CA 95814-2702. The provisions of this contract require compliance with all City, State and Federal laws. Reference is made to this particular ordinance only because it may have significant impacts to construction operations, and associated traffic control. The ordinance establishes criteria and restrictions as it relates to maintenance, damage, traffic control, construction noise, and various other issues on, or related to, a construction project or other permitted work within the City limits. It further establishes administrative penalties, in the order of $500, for each violation of the provisions of the ordinance.

9.43 EQUIPMENT TO BE SALVAGED

All material and equipment removed shall be in accordance with Section 34-23 of the Standard Specifications.

9.44 UTILITIES INFORMATION AND REQUIREMENTS

The locations, alignments, and depths of existing underground utilities as shown on the Plans are taken from public records and no responsibility is assumed for the accuracy thereof. For the most part, underground utility services are not shown on the Plans.

The Contractor's attention is directed to the provisions of Chapter 3.1 "PROTECTION OF PUBLIC UTILITIES IN PUBLIC CONTRACTS" of the California Government Code concerning protecting existing overhead and underground utilities. In particular, Section 4216 "Subsurface Installations;

Membership of Owners in Regional Notification Center; Notice of Excavation; Inquiry Identification Number; Marking Locations; Application of Section; Violations; Penalties" and Section 4217 "Permit to Excavate; Necessity of Inquiry Identification Number; Operative Date of Section"

The Contractor is responsible for the protection of and for damage to existing overhead and underground utility lines and services encountered during the course of construction. The Contractor shall notify the respective utility owner prior to any interruption of service.

The Contractor is advised to "pothole" existing underground utilities a minimum of ten (10) working days in advance at any location where an existing utility line may be in conflict with the proposed work.

The cost of relocating existing overhead or underground utilities not specified on the Plans to be relocated, but which the Contractor elects to relocate or cut and reconnect for his/her own convenience, shall be borne by the Contractor.

No compensation will be paid to the Contractor for maintenance and protection of existing utilities and facilities. The cost of such work shall be included in whatever bid item the Contractor deems appropriate.

9.45 MAINTAINING EXISTING ELECTRICAL FACILITIES

Maintaining Existing Electrical Facilities shall be in accordance with Section 34-7 of the Standard Specifications and these Special Provisions.

9.46 MAINTAINING EXISTING SANITARY SEWER SYSTEMS AND SERVICES

The Contractor shall be responsible for maintaining the flows in any existing sanitary sewer systems within the limits of the project until any new sewer improvements to be constructed by the project are completed in-place and functioning.

The Contractor, at his/her option, may elect to cut existing sewer services or tunnel beneath them. All sewer services cut by trench excavation or other construction activities shall be replaced before nightfall of the same day. The cut sewer services shall be repaired as detailed on Standard Drawing C.E. 68 included in Section 38 of the City Standard Specifications. Any work performed by City crews to cut and repair existing sewer services shall be at the Contractor's expense.

No additional compensation will be paid to the Contractor for maintenance and protection of existing sanitary sewer systems or sewer services. In addition, no compensation will be paid to the Contractor for the repair by City crews of any sewer services accidentally or purposely cut by the Contractor. The cost of such work shall be included in whatever bid item the Contractor deems appropriate.

9.47 MAINTAINING EXISTING WATER SYSTEMS AND SERVICES

The Contractor shall be responsible for maintaining existing water systems and service to all developed properties within the limits of the project until any new water improvements to be constructed by the project are completed in-place and functioning.

The Contractor, at his/her option, may cut existing water services or tunnel beneath them. All water services to be cut by trench excavation or other construction activities shall become the responsibility of the Contractor to repair. Maximum time of interruption of water service to any residence or business shall be four (4) hours.

Should the Contractor choose to cut existing water services rather than tunnel beneath them, the Contractor shall notify the Engineer at least three (3) working days in advance to allow City crews to give residences and business twenty-four (24) hour notice of the interruption in water service.

No additional compensation will be paid to the Contractor for maintenance of existing water systems. The cost of such work shall be included in whatever bid item the Contractor deems appropriate.

In addition, no compensation will be paid to the Contractor for the repair by City crews of any water services accidentally or purposely cut by the Contractor. Also all work performed by City crews to cut and repair existing water services at the request of the Contractor shall be at the Contractor's expense. The cost of such work shall be included in whatever bid item the Contractor deems appropriate.

9.48 TEMPORARY DIVERSION/BYPASS OF EXISTING SEWER, WATER OR DRAINAGE FLOWS

Should it become necessary for the Contractor to temporarily divert, bypass, or impound flows carried by existing sewer, water, and drainage systems through or around the construction operations within the limits of a project, the Contractor shall prepare a plan of such diversion, bypass, or impoundment and submit the plan to the Engineer for approval.

The plan shall be sufficiently detailed so as to illustrate the concept proposed. The plan shall also provide information on the quantity of flow to be conveyed by the diversion or bypass system or the volume to be impounded. The plan shall also indicate the number, size, and material type(s) of any pipes, the size and configuration of any channel, and the size and configuration of any impoundment basin to be used.

The plan for temporary diversion or bypassing of existing sewer, water, or drainage flows shall be submitted to the Engineer a minimum of (10) working days prior to the start of work on any temporary system. The Contractor shall not begin work on any temporary diversion, bypass, or impoundment system until an approved plan is on file with the Engineer.

No additional compensation will be paid to the Contractor for temporary diversion, bypassing, or impoundment of existing drainage, sewer, or water flows. The cost of such work shall be included in whatever bid item the Contractor deems appropriate.

9.49 SCHEUDLING OF WORK

Scheduling of work shall be in accordance with Section 34-4 of the Standard Specifications and these Special Provisions. All new standards, conduit, and conductors shall be in operation prior to removing standards to be salvaged, unless otherwise noted.

9.50 SPRINKLERS

The Contractor shall be responsible for protecting any existing sprinkler systems that are encountered within the project site. Sprinklers damaged as a result of the Contractor's operations shall be repaired at the Contractor's expense and no additional compensation will be allowed therefor.

9.51 LANDSCAPING

The Contractor shall replace the grass and any landscaping to match existing conditions, subject to the approval of the Engineer, disturbed or damaged as a result of Contractor's operations not included as part of the project. Existing grass that is to be removed shall be replaced with sod that is of the same type as the grass being removed. This work shall be included in the prices paid for the various bid items of work and no additional compensation will be allowed therefor.

9.52 REMOVAL OF UNDERGROUND SERVICE ALERT (USA MARKINGS)

All USA markings (painted or other) shall be removed upon completion of excavation activities. The limits of removal shall be along the length of the project and width from back of sidewalk to back of sidewalk. Removal shall be done by sand blasting, high-pressure wash or a method approved by the Engineer. Removal shall include all markings on streetlights and poles.

Removal shall be accomplished in a manner that leaves the site in a condition equal to or better than before the USA markings were placed.

The Contractor shall be responsible for restoring striping or painting inadvertently removed by the removal of USA markings.

Exceptions to removing USA markings include projects which will overlay, slurry seal or reconstruct the pavement and sidewalk and by their very nature will cover or remove the USA markings during the course of construction.

The cost of removal USA markings shall be included in the bid items the Contractor deems appropriate.

If the Contractor fails to remove USA markings (painted or other), the Contractor shall pay an administrative penalty of $500 per day for each day's delay. The City shall have the right to deduct such administrative penalties from any amount due, or that may become due to Contractor, or the amount of such penalties shall be due and collectable from the Contractor or the Contractor's Surety.

9.53 COST BREAK-DOWN FOR LUMP SUM ITEMS

The contractor shall submit a cost break down for each lump-sum item detailing material and labor costs including profit and overhead to substantiate the total lump-sum costs. No progress payments will be made for lump sum items where the contractor has not submitted a cost break-down. The sum of the amounts for the units of work listed in the cost break-down shall be equal to the contact lump sum price bid for the work.

The Contractor shall determine the quantities to complete the work shown on the plans. **The quantities and values shall be included in the cost break-down submitted prior to construction**. The Contractor shall be responsible for the accuracy of the quantities and values. No adjustment in compensation will be made in the contract lump sum prices paid for the various work items due to any differences between the quantities shown in the cost break-down furnished by the Contractor and the quantities required to complete the work as shown on the plans and as specified in these special provisions. At the Engineer's discretion, the approved cost break-down may be used to determine partial payments during the progress of the work and as the basis of calculating the adjustment in compensation for the items of work due to changes ordered by the Engineer.

When an ordered change increases or decreases the quantities of an approved cost break-down, the adjustment in compensation may be determined, at the Engineer's discretion, in the same manner specified for increases and decreases in the quantity of a contract item of work in accordance with Section 4-1.03B, "Increased or Decreased Quantities", of Caltrans Standard Specification. The cost break-down submitted by the responsive qualified low bid Contractor shall be approved by the Engineer before any partial payment for the items of work shall be made based on the cost break-down. The cost break-down shall include, but is not limited to: type of equipment, estimated quantity, and unit price ($/LF or each). Contractor shall submit break-down in a spreadsheet format. See example format below. Contractor may include overhead and profit in the items or add them in separately.

Temporary Fencing – list type, quantity (LF), unit price ($/LF).
Platform Canopies – list type, quantity (LF), and unit price ($/LF).
Asphalt Concrete – section thickness, quantity (LF), and unit price ($/LF).
Excavation/Grading – quantity (CY), and unit price ($/CY).
Metal Guard Rail and Handrails - list type, quantity (LF), and unit price ($/LF).

9.54 SIGNING AND STRIPING SPECIFICATIONS

Thermoplastic Traffic Stripes and Pavement Markings

Raised Pavement Markers shall be in accordance with Section 15 and Section 85 of the California State Standard Specification.

Thermoplastic traffic stripes and markings, both white and yellow, shall be placed as shown on the Plans in accordance with these Special Provisions, as directed by the Engineer, and in conformance with Sections 84-1 and 84-2 of the State Standard Specifications. All pavement markings shall be in conformance with the State Standard Plans.

Striping removal shall be accomplished by grinding. Contractor shall remove existing striping and markings as shown on the plans or as required to place new striping and to complete the final striping plan complete in place.

A. Material

Thermoplastic shall be Alkyd type for extrusion application and shall produce an adherent reflectorized strip capable of resisting deformation by traffic. The thermoplastic material shall be 100 percent solids. The binder shall consist of synthetic alkyd resins and shall be homogeneously incorporated with all the necessary prime pigments, fillers, and glass beads to produce a traffic coating to meet the requirements as specified herein.

Characteristics of Finished Thermoplastic:

	White	Yellow
Glass Beads, AASHTO M-247, Type I, percent by weight, min. (Cal. Test Method 423)	30	30
Titanium Dioxide (TiO2), percent by weight, min. (AASHTO T250-77)	10	
Lead Chromate, Medium Heat Stability, percent by weight, min.		2.5
Specific Gravity, max. (Cal. Test Method 423)	2.15	2.15
Binder, percent by weight, min. (Cal. Test Method 423)	18	18
Ring & Ball Softening Point, °F (ASTM E28)	200 – 240	200 – 240
Tests on Material after 4 hours heat with stirring at 425° + 2°F, which includes 1 hour for meltdown and temperature stabilization:		
Bond Strength to Concrete, 0.125-inch thick film drawdown at 425°F test at 75°F + 2°F, psi, min (Cal. Test Method 423)	180	180
Brookfield Thermosel Viscosity, Spindle SC4-27, 20 RPM at 425°F, Poise (Cal. Test Method 423)	30 – 45	30 – 45

Impact Resistance, Falling Ball Method, 0.125-inch thick film drawdown at 425°F on concrete. Test at 75°F + 2°F inch-lbs., (ASTM D2794)	10	10
Daylight Luminous Reflectance, min. (ASTM E97)	75	40
Yellowness Index, max., (ASTM E313)	.15	
Hardness, Shore A-2 Durometer with 2 kilogram weight at 115°F (Cal. Test 423)	60 – 80	60 – 80
Low Temperature Stress Cracking, Resistance at 25°F (AASHTO)	No Crack	No Crack
Color Match, Federal Std. No. 595a, Color No. 33538		Passes

B. Application

The thermoplastic material shall be applied by extrusion methods in a single uniform layer.

Stencils shall be used when applying thermoplastic material for pavement markings. Stencils may be new or used, if in good condition. If stencils are bent or damaged, they shall be replaced at the request of the Engineer.

The pavement surface to which thermoplastic material is applied shall be completely coated by the material and the voids of the pavement surface shall be filled.

Unless otherwise specified in the Specifications, the thermoplastic material for traffic stripes shall be applied at a minimum thickness of 0.075-inch. Thermoplastic Material for pavement markings shall be applied at a minimum thickness of 0.125-inch. Glass beads shall be applied immediately to the surface of the molten thermoplastic material, at a rate of not less than 8 lbs. per 100 sq. ft. The amount of glass beads applied shall be measured by stabbing the glass beads tank with a calibrated rod.

C. Tolerances and Appearance

The completed traffic stripes and markings shall have clean and well-defined edges without deformations, and shall be free of tears or other disfigurements. Improperly placed, defective or disfigured traffic stripes and markings shall be immediately removed from the pavement surface by methods approved by the Engineer. All such removal work shall be at the Contractor's expense.

Completed traffic stripes shall be uniform, shall be straight on tangent alignment, and shall be on a true arc on curved alignment. On tangent alignment, when a 100' string line is stretched taught and placed directly on the outer edge of the completed traffic stripe, the distance

between the string and the edge of the traffic stripe shall not exceed three-fourths of one inch (3/4") when measured anywhere along any 100' interval of the tangent alignment. On curved alignments, the outer edge of the traffic stripe shall not deviate more than three-fourths of one inch (3/4") from the true arc. The lengths of the gaps and individual stripes that form broken traffic stripes shall not deviate more than 2" from the lengths required to produce a uniformly repeating, broken-stripe pattern.

Signage

All signs shall be manufactured, provided and installed at such locations as shown on the Plans and as directed by the Engineer in conformance with these Special Provisions.

The Contractor shall notify the Engineer two (2) working days prior to the placement of the signs. The Contractor shall review the proposed sign location with the Engineer and a supervisor from the City's Traffic Signs and Markings section prior to installation of the sign. The Engineer may make adjustments to the proposed sign location in the field.

A. Street Signs

Sign posts shall be on two-inch galvanized Schedule #40 steel posts conforming to Section 10-38 (2, 5 and 10) of the City's Standard Specifications. All posts shall have a Minimum Resisting Moment of 400 foot-pounds. All posts shall be capped. Post caps may be aluminum or galvanized steel. Bolts and miscellaneous metal hardware shall be galvanized or plated after fabrication in conformance with Section 75-1.05 "galvanizing" of the State of California, Department of Transportation Standard Specifications.

Signs located at the side of the roadway shall have a minimum height of seven feet (7') from the adjacent ground to the bottom of the sign, unless specified otherwise. The height of a combination of signs, such as an R7 with an R10, shall be 18 inches from the top of the island to the bottom of the lowest sign (R10) with a maximum one-inch separation between the two signs.

Sign panels shall be not less than 0.080 inches thick aluminum panels. Sheeting for W, G-7, R signs (except "No Parking") and all other street name signs shall be type IX (VIP Grade) in accordance with ASTM specification for Retroreflective sheeting for permanent signing. Signs shall meet the standards set forth in the California Department of Transportation Traffic Manual. A 3-inch by 1½-inch "City of Sacramento" logo box with ½-inch white, red or black letters shall be centered and printed on the lower border of each sign blank prior to application of the reflective sheeting. As an alternative, the "City of Sacramento" logo with ½-inch letters may be placed in the border area.

Each sign shall have the date of manufacture and a location number stenciled on the backside. Location information shall consist of each sign having an individual number which will be recorded on a clean set of Plans during the sign installation. This procedure will be in accordance with the "Record Drawings" section of these Special Provisions.

The Contractor shall use the sign sizes as shown in the State of California, Department of Transportation Traffic Manual, unless specified otherwise on the drawings.

The cost to remove existing signs where shown on the Plans shall be included in the unit prices for these items and no additional compensation shall be made therefor.

1. Sign Posts

A 5/16-inch diameter cap screw with a plated rubber backwasher against the face of the sign and elastic stop nuts shall be placed through the sign and post at both top and bottom of each sign. A "V" notched piped saddle, to support the sign, shall be placed between the sign and the post. See detail sheet for details.

2. Signal and Street Light Poles

Place a ¾-inch stainless steel banded strap and appropriate hardware at both top and bottom of each sign.

B. Overhead Street Name Signs

The Contractor shall provide and install the overhead street name(s) signs as shown on the Plans. These street name signs shall be installed on traffic signal standards as shown on the Plans.

Each sign shall be of the appropriate size as shown on the Plans (see table below) and come with an angle brace 1.25" x 1.25" mounted on the back. Each sign shall also come with brackets with springs for mast arm mounting #M1OJ-OCB23OFL (S) and #M1OJ-OCB25AL (S) from Hawkins Traffic Safety Supply (1-800-772-3995).

Sign Size	Type of Street
18" x 30"	numbered and lettered streets
18" x 72"	name streets
30" x 72"	name streets with two (2) lines

The sign panel shall be 0.80 inches thick aluminum. Sheeting shall be type IX (VIP grade) sheeting in accordance with ASTM specification for retroflective sheeting for permanent signing. A copy of this specification is available to the Contractor at the City. The background color shall be green. Sign letters shall be white 8" capital and 6" lower case. Address numbers shall be white 4". The borders shall be ¾" white with ¾" margins.

Each sign shall have the date of manufacture and a location number stenciled on the backside. Location information shall consist of each sign having an individual number which will be recorded on a clean set of Plans during the sign installation. The procedure will be in accordance with the "Record Drawing" section of these Special Provisions.

Before ordering signs, Contractor is responsible for verifying the street address block numbers to be included on the overhead street name signs.

C. Sheeting Grade

Sheeting Grade shall use ASTM Type IX specifications designed to enhance nighttime visibility of traffic control signs and objects. Type IX sheeting shall have a precoated adhesive protected by an easily removable liner.

SECTION NO. 10 - ITEMS OF THE BID PROPOSAL

ITEM NO. 1 - PRECONSTRUCTION PHOTOGRAPHS

Preconstruction photographs shall conform to Section 11 of the Standard Specifications.

Payment shall be at the lump sum bid and shall include full compensation for furnishing all labor, materials, tools, equipment, incidentals and for doing all work involved in taking preconstruction photographs as specified in these Special Provisions and as directed by the Engineer.

ITEM NO. 2 - PREPARE STORM WATER POLLUTION PREVENTION PLAN
ITEM NO. 3 - STORM WATER ANNUAL REPORT

WATER POLLUTION CONTROL

GENERAL

Summary

This work includes developing and implementing a storm water pollution prevention plan (SWPPP).

This project is risk level 1.

Discharges of stormwater from the project must comply with National Pollutant Discharge Elimination System (NPDES) General Permit for Storm Water Discharges Associated with Construction and Land Disturbance Activities (Order No. 2009-0009-DWQ, NPDES No. CAS000002) referred to herein as "Permit."

Information on forms, reports, and other documents can be found in the following Department manuals:

1. Field Guide for Construction Site Dewatering
2. Storm Water Pollution Prevention Plan (SWPPP) and Water Pollution Control Program (WPCP) Preparation Manual
3. Construction Site Best Management Practices (BMP) Manual

For the above-referenced manuals, go to the Department's Web site for the Division of Construction, Storm Water and Water Pollution Control Information, or the Department's Publication Distribution Unit.

Do not start job site activities until:

1. The SWPPP is approved.
2. The waste discharge identification number is issued.
3. SWPPP review requirements have been fulfilled. If the Regional Water Quality Control Board (RWQCB) requires time for review, allow 30 days for the review.

The following RWQCBs will review the approved SWPPP:

1. Central Valley Regional Water Quality Control Board

If you operate a Contractor-support facility, protect stormwater systems and receiving waters from the discharge of potential pollutants by using water pollution control practices.

Contractor-support facilities include:

1. Staging areas
2. Storage yards for equipment and materials
3. Mobile operations
4. Batch plants for PCC and HMA
5. Crushing plants for rock and aggregate
6. Other facilities installed for your convenience, such as haul roads

Discharges from manufacturing facilities, such as batch plants and crushing plants, must comply with the general waste discharge requirements for Order No. 97-03-DWQ, NPDES General Permit No. CAS000001, issued by the State Water Resources Control Board (SWRCB) for "Discharge of Storm Water Associated with Industrial Activities Excluding Construction Activities" and referred to herein as "General Industrial Permit." For the General Industrial Permit, go to the Web site for the SWRCB.

If you operate a batch plant to manufacture PCC, HMA, or other material or a crushing plant to produce rock or aggregate, obtain coverage under the General Industrial Permit. You must be covered under the General Industrial Permit for batch plants and crushing plants located:

1. Outside of the job site
2. Within the job site that serve 1 or more contracts

If you obtain or dispose of material at a noncommercially operated borrow or disposal site, prevent water pollution due to erosion at the site during and after completion of your activities. Upon completion of your work, leave the site in a condition such that water will not collect or stand therein.

The Department does not pay for water pollution control practices at Contractor-support facilities and noncommercially operated borrow or disposal sites.

Definitions

active area: Area where soil-disturbing work activities have occurred at least once within 15 days.

construction phase: Includes (1) highway construction phase for building roads and structures, (2) plant establishment and maintenance phase for placing vegetation for final stabilization, and (3) suspension phase for suspension of work activities or winter shutdown. The construction phase continues from the start of work activities to contract acceptance.

inactive area: Area where soil-disturbing work activities have not occurred within 15 days.

normal working hours: Hours you normally work on the project.

qualifying rain event: Storm that produces at least 0.5 inch of precipitation with a 48-hour or greater period between rain events.

storm event: Storm that produces or is forecasted to produce at least 0.10 inch of precipitation within a 24-hour period.

Submittals

Storm Water Pollution Prevention Plan

General

Within 20 days of contract approval:

1. Submit 3 copies of your SWPPP for review. Allow 20 days for the Department's review. The Engineer provides comments and specifies the date when the review stopped if revisions are required.
2. Resubmit a revised SWPPP within 15 days of receiving the Engineer's comments. The Department's review resumes when a complete SWPPP has been resubmitted.
3. When the Engineer approves the SWPPP, submit an electronic copy and 4 printed copies of the approved SWPPP.
4. If the RWQCB requires review of the approved SWPPP, the Engineer submits the approved SWPPP to the RWQCB for its review and comment.
5. If the Engineer requests changes to the SWPPP based on the RWQCB's comments, amend the SWPPP within 10 days.

A qualified SWPPP developer (QSD) must develop the SWPPP.

The SWPPP must comply with the Department's Storm Water Pollution Prevention Plan (SWPPP) and Water Pollution Control Plan (WPCP) Preparation Manual. Include the following in the SWPPP:

1. Description of the work involved in the installation, maintenance, repair, and removal of temporary and permanent water pollution control practices.
2. Maps showing:

    2.1. Locations of disturbed soil areas

2.2. Water bodies and conveyances
2.3. Locations and types of water pollution control practices that will be used for each Contractor-support facility
2.4. Locations and types of temporary water pollution control practices that will be used in the work for each construction phase
2.5. Locations and types of water pollution control practices that will be installed permanently under the contract
2.6. Pollutant sampling locations
2.7. Locations planned for storage and use of potential nonvisible pollutants
2.8. Receiving water sampling locations

3. Copy of permits obtained by the Department, including Fish & Game permits, US Army Corps of Engineers permits, RWQCB 401 certifications, aerially deposited lead variance from the Department of Toxic Substance Control, aerially deposited lead variance notification, and RWQCB waste discharge requirements for aerially deposited lead reuse.

Include the following items in the SWPPP:

1. For all projects:

   1.1. Schedule
   1.2. Construction site monitoring program (CSMP)

2. For risk level 2 projects add:

   2.1. Adherence to effluent standards for numeric action levels (NALs)
   2.2. Rain event action plan (REAP)

3. For risk level 3 projects add:

   3.1. Adherence to effluent standards for NALs and numeric effluent levels (NELs)
   3.2. REAP

Schedule

The SWPPP schedule must show when:

1. Work activities will be performed that could cause the discharge of pollutants into stormwater
2. Water pollution control practices associated with each construction phase will be implemented
3. Soil stabilization and sediment control practices for disturbed soil areas will be implemented

Construction Site Monitoring Program

A QSD must prepare the CSMP. Change the program to reflect current job site activities as needed. The CSMP must include the following:

1. For all projects:

    1.1. Visual monitoring procedures
    1.2. Sampling and analysis plan (SAP) for nonvisible pollutants
    1.3. SAP for nonstormwater discharges
    1.4. SAP for monitoring required by RWQCB

2. For risk level 2 projects add SAP for pH and turbidity
3. For risk level 3 projects add:

    3.1. SAP for pH and turbidity
    3.2. SAP for temporary active treatment systems

Sampling and Analysis Plan

Include a SAP in the CSMP.

Describe the following water quality sampling procedures in the SAP:

1. Sampling equipment
2. Sample preparation
3. Collection
4. Field measurement methods
5. Analytical methods
6. Quality assurance and quality control
7. Sample preservation and labeling
8. Collection documentation
9. Sample shipping
10. Chain of custody
11. Data management and reporting
12. Precautions from the construction site health and safety plan
13. Laboratory selection and certifications

The SAP must identify the State-certified laboratory, sample containers, preservation requirements, holding times, and analytical method. For a list of State-certified laboratories go to the CDPH Web site.

The SAP must include procedures for sample collection during precipitation.

The SAP must list conditions when you will not be required to physically collect samples such as:

1. Dangerous weather
2. Flooding or electrical storms

3. Times outside of normal working hours

Amend the SAP whenever discharges or sampling locations change because of changed work activities or knowledge of site conditions.

For a risk level 2 or risk level 3 project, include procedures in the SAP for collecting and analyzing at least 3 samples for each day of each qualifying rain event. Describe the collection of effluent samples at all locations where the stormwater is discharged off-site.

The SAP for nonvisible pollutants must describe the sampling and analysis strategy for monitoring nonvisible pollutants.

The SAP for nonvisible pollutants must identify potential nonvisible pollutants present at the job site associated with any of the following:

1. Construction materials and wastes
2. Existing contamination due to historical site usage
3. Application of soil amendments, including soil stabilization materials, with the potential to change pH or contribute toxic pollutants to stormwater

The SAP for nonvisible pollutants must include sampling procedures for the following conditions when observed during a stormwater visual inspection. Include a procedure for collecting at least 1 sample for each storm event for:

1. Materials or wastes containing potential nonvisible pollutants not stored under watertight conditions
2. Materials or wastes containing potential nonvisible pollutants stored under watertight conditions at locations where a breach, leak, malfunction, or spill occurred and was not cleaned up before the precipitation
3. Chemical applications occurring within 24 hours before precipitation or during precipitation that could discharge pollutants to surface waters or drainage systems, including fertilizer, pesticide, herbicide, methyl methacrylate concrete sealant, or nonpigmented curing compound
4. Applied soil amendments, including soil stabilization materials that could change pH levels or contribute toxic pollutants to stormwater runoff and discharge pollutants to surface waters or drainage systems, unless independent test data is available to indicate acceptable concentrations of nonvisible pollutants in the material
5. Stormwater runoff from an area contaminated by historical usage of the site that could discharge pollutants to surface waters or drainage systems

The SAP for nonvisible pollutants must provide sampling procedures and a schedule for:

1. Sample collection during the first 2 hours of rain events that generate runoff
2. Sample collection during normal working hours
3. Each nonvisible pollutant source
4. Uncontaminated control sample

The SAP for nonvisible pollutants must identify locations for sampling downstream and control samples and the reasons for selecting those locations. Select locations for control samples where the sample does not come in contact with materials, wastes, or areas associated with potential nonvisible pollutants or disturbed soil areas.

Amendments

Amend and resubmit the SWPPP:

1. Annually before July 15th
2. Whenever:

    2.1. Changes in work activities could affect the discharge of pollutants
    2.2. Water pollution control practices are added by Contract Change Order
    2.3. Water pollution control practices are added at your discretion
    2.4. Changes in the quantity of disturbed soil are substantial
    2.5. Objectives for reducing or eliminating pollutants in stormwater discharges have not been achieved
    2.6. You receive a written notice of a permit violation for the project from the RWQCB or any other regulatory agency

Allow the same review time for amendments to the SWPPP as for the original SWPPP.

Training Records

Submit water pollution control training records for all employees and subcontractors who will be working at the job site. Include the training subjects, training dates, ongoing training, and tailgate meetings with your submittal. Submit records for:

1. Existing employees within 5 business days of obtaining SWPPP approval
2. New employees within 5 business days of receiving the training
3. A subcontractor's employees at least 5 business days before the subcontractor starts work

Contractor-Support Facility

At least 5 business days before operating any Contractor-support facility, submit:

1. A plan showing the location and quantity of water pollution control practices associated with the Contractor-support facility
2. A copy of the notice of intent approved by the RWQCB and the SWPPP approved by the RWQCB if you will be operating a batch plant or a crushing plant under the General Industrial Permit

Annual Certification

Submit an annual certification of compliance as described in the Department's Storm Water Pollution Prevention Plan (SWPPP) and Water Pollution Control Plan (WPCP) Preparation Manual before July 15th of each year.

Site Inspection Reports

The water pollution control (WPC) manager must submit the following within 24 hours of completing a weekly inspection:

1. Completed Stormwater Site Inspection Report form.
2. Best management practices (BMP) status report. The WPC manager must oversee the preparation of the report. The report must include:

    2.1. Location and quantity of installed water pollution control practices
    2.2. Location and quantity of disturbed soil for active and inactive areas

Visual Monitoring Reports

Submit a visual monitoring report for:

1. Each storm event. Include:

    1.1. Date, time, and rain gauge reading
    1.2. Visual observations:

        1.2.1. Within 2 business days before the storm for:

            1.2.1.1. Spills, leaks, and uncontrolled pollutants in drainage areas
            1.2.1.2. Proper implementation of water pollution control practices
            1.2.1.3. Leaks and adequate freeboard in storage areas

        1.2.2. Every 24 hours during the storm for:

            1.2.2.1. Effective operation of water pollution control practices
            1.2.2.2. Water pollution control practices needing maintenance and repair

        1.2.3. Within 2 business days after a qualifying rain event for:

            1.2.3.1. Stormwater discharge locations
            1.2.3.2. Evaluation of design, implementation, effectiveness, and locations of water pollution control practices including locations where additional water pollution control practices may be needed

2. Nonstormwater discharges during each of the following periods:

    2.1. January through March
    2.2. April through June

2.3. July through September
2.4. October through December

Use the Stormwater Site Inspection Report form to document visual monitoring. A visual monitoring report must include:

1. Name of personnel performing the inspection, inspection date, and date the inspection report is completed
2. Storm and weather conditions
3. Location of any:

    3.1. Floating and suspended material, sheen on the surface, discoloration, turbidity, odor, and source of observed pollutants for flowing and contained stormwater systems
    3.2. Nonstormwater discharges and their sources

4. Corrective action taken

Retain visual monitoring reports at the job site as part of the SWPPP.

Sampling and Analysis

Whenever sampling is required, submit a printed copy and electronic copy of water quality analysis results, and quality assurance and quality control reports within 48 hours of field sampling, and within 30 days of laboratory analysis. Electronic copies must be in one of the following formats: (1) xls, (2) .txt, (3) .cvs, (4) .dbs, or (5) .mdb. Include an evaluation of whether the downstream samples show levels of the tested parameter that are higher than the control sample. The evaluation must include:

1. Sample identification number
2. Contract number
3. Constituent
4. Reported value
5. Analytical method
6. Method detection limit
7. Reported limit

Numeric Action Level Exceedance Reports

Whenever a NAL is exceeded for a risk level 2 or risk level 3 project, notify the Engineer and submit a NAL exceedance report within 48 hours after conclusion of a storm event. The report must include:

1. Field sampling results and inspections, including:

1.1. Analytical methods, reporting units, and detection limits
1.2. Date, location, time of sampling, visual observations, and measurements
1.3. Quantity of precipitation from the storm event

2. Description of BMP and corrective actions taken to manage NAL exceedance

Numeric Effluent Limit Violation Reports

Whenever a NEL is exceeded for a risk level 3 project, notify the Engineer and submit a NEL violation report within 6 hours. The report must include:

1. Field sampling results and inspections, including:

   1.1. Analytical methods, reporting units, and detection limits
   1.2. Date, location, time of sampling, visual observation and measurements
   1.3. Quantity of precipitation from the storm event

2. Description of BMP and corrective actions taken to manage NEL exceedance

Rain Event Action Plan

For a risk level 2 or risk level 3 project, submit a REAP whenever the National Weather Service is predicting a storm event with at least 50 percent probability of precipitation within 72 hours.

The WPC manager must submit the REAP at least 48 hours before a forecasted storm event.

The REAP must include:

1. Site location
2. Project risk level
3. Contact information including 24-hour emergency phone numbers for:

   3.1. WPC manager
   3.2. Erosion and sediment control providers or subcontractors
   3.3. Stormwater sampling providers or subcontractors

4. Storm information
5. Description of:

   5.1. Construction phase, including active and inactive areas
   5.2. Active work areas and activities
   5.3. Subcontractors and trades on the job site
   5.4. Prestorm activities including:

      5.4.1. Responsibilities of the WPC manager
      5.4.2. Responsibilities of the crew and crew size

5.4.3. Stabilization practices for active and inactive disturbed soil areas
5.4.4. Stockpile management practices
5.4.5. Corrective actions taken for deficiencies identified during prestorm visual inspections

5.5. Activities to be performed during storm events, including:

5.5.1. Responsibilities of the WPC manager
5.5.2. Responsibilities of the crew and crew size
5.5.3. BMP for maintenance and repair

6. Flood contingency measures

Storm Water Annual Report

Submit 2 copies of a storm water annual report that covers the preceeding period from July 1st to June 30th. The report must be submitted before July 15th if construction occurs from July 1st to June 30th or within 15 days after contract acceptance if construction ends before June 30th. Allow 10 days for the Engineer's review. The Engineer provides comments and specifies the date when the review stopped if revisions are required.

Obtain approval for the format of the storm water annual report. The report must include:

1. Project information such as description and work locations
2. Stormwater monitoring information, including:

2.1. Summary and evaluation of sampling and analysis results and laboratory reports
2.2. Analytical methods, reporting units, and detections limits for analytical parameters
2.3. Summary of corrective actions taken
2.4. Identification of corrective actions taken and compliance activities not implemented
2.5. Summary of violations
2.6. Names of individuals performing stormwater inspections and sampling
2.7. Logistical information for inspections and sampling, including location, date, time, and precipitation
2.8. Visual observations and sample collection records

3. Documentation of training for individuals responsible for:

3.1. Permit compliance
3.2. BMP installation, inspection, maintenance, and repair
3.3. Preparing, revising, and amending the SWPPP

Submit a revised storm water annual report within 5 business days of receiving the Engineer's comments. The Engineer's review resumes when a complete report has been resubmitted.

When the storm water annual report is approved, submit 1 electronic copy and 2 printed copies of the report signed by the WPC manager.

Information After Storm Event

Within 48 hours after the conclusion of a storm event resulting in a discharge, after a nonstormwater discharge, or after receiving a written notice or an order from the RWQCB or another regulatory agency, the WPC manager must submit the following information:

1. Date, time, location, and nature of the activity and the cause of the notice or order
2. Type and quantity of discharge
3. Water pollution control practices in use before the discharge or before receiving the notice or order
4. Description of water pollution control practices and corrective actions taken to manage the discharge or cause of the notice

Quality Control and Assurance

Training

Employees must receive initial water pollution control training before starting work at the job site.

For your project managers, supervisory personnel, subcontractors, and employees involved in water pollution control work:

1. Provide stormwater training in the following subjects:

    1.1. Water pollution control rules and regulations
    1.2. Implementation and maintenance for:

        1.2.1. Temporary soil stabilization
        1.2.2. Temporary sediment control
        1.2.3. Tracking control
        1.2.4. Wind erosion control
        1.2.5. Material pollution prevention and control
        1.2.6. Waste management
        1.2.7. Nonstormwater management

2. Conduct weekly training meetings covering:

    2.1. Deficiencies and corrective actions for water pollution control practices
    2.2. Water pollution control practices required for work activities during the week
    2.3. Spill prevention and control
    2.4. Material delivery, storage, usage, and disposal
    2.5. Waste management
    2.6. Nonstormwater management procedures

Training for personnel who collect water quality samples must include:

1. CSMP review
2. Health and safety review
3. Sampling simulations

Water Pollution Control Manager

General

The WPC manager must be a QSD. Assign 1 WPC manager to implement the SWPPP. You may assign a QSD other than the WPC manager to develop the SWPPP.

Qualifications

A QSD must:

1. Have completed stormwater management training described in the Department's Web site for the Division of Construction, Storm Water and Water Pollution Control Information
2. Be one or more of the following:

    2.1. California registered civil engineer
    2.2. California registered professional geologist or engineering geologist
    2.3. California licensed landscape architect
    2.4. Professional hydrologist registered through the American Institute of Hydrology
    2.5. Certified Professional in Erosion and Sediment Control (CPESC)™ registered through Enviro Cert International, Inc.
    2.6. Certified Professional in Storm Water Quality (CPSWQ)™ registered through Enviro Cert International, Inc.
    2.7. Professional in erosion and sediment control registered through the National Institute for Certification in Engineering Technologies (NICET)

3. Have completed SWRCB approved QSD training and passed the QSD exam

Responsibilities

The WPC manager must:

1. Be responsible for water pollution control work
2. Be the primary contact for water pollution control work
3. Oversee:

    3.1. Maintenance of water pollution control practices
    3.2. Inspections of water pollution control practices identified in the SWPPP
    3.3. Inspections and reports for visual monitoring
    3.4. Preparation and implementation of REAPs
    3.5. Sampling and analysis

3.6. Preparation and submittal of:

3.6.1. NAL exceedance reports
3.6.2. NEL violation reports
3.6.3. SWPPP annual certification
3.6.4. Annual reports
3.6.5. BMP status reports

4. Oversee and enforce hazardous waste management practices including spill prevention and control measures
5. Have authority to mobilize crews to make immediate repairs to water pollution control practices
6. Ensure that all employees have current water pollution control training
7. Implement the approved SWPPP
8. Amend the SWPPP if required
9. Be at the job site within 2 hours of being contacted
10. Have the authority to stop construction activities damaging water pollution control practices or causing water pollution

Sampling and Analysis

Assign trained personnel to collect water quality samples. Document the personnel and training in the SAP.

Samples taken by assigned field personnel must comply with the equipment manufacturer's instructions for collection, analytical methods, and equipment calibration.

Samples taken for laboratory analysis must comply with water quality sampling procedures and be analyzed by a State-certified laboratory under 40 CFR part 136, Guidelines Establishing Test Procedures for the Analysis of Pollutants.

Whenever downstream samples show increased levels of pollutants, assess water pollution control practices, site conditions, and surrounding influences to determine the probable cause for the increase.

For a risk level 2 or risk level 3 project, obtain samples of pH and turbidity by the test methods shown in the following table:

Parameter	Test method	Detection limit (min)	Unit
pH	Field test with calibrated portable instrument	0.2	pH units
Turbidity	Field test with calibrated portable instrument	1	NTU

Whenever the turbidity NEL is exceeded for a risk level 3 project, obtain samples and analyze the suspended sediment concentration by the test method shown in the following table:

Parameter	Test method	Detection limit (min)	Unit
Suspended sediment concentration	ASTM D 3977	5	Mg/L

For a risk level 3 project, obtain samples of pH and turbidity from representative and accessible locations upstream of the discharge point and downstream of the discharge point.

For multiple discharge points, obtain samples from a single upstream and a single downstream location.

Numeric Action Levels

For a risk level 2 or risk level 3 project, NALs must comply with the values shown in the following table:

Numeric Action Levels

Parameter	Test method	Detection limit (min)	Unit	Value
pH	Field test with calibrated portable instrument	0.2	pH	Lower NAL = 6.5 Upper NAL = 8.5
Turbidity	Field test with calibrated portable instrument	1	NTU	250 NTU max

The storm event daily average must not exceed the NAL for pH.

The storm event daily average must not exceed the NAL for turbidity.

Numeric Effluent Limits

For a risk level 3 project, NELs must comply with the values shown in the following table:

Numeric Effluent Limits

Parameter	Test method	Detection limit (min)	Unit	Value
pH	Field test with calibrated portable instrument	0.2	pH	Lower NEL = 6.0 Upper NEL = 9.0
Turbidity	Field test with calibrated portable instrument	1	NTU	500 NTU max

The storm event daily average for storms up to the 5-year, 24-hour storm must not exceed the NEL for turbidity.

The daily average sampling results must not exceed the NEL for pH.

MATERIALS

Not Used

CONSTRUCTION

General

Manage work activities to reduce the discharge of pollutants to surface waters, groundwater, and municipal separate storm sewer systems.

Retain a printed copy of the approved SWPPP at the job site.

Install facilities and devices used for water pollution control practices before performing work activities. Install soil stabilization materials for water pollution control practices in all inactive areas or before storm events.

Repair or replace water pollution control practices within 24 hours of discovering any damage, unless a longer period is authorized.

The Department does not pay for the cleanup, repair, removal, disposal, or replacement of water pollution control practices due to improper installation or your negligence.

You may request changes to the water pollution control work or the Engineer may order changes to water pollution control work. Changes may include additional or new water pollution control practices. Additional water pollution control work is paid for as extra work under Section 4-1.03D, "Extra Work," of the Standard Specifications.

You may request or the Engineer may order laboratory analysis of stormwater samples. If ordered, laboratory analysis of stormwater samples is paid for as extra work under Section 4-1.03D, "Extra Work," of the Standard Specifications.

Continue SWPPP implementation during any suspension of work activities.

Monitoring

Monitor the National Weather Service's forecast on a daily basis. For the National Weather Service's forecast, go to the Web site for the National Weather Service.

Obtain, install, and maintain a rain gauge at the job site. Observe and record daily precipitation.

Inspections

Use the Stormwater Site Inspection Report form for documenting site inspections.

The WPC manager must oversee:

1. Inspections of water pollution control practices identified in SWPPP:

    1.1. Before a forecasted storm event
    1.2. After a qualifying rain event that produces site runoff
    1.3. At 24-hour intervals during extended storm events
    1.4. On a predetermined schedule of at least once a week

2. Daily inspections of:

    2.1. Storage areas for hazardous materials and waste
    2.2. Hazardous waste disposal and transporting activities
    2.3. Hazardous material delivery and storage activities

3. Inspections of:

    3.1. Vehicle and equipment cleaning facilities:

        3.1.1. Daily if vehicle and equipment cleaning occurs daily
        3.1.2. Weekly if vehicle and equipment cleaning does not occur daily

    3.2. Vehicle and equipment maintenance and fueling areas:

        3.2.1. Daily if vehicle and equipment maintenance and fueling occurs daily
        3.2.2. Weekly if vehicle and equipment maintenance and fueling does not occur daily

    3.3. Vehicles and equipment at the job site for leaks and spills on a daily schedule. Verify that operators are inspecting vehicles and equipment each day of use.
    3.4. Demolition sites within 50 feet of storm drain systems and receiving waters daily.
    3.5. Pile driving areas for leaks and spills:

3.5.1. Daily if pile driving occurs daily
3.5.2. Weekly if pile driving does not occur daily

3.6. Temporary concrete washouts:

3.6.1. Daily if concrete work occurs daily
3.6.2. Weekly if concrete work does not occur daily

3.7. Paved roads at job site access points for street sweeping:

3.7.1. Daily if earthwork and other sediment or debris-generating activities occur daily
3.7.2. Weekly if earthwork and other sediment or debris-generating activities do not occur daily
3.7.3. Within 24 hours of precipitation forecasted by the National Weather Service

3.8. Dewatering work:

3.8.1. Daily if dewatering work occurs daily
3.8.2. Weekly if dewatering work does not occur daily

3.9. Temporary active treatment system:

3.9.1. Daily if temporary active treatment system activities occur daily
3.9.2. Weekly if temporary active treatment system activities do not occur daily

3.10. Work over water:

3.10.1. Daily if work over water occurs daily
3.10.2. Weekly if work over water does not occur daily

Deficiencies

Whenever you or the Engineer identify a deficiency in the implementation of the approved SWPPP, correct the deficiency:

1. Immediately, unless a later date is authorized
2. Before precipitation occurs

The Department may correct the deficiency and deduct the cost of correcting the deficiency from payment if you fail to correct the deficiency by the agreed date or before the onset of precipitation.

Rain Event Action Plan

For a risk level 2 or risk level 3 project, have the REAP at the job site at least 24 hours before a forecasted storm event. The WPC manager must submit the REAP on the following forms:

1. Rain Event Action Plan Highway Construction Phase
2. Rain Event Action Plan Plant Establishment Phase
3. Rain Event Action Plan For Inactive Project

Retain a printed copy of each REAP at the job site as part of the SWPPP.

Implement the REAP, including mobilizing crews to complete activities, within 24 hours before precipitation occurs.

Sampling and Analysis

Perform sample collection during:

1. Normal working hours
2. Each qualifying rain event
3. First 2 hours of each storm event

Do not physically collect samples during dangerous weather conditions, such as flooding or electrical storms.

Document sample collection during precipitation.

Whenever downstream samples show increased levels of pH, turbidity, and other constituents, assess water pollution control practices, site conditions, and surrounding influences to determine the probable cause for the increase.

Collect samples:

1. During a storm event for:

    1.1. Each nonvisible pollutant source and a corresponding uncontaminated control sample
    1.2. All locations identified on the Storm Event Sampling and Analyses Plan form

2. During a qualifying rain event for:

    2.1. Each nonvisible pollutant source and a corresponding uncontaminated control sample
    2.2. pH, turbidity, and other constituents as required
    2.3. At least 3 samples for each day of a qualifying rain event
    2.4. All locations identified on the Qualifying Rain Event Sampling and Analyses Plan form

Collect receiving-water samples for a risk level 3 project and whenever a direct discharge to receiving waters occurs and NELs are violated.

Retain documentation of water quality sampling and analysis results with the SWPPP at the job site.

The Department does not pay for the preparation, collection, laboratory analysis, and reporting of stormwater samples for nonvisible pollutants if water pollution control practices are not implemented before precipitation or if you fail to correct a water pollution control practice before precipitation.

MEASUREMENT AND PAYMENT

The contract lump sum price for prepare storm water pollution prevention plan includes full compensation for furnishing all labor, materials, tools, equipment, and incidentals, and for doing all the work involved in developing and implementing a SWPPP, including providing a WPC manager, conducting water pollution control training, and monitoring, inspecting and correcting water pollution control practices at the job site, as shown on the plans, as specified in the Standard Specifications and these special provisions, and directed by the Engineer.

For projects with 60 working days or less, the Department pays you for prepare stormwater pollution prevention plan as follows:

1. A total of 75 percent of the item total upon approval of the SWPPP
2. A total of 100 percent of the item total upon contract acceptance

For projects with more than 60 working days, the Department pays you for prepare stormwater pollution prevention plan as follows:

1. A total of 50 percent of the item total upon approval of the SWPPP
2. A total of 90 percent of the item total over the life of the contract
3. A total of 100 percent of the item total upon contract acceptance

If risk level 2 or 3, the Department pays $500 for each rain event action plan submitted. The contract unit price paid for rain event action plan includes full compensation for furnishing all labor, materials, tools, equipment, and incidentals and for doing all the work involved in preparing REAPs, including preparing and submitting REAP forms, and monitoring weather forecasts, as shown on the plans, as specified in the Standard Specifications and these special provisions, and as directed by the Engineer.

The Department does not adjust payment for an increase or decrease in the quantity of rain event action plan. Section 4-1.03B, "Increased or Decreased Quantities," of the Standard Specifications does not apply.

The Department pays $2,000 for each storm water annual report submitted. The contract unit price paid for storm water annual report includes full compensation for furnishing all labor, materials, tools, equipment, and incidentals, and for doing all the work involved in preparing and

submitting storm water annual reports, including annual certifications, monitoring reports, inspection, and sampling results, and obtaining acceptance of storm water annual reports, as shown on the plans, as specified in the Standard Specifications and these special provisions, and as directed by the Engineer.

The Department does not adjust payment for an increase or decrease in the quantity of storm water annual report. Section 4-1.03B, "Increased or Decreased Quantities," of the Standard Specifications does not apply.

The work to complete the final storm water annual report contract item is excluded from Section 7-1.17, "Acceptance of Contract," of the Standard Specifications.

If risk level 2 or 3, the contract unit price paid for storm water sampling and analysis day includes full compensation for furnishing all labor, materials, tools, equipment, and incidentals and for doing all the work involved in reporting on stormwater quality per storm events and qualifying rain events, including preparation, collection, analysis of stormwater samples for pH, turbidity, and other constituents, as shown on the plans, as specified in the Standard Specifications and these special provisions, and as directed by the Engineer. A single day of sampling is counted as 1 unit.

The Department does not adjust payment for an increase or decrease in the quantity of storm water sampling and analysis day. Section 4-1.03B, "Increased or Decreased Quantities," of the Standard Specifications does not apply.

The Department does not pay for the preparation, collection, laboratory analysis, and reporting of stormwater samples for nonvisible pollutants if water pollution control practices are not implemented before precipitation or if you fail to correct a water pollution control practice before precipitation.

For each failure to submit a completed storm water annual report, the Department withholds $10,000. This withhold is in addition to other withholds under Section 9-1.07E(3) "Performance Failure Withholds," of the Standard Specifications.

Each failure to comply with any part of these special provisions and each failure to implement water pollution control practices are considered separate performance failures.

ITEM NO. 4 - CONSTRUCTION SITE MANAGEMENT

GENERAL

Summary

This work includes controlling potential sources of water pollution before they come in contact with storm water systems or watercourses.

Control material pollution and manage waste and non-stormwater at the job site by implementing effective handling, storage, use, and disposal practices.

For information on documents specified in these special provisions, refer to the Department's Preparation Manual, Dewatering Guide, and BMP Manual.

Preparation Manual, Dewatering Guide, and BMP Manual are available from the Department's Construction Storm Water and Water Pollution Control web site at:

http://www.dot.ca.gov/hq/construc/stormwater/stormwater1.htm

Definitions and Abbreviations

Active and inactive areas: (1) Active areas have soil disturbing work activities occurring at least once within 14 days, and (2) Inactive areas are areas that have not been disturbed for at least 15 days.

BMP Manual: The Department's Construction Site Best Management Practices (BMP) Manual.

CDPH: California Department of Public Health

Dewatering Guide: The Department's Field Guide to Construction Site Dewatering.

ELAP: Environmental Laboratory Accreditation Program

Minor spills: Small quantities of oil, gasoline, paint, or other material that are small enough to be controlled by a first responder upon discovery of the spill.

MSDS: Material Safety Data Sheet

Preparation Manual: The Department's Storm Water Pollution Prevention Plan (SWPPP) and Water Pollution Control Program (WPCP) Preparation Manual.

Semi-significant spills: Spills that can be controlled by a first responder with help from other personnel.

Significant or hazardous spills: Spills that cannot be controlled by construction personnel.

WPC: Water Pollution Control

WPC Manager: Water Pollution Control Manager as defined under "Water Pollution Control" of these special provisions.

Submittals

Submit the following:

1. MSDS at least 5 days before material is used or stored
2. Monthly inventory records for material used or stored
3. Copy of written approval to discharge into a sanitary sewer system at least 5 days before beginning discharge activities

CONSTRUCTION

Spill Prevention and Control

Implement spill and leak prevention procedures for chemicals and hazardous substances stored at the job site. If you spill or leak chemicals or hazardous substances at the job site, you are responsible for all associated cleanup costs and related liability.
As soon as it is safe, contain and clean up spills of petroleum products, sanitary and septic waste substances listed under CFR Title 40, Parts 110, 117, and 302.

Minor Spills

Clean up minor spills using the following procedures:

1. Contain the spread of the spill
2. Recover the spilled material by absorption
3. Clean the contaminated area
4. Dispose of the contaminated material promptly and properly

Semi-significant Spills
Clean up semi-significant spills immediately by the following procedures:

1. Contain the spread of the spill
2. Recover the spilled material using absorption whenever a spill occurs on a paved surface or an impermeable surface
3. Contain the spill with an earthen dike and dig up the contaminated soil for disposal whenever a spill occurs on soil
4. If the spill occurs during precipitation, cover the spill with plastic or other material to prevent contaminated runoff
5. Dispose of the contaminated material promptly and properly

Significant or Hazardous Spills
Immediately notify qualified personnel of significant or hazardous spills. Do not let construction personnel attempt to clean up the spill until qualified staff has arrived. Do the following:

1. Notify the Engineer and follow up with a written report
2. Obtain the services of a spills contractor or hazardous material team immediately
3. Notify the local emergency response team by dialing 911 and county officials at the emergency phone numbers kept at the job site
4. Notify the Governor's Office of Emergency Services Warning Center at (805) 852-7550
5. Notify the National Response Center at (800) 424-8802 regarding spills of Federal reportable quantities under CFR Title 40, Parts 110, 119, and 302
6. Notify other agencies as appropriate, including:

    6.1. Fire Department
    6.2. Public Works Department
    6.3. Coast Guard
    6.4. Highway Patrol
    6.5. City Police or County Sheriff Department
    6.6. Department of Toxic Substances
    6.7. California Division of Oil and Gas
    6.8. Cal OSHA
    6.9. Regional Water Resources Control Board

Report minor, semi-significant, and significant spills to the WPC Manager. The WPC Manager must notify the Engineer immediately. The WPC Manager must oversee and enforce proper spill prevention and control measures.
Prevent spills from entering storm water runoff before and during cleanup. Do not bury spills or wash spills with water.
Keep material or waste storage areas clean, well organized, and equipped with enough cleanup supplies for the material being stored.

Material Management

General

Material must be delivered, used, and stored for this job in a way that minimizes or eliminates discharge of material into the air, storm drain systems, and watercourses.
Implement the practices described under "Material Management" of these special provisions while taking delivery of, using, or storing any of the following materials:

1. Hazardous chemicals including acids, lime, glues, adhesives, paints, solvents, and curing compounds
2. Soil stabilizers and binders
3. Fertilizers
4. Detergents
5. Plaster
6. Petroleum materials including fuel, oil, and grease
7. Asphalt components and concrete components
8. Pesticides and herbicides

Employees trained in emergency spill cleanup procedures must be present during the unloading of hazardous materials or chemicals.
If practicable, use less hazardous materials.

Material Storage

Use the following material storage procedures:

1. Store liquids, petroleum materials, and substances listed in CFR Title 40, Parts 110, 117, and 302 as specified by the Department, and place them in secondary containment facilities.
2. Secondary containment facilities must be impervious to the materials stored there for a minimum contact time of 72 hours.
3. Cover secondary containment facilities during non-working days and when precipitation is predicted. Secondary containment facilities must be adequately ventilated.
4. Keep secondary containment facility free of accumulated rainwater or spills. After precipitation, or in the event of spills or leaks, collect accumulated liquid and place into drums within 24 hours. Handle these liquids as hazardous waste under "Hazardous Waste" of these special provisions unless testing determines them to be nonhazardous.
5. Do not store incompatible materials, such as chlorine and ammonia, in the same secondary containment facility.
6. Store materials in the original containers with the original material labels maintained in legible condition. Replace damaged or illegible labels immediately.
7. Secondary containment facilities must have the capacity to contain precipitation from a 24-hour-long, 25-year storm, and 10 percent of the aggregate volume of all containers, or entire volume of the largest container within the facility, whichever is greater.
8. Store bagged or boxed material on pallets. Protect bagged or boxed material from wind and rain during non-working days and while precipitation is predicted.

9. Provide sufficient separation between stored containers to allow for spill cleanup or emergency response access. Storage areas must be kept clean, well organized, and equipped with cleanup supplies appropriate for the materials being stored.
10. Repair or replace perimeter controls, containment structures, covers, and liners as necessary. Inspect storage areas before and after precipitation, and at least weekly during other times.

Stockpile Management

Use the following stockpile management procedures:

1. Reduce or eliminate potential water pollution from stockpiled material including soil, paving material, and pressure treated wood.
2. Locate stockpiles:

    2.1. If within the floodplain, at least 100 feet from concentrated flows of storm water, drainage courses, and inlets unless approved
    2.2. If outside the floodplain, at least 50 feet from concentrated flows of storm water, drainage courses, and inlets unless approved

Install WPC practices within 15 days or before predicted precipitation, whichever occurs first.
Active and inactive soil stockpiles must be:

1. Covered with soil stabilization measures, plastic sheeting, or geosynthetic fabric
2. Surrounded with a linear sediment barrier

Portland cement concrete rubble, AC, HMA, AC and HMA rubble, aggregate base or aggregate sub-base stockpiles must be:

1. Covered with plastic sheeting, or geosynthetic fabric
2. Surrounded with a linear sediment barrier

Pressure treated wood stockpiles must be:

1. Placed on pallets
2. Covered with impermeable material

Cold mix asphalt concrete stockpiles must be:

1. Placed on impervious surface
2. Covered with impermeable material
3. Protected from run-on and runoff

Control wind erosion year round under Section 14-9.02, "Dust Control" of the Standard Specifications.
Repair or replace linear sediment barriers and covers as needed to keep them functioning properly. If sediment accumulates to 1/3 of the linear sediment barrier height, remove the sediment.

Waste Management

Solid Waste

Do not allow litter or debris to accumulate anywhere at the job site, including storm drain grates, trash racks, and ditch lines. Pick up and remove trash and debris from the job site at least once a week. The WPC Manager must monitor solid waste storage and disposal procedures at the job site.

If practicable, recycle nonhazardous job site waste and excess material. If recycling is not practicable, disposal must comply with Section 7-1.13, "Disposal of Material Outside the Highway Right of Way" of the Standard Specifications.

Furnish enough closed-lid dumpsters of sufficient size to contain any solid waste generated by work activities. When the refuse reaches the fill line, empty the dumpsters. Dumpsters must be watertight. Do not wash out dumpsters at the job site. Furnish additional containers and pick up dumpsters more frequent during the demolition phase of construction.

Solid waste includes:

1. Brick
2. Mortar
3. Timber
4. Metal scraps
5. Sawdust
6. Pipe
7. Electrical cuttings
8. Non-hazardous equipment parts
9. Styrofoam and other packaging materials
10. Vegetative material and plant containers from highway planting
11. Litter and smoking material, including litter generated randomly by the public
12. Other trash and debris

Furnish and use trash receptacles at the job site yard, field trailers, and locations where workers gather for lunch and breaks.

Hazardous Waste

Use hazardous waste management practices if waste is generated at the job site from the following substances:

1. Petroleum products
2. Asphalt products
3. Concrete curing compound
4. Pesticides
5. Acids
6. Paints
7. Stains
8. Solvents
9. Wood preservatives and treated posts
10. Roofing tar
11. Road flares
12. Lime

13. Glues and adhesives
14. Materials classified as hazardous by California Code of Regulations, Title 22, Division 4.5; or listed in CFR Title 40, Parts 110, 117, 261, or 302

The WPC Manager must oversee and enforce hazardous waste management practices. Minimize the production of hazardous materials and hazardous waste at the job site. If damaged, repair or replace perimeter controls, containment structures, and covers.
If hazardous material levels are unknown, use a laboratory certified by ELAP under CDPH to sample and test waste to determine safe methods for storage and disposal.
Separate potentially hazardous waste from nonhazardous waste at the job site. Hazardous waste must be handled, stored, and disposed of under California Code of Regulations, Title 22, Division 4.5, Section 66262.34; and in CFR Title 49, Parts 261, 262, and 263.
Store hazardous waste in sealed containers constructed and labeled with the contents and date accumulated under California Code of Regulations, Title 22, Division 4.5; and in CFR Title 49, Parts 172, 173, 178, and 179. Keep hazardous waste containers in temporary containment facilities under "Material Storage" of these special provisions.
Furnish containers with adequate storage volume at convenient locations for hazardous waste collection. Do not overfill hazardous waste containers. Do not mix hazardous waste. Do not allow potentially hazardous waste to accumulate on the ground. Store containers of dry waste that are not watertight on pallets. Store hazardous waste away from storm drains, watercourses, moving vehicles, and equipment.
Clean water based or oil based paint from brushes or equipment within a contained area and in a way that does not contaminate soil, watercourses, and storm drain systems. Handle and dispose of the following as hazardous waste: paints, thinners, solvents, residues, and sludges that cannot be recycled or reused. When thoroughly dry, dispose of the following as solid waste: dry, latex paint and paint cans, used brushes, rags, absorbent materials, and drop cloths.
Dispose of hazardous waste within 90 days of being generated. Use a licensed hazardous waste transporter to take hazardous waste to a Class I Disposal Site. Submit a copy of uniform hazardous waste manifest forms within 24 hours of transporting hazardous waste.
The WPC Manager must inspect the following daily:

1. Storage areas for hazardous materials and waste
2. Hazardous waste disposal and transporting activities
3. Hazardous material delivery and storage activities

Contaminated Soil

Identify contaminated soil from spills or leaks by noticing discoloration, odors, or differences in soil properties. Soil with evidence of contamination must be sampled and tested by a laboratory certified by ELAP.
If levels of contamination are found to be hazardous, handle and dispose of the soil as hazardous waste.
Prevent the flow of water, including ground water, from mixing with contaminated soil by using one or a combination of the following measures:

1. Berms
2. Cofferdams
3. Grout curtains

4. Freeze walls
5. Concrete seal course

If water mixes with contaminated soil and becomes contaminated, sample and test the water using a laboratory certified by ELAP. If levels of contamination are found to be hazardous, handle and dispose of the water as hazardous waste.

Concrete Waste

Use practices that will prevent the discharge of Portland cement concrete, AC, or HMA waste into storm drain systems or watercourses.
Collect and dispose of Portland cement concrete, AC, or HMA waste at locations where:

1. Concrete material, including grout, is used
2. Concrete dust and debris result from demolition
3. Sawcutting, coring, grinding, grooving, or hydro-concrete demolition of Portland cement concrete, AC, or HMA creates a residue or slurry
4. Concrete truck or other concrete-coated equipment is cleaned at the job site

Sanitary and Septic Waste

Do not bury or discharge wastewater from sanitary or septic systems within Department right-of-way. The WPC Manager must inspect sanitary or septic waste storage and monitor disposal procedures at least weekly. Sanitary facilities that discharge to the sanitary sewer system must be properly connected and free from leaks. Place sanitary facilities at least 50 feet away from storm drains, watercourses, and flow lines.
Obtain written approval from the local health agency, city, county, and sewer district before discharging from a sanitary or septic system directly into a sanitary sewer system, and submit a copy to the Engineer. Comply with local health agency provisions while using an on-site disposal system.

Liquid Waste

Use practices that will prevent job site liquid waste from entering storm drain systems or watercourses. Liquid waste includes the following:

1. Drilling slurries or fluids
2. Grease-free or oil-free wastewater or rinse water
3. Dredgings, including liquid waste from drainage system cleaning
4. Liquid waste running off a surface including wash or rinse water
5. Other non-stormwater liquids not covered by separate permits

Hold liquid waste in structurally sound, leak proof containers such as:

1. Roll-off bins
2. Portable tanks

Liquid waste containers must be of sufficient quantity and volume to prevent overflow, spills and leaks.
Store containers:

1. At least 50 feet from moving vehicles and equipment
2. If within the floodplain, at least 100 feet from concentrated flows of storm water, drainage courses, watercourses, and storm drain inlets unless approved
3. If outside the floodplain, at least 50 feet from concentrated flows of storm water, drainage courses, watercourses, and storm drain inlets unless approved

Remove and dispose of deposited solids from sediment traps under "Solid Waste" of these special provisions unless the Engineer approves another method.
Liquid waste may require testing to determine hazardous material content before disposal.
Drilling fluids and residue must be disposed of outside the highway right-of-way.
If an approved location is available within the job site, fluids and residue exempt under California Code of Regulations, Title 23, Section 2511(g) may be dried by evaporation in a leak proof container. Dispose of remaining solid waste under "Solid Waste" of these special provisions.

Non-Storm Water Management

Water Control and Conservation

Manage water used for work activities to prevent erosion or discharge of pollutants into storm drain systems or watercourses. Obtain approval before washing anything at the job site with water that could discharge into a storm drain system or watercourse. Report discharges immediately.
If water is used at the job site, implement water conservation practices. Inspect irrigation areas. Adjust watering schedules to prevent erosion, excess watering, or runoff. Shut off water source to broken lines, sprinklers, or valves, and repair breaks within 24 hours. If possible, reuse water from waterline flushing for landscape irrigation. Sweep and vacuum paved areas; do not wash them with water.
Direct job site water runoff, including water from water line repair, to areas where it can infiltrate into the ground and not enter storm drain systems or watercourses. Do not allow spilled water to escape water truck filling areas. If possible, direct water from off-site sources around the job site. Minimize the contact of off-site water with job site water.

Illegal Connection and Discharge Detection and Reporting

Inspect the job site and the site perimeter before starting work for evidence of illegal connections, discharges, or dumping. After starting work, inspect the job site and perimeter on a daily schedule.
Whenever illegal connections, discharges, or dumping are discovered, notify the Engineer immediately. Take no further action unless ordered by the Engineer. Assume unlabeled or unidentifiable material is hazardous.
Look for the following evidence of illegal connections, discharges, or dumping:

1. Debris or trash piles
2. Staining or discoloration on pavement or soils
3. Pungent odors coming from drainage systems
4. Discoloration or oily sheen on water
5. Stains or residue in ditches, channels or drain boxes
6. Abnormal water flow during dry weather
7. Excessive sediment deposits

8. Nonstandard drainage junction structures
9. Broken concrete or other disturbances near junction structures

Vehicle and Equipment Cleaning

Limit vehicle and equipment cleaning or washing at the job site except what is necessary to control vehicle tracking or hazardous waste. Notify the Engineer before cleaning vehicles and equipment at the job site with soap, solvents, or steam. Contain and recycle or dispose of resulting waste under "Liquid Waste" or "Hazardous Waste" of these special provisions, whichever is applicable. Do not use diesel to clean vehicles or equipment, and minimize the use of solvents.

Clean or wash vehicles and equipment in a structure equipped with disposal facilities. If using a structure is not possible, clean or wash vehicles and equipment in an outside area. The outside area must be:

1. Paved with AC, HMA, or concrete paving
2. Surrounded by a containment berm
3. Equipped with a sump to collect and dispose of wash water
4. If within the floodplain, located at least 100 feet from concentrated flows of storm water, drainage courses, watercourses, and storm drain inlets unless approved
5. If outside the floodplain, located at least 50 feet from concentrated flows of storm water, drainage courses, watercourses, and storm drain inlets unless approved

When washing vehicles or equipment with water, use as little water as possible. Hoses must be equipped with a positive shutoff valve.

Discharge liquid from wash racks to a recycle system or to another approved system. Remove liquids and sediment as necessary.

The WPC Manager must inspect vehicle and equipment cleaning facilities:

1. Daily if vehicle and equipment cleaning occurs daily
2. Weekly if vehicle and equipment cleaning does not occur daily

Vehicle and Equipment Fueling and Maintenance

If practicable, perform maintenance on vehicles and equipment off the job site.

If fueling or maintenance must be done at the job site, designate a site, or sites, and obtain approval before using. Minimize mobile fueling or maintenance.

If vehicle and equipment fueling and maintenance must be done at the job site, areas for the following activities must be:

1. On level ground
2. Protected from storm water run-on
3. If within the floodplain, located at least 100 feet from concentrated flows of storm water, drainage courses, watercourses, and storm drain inlets unless approved
4. If outside the floodplain, located at least 50 feet from concentrated flows of storm water, drainage courses, watercourses, and storm drain inlets unless approved

Use containment berms or dikes around the fueling and maintenance area. Keep adequate quantities of absorbent spill cleanup material and spill kits in the fueling and maintenance area

and on fueling trucks. Dispose of spill cleanup material and kits immediately after use. Use drip pans or absorbent pads during fueling or maintenance.
Fueling or maintenance activities must not be left unattended. Fueling nozzles must be equipped with an automatic shutoff control. Vapor recovery fueling nozzles must be used where required by the Air Quality Management District. When not in use, nozzles must be secured upright. Do not top-off fuel tanks.
Recycle or properly dispose of used batteries and tires.
The WPC Manager must inspect vehicle and equipment maintenance and fueling areas:

1. Daily when vehicle and equipment maintenance and fueling occurs daily
2. Weekly when vehicle and equipment maintenance and fueling does not occur daily

The WPC Manager must inspect vehicles and equipment at the job site for leaks and spills on a daily schedule. Operators must inspect vehicles and equipment each day of use.
If leaks cannot be repaired immediately, remove the vehicle or equipment from the job site.

Material and Equipment Used Over Water

Place drip pans and absorbent pads under vehicles or equipment used over water. Keep an adequate supply of spill cleanup material with the vehicle or equipment. If the vehicle or equipment will be idle for more than one hour, place drip pans or plastic sheeting under the vehicle or equipment on docks, barges, or other surfaces over water.
Furnish watertight curbs or toe boards on barges, platforms, docks, or other surfaces over water to contain material, debris, and tools. Secure material to prevent spills or discharge into water due to wind.

Structure Removal Over or Adjacent to Water

Do not allow demolished material to enter storm water systems or watercourses. Use approved covers and platforms to collect debris. Use attachments on equipment to catch debris on small demolition activities. Empty debris catching devices daily and handle debris under "Waste Management" of these special provisions.
The WPC Manager must inspect demolition sites within 50 feet of storm water systems or watercourses daily.

Paving, Sealing, Sawcutting, Grooving, and Grinding Activities

Prevent the following materials from entering storm drain systems or water courses:

1. Cementitious material
2. Asphaltic material
3. Aggregate or screenings
4. Grinding, grooving, or sawcutting residue
5. Pavement chunks
6. Shoulder backing
7. Methacrylate

Cover drainage inlets and use linear sediment barriers to protect downhill watercourses until paving, sealing, sawcutting, grooving, or grinding activities are completed and excess material

has been removed. Cover drainage inlets and manholes during the application of seal coat, tack coat, slurry seal, or fog seal.
If precipitation is predicted, limit paving, sawcutting, and grinding to places where runoff can be captured.
Do not start seal coat, tack coat, slurry seal, or fog seal activities if precipitation is predicted during the application or curing period. Do not excavate material from existing roadways during precipitation.
Use a vacuum to remove slurry immediately after slurry is produced. Do not allow slurry to run onto lanes open to traffic or off the pavement.
Collect residue from Portland cement concrete grinding and grooving activities with a vacuum attachment on the grinding machine. Do not leave any residue on the pavement or allow the residue to flow across the pavement.
If approved, material excavated from existing roadways may be stockpiled under "Stockpile Management" of these special provisions.
Do not coat asphalt trucks and equipment with substances that contain soap, foaming agents, or toxic chemicals.
When paving equipment is not in use, park over drip pans or plastic sheeting with absorbent material to catch drips.

Thermoplastic Striping and Pavement Markers

Thermoplastic striping and preheating equipment shutoff valves must work properly at all times.
Do not preheat, transfer, or load thermoplastic within 50 feet of drainage inlets or watercourses.
Do not fill a preheating container above a level that is 6 inches below the top. Truck beds must be cleaned daily of scraps or melted thermoplastic.
Do not unload, transfer, or load bituminous material for pavement markers within 50 feet of drainage inlets or watercourses. Release all pressure from a melting tank before removing the lid to fill or service. Do not fill a melting tank above a level that is 6 inches below the top.
Collect bituminous material from the roadway after marker removal.

Pile Driving

Keep spill kits and cleanup material at pile driving locations. Pile driving equipment must be parked over drip pans, absorbent pads, or plastic sheeting with absorbent material. If precipitation is predicted, protect pile driving equipment by parking on plywood and covering with plastic.
Store pile driving equipment when not in use. Stored pile driving equipment must be:

1. Kept on level ground
2. Protected from storm water run-on
3. If within the floodplain, at least 100 feet from concentrated flows of storm water, drainage courses, watercourses, and storm drain inlets unless approved
4. If outside the floodplain, at least 50 feet from concentrated flows of storm water, drainage courses, watercourses, and storm drain inlets unless approved

If practicable, use vegetable oil instead of hydraulic fluid.
The WPC Manager must inspect the pile driving area for leaks and spills:

1. Daily when pile driving occurs daily

2. Weekly when pile driving does not occur daily

Concrete Curing

Do not overspray chemical curing compound. Minimize the drift by spraying as close to the concrete as possible. Cover drainage inlets before applying the curing compound.
Minimize the use and discharge of water by using wet blankets or similar methods to maintain moisture while curing concrete.

Concrete Finishing

Collect and dispose of water and solid waste from high-pressure water blasting. Cover drainage inlets within 50 feet before sandblasting. Minimize drift of dust and blast material by keeping the nozzle close to the surface of the concrete. The blast residue may contain hazardous material.
Inspect concrete finishing containment structures for damage before each day of use and before predicted precipitation. Remove liquid and solid waste from containment structures after each work shift.

Sweeping

Sweeping must be done using hand or mechanical methods such as vacuuming.
Monitor paved areas and roadways within the job site for sediment and debris generating activities such as:

1. Clearing and grubbing
2. Earthwork
3. Trenching
4. Roadway structural section work
5. Vehicles entering and leaving the job site
6. Soil disturbing work
7. Work that causes offsite tracking of material

If sediment or debris is observed, perform sweeping:

1. Within:

    1.1. 8 hours of predicted rain
    1.2. 24 hours unless the Engineer approves a longer period

2. On paved roads at job site entrances and exit locations
3. On paved areas within the job site that flow to storm drains or receiving waters

You may stockpile collected material at the job site. Remove collected material including sediment from paved shoulders, drain inlets, curbs and dikes, and other drainage areas. If stockpiled, dispose of collected material at least once per week.
You may dispose of sediment within the job site that you collected during sweeping activities. Protect disposal areas against erosion.
Remove and dispose of trash collected during sweeping under Section 7-1.13, "Disposal of Material Outside the Highway Right of Way" of the Standard Specifications.

Dewatering

Dewatering consists of discharging accumulated storm water, ground water, or surface water from excavations or temporary containment facilities.

If dewatering and discharging activities are specified under a work item such as "Temporary Active Treatment System" or "Dewatering and Discharge," perform dewatering work as specified in the section involved.

If dewatering and discharging activities are not specified under a work item and you will be performing dewatering activities, you must:

1. Submit a Dewatering and Discharge Plan under Section 5-1.02, "Plans and Working Drawings," of the Standard Specifications and "Water Pollution Control" of these special provisions at least 10 days before starting dewatering activities. The Dewatering and Discharge Plan must include:

    1.1. Title sheet and table of contents
    1.2. Description of dewatering and discharge activities detailing locations, quantity of water, equipment, and discharge points
    1.3. Estimated schedule for dewatering and discharge (start and end dates, intermittent or continuous)
    1.4. Discharge alternatives such as dust control or percolation
    1.5. Visual monitoring procedures with inspection log

2. Conduct dewatering activities under the Department's "Field Guide for Construction Dewatering."
3. Ensure that any dewatering discharge does not cause erosion, scour, or sedimentary deposits that could impact natural bedding materials.
4. Discharge the water within the project limits. Dispose of the water in the same way as specified for material in Section 7-1.13 "Disposal of Material Outside the Highway Right of Way" of the Standard Specification if it cannot be discharged within project limits due to site constraints.
5. Do not discharge storm water or non-stormwater that has an odor, discoloration other than sediment, an oily sheen, or foam on the surface. Notify the Engineer immediately upon discovering any such condition.

The WPC manager must inspect dewatering activities:

1. Daily when dewatering work occurs daily
2. Weekly when dewatering work does not occur daily

PAYMENT

The contract lump sum price paid for construction site management includes full compensation for furnishing all labor, materials, tools, equipment, and incidentals and for doing all the work involved in spill prevention and control, material management, waste management, non-stormwater management, and dewatering and identifying, sampling, testing, handling, and

disposing of hazardous waste resulting from your activities, as specified in the Standard Specifications and these special provisions, and as ordered by the Engineer.

ITEM NO. 5 - TRAFFIC CONTROL SYSTEMS

Traffic Control Systems shall conform to the provisions in Section 6-10, "Traffic Control Requirements," of the City Standard Specifications, Section 12 "Construction Area Traffic Control Devices" of the State Standard Specifications, and these Special Provisions. Included in this bid item is the preparation of a traffic control plan and no additional compensation will be provided to the Contractor therefor.

Contactor shall be solely responsible for furnishing, installing and maintaining all warning signs and devices necessary to safeguard the general public and the work and for providing proper and safe routing of the vehicular and pedestrian traffic during the performance of the work. This requirement shall apply continuously and shall not be limited to working hours. The use of flaggers, barricades and construction signing shall comply with the current Manual on Uniform Traffic Control Devices (MUTCD), California Edition.

The Contractor shall install temporary traffic handling devices as shown on the plans and as specified in these special provisions.

In addition to the requirements specified in this section of the Standard Specifications, the following shall apply:

Whenever the work causes obliteration of pavement delineation, temporary pavement delineation shall be in place prior to opening the traveled way to public traffic. Centerline pavement delineation shall be provided at all times for traveled ways open to public traffic.

The Contractor shall perform all work necessary to establish satisfactory lines for temporary pavement delineation. Surfaces on which temporary pavement delineation is to be applied shall be cleaned of all dirt and loose materials and shall be dry when the pavement delineation is applied. Temporary pavement delineation shall not be applied over existing pavement delineation or other temporary pavement delineation.

Temporary pavement delineation shall be maintained until replaced with permanent pavement delineation. Temporary pavement delineation shall be removed when, as determined by the Engineer, the temporary pavement delineation conflicts with the permanent pavement delineation or with a new traffic pattern for the area and is no longer required for the direction of public traffic. When temporary pavement delineation is required to be removed, all lines and marks used to establish the alignment of the temporary pavement delineation shall be removed.

Temporary reflective raised pavement markers shall be placed in accordance with the manufactures instructions. Temporary reflective raised pavement markers shall be cemented to the surface with the adhesive recommended by the manufacturer. Epoxy adhesive shall not be used to place temporary markers in areas where removal of the markers will be required.

PUBLIC CONVENIENCE

All work within public streets and/or roadway rights-of-way shall be done in an expeditious manner and cause as little inconvenience to the traveling public as possible. Vehicles, bicycles, and pedestrians must be allowed to pass at all times except during an emergency closure.

VEHICLE, PEDESTRIAN AND BICYCLIST ACCESS

The Contractor shall not block the movement of vehicle pedestrian or bicycle traffic. The Contractor shall provide for pedestrian and bicycle traffic by phasing construction operations or by providing alternative pedestrian and bicyclist access through or adjacent to construction areas. Proper advance notice signage with reasonable detours shall be installed and maintained through all phases of construction. At no time shall pedestrians be diverted into a portion of the street used for vehicular traffic or on to private property unless adequate lane closure signage is in place. Vehicle, Pedestrian and bicycle access shall consist of one delineated twelve-foot (12') wide travel lane in the westbound direction and one six-foot (6') wide bridges across trenches and six-foot (6') wide passageways through the construction areas at all times. These passageways shall provide a delineated 6' wide path for pedestrians to travel from the intermodal site to old Sacramento at all times. The 12' wide travel lane shall provide a west outlet from the depot parking lot to 2nd Street and shall be provided at all times.

Hand railings for pedestrians shall be provided when required by Cal/OSHA Regulations or the Americans with Disabilities Act (ADA) on each side of each bridge or passageway to protect pedestrians from hazards caused by construction operations or adjacent vehicular traffic. Railings or barricades, which border passageways located in roadway areas, shall be reflectorized on the side facing oncoming traffic.

WRITTEN NOTIFICATION TO RESIDENCES AND BUSINESSES

The Contractor shall notify, in writing, residents and business establishments along the route of the Work at least ten (10) Working Days prior to road closures and at least three (3) Working Days prior to disruption of ingress and egress. The notice provided to the residences or businesses shall include, at a minimum, schedule of closures with estimated closure times, closure location, alternate route or detour, and name and twenty-four (24) hour phone number of a contact person employed by the Contractor.

The Contractor shall notify, in writing, residents and business establishments along the route of the Work at least three (3) Working Days prior to placing parking restrictions within the City right-of-way. The notice provided to the residences or businesses shall include, at a minimum, schedule of parking restrictions with estimated times, location, and a name and twenty-four (24) hour phone number of a contact person employed by the Contractor.

ACCESS TO DRIVEWAYS, HOUSES AND BUILDINGS

Access and passable grades shall be maintained at all times for business establishments during construction. Safe and passable pedestrian, bicyclist, and vehicular access shall be provided and maintained to fire hydrants, homes, commercial and industrial establishments. Access to these facilities shall be continuous and unobstructed unless otherwise approved. Ramps and driveways shall not have "lips" or elevation differences greater than three-eighths of an inch (3/8"). When

abutting property owner's access across the right-of-way line is to be eliminated, repaired, or replaced under the Contract, the existing access shall not be closed until their replacement access facilities are completed and functional.

PROPERTY DAMAGE

Any property damage caused by the Contractor shall be repaired at the Contractor's expense to the satisfaction of the Agency.

ERECTION OF SIGNS TO EXPEDITE PASSAGE OF VEHICLES

The Contractor shall erect such warning and directional signs as necessary or as directed by the Engineer for expediting the passage of public traffic through or around the Work and the approaches.

TRAFFIC OBSTRUCTIONS, DELAYS AND INCONVENIENCES

All public traffic shall be permitted to pass through the Work and the Contractor shall conduct operations that offer the least possible obstruction, delay, and inconvenience to the public.

WORK ON PRIVATE PROPERTY

The Contractor must obtain written permission from the owner of any privately owned property prior to beginning any work, storing materials or otherwise conducting any operations on said property. The written approval from the property owner must be on file with the Engineer before any operations will be permitted on said property.

HAZARDOUS CONDITIONS CREATED

Whenever the Contractor's operations create a condition hazardous to pedestrians, bicyclists, or the traveling public, the Contractor shall, at the Contractor's own expense, furnish, erect and maintain any fences, covers, temporary railing (Type K), barricades, lights, signs and other devices necessary or as directed by the Agency to prevent accidents or damage or injury to the public or property.

If needed for public use, roadway excavation shall be conducted to maintain a smooth and even surface satisfactory for use by public traffic at all times. This includes creating a temporary AC conform between the proposed concrete roadway and existing conditions during each construction stage and the laying of temporary AC to facilitate temporary parking during construction as shown on the plans. The surface of the roadbed shall be kept in a smooth, even condition free of humps and depressions, satisfactory for the use of public traffic as determined by the Agency.

Temporary facilities that the Contractor uses to perform the Work or store or stage material or equipment shall not be installed or placed where they will interfere with the free and safe passage of public vehicular, bicycle, or pedestrian traffic.

The contractor may not park private vehicles in parking stalls located within project limits during construction. An administrative penalty of $500 may be assessed against the contractor per incident as directed by the Engineer.

TRAFFIC CONTROL PLAN

The Contractor shall submit a site specific Traffic Control Plan to the Engineer at the pre-construction meeting in accordance with Section 6-10 of the City Standard Specifications. Revisions to the plan shall be submitted on Thursday prior to work. A copy of the Traffic Control Plan shall be available on site at all times. The Traffic Control Plan shall be developed within the following parameters:

1. No work will be allowed if the Contractor does not adhere to these traffic control guidelines.

2. The Contractor shall provide continuous businesses access (for loading operations, pedestrian traffic and safety vehicles) during the businesses' hours of operations. If two driveways access a single business, one driveway must remain open at all times. If a single driveway or loading dock access a business, half of the driveway or loading dock must remain open at all times.

3. Vehicular traffic must be maintained at all times as shown in the Plans unless otherwise approved by the Engineer.

4. Construction shall occur between the hours of 8:30am and 4:00pm, lane closures shall occur between 8:30 am and 3:00 pm on I Street. Night and weekend work will be prohibited unless approved by the Engineer.

5. All work is to be done in accordance with City of Sacramento noise ordinances, per Section 6 in the City Standard Specifications.

Prior to 8:30 AM and after 3:00 PM Monday through Friday, public traffic must have access to the number of lanes normally available on I Street, unless otherwise approved by the Engineer.

Fourteen (14) calendar days prior to affecting circulation in the depot parking lot, changeable message signs shall be placed in the depot parking lot warning of delays. These changeable message signs shall be displayed at least until the fourteen calendar days have passed. In addition, Five (5) calendar days prior to roadway or lane closures, changeable message signs shall be placed where designated by the Engineer. The message on the changeable message sign shall be approved in writing by the Engineer two days prior to installment on the roadway. **If the Contractor fails to install changeable message signs per these guidelines, the Contractor shall pay $1,000 per day per street as administrative penalty, for each day the work is being performed.**

Portable changeable message signs shall be furnished, placed, operated, and maintained at those locations shown on the plans or where designated by the Engineer in conformance with the

provisions in Section 12, "Construction Area Traffic Control Devices," of the State Standard Specifications and these special provisions.

At night and at other times when work is not in progress, the full roadway shall be available to the public unless otherwise approved. **If the Contractor fails to have all normally available lanes open as required by these Special Provisions, the Contractor shall pay an administrative penalty of $1,000 every fifteen (15) minutes until the required number of lanes are open for use.**

Lane closures shall be in conformance with an approved traffic control plan, and as directed by the Engineer. Way finding signs will be required to direct traffic from the depot parking lot to the 2nd street parking lot.

Placement and removal of the temporary traffic stripes and markings (place 2-coat paint 4" wide white stripe and place 2-coat paint pavement marking) required in each stage of construction shall be considered part of this item and no additional compensation will be allowed therefor.

Removal of any existing conflicting pavement stripes or makings shall be considered part of this item and no additional compensation will be allowed therefore.

Relocation of roadway signs from their current location to a temporary location needed for stage construction and all relocations needs during construction including temporary barricades shall be considered part of this item and no additional compensation will be awarded therefor.

If any component in the traffic control system is displaced or ceases to operate or function as specified, from any cause during the progress of the work, the Contractor shall immediately repair said component to its original condition or replace said component and shall restore the component to its original location.

When lane closures are made for work periods only, at the end of each work period all components of the traffic control system, except portable delineators placed along open trenches or excavation adjacent to the traveled way, shall be removed from the traveled way and shoulder. If the Contractor so elects, said components may be stored at selected central locations, approved by the Engineer, within the limits of the roadway right-of-way.

TEMPORARY PAVEMENT DELINEATION

Temporary pavement delineation shall be furnished, placed, maintained, and removed in conformance with the provisions in Section 12-3.01, "General," of the Standard Specifications and these special provisions. Nothing in these special provisions shall be construed as reducing the minimum standards specified in the California MUTCD or as relieving the Contractor from the responsibilities specified in Section 7-1.09, "Public Safety," of the State Standard Specifications.

GENERAL

When the work causes obliteration of pavement delineation, temporary or permanent pavement delineation shall be in place before opening the traveled way to public traffic. Laneline or centerline pavement delineation shall be provided for traveled ways open to public traffic.

Work necessary, including required lines or markers, to establish the alignment of temporary pavement delineation shall be performed by the Contractor. Surfaces to receive application of paint or removable traffic tape temporary pavement delineation shall be dry and free of dirt and loose material. Temporary pavement delineation shall not be applied over existing pavement delineation or other temporary pavement delineation. Temporary pavement delineation shall be maintained until superseded or replaced with a new pattern of temporary pavement delineation or permanent pavement delineation, or as determined by the Engineer.

Temporary pavement markers and removable traffic tape that conflicts with a new traffic pattern or that is applied to the final layer of surfacing or existing pavement to remain in place shall be removed when no longer required for the direction of public traffic, as determined by the Engineer.

Temporary pavement delineation shall be used on or adjacent to lanes open to public traffic for a maximum of 14 days. Before the end of the 14 days, the permanent pavement delineation shall be placed. If the permanent pavement delineation is not placed within the 14 days, additional temporary pavement delineation shall be provided by the Contractor at no additional cost to the Department. The additional temporary pavement delineation to be provided shall be equivalent to the pattern specified for the permanent pavement delineation for the area, as determined by the Engineer.

Painted traffic stripe used for temporary delineation shall conform to Section 84-3, "Painted Traffic Stripes and Pavement Markings," of the Standard Specifications, except for payment. The number of coats shall be, at the option of the Contractor, either one or 2 coats. The quantity of painted traffic stripe used for temporary delineation will not be included in the quantities of paint traffic stripe to be paid for.

TEMPORARY LANELINE AND CENTERLINE DELINEATION

When lanelines or centerlines are obliterated, the minimum laneline and centerline delineation to be provided shall be temporary pavement markers placed at longitudinal intervals of not more than 24 feet. The temporary pavement markers shall be the same color as the laneline or centerline the markers replace. Temporary pavement markers shall be, at the option of the Contractor, one of the temporary pavement markers listed for short term day/night use (14 days or less) or long term day/night use (6 months or less) in "Prequalified and Tested Signing and Delineation Materials" of these special provisions. Temporary pavement markers shall be placed in conformance with the manufacturer's instructions and shall be cemented to the surfacing with the adhesive recommended by the manufacturer, except epoxy adhesive shall not be used to place pavement markers in areas where removal of the markers will be required.

Temporary laneline or centerline delineation consisting entirely of temporary pavement markers shall be placed on longitudinal intervals of not more than 24 feet.

Full compensation for furnishing, placing, maintaining, and removing temporary delineation and markers as shown on the plans and as outlined above shall be considered as included in the contract prices paid for Traffic Control System.

CONSTRUCTION AREA SIGNS

Construction Area Signs shall be furnished, installed, maintained, and removed when no longer required in accordance with the provisions in Section 12, "Construction Area Traffic Control Devices," of the State Standard Specifications, these Special Provisions, Section 32 of the City Standard Specifications, and as shown on the Stage Construction sheets of the plans.

Compensation for Construction Area Signs shall include the fabrication, installation, maintenance and removal of the signs and shall be consistent with these special provisions.

The Contractor shall notify UNDERGROUND SERVICE ALERT (USA) by calling 1-800-642-2444 at least 2 working days, but not more than 14 calendar days, prior to commencing any excavation for construction area sign posts.

All excavation required to install construction area signs shall be performed by hand methods without the use of power equipment. Care shall be used in performing excavation for signs in order to protect underground facilities.

Full compensation for all labor, materials, tools, equipment and incidentals, and for doing all work involved with furnishing, placing, maintaining, and removing construction area signs as specified in these Special Provisions, State Standard Specifications and as directed by the Engineer shall be included in the various items of work and no separate or additional compensation shall be made.

The contract lump sum price paid for Traffic Control System shall include full compensation for furnishing all labor, including all flagging costs, material (including message signs and construction area signs), tools, equipment and incidentals, and for doing all the work involved in directing traffic and in placing, removing, storing, maintaining, moving to new locations, replacing and disposing of the components of the traffic control system as shown on the plans, as specified in the State Standard Specifications, City Standard Specification, these Special Provisions and as shown on the traffic control plans submitted by the Contractor and accepted by the Engineer.

Full compensation for furnishing, placing, maintaining, and removing temporary pavement markers used for temporary laneline and centerline delineation and for providing equivalent patterns of permanent traffic lines for these areas when required shall be considered as included in the contract prices paid for the items of work that obliterated the laneline and centerline pavement delineation and no separate payment will be made therefor.

Full compensation for furnishing, placing, and maintaining temporary painted laneline and centerline pavement delineation shall be considered as included in the contract prices paid for the items of work that obliterated the laneline and centerline pavement delineation and no separate payment will be made therefor.

ITEM NO. 6 - CLEARING AND GRUBBING

Clearing and grubbing shall conform to Section 12 and 13 of the Standard Specifications and these Special Provisions. The removal of the existing roadway pavement, base, native material,

curb, gutter and sidewalk shall be part of the "Roadway Excavation and Grading" item and shall not be paid for under this item.

Sprinkler/irrigation system pipes and heads, that are not shown on the plans to be relocated, which interfere with proposed improvements shall be relocated to the right-of-way line as part of this item. The property owner shall be notified in writing of the relocation two (2) working days prior to its initiation. The existing sprinkler/irrigation system relocation shall be completed within three (3) working days of the initiation of work. Salvaged irrigation material shall be returned to the property owner along with other privately owned facilities shown on the Plans to be removed. All other excess material shall become the property of the Contractor and be disposed of away from the project site.

Payment shall be at the lump sum bid and shall include full compensation for furnishing all labor, materials, tools, equipment, incidentals and for doing all work involved in clearing and grubbing as shown on the Plans, as specified in these Special Provisions and as directed by the Engineer.

ITEM NO. 7 - BOLLARD TO REMOVE

Existing bollards shall be removed as shown on the plans or as directed by the Engineer and shall conform to Section 13 of the Standard Specifications. Voids created by the removal of bollards shall be backfilled per Section 9.20 (Backfilling of Voids) of these Special Provisions.

Payment shall be at the unit price bid per each bollard to remove and shall include full compensation for furnishing all labor, material, tools, equipment, and incidentals and for doing all work involved in removing bollards as specified in these Special Provisions and as directed by the Engineer.

ITEM NO. 8 - TRAFFIC STRIPE & PAVEMENT MARKINGS TO REMOVE

Existing traffic stripes and pavement markings shall be removed within the limits shown on the plans, in conformance with Section 15-2.02B "Traffic Stripes and Pavement Markings" of the State Standard Specifications, these Special Provisions, and as directed by the Engineer.

The contract Lump Sum price paid for Traffic Stripe & Pavement Markings to Remove shall include full compensation for furnishing all labor, materials, tools, equipment, and incidentals and for doing all the work involved in Traffic Stripe & Pavement Markings to Remove, as shown on the plans, as specified in the Standard Specifications, and as directed by the Engineer.

ITEM NO. 9 - PAVEMENT MARKERS TO REMOVE

Existing pavement markers, including underlying adhesive, when no longer required for traffic lane delineation as determined by the Engineer, shall be removed and disposed of, in conformance with Section 15-2.02C "Pavement Markers" of the State Standard Specifications, these Special Provisions, and as directed by the Engineer.

The contract Lump Sum paid for Remove Pavement Marker shall include full compensation for furnishing all labor, materials, tools, equipment, and incidentals and for doing all the work involved in

Remove Pavement Marker as shown on the plans, as specified in the Standard Specifications, and as directed by the Engineer.

ITEM NO. 10 - PEDESTRIAN BOARDWALK TO REMOVE

Existing pedestrian boardwalk shall be removed and disposed of to the limits shown on the plans or as directed by the Engineer and shall conform to Section 13 of the Standard Specifications. The boardwalk shall be removed to the nearest full plank at the station called out on the plans. Voids created by the removal of the pedestrian boardwalk shall be backfilled per Section 9.20 (Backfilling of Voids) of these Special Provisions.

Payment shall be at the unit price bid per square foot of pedestrian boardwalk to remove and shall include full compensation for furnishing all labor, material, tools, equipment, and incidentals and for doing all work involved in removing and disposing of pedestrian boardwalk as shown on the plans as specified in these Special Provisions and as directed by the Engineer.

ITEM NO. 11 - CONCRETE CURB, GUTTER AND SIDEWALK TO REMOVE

ITEM NO. 12 - CONCRETE CURB TO REMOVE

ITEM NO. 13 - CONCRETE VALLEY GUTTER TO REMOVE

ITEM NO. 14 - CONCRETE ISLAND TO REMOVE

ITEM NO. 15 - CONCRETE TUNNEL HEADWALL AND WINGWALLS TO REMOVE

Concrete curbs, gutters, sidewalks, islands, headwalls, wingwalls and other concrete facilities designated on the plans to be removed, shall be removed in accordance with Section 13-3 and 14 of the City Standard Specifications, Section 15-3 "Removing Concrete" of the State Standard Specifications, these Special Provisions, and as directed by the Engineer.

Concrete removal shall be paid for as outlined on the Concrete Removal and Roadway Excavation details shown on the plans, and shall be disposed of outside of the highway right of way in accordance with the provisions in Section 7-1.13 of the Standard Specifications.

Where no joint exists between concrete to be removed and concrete to remain in place, the concrete shall be cut in a neat line to a minimum depth of 0.17-foot with a power driven saw before concrete is removed.

Payment shall be at the unit price bid per linear foot for Concrete Curb to Remove shall include full compensation for furnishing all labor, materials, tools, equipment, and incidentals for doing all the work involved, complete in place, as shown on the plans, as specified in the Standard Specifications and these special provisions, and as directed by the Engineer.

Payment shall be at the unit price bid per square foot for Concrete Curb, Gutter and Sidewalk to Remove, Concrete Valley Gutter to Remove, Concrete Island to Remove and Concrete Tunnel Headwall and Wingwalls to Remove shall include full compensation for furnishing all labor, materials, tools, equipment, and incidentals for doing all the work involved, complete in place, as shown on the plans, as specified in the Standard Specifications and these special provisions, and as directed by the Engineer.

ITEM NO. 16 - EXISTING FENCE TO REMOVE

In addition to the requirements of Section 13-3 of the City Standard Specifications, Section 15-2 "Miscellaneous Highway Facilities" of the State Standard Specifications, and as directed by the Engineer, the Contractor shall remove the existing fence as shown on the plans.

Full compensation for conforming to all requirements specified in this section shall be considered as included in the contract unit price paid per lineal foot for Existing Fence to Remove and no additional compensation will be allowed.

ITEM NO. 17 - EXISTING GATE TO REMOVE

In addition to the requirements of Section 13-3 of the City Standard Specifications, Section 15-2 "Miscellaneous Highway Facilities" of the State Standard Specifications, and as directed by the Engineer, the Contractor shall remove the existing gate as shown on the plans.

Full compensation for conforming to all requirements specified in this section shall be considered as included in the contract unit price paid per each for Existing Gate to Remove and no additional compensation will be allowed.

ITEM NO. 18 - STORM DRAIN INLET TO REMOVE

The Contractor shall remove inlets where shown on the Plans, as directed by the Engineer, and in accordance with Sections 13 and 14 of the City Standard Specifications, Section 15-3 "Remove Concrete" of the State Standard Specifications, these Special Provisions, and as directed by the Engineer.

All drain inlet pipe abandoned in place shall be plugged at both ends with two feet of Portland Cement Concrete (PCC). All removed pipe shall become the property of the Contractor and shall be disposed of away from the project site.

Backfilling shall be in accordance with the methods set forth in the State Specification. The relative compaction shall be at least ninety percent (90%), unless otherwise indicated.

Concrete removed shall be disposed of outside the right of way in accordance with the provisions in Section 7-1.13 of the State Specifications.

The existing grates shall be cleaned of all foreign material and delivered to the City of Sacramento Corporation Yard, Division of Field Services, 5730 24th Street, Attention: Jeff Heard, Drainage Superintendent (916) 433-6223.

Payment shall be at the unit price bid per each and shall include full compensation for all labor, materials, tools, equipment and incidentals and for doing all work involved in removing inlet as shown on the Plans as specified in these Special Provisions and as directed by the Engineer.

ITEM NO. 19 - PARKING BOOTH TO REMOVE

Existing parking booths shall be removed and disposed of as shown on the plans or as directed by the Engineer and shall conform to Section 13 of the Standard Specifications. Voids created by the removal of parking booths shall be backfilled per Section 9.20 (Backfilling of Voids) of these Special Provisions.

Payment shall be at the unit price bid per each parking booth to remove and shall include full compensation for furnishing all labor, material, tools, equipment, and incidentals and for doing all work involved in removing and disposing of parking booth as shown on the plans as specified in these Special Provisions and as directed by the Engineer.

ITEM NO. 20 - PAY STATION SHELTER TO RELOCATE

The Contractor shall relocate existing pay station shelters to the new locations shown on plans, as directed by the Engineer, and in accordance with Section 13 and 14 of the City Standard Specifications, Section 15 "Existing Highway Facilities" of the State Standard Specifications, these Special Provisions, and as directed by the Engineer.

If the pay station shelter is not relocated on the same day it is removed the pay station shall be kept in a safe and secure location where it will not be damaged. At the Contractor's option the existing anchor bolts and hardware used to secure the shelter to the ground may be removed and new anchor bolts and hardware used at the new location.

Payment shall be at the unit price bid per each and shall include full compensation for all labor, materials, tools, equipment and incidentals and for doing all work involved in relocating the pay station shelter as shown on the Plans, as specified in these Special Provisions and as directed by the Engineer.

ITEM NO. 21 - PURPLE MARTIN POLE TO RELOCATE

The Contractor shall relocate existing purple martin poles to the new locations shown on plans, as directed by the Engineer, and in accordance with Section 13 and 14 of the City Standard Specifications, Section 15 "Existing Highway Facilities" of the State Standard Specifications, these Special Provisions, and as directed by the Engineer.

If the purple martin poles are not relocated on the same day they are removed the pay station shall be kept in a safe and secure location where they will not be damaged. At the Contractor's option the existing poles and hardware may be removed and new poles and hardware used at the new location.

Payment shall be at the unit price bid per each and shall include full compensation for all labor, materials, tools, equipment and incidentals and for doing all work involved in relocating the purple martin poles as shown on the Plans, as specified in these Special Provisions and as directed by the Engineer.

ITEM NO. 22 - STORM DRAIN PIPE TO ABANDON

The Contractor shall abandon existing pipes where shown on plans, as directed by the Engineer, and in accordance with Section 14 of the Standard Specifications and these Special Provisions.

All pipe abandoned in place shall be plugged at each open end with two feet of Portland Cement Concrete (PCC).

Payment shall be at the unit price bid per linear foot and shall include full compensation for all labor, materials, tools, equipment and incidentals and for doing all work involved in abandoning storm drain pipes as shown on the Plans as specified in these Special Provisions and as directed by the Engineer.

ITEM NO. 23 - ROADWAY EXCAVATION AND GRADING

Excavation and grading shall conform to Section 14 of the City Standard Specifications and these Special Provisions.

Excavation shall include sawcutting and removal of all aggregate base (AB), native material, railroad ballast, and soil to allow construction of improvements to the lines and grades shown on the Plans. This item shall include grading behind the proposed sidewalk necessary to match the existing grades and improvements.

This work shall include excavation and grading necessary to construct the proposed street section, ditch grading and ditches, median, curb, gutter, sidewalk, driveways, walkways and shall include finish grading to match the back of sidewalk to surrounding grade using a maximum 4:1 slope or as per the construction plans. This work shall include shaping and trimming of slopes, and the placement and compaction of excavated earth material to the lines and grades shown on the Plans.

The Contractor shall exercise extreme care to avoid damaging the curb and gutter lips, sidewalks, and planting areas during excavation operations. Gutter lips damaged by the Contractor which are spalled in excess of one inch (1") deep by five inches (5") long will be repaired at the Engineer's direction. The cost of repairs to damaged curb and gutter shall be considered as included in this item, and no separate payment shall be made therefore.

Excess excavated material shall be deposited in a location and manner satisfactory to the Engineer. When any material is to be disposed of outside the right-of-way, the Contractor shall obtain written permission from the owner upon whose property the disposal is to be made before any material is deposited thereon.

Payment shall be based on final pay quantity per cubic yard and shall include full compensation for furnishing all labor, materials, tools, equipment, incidentals, and for doing all work involved with roadway excavation and grading as shown on the Plans, as specified in these Special Provisions and as directed by the Engineer.

ITEM NO. 24 - AGGREGATE BASE CLASS 2 TO PLACE

Class 2 aggregate base shall be placed as shown on the Plans and conform to Sections 10 and 17 of the Standard Specifications and these Special Provisions.

This item shall include placing Class 2 aggregate base in the pavement section, shoulder area, and under the proposed curb, gutter, sidewalk and driveways.

Payment shall be made at the unit price bid per ton based on the weight tickets and shall include full compensation for furnishing all labor, materials, tools, equipment, incidentals and for doing all work involved in placing aggregate base Class 2 as shown on the Plans, as specified in these Special Provisions and as directed by the Engineer.

ITEM NO. 25 - CURB AND GUTTER TYPE 1 TO CONSTRUCT

Portland cement concrete curb and gutter type 1 shall be constructed as shown on the Plans or as directed by the Engineer and shall conform to the applicable requirements of Sections 10, 24 and 38 (DWG. T-11) of the Standard Specifications.

The curb and gutter portion of the curb ramps and transitions to existing curb and gutter of a different type shall be paid for with this item of work.

The new concrete curb and gutter shall match existing improvements. The curb and gutter shall match existing color.

Payment shall be at the unit price bid per lineal foot and shall include full compensation for furnishing all labor, materials, tools, equipment and incidentals, and for doing all work involved in constructing curb and gutter type 1 as shown on the Plans, as specified in these Special Provisions and as directed by the Engineer.

ITEM NO. 26 - CURB AND GUTTER TYPE 2 TO CONSTRUCT

Portland cement concrete curb and gutter type 2 shall be constructed as shown on the Plans or as directed by the Engineer and shall conform to the applicable requirements of Sections 10, 24 and 38 (DWG. T-11) of the Standard Specifications.

The curb and gutter portion of the curb ramps and transitions to existing curb and gutter of a different type shall be paid for with this item of work.

Payment shall be at the unit price bid per lineal foot and shall include full compensation for furnishing all labor, materials, tools, equipment and incidentals, and for doing all work involved in constructing curb and gutter type 2 as shown on the Plans, as specified in these Special Provisions and as directed by the Engineer.

ITEM NO. 27 - CURB TYPE 3 TO CONSTRUCT

Portland cement concrete curb type 3 shall be constructed as shown on the Plans or as directed by the Engineer and shall conform to the applicable requirements of Sections 10, 24 and 38 (DWG. T-11) of the Standard Specifications.

Payment shall be at the unit price bid per lineal foot and shall include full compensation for furnishing all labor, materials, tools, equipment and incidentals, and for doing all work involved

in constructing curb type 3 as shown on the Plans, as specified in these Special Provisions and as directed by the Engineer.

ITEM NO. 28 - CURB TYPE 3 (MODIFIED) TO CONSTRUCT

Portland cement concrete curb type 3 (modified) shall be constructed as shown on the Plans or as directed by the Engineer and shall conform to the applicable requirements of Sections 10 and 24 of the Standard Specifications.

Payment shall be at the unit price bid per lineal foot and shall include full compensation for furnishing all labor, materials, tools, equipment and incidentals, and for doing all work involved in constructing curb type 3 (modified) as shown on the Plans, as specified in these Special Provisions and as directed by the Engineer.

ITEM NO. 29 - WHEEL STOP TO INSTALL

Wheel stops shall be furnished and installed at the locations and in the manner shown on the plans.

Wheel stops shall be precast with concrete and reinforcing steel as shown on the plans. Concrete shall be minor concrete conforming to the provisions in Section 90-10, "Minor Concrete," of the Standard Specifications. Concrete shall contain not less than 472 pounds of cementitious material per cubic yard. Wheel stops may be commercially available precast concrete wheel stops conforming to the details shown on the plans. Minor variations in cross section dimensions will be acceptable in commercially available units.

Dowels shall be commercial quality reinforcing steel or mild steel rods.

Wheel stops will be measured by the unit as determined from actual count in place.

Payment shall be at the unit price paid for wheel stops (precast concrete) shall include full compensation for furnishing all labor, materials, tools, equipment, and incidentals, and for doing all the work involved in installing precast concrete wheel stops, complete in place, as shown on the plans, as specified in the Standard Specifications and these special provisions and as directed by the Engineer.

ITEM NO. 30 - PCC EDGE WALL TO CONSTRUCT

Portland cement concrete edge wall shall be constructed as shown on the Plans or as directed by the Engineer and shall conform to the applicable requirements of Sections 10 and 24 of the City Standard Specifications, Section 51 "Concrete Structures" of the State Standard Specifications, and these Special Provisions.

Payment shall be at the unit price bid per lineal foot and shall include full compensation for furnishing all labor, materials, tools, equipment and incidentals, and for doing all work involved in constructing edge wall as shown on the Plans, as specified in these Special Provisions and as directed by the Engineer.

ITEM NO. 31 - CONCRETE STAIRWAY TO CONSTRUCT

Portland cement concrete stairway shall be constructed as shown on the Plans or as directed by the Engineer and shall conform to the applicable requirements of Sections 10 and 24 of the City Standard Specifications, Section 51 "Concrete Structures" of the State Standard Specifications, and these Special Provisions.

Abrasive nosing for cast in place portland concrete cement stairs shall be ADA compliant, constructed of cast aluminum with an abrasive surface or abrasive insert, and designed for exterior use as shown on the plans. Abrasive nosing shall be installed per manufacturers requirements.

Staircase walkways, staircase treads and landings shall receive a nonskid abrasive aggregate finish, consisting of commercial quality aluminum oxide, silicon carbide or almandite garnet grit particles, sieve size No. 12 to No. 30 or No. 14 to No. 35 applied uniformly at the rate of at least 0.3-psf into the tamped and floated concrete surface while the concrete is plastic. The grit shall be buried about 0.7-diameter of each particle into the concrete.

The pedestrian railing along the outside of the stairway shall be paid for separately as pedestrian railing according to "Pedestrian Railing to Install" of these special provisions.

The concrete stairway will be measured by the square foot of horizontal surface. The vertical surface of the stairs is not included in the measurement for payment.

Payment shall be at the unit price bid per square foot and shall include full compensation for furnishing all labor, materials, tools, equipment and incidentals, including the abrasive nosing and nonskid treatment, and for doing all work involved in constructing Concrete Stairway as shown on the Plans, as specified in these Special Provisions and as directed by the Engineer.

ITEM NO. 32 - MINOR CONCRETE (VALLEY GUTTER) TO CONSTRUCT

This item shall be constructed in accordance with the Plans and shall conform to the applicable requirements of Sections 24 and 38 of the Standard Specifications.

Six inches (6") of Class 2 Aggregate Base shall be placed under the new gutter. The placement of Aggregate Base shall conform to the requirements of these Special Provisions. Aggregate Base quantities shall be included in the Class 2 Aggregate Base bid item.

Rebar for the valley gutter will be considered part of this bid item and no additional compensation for rebar will be allowed therefor.

Payment shall be at the unit price bid per linear foot and shall include full compensation for furnishing all labor, materials, tools, equipment and incidentals and for doing all work involved in valley gutter as shown on the Plans, as specified in these Special Provisions and as directed by the Engineer.

ITEM NO. 33 - CONCRETE ISLAND TO CONSTRUCT
ITEM NO. 34 - 4" PCC SIDEWALK TO CONSTRUCT
ITEM NO. 35 - 4" COLORED PCC SIDEWALK TO CONSTRUCT
ITEM NO. 36 - PCC PEDESTRIAN WALKWAY TO CONSTRUCT

Portland cement concrete (PCC) sidewalk, PCC colored sidewalk, concrete island and pedestrian walkway shall be constructed as shown on the Plans or as directed by the Engineer and shall conform to the applicable requirements of Sections 10, 24 and 38 of the Standard Specifications.

Sidewalk transitions to driveways shall be included in this bid item.

The sidewalk portion of the curb ramps shall be paid under this item of the proposal. The curb ramps shall be constructed where shown on the Plans or as directed by the Engineer.

At the locations where the pedestrian walkway is being colored the concrete shall be colored by adding the additive to the concrete at the rate indicated in the manufacturer's instructions.

The proposed sidewalk and curb ramp shall match the color and size of the existing sidewalk and walkway. The pedestrian walkway shall be the color shown on the plans. The Contractor may use Scofield Systems colors (www.scofield.com), Davis colors (www.daviscolors.com) or approved equal.

Prior to approval of sidewalk construction, the contractor shall submit to the Engineer two color samples of size not less than one-foot square for the equivalent color. For accurate color, the quantity of concrete mixed to produce the sample should not be less than 1 cubic yard and should always be in full cubic yard increments if the Contractor elects to mix a larger sample. Excess material shall be discarded according to local regulations. These mockups are to be constructed using processes and techniques intended for use on permanent work, including curing procedures. Up to three additional mockups per sample may be required until the colors are accepted by the Engineer.

Payment shall be at the unit price bid per square foot and shall include full compensation for furnishing all labor, materials, tools, equipment, incidentals and for doing all work involved in placing 4" PCC Sidewalk, 4" Colored PCC Sidewalk, and Concrete Island as shown on the Plans, as specified in these Special Provisions and as directed by the Engineer.

PCC Pedestrian Walkway will be measured by the square foot of the area of walkway as measured along the outside perimeter of the walkway commencing at the bottom of the wall on the left side, continuing along the vertical wall, across the pedestrian walkway, down the right side vertical wall face and finishing at the bottom of the wall.

Payment shall be at the unit price bid per square foot of the area of walkway as measured above and shall include full compensation for furnishing all labor, materials, tools, equipment, incidentals and for doing all work involved in placing PCC Pedestrian Walkway as shown on the Plans, as specified in these Special Provisions and as directed by the Engineer.

ITEM NO. 37 - TRUNCATED DOMES ON NEW RAMPS (36" X 48")

ITEM NO. 38 - TRUNCATED DOMES ON NEW RAMPS (36" X 60")

Cast in place truncated domes shall be installed as shown on the Plans or as directed by the Engineer and shall conform to the applicable requirements of Section 38 (DWG.T-78 and T-79) of the Standard Specifications.

Detectable Warning Tiles shall be Armor Tile, ADA Solutions or approved equal, as manufactured by Engineered Plastics Inc.: Product (#1) #ADA-C3648S-YW, Cast in Place, 36" x 48", Sound Amplifying, Color Federal Yellow, Product (#2) #ADA-S-3648-YW, Surface Applied, 36" x 48", Sound Amplifying, Color Federal Yellow or ADA Solutions Product (#1) # 3648IDPAV1Y, Cast in Place, 36" x 48", Sound Amplifying, Color Federal Yellow, Product (#2) # 3648IDRET1Y, Surface Applied, 36" x 48", Sound Amplifying, Color Federal Yellow. Detectable Warning Tiles shall have a five (5) year written warranty.

Installation of detectable warnings shall be by manufacturer trained and certified individuals. Detectable warning and installation shall have a five (5) year written warranty.

Payment shall be at the unit price bid per each and shall include full compensation for furnishing all labor, materials, tools, equipment, incidentals and for doing all work involved with installing cast in place truncated domes as shown on the Plans, as specified in these Special Provisions and as directed by the Engineer.

ITEM NO. 39 - CHAIN LINK FENCE TO INSTALL

Chain link fence shall be installed as shown on the Plans or as directed by the Engineer and shall conform to the applicable requirements of Sections 10 and 31 of the Standard Specifications.

Payment shall be at the unit price bid per lineal foot and shall include full compensation for furnishing all labor, materials, tools, equipment and incidentals, and for doing all work involved in installing chain link fence as shown on the Plans, as specified in these Special Provisions and as directed by the Engineer.

ITEM NO. 40 - RAILROAD TRACK TO INSTALL

Railroad tracks shall be placed and adjusted to grade as shown in the plans, in conformance with these Special Provisions and as directed by the Engineer

Material

RAIL

Rail shall be new or second-hand with a minimum of 40 pounds per yard. The rail shall consist of industrial grade steel and shall be straight and true and free of defects.

Segments of rail shall be provided by the City to the Contractor. The Contractor shall request the rails from the Engineer 5 working days prior to when they are needed. The Contractor will need

to pick up the rail from the City's corporation yard and shall cut the rail segments as necessary to the lengths needed to incorporate them into the pattern shown on the plans.

Rail Preparation

The rail shall be set on a well compacted aggregate base compacted to a 95% relative compaction. The Contractor shall prepare the base material per Section 14, "Earthwork, Excavation, Embankment and Sub-grade", of the Standard Specifications.

Full length of rail shall be used except in cutting the last segment furthest from the radial point of each spoke. The Contractor shall minimize the joints as much as possible. The rail segments shall be butt welded together and welding shall conform to Section 55, "Steel Structures" of the State Standard Specifications.

Concrete shall be poured around the rails as specified in various other items of work. At the conclusion of concrete pouring, the top of the rails are to be cleaned of concrete, mortar, or any other foreign materials to the satisfaction of the Engineer.

Payment for Railroad Tracks to Install shall be at the unit price bid per linear foot of track (track includes one rail) and shall include full compensation for furnishing all labor, materials, tools, equipment, incidentals and for doing all work as specified in these Special Provisions, as directed by the Engineer, and as shown on the plans.

ITEM NO. 41 - PEDESTRIAN RAILING TO INSTALL

GENERAL

Summary

Pedestrian Railing shall be fabricated and installed as shown on the plans and in conformance with these special provisions.

Submittals

The Contractor shall provide the Engineer with detailed shop drawings, from the manufacturer, of the pedestrian railing, showing sizes, details of fabrication and construction, bends and radii, handrail brackets, locations of hardware, anchors, accessories and installation details.

The Contractor shall provide the Engineer with the manufacturers' product data of railing system and railing components, handrails, accessories and include the corrosion-inhibitive shop coat painting system, including primer and finish coat.

MATERIALS

Metal for the handrails and posts shall be nominal size 1-1/2" diameter with 0.145" wall thickness standard steel pipe. Pipe for railings, pipe supports, pipe posts, and pipe sleeves shall be seamless steel pipe conforming to ASTM A53 Standard Weight, Schedule 40.

Steel plates for anchor plate shall be standard steel plate, conforming to ASTM A36 welding quality.

Welding requirements shall conform to Section 8-3, "Welding," of these special provisions.

The Contractor shall provide all required anchors, fasteners, miscellaneous components and accessories as required for complete and finished handrailing installations. Bolts and studs, nuts and washers shall conform with ASTM A307, A449, and A563, as applicable, and shall be galvanized in accordance with ASTM A153.

Grout shall conform to the provisions in Section 50-1.09, "Bonding and Grouting," of the Standard Specifications.

Galvanizing

Metal railings and related items shall be galvanized, after fabrication, by the hot-dip process in accordance with ASTM A123 and ASTM A385. Weight of zinc coating shall conform with requirements specified under "Weight of Coating" in ASTM A123. Safeguarding against steel embrittlement shall conform with applicable requirements of ASTM A143. Safeguarding against warpage and distortion of steel members shall conform with applicable requirements of ASTM A384. Shop galvanized metalwork necessitating field welding which in any manner removes original galvanizing shall be restored by galvanizing repair in accordance with ASTM A780. Bolts and screws for attachment of galvanized items shall be galvanized in accordance with ASTM A153, or of compatible, noncorrodable material.

FABRICATION

Metal handrails and posts shall be fabricated by firms or shops experienced and skilled in the custom fabrication of metal handrails and posts. Bends in rails shall be precision-formed to a smooth continuous radius by skilled workers. Work quality and finish shall be true to detail. Butt joints shall have internal pipe sleeve or dowel. Ends shall be closed with similar materials, welded and ground smooth.

Steel welded connections shall conform to Section 8-3, "Welding," of these special provisions. Welding shall be performed in the shop unless otherwise approved by the Engineer. Welded joints of handrails and posts shall be ground and dressed smooth to match adjacent surfaces and so that the shape and profile of the item welded is maintained. Metal handrails and posts shall be prefabricated and preassembled in the factory or shop as far as practical. Metal handrail and post prefabrication and preassembly at locations other than the pre-designated factory or shop must be approved by the Engineer.

Painting and Cleaning

Metal handrails and posts shall be cleaned and painted in conformance with Section 59, "Painting," of the Standard Specifications.

All surfaces of handrails and posts shall be cleaned and treated to assure maximum paint adherence, prior to application of the shop prime coat as applicable for the type of substrate, exposure, and application.

All ferrous metalwork shall be given a shop coat of rust-inhibitive metal primer.

All surfaces of handrails and posts shall be shop spray-painted.

The finish coat color shall match Federal Standard 595B, No. 24491 Ranch Green, or an approved equal.

Prior to installation of any stairway handrail unit by the Contractor, the unit shall be inspected by the Engineer for written approval. The Engineer shall inspect the unit for compliance with the staircase handrail shop drawings and other product data submitted by the Contractor, workmanship, and the overall quality of the each fabricated staircase handrail unit.

In the event that the Engineer does not approve a fabricated staircase handrail unit, the Contractor shall re-fabricate the staircase handrail unit as directed by the Engineer.

No additional compensation will be allowed for any staircase handrail units that require re-fabrication as directed by the Engineer.

INSTALLATION

Install metal handrails and posts as indicated and in accordance with the approved shop drawings, as shown on the plans, in conformance with these special provisions, as directed by the Engineer, using workers skilled and experienced in the installation of the type of work involved.

Install metal handrails and posts with accessories furnished by the railing fabricator as required for complete and finished railing installations.

Field welding, where required, shall conform to Section 8-3, "Welding," of these special provisions.

Galvanizing Repair

Galvanized surfaces which have become damaged from welding, handling, or installation shall be repaired immediately after installation with galvanizing repair material in accordance with ASTM A780.

Field Painting

After installation, exposed painted surfaces, field welds, and other abraded or damaged primed surfaces shall be prepared as required and touched up with an additional coat of the same primers for ferrous and galvanized surfaces as hereinbefore specified for shop painting.

Lightly sand and feather out such damaged surfaces so that paint touch-up becomes invisible. Spray-paint all touch-up work.

Measurement and Payment

The quantity of pedestrian railing to be paid for will be determined by the feet from the actual measurement of the completed railing, the measurement to be made parallel to the ground slope along the top line of the completed railing.

Payment shall be at the unit price bid per lineal foot of pedestrian railing and shall include full compensation for furnishing all labor, materials, tools, equipment, and incidentals, and for doing all work involved in constructing the pedestrian railing, complete in place, including, but not limited to, disposal of surplus material, concrete and reinforcing steel as shown on the plans, as specified in the Standard Specifications and these special provisions, and as directed by the Engineer.

ITEM NO. 42 - PICKET FENCE TO INSTALL

Picket fence shall be furnished and installed at the locations shown in the Plans and as directed by the Engineer, and shall be in conformance with these Special Provisions.

Installation of picket fence shall be per manufacturer's recommendation and the instructions shown on the plans with the approval of the Engineer.

Contractor shall submit to Engineer, for approval, the manufacturer's specification of the picket fence. Picket fences shall not be placed on the project prior to approval by the Engineers of the manufacturer's specifications submitted by the Contractor.

Payment shall be at the unit price bid per lineal foot of picket fence and shall include full compensation for furnishing all labor, materials, tools, equipment, incidentals and for doing all work involved in constructing picket fence as shown on the Plans, as specified in these Special Provisions and as directed by the Engineer.

ITEM NO. 43 - PEDESTRIAN BARRICADE TO INSTALL

Pedestrian Barricade shall be furnished and installed at the locations shown in the Plans and as directed by the Engineer, and shall be in conformance with these Special Provisions.

Installation of pedestrian barricades shall be per manufacturer's recommendation with the approval of the Engineer.

Contractor shall submit to Engineer, for approval, the manufacturer's specification of the pedestrian barricade. Pedestrian barricades shall not be placed on the project prior to approval by the Engineers of the manufacturer's specifications submitted by the Contractor.

Payment shall be at the unit price bid per each and shall include full compensation for furnishing all labor, materials, tools, equipment, incidentals and for doing all work involved in placing pedestrian barricades as shown on the Plans, as specified in these Special Provisions and as directed by the Engineer.

ITEM NO. 44 - BOLLARDS TO INSTALL

Bollards shall be furnished and installed at the locations shown in the Plans and as directed by the Engineer, and shall be in conformance with Section 38 of the Standard Specifications and these Special Provisions.

Installation of bollards shall be per manufacturer's recommendation with the approval of the Engineer.

Contractor shall submit to Engineer, for approval, the manufacturer's specification of the bollard. Bollards shall not be placed on the project prior to approval by the Engineers of the manufacturer's specifications submitted by the Contractor.

Payment shall be at the unit price bid per each and shall include full compensation for furnishing all labor, materials, tools, equipment, incidentals and for doing all work involved in placing bollards as shown on the Plans, as specified in these Special Provisions and as directed by the Engineer.

ITEM NO. 45 - GUTTER DRAIN NO. 20 TO CONSTRUCT

ITEM NO. 46 - GUTTER DRAIN NO. 20 (MODIFIED) TO CONSTRUCT

Gutter Drains shall conform to Sections 20, 24 and 38 (DWG. S-45) of the Standard Specifications.

Gutter Drains shall be cast in place, formed using wood or metal forms. Hand forming of concrete will not be allowed.

The grate shall conform for Section 38 of the Standard Specifications. The grate shall be installed so that either end of the grate can be lifted from the frame and removed by pulling parallel to the curb. The grate frame shall be installed between ½ and 1 inch from the face of the open back hood. All joints and all connections between the hardware (i.e. frame and grate) and the vertical walls of the drain inlet shall be grouted forming a smooth transition with a light broom finish.

Drain lead shall be connected to drain inlet with approved waterstop cast into side wall with non-shrink grout. Waterstop shall have a minimum of 2-inches of embedment on all sides. Pipe end shall be flush with the inside surface of the box.

Curb and gutter reconstruction shall match existing geometry and, at the Engineers discretion, extend up to 5 feet in length on either side of the inlet. The cost of curb and gutter reconstruction shall be included in the unit price for this item. Surface restoration shall be in accordance with the appropriate section of these Special Provisions. Pavement cutting shall be perpendicular and parallel to the centerline of the road. Surface restoration due to drain inlet removal and installation shall be paid for as part of this item. Gutter depressions, as shown on the plans, shall be fully compensated into the unit price paid per drainage inlet and no additional compensation will be allowed.

Payment shall be at the unit price bid per each and shall include full compensation for furnishing all materials, labor, tools, equipment, and incidentals and for doing all work necessary to construct Gutter Drain No. 20 and Gutter Drain No. 20 (Modified), as shown on the Plans, as specified in these Special Provisions and as directed by the Engineer.

ITEM NO. 47 - 3 INCH PVC STORM DRAIN PIPE TO INSTALL
ITEM NO. 48 - 12 INCH STORM DRAIN PIPE TO INSTALL

3 inch PVC and 12 inch storm drain pipes shall conform to Sections 10 and 26 of the City Standard Specifications, these Special Provisions, and as directed by the Engineer.

Prior to the start of work, Contractor shall submit a plan showing types of pipe and locations to the Engineer, as specified in Section 26 of the City Standard Specifications. Any deviation in the plan thereafter shall not be allowed unless approved in advance by the Engineer.

This item shall include all necessary trenching, bedding, backfilling, and pavement restoration involved in the installation of the storm drain pipe.

When connecting to a manhole:

A) If a precast manhole base is allowed, the Contractor shall install a flexible joint (bell and spigot or flexible coupling) a horizontal distance of 18-inches to 24-inches from the wall of the manhole.

B) All connections to the manholes not cast as part of the base shall be made by use of a coring machine and a "Cor-N-Seal" or approved equal flexible watertight coupling. The incoming pipe shall be cut, and the space between the inserted pipe and the seal shall be grouted smooth.

The lead invert elevations shown on the Plans are approximate only. It shall be the Contractor's responsibility to determine the final vertical alignment by means of locating potential conflicts prior to construction of the drain inlet, lead, or coring of the manhole. No deflections will be allowed in the lead unless otherwise approved by the Engineer. The drain lead shall have a minimum slope of 0.0025 ft. /ft. unless otherwise approved by the Engineer. Unless otherwise stated herein, no additional compensation shall be paid to the Contractor for potholing, or altering drain inlet or lead elevations.

Included in this item is the construction of concrete collars connecting leads into other drainage structures.

Payment shall be at the unit price bid per linear foot of proposed storm drain pipe to install and shall include full compensation for furnishing all labor, materials, tools, surface restoration, equipment and incidentals and for doing all work involved in installing 3 inch PVC and 12 inch storm drain pipe as shown on the Plans, as specified in these Special Provisions and as directed by the Engineer.

ITEM NO. 49 - SLURRY SEAL TYPE II TO PLACE

This item shall consist of furnishing and placing a slurry seal coat to the asphalt surfaces as shown on the plans, and in accordance with Section 23 of the Standard Specifications.

The slurry seal shall consist of a mixture of a polymer modified asphalt emulsion, mineral aggregate, mineral filler, water and specified additives. The materials shall be proportioned, mixed and uniformly spread over a properly prepared surface as directed by the Engineer. The slurry seal shall conform to the requirements of Section 23 of the Standard Specifications except where specified otherwise in these provisions. The completed slurry seal shall leave a homogeneous mat, adhere firmly to the prepared surface, and have a friction resistant surface texture throughout its service life.

Slurry Seal Materials:

Asphalt Emulsion:

The emulsified asphalt shall be designated as grade PMCQS-lh.

The polymer within the asphalt emulsion shall be, at the option of the Contractor, either Neoprene, SBR, EVA or SBS. Solid polymers such as EVA or SBS shall be adequately blended into the asphalt prior to emulsification. If a liquid latex such as Neoprene, SBR or similar is used, the latex shall be "co-milled" into the emulsion through the water phase during manufacturing. Each load of polymer asphaltic emulsion shall have a certificate from the asphalt emulsion manufacturer guaranteeing that either asphalt blending or "co-milling" processes were used. The certificate shall also state the percentage of the solid rubber polymer added by weight of the asphalt as well as the composition of the polymer. The addition of latex to the emulsion after emulsion manufacturing is prohibited.

The polymer modified asphalt emulsion shall conform to the following specifications:

TEST	TEST METHOD	REQUIREMENT	
Tests on emulsion:		Min.	Max.
Viscosity SSF, @ 770F, seconds	AASHTO T 59	15	90
Settlement, 5 days, %	AASHTO T 59	--	5
Storage Stability Test, 1 day, %	AASHTO T 59	--	1.0
Distillation: Oil distillate by volume of emulsion, %	AASHTO T 59	--	3

Residue by Low-Temperature Vacuum Distillation, %	ASTM D244. 133-137	57	--
Tests on residue using CTM 331			
Penetration, 770F, 100 grams for 5 seconds, dmm	AASHTO T 59	40	65
Solubility in Trichloroethylene, %	ASTM D 2042	97.5	--
Ductility, 770F, 5cm/mm, cm (RTFO Aged Residue)	AASHTO T 51	60	--
Ring & Ball Softening Point, 0F	AASHTO T 53	123	--
Polymer Content, %	CTM 401	3.0%	--
Solid polymer content based on weight of asphalt.			
AND			
Torsional Recovery, %	CTM 332	18	--

Mineral Aggregate:

Slurry seal aggregate for all roads shall conform to ISSA Type II aggregate and shall be manufactured crushed stone such as granite, slag, limestone, chat, or other high quality aggregate, or combination thereof. To assure the material is totally crushed, 100% of the parent aggregate shall be larger than the largest stone in the gradation to be used.

When tested in accordance to AASHTO T27 (ASTM C136) and AASHTO T11 (ASTM C117), the aggregate gradation (including the mineral filler) shall be within following bands.

Type II Slurry Seal

Sieve Sizes	Passing Percentage	Stockpile Tolerance
9.5 mm (3/8")	100	+/- 5%
4 .75 mm (#4)	94-100	+/- 5%
2.36 mm (#8)	65-90	+/- 5%
1.18mm (#16)	40-70	+/- 5%
600 um (#30)	25-50	+/- 5%
330 um (#50)	18-30	+/- 4%
150um (#100)	10-21	+/- 3%
75 um (#200)	5-15	+/- 2%

After the target gradation has been submitted and identified in the mix design, the percent passing each sieve shall not vary by more than the stockpile tolerance and still remain within the gradation band during the application of slurry seal.

The mineral aggregate shall also conform to the following:

Test	Test Method	Requirements
Sand Equivalent	ASTM D 2419	60 Minimum
Loss in L.A. Rattler (100 Revolutions)	CTM 211	10%Maximum
Loss in L.A. Rattler (500 Revolutions)	CTM 211	35%Maximum
Durability Index	ASTM D 3744	60 Minimum

Mineral Filler- Mineral Filler shall be either Portland Cement, hydrated lime, limestone dust, fly ash or other approved filler meeting the requirements of ASTM D242 shall be used as required by the mix design. The mineral filler shall be considered as part of the aggregate in calculations regarding slurry seal asphalt content.

Water - The water added to the slurry seal shall be potable and free of harmful salts and contaminates.

Additives - Additives may be used to accelerate or retard the mixing and setting characteristics of the slurry seal, or to improve the resulting finished surface. The use of additives in the slurry mix (or individual materials) shall be made initially in quantities predetermined by the mix design with field adjustments if required. If the use of additive during application requires a greater than + or -1.0% deviation from the recommendations of the mix design, a new mix design will be performed to verify system performance at higher or lower additive levels.

Water, and additives, if used, shall be added to ensure proper workability and:

1. Permit the unrestricted flow of traffic on the slurry seal no more than one (1) hour after placement without the occurrence of bleeding, raveling, separation, or other distress.

2. Prevent the development of bleeding, raveling, separation, or other distress within fifteen (15) days after placing the slurry seal.

Mix Design and Pre-qualification of Materials:

During the pre-construction meeting the Contractor shall submit a certified mix design covering the specific materials to be used on the project. Compatibility of the aggregate, emulsion,

mineral filler, and other additives shall be verified by the mix design. The mix design shall be made with the same aggregate gradation that the contractor shall provide on the project.

The mix design shall be performed and dated within 30 days prior to the application of slurry seal. A laboratory capable of performing all the tests listed below shall perform the mix design testing and certification. The laboratory shall certify on the mix design that it has had at least two years of experience in the design of slurry seal.

After the mix design has been approved, no substitution or changes of materials shall be permitted, unless approved by the Engineer. If changes in materials are approved by the Engineer, a new mix design shall be performed by the Testing Laboratory before the application of new materials.

Required tests and values are as follows:

TEST	DESCRIPTION	SPECIFICATION
ISSA TB-113	Mix Time	Controllable to 180 sec minimum
ISSA TB-139	Wet Cohesion 30 minutes min 60 minutes min	 12kg-cm minimum 20kg-cm minimum
ISSA TB-109	Excess Asphalt by LWT Sand Adhesion	50g/ft2 maximum (538g/m2 maximum)
ISSA TB-114	Wet Stripping	Pass (90% minimum)
ISSA TB-100	Wet Track Abrasion Loss One hour soak	50g/ft2maximum (807g/m2 maximum)

The Wet Track Abrasion test is used to determine the minimum asphalt content.

The laboratory shall also report the quantitative effects of moisture content on the unit weight of the aggregate (bulking effect). The report must clearly show the proportions of aggregate, mineral filler (min. and max.), water (min. and max.), additive(s) (usage), and asphalt emulsion based on the dry weight of the aggregate.

The percentages of each individual material required shall be shown in the laboratory report. Adjustments may be required during the construction, based on the field conditions. The Engineer shall give final approval for all such adjustments.

The Engineer shall approve the mix design and all slurry seal materials and methods prior to use. The component materials shall be within the following limits:

RESIDUAL ASPHALT	7.5% - 13.5% (approx. 12.0 - 22.0% emulsion) based on dry weight of aggregate
MINERAL FILLER	0.0% - 2.0% Based on dry weight of aggregate.
ADDITIVES	As needed to control mixing and setting times
WATER	As needed to achieve proper mix consistency.

Pre-qualification of Materials:

The Contractor shall submit to the Engineer samples of the slurry seal materials during the pre-construction meeting. The samples shall be accompanied by a report from the Testing Laboratory. The report shall identify source and type of each material as well as testing results showing compliance with related materials specifications contained in these Special provisions.

The Contractor shall submit samples from all suppliers furnishing a minimum of the following materials along with the corresponding MSDS sheets. Each sample shall be clearly labeled as to its contents and the words "Slurry Seal."

1) One gallon of the base asphalt
2) One pint of the polymer additive (with clear labeling of polymer type)
3) One quart of asphalt emulsion
4) 50 pounds of slurry seal aggregate

Changes in source or type of materials submitted to the Engineer as Pre-qualification samples shall not be permitted during the entire project without the approval of the Engineer.

Mechanical Proportioning:

Mixer-spreader trucks shall be equipped to proportion emulsion, water, aggregate, and set-control additives by volume. The aggregate shall be proportioned using a belt feeder operated with an adjustable cutoff gate. The height of the gate opening shall be readily determinable. A positive displacement pump shall proportion the emulsion. Water shall be introduced into the mixer by a meter registering gallons delivered.

The aggregate belt feeder shall deliver aggregate to the pugmill with such volumetric consistency that the deviation for any individual aggregate delivery rate check-run shall not exceed 2.0 percent of the mathematical average of 3 runs of at least 3 tons in duration each.

The emulsion pump shall deliver emulsion to the pugmill with such volumetric consistency that the deviation for any individual delivery rate check-run shall not exceed 2.0 percent of the mathematical average of 3 runs of at least 500 gallons in duration each.

The aggregate belt feeder shall be connected directly to the drive on the emulsion pump. The drive shaft of the aggregate feeder shall be equipped with a revolution counter reading to the nearest full revolution of the aggregate delivery belt.

A temperature-indicating device shall be installed in the emulsion storage tank at the pump suction level, if requested by the Engineer. The device shall indicate temperature of the emulsion and shall be accurate to ten degrees Fahrenheit (100F).

Machine Calibration and Verification:

Mixer-spreader trucks to be used in performance of the work shall be calibrated in the presence of the Engineer prior to construction. The Contractor shall document the way in which the mechanical proportioning devices are calibrated and correlated to the metered delivery of each material at various settings. No mixer-spreader truck will be allowed to work on the project until the calibration has been completed and accepted by the Engineer within at least one (1) working day prior to start of work.

Spreading Equipment:

The slurry mixture shall be uniformly spread by means of a controlled spreader box conforming to the following requirements:

1. All spreader boxes over 7-1/2 feet in length shall have baffles.

2. Spreader box, rubber strike off, and drag mops shall be maintained in such manner as to prevent chatter (washboarding) in the finished mat. If washboarding occurs, that area shall be corrected to eliminate the washboard.

3. The rear flexible strike-off blade shall make close contact with the pavement and shall be capable of being adjusted to the various crown slopes so as to apply a uniform seal coat. Blades shall be changed as frequently as necessary to prevent longitudinal scouring.

4. The maximum speed of the application equipment shall not be greater than 180 feet per minute.

5. At least two (2) operational spreader trucks shall be available at the job site during the spreading operation except when continuous placement type mixer-spreader trucks are used.

Preparation of Surface:

Immediately prior to applying the slurry, the Contractor shall sweep and clean the pavement surface and lip of gutter joints of all loose material, silt spots, vegetation, and any other matter which may adversely affect the adherence of the slurry to the existing pavement. If the pavement is particularly dirty, the Engineer may at no additional cost require the Contractor to flush the surface with water.

The Contractor shall remove thermoplastic stripes/markings, preformed traffic stripes/markings and raised pavement markers prior to slurry seal operation. The cost of removal of all raised pavement markers, all thermoplastic and preformed pavement stripes/markings shall be included in other items of work.

The Contractor shall be responsible for locating, covering, removing, cleaning and protecting all utility covers, maintenance hole covers, water valve boxes, and any other utility covers. The methods of protection, referencing, locating, and cleaning shall be subject to approval by the Engineer prior to any resurfacing.

All protective coverings shall be removed from maintenance hole covers, water valve boxes, and other utility covers each day before opening the pavement to traffic. If the Contractor fails to protect utility covers or fails to remove all protective coverings within 3 working days of notification, the Contractor shall pay an administrative penalty of TWO HUNDRED AND FIFTY DOLLARS ($250) per calendar day for each utility cover.

Placing:

The slurry seal shall be placed at a rate of approximately twelve (12) to fifteen (15) pounds per square yard. The exact rate will be as determined by specific weight of aggregate, the surface demand of the pavement, and the size of the largest particle size of the aggregate.

The slurry seal shall not be placed when the existing pavement or air temperature is below 55 degrees Fahrenheit (15 degrees C) and falling, or during unsuitable weather, but may be applied when both pavement and air temperature are above 45 degrees Fahrenheit (7 degrees C) and rising.

All through driving lanes shall be spread in full lane width pulls only. Slurry sealing of driveway aprons, returns, and other incidental work shall be accomplished concurrently with application of the street. **The joint between the pavement and the PCC gutter shall be sealed with slurry seal and overlap the lip of the gutter a minimum of 3/4 inches and a maximum of 2 inches.** When slurry starts or finishes, a straight-line cut-off shall be obtained by laying down a strip of building paper or other approved material. The Contractor shall remove such paper and any excess slurry after application of the slurry. Edge limits of the slurry on both sides of the street shall be maintained in a neat and uniform line.

At curb ramp locations, there shall be no lip and there should be a smooth transition.

When feasible, all joints and curb lines shall be pulled by machine to keep handwork to a minimum. Ridges or bumps in the finish surface will not be permitted.

Building paper shall be placed at transverse joints and over previously placed slurry seals to avoid the double placement of slurry seal. Other methods to avoid double placement may be used if first approved by the Engineer.

The Contractor shall remove all excess material, which is placed outside asphalt pavement areas. Hand tools shall be available in order to remove spillage.

Where the completed slurry is not uniform in color, the street shall be treated to eliminate the color variation at the Contractor's expense. The method of treatment will be subject to approval by the Engineer.

The Contractor shall repair and reseal all areas of the streets, which have not been sealed properly or completely at no additional cost to the City.

The Contractor shall be responsible for sweeping the streets and sidewalks which excessive raveling may occur after placing of the slurry seal, at no additional cost to the City, as directed by the Engineer.

Measurement and Payment:

Measurement for payment shall be taken from edge of pavement to edge of pavement, or from lip of the gutter to lip of gutter.

Payment shall be at the unit price bid by square yard and shall include full compensation for furnishing all labor, material, tools, equipment, and incidentals to perform all work involved in placing Type II Slurry Seal as shown on the plans, as specified in these Special Provisions and as directed by the Engineer.

ITEM NO. 50 - COLD PLANE ASPHALT CONCRETE (0.17" MAX)

GENERAL

This work includes cold planning existing asphalt concrete pavement and conform grinding, in accordance with Sections 22-5 and 38 of the City Standard Specifications, Section 19 "Roadway Excavation" of the State Standard Specifications, these Special Provisions, and as directed by the Engineer.

Sequencing and Scheduling

Schedule cold planing and conform grinding activities so that not more than 7 calendar days elapses between the time the pavement is cold planed and the HMA is placed.

MATERIALS

HMA for temporary tapers must be of the same quality as the HMA used elsewhere on the project or comply with "Hot Mix Asphalt" of these special provisions.

CONSTRUCTION

General

Perform planing of asphalt concrete pavement without the use of a heating device to soften the pavement. Planing asphalt concrete pavement shall be performed by the cold planing method. Planing of the asphalt concrete pavement shall not be done by the heater planing method.

Cold Planing Equipment

Cold planing machine must be:

1. Equipped with a cutter head width that matches the planing width. If the only available cutter head width is wider than the cold plane area shown, submit to the Engineer a request for using a wider cutter head. Do not cold plane until the Engineer approves your request.
2. Equipped with automatic controls to control the longitudinal grade and transverse slope of the cutter head and:

    2.1. If a ski device is used, it must be at least 30 feet long, rigid, and 1 piece unit. The entire length must be used in activating the sensor.

    2.2. If referencing from existing pavement, the cold planing machine must be controlled by a self-contained grade reference system. The system must be used at or near the centerline of the roadway. On the adjacent pass with the cold planing machine, a joint matching shoe may be used.

3. Equipped to effectively control dust generated by the planing operation.
4. Operated so that no fumes or smoke is produced.

Replace broken, missing, or worn machine teeth.

Cold planing machines shall be equipped with a cutter head not less than 30 inches in width and shall be operated so as not to produce fumes or smoke. The cold planing machine shall be capable of planing the pavement without requiring the use of a heating device to soften the pavement during or prior to the planing operation.

Grade Control and Surface Smoothness

Furnish, install, and maintain grade and transverse slope references.
The depth, length, width, and shape of the cut must be as shown or as ordered. The final cut must result in a neat, vertical and uniform surface. Do not damage remaining surface. The depth of cold planning of the existing asphalt concrete pavement shall be a maximum 2 inches measured from the lip of gutter.

The completed surface of the planed asphalt concrete pavement must not vary more than 0.02 foot when measured with a 12-foot straightedge parallel with the centerline. The transverse slope of the planed surface must not vary more than 0.03 foot from the straightedge when placed at right angles to the centerline.

Planed widths of pavement shall be continuous except for intersections at cross streets where the planning shall be carried around the curb returns and through the conform lines, or as shown on the construction plans. Following planning operations, a drop-off of more than 0.17 foot is not allowed between adjacent lanes open to public traffic.

Temporary HMA Tapers

If a drop-off between the existing pavement and the planed area at transverse joints cannot be avoided before opening to traffic, construct a temporary HMA taper. HMA for temporary taper must be:

1. Placed to the level of the existing pavement and tapered on a slope of 30:1 (Horizontal: Vertical) or flatter to the level of the planed area
2. Compacted by any method that will produce a smooth riding surface
3. Completely removed before placing the permanent surfacing. The removed material must be disposed of outside the highway right of way in conformance with the provisions in Section 7-1.13, "Disposal of Material Outside the Highway Right of Way," of the Standard Specifications.

Disposal of Planed Material

Remove cold planed material concurrent with planing activities, within 50 feet of the planer or as ordered.

Dispose of planed material and under Section 7-1.13, "Disposal of Material Outside the Highway Right of Way," of the Standard Specifications.

MEASUREMENT AND PAYMENT

Cold plane asphalt concrete pavement will be measured by the square yard. The quantity to be paid for will be the actual area of surface cold planed to depth shown on the plans irrespective of the number of passes required to obtain the depth and shall include the removal of any existing quarter crowns.

Payment shall be at the unit price bid per square yard and shall include full compensation for the cold planning asphalt concrete pavement and disposal as shown on the plans, as specified in these Special Provisions and as directed by the Engineer.

ITEM NO. 51 - HOT MIX ASPHALT (3/4") PAVEMENT TO PLACE

ITEM NO. 52 - HOT MIX ASPHALT (1/2") PAVEMENT TO PLACE

Hot Mix Asphalt shall be Type A, 3/4" maximum aggregate (coarse) and 1/2" maximum aggregate (medium) and shall be placed as shown on the Plans, as specified in these Special Provisions and in conformance with the requirements of Sections 10 and 22 of the Standard Specifications.

Payment shall be at the unit price bid per ton based on the weight tickets and shall include full compensation for furnishing all labor, materials, tools, equipment, incidentals and for doing all work involved in placing hot mix asphalt concrete pavement as shown on the Plans, as specified in these Special Provisions and as directed by the Engineer.

ITEM NO. 53 - ROADSIDE SIGN TO REMOVE

Existing roadside signs, at those locations shown on the plans to be removed, shall be removed and disposed of in accordance with the Section 13-3 of the City Standard Specifications, Section

15 "Existing Highway Facilities" of the State Standard Specifications, these Special Provisions, and as directed by the Engineer. Removed sign panels shall be salvaged and delivered to the City of Sacramento Traffic Sign and Markings Section at 5730 24th Street, Building 10, Sacramento, CA. Existing roadside signs shall not be removed until replacement signs have been installed or until the existing signs are no longer required for the direction of public traffic, unless otherwise directed by the Engineer.

Payment shall be at the unit price bid per each and shall include full compensation for furnishing all labor, material, tools, equipment and incidentals, and for doing all work involved with removing roadside signs as shown on the Plans, as specified in these Special Provisions and as directed by the Engineer.

ITEM NO. 54 - ROADSIDE SIGN TO RELOCATE

Existing roadside signs shall be removed and relocated to the new locations as shown on the Plans and as directed by the Engineer and shall have all material (soil, concrete, etc.) removed from the base, in accordance with Section 32 of the City Standard Specifications, Section 56 "Signs" of the State Standard Specifications, these Special Provisions, and as directed by the Engineer.

Each roadside sign shall be installed at the new location on the same day that the sign is removed from its original location. The Contractor shall replace damaged or otherwise unusable posts, as directed by the Engineer, with new posts of like material. Relocated signs shall be mounted as described in these Special Provisions. Signs shall have a minimum 7' vertical clearance from the proposed grade.

Payment shall be at the unit price bid per each and shall include full compensation for furnishing all labor, material, tools, equipment and incidentals, and for doing all work involved in relocating the roadside signs as shown on the Plans, as specified in these Special Provisions and as directed by the Engineer.

ITEM NO. 55 - ROADSIDE SIGN TO PLACE

Roadside signs shall be installed at the locations shown on the plans or where designated by the Engineer and in conformance with the provisions in Section 56-2, "Roadside Signs," of the State Standard Specifications and these special provisions.

Signage

The Contractor shall notify the Engineer two (2) working days prior to the placement of the signs. The Contractor shall review the proposed sign location with the Engineer and a supervisor from the City's Traffic Signs and Markings Section prior to installation of the sign. The Engineer may make adjustments to the proposed sign location in the field.

Street Signs

Sign posts shall be on two-inch galvanized Schedule #40 steel posts conforming to Section 10-38 (2, 5 and 10) of the City's Standard Specifications. All posts shall have a Minimum Resisting Moment of 400 foot-pounds. All posts shall be capped. Post caps may be aluminum or galvanized steel. Bolts and miscellaneous metal hardware shall be galvanized or plated after fabrication in conformance with Section 75-1.05 "galvanizing" of the State of California, Department of Transportation Standard Specifications.

Signs located at the side of the roadway shall have a minimum height of seven feet (7') from the adjacent ground to the bottom of the sign, unless specified otherwise. The height of a combination of signs, such as an R7 with an R10, shall be 18 inches from the top of the island to the bottom of the lowest sign (R10) with a maximum one inch separation between the two signs. Signs shall be mounted as follows:

Sign Posts

A 5/16 inch diameter cap screw with a plated rubber backwasher against the face of the sign and elastic stop nuts shall be placed through the sign and post at both top and bottom of each sign. A "V" notched piped saddle, to support the sign, shall be placed between the sign and the post.

Signal and Street Light Poles

Place a 3/4 inch stainless steel banded strap and appropriate hardware both top and bottom of each sign.

Sign panels shall be not less than 0.080 inches thick aluminum panels. All sheeting for traffic signs shall be Type IX sheeting in accordance with ASTM Specification for Retroreflective Sheeting. Copy of the specification is available from the City. Signs shall meet the standards set forth in the California Department of Transportation Traffic Manual. A 3-inch by 11/2-inch "City of Sacramento" logo box with 1/2-inch white, red or black letters shall be centered and printed on the lower border of each sign blank prior to application of the reflective sheeting. As an alternative, the "City of Sacramento" logo with 1/2" letters may be placed in the border area.

Each sign shall have the date of manufacture and a location number stenciled on the back side. Location information shall consist of each sign having an individual number which will be recorded on a clean set of Plans during the sign installation. This procedure will be in accordance with the "Record Drawings" section of these Special Provisions.

The Contractor shall use the sign sizes as shown in the State of California, Department of Transportation Traffic Manual, unless specified otherwise on the drawings.

Payment shall be at the unit price bid per each and shall include full compensation for furnishing all labor, material, tools, equipment and incidentals, and for doing all work involved in placing the roadside sign as shown on the Plans, as specified in these Special Provisions and as directed by the Engineer.

ITEM NO. 56 - THERMOPLASTIC TRAFFIC STRIPE TO PLACE

ITEM NO. 57 - THERMOPLASTIC PAVEMENT MARKING TO PLACE

Thermoplastic traffic stripes and markings shall be placed as shown on the Plans in conformance with Section 32-2 of the City Standard Specifications, Sections 84-1 and 84-2 of the State Standard Specifications, these Special Provisions, and as directed by the Engineer. All pavement markings shall be in conformance with the State Standard Plans (latest edition).

Contractor shall remove existing striping and markings as shown on the plans or as required to place new striping and to complete the final striping plan complete in place.

Material

Thermoplastic shall be Alkyd type for extrusion application and shall produce an adherent reflectorized strip capable of resisting deformation by traffic.

The thermoplastic material shall be 100 percent solids. The binder shall consist of synthetic alkyd resins and shall be homogeneously incorporated with all the necessary prime pigments, fillers, and glass beads to produce a traffic coating to meet the requirements as specified herein.

Characteristics of Finished Thermoplastic:

	White	Yellow
Glass Beads, AASHTO M-247, Type I, percent by weight, min. (Cal. Test Method 423)	30	30
Titanium Dioxide (TiO2), percent by weight, min. (AASHTO T250-77)	10	
Lead Chromate, Medium Heat Stability, percent by weight, min.		2.5
Specific Gravity, max. (Cal. Test Method 423)	2.15	2.15
Binder, percent by weight, min. (Cal. Test Method 423)	18	18
Ring & Ball Softening Point, °F (ASTM E28)	200 – 240	200 – 240
Tests on Material after 4 hours heat with stirring at 425° + 2°F, which includes 1 hour for meltdown and temperature stabilization:		

Bond Strength to Concrete, 0.125-inch thick film drawdown at 425°F test at 75°F + 2°F, psi, min (Cal. Test Method 423)	180	180
Brookfield Thermosel Viscosity, Spindle SC4-27, 20 RPM at 425°F, Poise (Cal. Test Method 423)	30 – 45	30 – 45
Impact Resistance, Falling Ball Method, 0.125-inch thick film drawdown at 425°F on concrete. Test at 75°F + 2°F inch-lbs., (ASTM D2794)	10	10
Daylight Luminous Reflectance, min. (ASTM E97)	75	40
Yellowness Index, max., (ASTM E313)	.15	
Hardness, Shore A-2 Durometer with 2 kilogram weight at 115°F (Cal. Test 423)	60 – 80	60 – 80
Low Temperature Stress Cracking, Resistance at 25°F (AASHTO)	No Crack	No Crack
Color Match, Federal Std. No. 595a, Color No. 33538		Passes

Application

The thermoplastic material shall be applied by extrusion methods in a single uniform layer.

Stencils shall be used when applying thermoplastic material for pavement markings. Stencils may be new or used, if in good condition. If stencils are bent or damaged, they shall be replaced at the request of the Engineer.

The pavement surface to which thermoplastic material is applied shall be completely coated by the material and the voids of the pavement surface shall be filled.

Unless otherwise specified in the Special Provisions, the thermoplastic material for traffic stripes shall be applied at a minimum thickness of 0.075-inch. Thermoplastic Material for pavement markings shall be applied at a minimum thickness of 0.125-inch. Glass beads shall be applied immediately to the surface of the molten thermoplastic material, at a rate of not less than 8 lbs. per 100 sq. ft. The amount of glass beads applied shall be measured by stabbing the glass beads tank with a calibrated rod.

The Contractor shall apply all traffic stripes and markings on new asphalt or PCC surface in accordance with the manufacturer's recommendations and these Special Provisions.

Tolerances and Appearance

The completed traffic stripes and markings shall have clean and well-defined edges without deformations, and shall be free of tears or other disfigurements. Improperly placed, defective or disfigured traffic stripes and markings shall be immediately removed from the pavement surface by methods approved by the Engineer. All such removal work shall be at the Contractor's expense.

Completed traffic stripes shall be uniform, shall be straight on tangent alignment, and shall be on a true arc on curved alignment. On tangent alignment, when a 100' string line is stretched taught and placed directly on the outer edge of the completed traffic stripe, the distance between the string and the edge of the traffic stripe shall not exceed three-fourths of one inch (3/4") when measured anywhere along any 100' interval of the tangent alignment. On curved alignment, the outer edge of the traffic stripe shall not deviate more than three-fourths of one inch (3/4") from the true arc. The lengths of the gaps and individual stripes that form broken traffic stripes shall not deviate more than 2" from the lengths required to produce a uniformly repeating, broken-stripe pattern.

Payment shall be at the unit price bid per linear foot for Thermoplastic Traffic Stripes and at the unit price bid per square foot for Thermoplastic Pavement Markings, and shall include full compensation for furnishing all labor, material, tools, equipment and incidentals, and for doing all work involved in placing thermoplastic traffic stripes and markings as specified in these Special Provisions and as directed by the Engineer.

ITEM NO. 58 - PAVEMENT MARKER TO PLACE

Raised reflective pavement markers shall conform to Section 32-2 of the City Standard Specifications, Section 85, "Pavement Markers," of the State Standard Specifications and these special provisions. The second paragraph in Section 85-1.02 "Type of Markers", of the State Standard Specifications shall not apply.

Blue raised reflective fire hydrant markers with two reflective faces shall be included in this item of work. Hydrant markers shall be placed in the street, 6"-12" off the centerline and perpendicular to the fire hydrant.

Certificate of compliance shall be furnished for pavement markers to certify the pavement markers comply with the Specifications contained herein.

Payment shall be at the unit price bid per each and shall include full compensation for furnishing all labor, material, tools, equipment and incidentals, and for doing all work involved in placing the pavement markers as shown on the Plans, as specified in these Special Provisions and as directed by the Engineer.

ITEM NO. 59 - PAINTED PAVEMENT STRIPE TO PLACE
ITEM NO. 60 - PAINTED STALL MARKINGS TO PLACE

Painted parking stripe and stall markings shall be applied in conformance with the provisions in Section 32-3 "Painted Pavement Markings" and Section 84, "Traffic Stripes and Pavement Markings," of the Standard Specifications and these special provisions.

The Contractor shall notify the Engineer five (5) working days prior to the start of painting operations. The contract item for Painted Pavement Markings includes placing new stall number markings at every existing and proposed parking stall in the Amtrak Station Parking Lot site. In addition to the improvements shown on the plans, the contractor shall coordinate with the engineer to develop the parking stall numbering and sequence for the remaining Amtrak parking lot site, including stalls shown on the plans and not shown on the plans, and submit the proposed numbering to the engineer for approval prior to renumbering the existing parking lot.

Section 84-3.02 materials of the State Standard Specifications shall be amended to read as follows:
Paint for traffic pavement markings shall be Fast Dry, Low VOC, Solvent Base Paint - white, yellow, and black. Specifications available from the City of Sacramento, Technical Services Division, 927 10th Street, Room 300, Sacramento, CA 95814-2702.

The paint thickness shall be 12 to 14 mils wet.

THINNING OF PAINT WILL NOT BE ALLOWED.

The Contractor shall provide the Engineer with a manufacturer's certificate of compliance, which certifies that the paint and glass beads comply with the specifications contained herein. The Contractor shall also provide the Material Safety Data Sheet (MSDS) on all material.

Included in this item are painted stripes and stall markings.

The existing painted parking stall numbers shall be covered with Fine Seal Coat type, per section 37-1 "Seal Coats" in the State Standard Specifications. The seal coat shall completely cover the existing stall numbers and be placed in accordance with the State Standard Specifications.

The color of the painted traffic stripes and pavement markings shall conform to the requirements in ASTM Designation: D 6628-01.

Retroreflectivity of the paint stripes and stall markings shall conform to the requirements in ASTM Designation: D 6359-99. White painted traffic stripes and pavement markings shall have a minimum initial retroreflectivity of 250 mcd·m-2·lx-1.

<u>Tolerances and Appearance</u>

The completed striping and pavement markings shall have clean and well-defined edges without deformations, and shall be free of tears or other disfigurements. Improperly placed, defective, or

disfigured legends shall be immediately removed from the pavement surface by methods approved by the Engineer. All such removal work shall be at the Contractor's expense.

Payment shall be at the unit price bid per linear foot of painted pavement stripes and at the unit bid price per each stall marking (measured as one per parking stall) and shall include full compensation for furnishing all labor, material, tools, equipment and incidentals, including fine seal coat over existing numbers, and for doing all work involved in placing painted pavement striping and stall markings, as specified in these Special Provisions and as directed by the Engineer.

ITEM NO. 61 - AUDIO BIRD CONTROL DEVICE TO INSTALL

The work to be performed includes furnishing and installing an audio bird control device as shown on the plans and in conformance with the manufacturer's instructions and recommendations and these special provisions.

GENERAL

1.1 SUBMITTALS

A. Submittals for Review:
   1. Product Information: Include product data, installation requirements and instructions, programming and operating instructions.
   2. Shop drawings: Show installation details, proposed locations of all speakers, control units and associated devices, equipment mounting details, conduit locations, and connections to power supplies.

1.2 QUALITY ASSURANCE

A. Power source: UL listed.

PRODUCTS

1.3 MANUFACTURERS

A. Acceptable Manufacturers:

   1. Bird-X, Inc.
      a. Contact information:
         Tom Olmsted, National Account Manager
         300 N. Oakley Blvd.
         Chicago, IL. 60612
         Direct Line: 312-226-8785
         Fax: 312-226-2480

B. Approved equal.

1.4 SYSTEM DESCRIPTION

A. Sonic bird repeller that emits naturally recorded bird distress calls and predator cries that frighten, confuse and disorient pest birds within the effective range.

1. Sonic repeller uses high-frequency digital recordings
2. Customizable settings.
3. Multiple-speaker system, up to 4 speakers per control unit. Fully programmable for volume, sound delays, and hours of operation.
4. Weatherproof, NEMA Rated casing.
5. Sonic – emits audible sounds that deter pest birds.
6. Natural sounds – uses naturally recorded bird distress signals, bird alarm calls, and predator cries.
7. Weatherproof – NEMA Rated casing is designed to withstand outdoor use.
8. Real sounds – high-quality digital playback of naturally recorded threats.

1.5 MATERIALS

A.Super BirdXPeller PRO

1. Dimensions: Control unit 9" x 9" x 5.25", speakers 4" x 4" x 6" with 100 ft. of cable per speaker
2. Box dimensions: 19" x 13" x 7" / Shipping weight: 12 lbs
3. Speakers: 8 ohms, 75 watts
4. Power Requirements: 110v or 220vAC or 12vDC. Provide required 110vAC adaptors and batteries.
5. 110v cord is 50 ft / 220v and 240v cords are 6 ft
6. Sound Pressure: 105–110 db at 1 meter
7. Frequency: 3–3 kHz
8. Compliance: Supply power source is UL and CE listed
9. EPA Est. 075130-OR0001

INSTALLATION

The audio bird control device shall be installed per the manufacturer's instructions and approved shop drawings.

PAYMENT

Payment shall be at the unit price bid per each of audio bird control device and shall include full compensation for furnishing all labor, material, tools, equipment and incidentals, and for doing all work involved in furnishing and installing audio bird control device, as specified in these Special Provisions and as directed by the Engineer.

ITEM NO. 62 - AUTOMATIC IRRIGATION SYSTEM TO INSTALL

The work to be performed includes furnishing a fully automatic system installed in place without further cost to the Owner.

This item shall consist of furnishing and installing Automatic Irrigation Systems as shown on the Plans, in conformance with the applicable paragraphs of Sections 10, 27, 334, and 36 of the Standard Specifications and these Special Provisions.

Area A
Water for the sprinkler irrigation system shall be obtained by connecting to the existing one and one-half inch (1 1/2") copper pipe.

Included in this item is the sawcutting, excavation and backfilling necessary to install the point of connection, including tap to the existing copper pipe water service, standard valve, and associated piping, placing sleeves under pavement and concrete, complete in-place as shown on City Standard Drawing W-606.

The Point of Connection shall be placed where shown on the plans and as directed by the Engineer. Cost shall be included in the lump sum cost of the irrigation system and shall include full compensation for furnishing all labor, materials, tools, equipment, and incidentals, and for doing (or pay for having done) all the work involved in furnishing and installing the connection, complete in place, as shown on the plans, as specified in the Standard Specifications and these special provisions, and as directed by the Engineer.

Area B
The Contractor shall make the arrangements for furnishing and applying water until the Point of Connection is established. Water for the sprinkler irrigation system shall be obtained by connecting to the existing sprinkler system on site.

Included in this item is the sawcutting, excavation and backfilling necessary to install the point of connection, including tap to the existing water service, standard valve, and associated piping, placing sleeves under pavement and concrete, complete in-place as shown on City Standard Drawing W-606. Also included in this item is the removal and capping of sprinkler heads within the decomposed granite area that are no longer needed as directed by the Engineer.

The Point of Connection shall be placed where shown on the plans and as directed by the Engineer. Cost shall be included in the lump sum cost of the irrigation system and shall include full compensation for furnishing all labor, materials, tools, equipment, and incidentals, and for doing (or pay for having done) all the work involved in furnishing and installing the connection, complete in place, as shown on the plans, as specified in the Standard Specifications and these special provisions, and as directed by the Engineer.

Automatic Controllers shall be as indicated on the Plans.

Pressure Main Line shall be polyvinyl chloride (PVC) plastic pipe, PVC Schedule 40.

Lateral Line (pipe on discharge side of irrigation control valve) shall be polyvinyl chloride (PVC) plastic pipe, PVC-1120 Class 200.

Sleeve Conduit shall be polyvinyl chloride (PVC) plastic pipe, PVC Schedule 40.

Automatic Electric Control Valves shall be as specified on drawings. Valves shall be placed where shown on Plans and shall be installed a maximum of twelve inches (12") below finished grade.

Valve Boxes shall be installed in conformance with Section 10-53, and Drawing No. LA-3 of the Standard Specifications.

Electrical shall conform to Section 34 of the Standard Specifications. See Electrical Sheets for service points. (Automatic Controller 'A.')

Quick Coupling Valves shall be placed where shown on the Plans and shall be installed in conformance with Drawing No. LA-2 and with Section 10-54 of the Standard Specifications.

Ball Valves shall be as specified on drawings. Valves shall be placed where shown on Plans and installed as shown on the drawings.

Payment shall be made at the lump sum price bid and shall include full compensation for furnishing all labor, material, tools, equipment, and incidentals and for doing all work involved in installing Automatic Irrigation Systems as shown on the Plans, as specified in these Special Provisions and as directed by the Engineer.

ITEM NO. 63 - SOIL PREPARATION & FINISH GRADING

This item shall consist of importing of topsoil, removing existing plants, soil preparation in planting areas, and finish grading of subgrade for all landscape areas, as shown on the Plans, in conformance with Sections 10 and 35 of the Standard Specifications and these Special Provisions.

Remove Existing Plants (Area 'B')
Existing plants, whether shown on plans or not, if directly or indirectly impacted by new improvements, shall be removed. Existing trees to be removed and to remain are shown on plans. Shrubs are not shown.

Imported Topsoil (Area 'A')
Prior to placement of imported topsoil, scarify vertical and horizontal surfaces. Install imported topsoil in 2-1/2" lifts. Final soil placement shall be fine graded for mounding. Soil shall contain adequate moisture to achieve compaction. Each lift shall be wet and rolled separately. Compact to 90%. Do not over-compact. Surface shall be smooth, uniform and true to line and grade; free of lumps, depressions and irregularities.

Imported Topsoil shall be loose, friable, fertile sandy loam character, containing an amount of organic matter normal to the region, capable of sustaining healthy plant life, and reasonably free from subsoil, roots, heavy or stiff clay, stones larger than 1" in greatest dimension, noxious weeds, sticks, brush, litter, and other deleterious matter.

Obtain topsoil from sources locally available.

Care shall be taken to avoid damage to any new or existing utilities. Encroachment on new or existing trenches previously backfilled and compacted, shall be reported immediately to the Resident Engineer.

Submit a representative sample (approximately one quart size) to the project representative for approval prior to delivery to the site.

Soil Amendment
Soil Amendment shall be in conformance with Section 10, Paragraph 39, of the Standard Specifications.

Soil Conditioner shall be humus (bacteria included based fertilizer and soil conditioner with soil penetrant added) as manufactured by 'Gro-Power' or approved equal and shall consist of the following percents by weight:

5%	Nitrogen
3%	Phosphoric Acid
1%	Potash
50%	Humus
15%	Humic Acids

Soil Preparation of all planting areas shall consist of uniformly spreading and cultivating by means of a mechanical tiller into the top six inches (6") of topsoil, a mixture of three (3) cubic yards of soil amendment per one thousand (1,000) square feet of planting area, plus one hundred fifty (150) pounds of soil conditioner per one thousand (1,000) square feet of planting area.

Finish grade shall be reviewed and approved by the Engineer before proceeding with planting.

Decomposed Granite (Area 'B')
Decomposed Granite shall be golden-brown in color; a mixture of fines to three-eighths inch (3/8") sized particles with no clods; free of vegetation, other soils, debris and rocks; and of such nature that it can be compacted readily under watering and rolling.

Prepare all areas to receive decomposed granite, and treat sub-grade with weed control. Install a two-inch (2") lift, and wet and roll to compact to ninety percent (90%). Install the remaining material to achieve the required thickness when it is wet and rolled. Remove all weed grass and re-compact the surface by the end of the landscape maintenance period.

Payment shall be made at the lump sum price bid, and shall include full compensation for furnishing all labor, material, tools, equipment, and incidentals and for doing all work involved in Soil Preparation and Finish Grading as shown on the Plans, as specified in these Special Provisions and as directed by the Engineer.

ITEM NO. 64 - SHRUBS TO PLANT

This item shall consist of furnishing, preparing and planting Shrub Areas in conformance with Sections 10 and 35 of the Standard Specifications and as amended by these Special Provisions.

Preparing of Planting Areas shall conform to Section 35-5 of the Standard Specifications.

Soil in Shrub areas adjacent to paved areas shall be graded so that after settlement, the soil will be one inch (1") below the top of the adjacent paving or curb.

The following shall NOT be required from section 35-5 of the Standard Specifications: "The soil shall be kept wet for a period of fourteen (14) days to permit germination of weeds. After the fourteen- (14) days, the area shall be allowed to dry to a condition that any spray equipment will not damage the existing grades. Weeds shall be sprayed with an approved chemical, which controls both broadleaf plants and grasses, but will not contaminate the soil, such as Roundup."

Weed Control

Weed Control shall conform to Section 35-6 of the Standard Specifications.

Granular Pre-emergent Herbicide shall be Ronstar G Pre-emergent Herbicide or approved equal applied in all shrub and groundcover planter areas after completion of all planting and before installation of wood mulch at the rate as recommended by the manufacturer. Contractor shall provide proof of application of pre-emergent herbicide to the Landscape Architect.

Soil Preparation Materials

Soil Conditioner/Fertilizer shall be Tri-C 6-2-4 w/ 5% Sulfur, or approved equal. Soil conditioner shall contain 6-2-4 (NPK ratio) and 20% humic acids, and shall be applied at the rate of 70 lbs. per 1,000 square feet. Soil conditioner shall be cultivated into the top six inches (6") of soil and thoroughly watered in. Contractor shall provide proof of soil conditioner application to the Project Construction Inspector. For supplier call 800-927-3311 or 909-590-1790.

Planting Materials

Schedules shown on the plans are for the Contractor's convenience only. The Contractor shall confirm all quantities and shall plant as required by the Planting Plan when discrepancies exist.

Plants shall be of the variety and size as shown on the plans and shall conform to Sections 10-43 and 35-7 of the Standard Specifications.

Fertilizer Tablets shall be 21-gram tablets with 20-10-5 NPK ratio, and shall be applied as follows:

One (1) tablet per One (1) gallon container
Three (3) tablets per Five (5) gallon container

Backfill Mix shall consist of three parts native soil to one part soil amendment. Soil Amendment for planting pits shall be a 90% bark based product, fir, and 0-1/4" in size, treated with nitrogen having a 2-0-0 NPK ratio.

Mulch shall be evenly spread in all shrub and groundcover areas to a three-inch (3") finished depth as specified on the plans. Mulch shall be shredded cedar bark, fibrous in nature, one-inch (1") minimum to four-inch (4") maximum in length. Contractor shall submit a mulch sample to the Landscape Architect for approval at least forty-eight (48) hours prior to installation. Mulch existing on site in Area 'A' shall be collected and stored for use in planters.

Payment shall be made a the lump sum price bid and shall include full compensation for furnishing all labor, materials, tools, equipment and incidentals and for doing all work involved in Shrub and Groundcover Areas to Plant as shown on the plans, as specified in these Special Provisions and as directed by the Engineer.

ITEM NO. 65 - LANDSCAPE MAINTENANCE

This item shall consist of Plant Establishment and Maintenance for the landscape planting areas installed in this Contract as shown on the Plans in conformance with Sections 35-8 through 35-14 of the Standard Specifications and as amended by these Special Provisions.

Start of Maintenance Period shall conform to Section 35-8 of the Standard Specifications.

Watering shall conform to Section 35-9 of the Standard Specifications and these Special Provisions.

Plant replacement shall conform to Section 35-10 of the Standard Specifications.

Landscape Maintenance period shall conform to Section 35-11 of the Standard Specifications and be amended as follows: The Landscape Maintenance Period shall be ninety (90) calendar days. The Landscape Maintenance period shall begin when landscape and irrigation system is complete and fully operational, as verified by the Owner's Representative in writing. Plant Establishment and Landscape Maintenance shall continue until final acceptance of the work.

Shrub Maintenance: Maintain shrub areas free of weeds. Shrubs shall be pruned & shaped as directed by the landscape architect.

Pre-Final Inspection shall conform to Section 35-12 of the Standard Specifications and be amended as follows: Seven (7) weeks after the Start of Maintenance Period, the engineer and the Landscape Architect shall conduct a pre-final inspection. At the pre-final inspection, or at anytime thereafter, should the Engineer determine that the project meets the requirements of the final acceptance of the work he/she may issue final acceptance of the project to the Contractor.

Final Inspection shall conform to Section 35-13 of the Standard Specifications. At the time of final acceptance of the work, any square yard of the shrub and groundcover planted areas shall be ninety percent (90%) weed free, as determined by the Engineer.

Payment shall be made at the lump sum bid and shall include full compensation for furnishing all labor, tools, materials, equipment, and incidentals and for doing work involved in landscape maintenance, as shown on the Plans, as specified in these Special Provisions and as directed by the Engineer.

Bid shall include full compensation for furnishing all labor, material, tools, equipment, and incidentals and for doing all work involved in landscape maintenance as shown on the Plans, as specified in these Special Provisions and as directed by the Engineer. Landscape Maintenance Period shall be for a minimum period of ninety (90) calendar days.

ITEM NO. 66 - PARKING LOT LIGHTING INSTALLATION

The work to be performed for this item, in general, includes furnishing and installing all necessary equipment and materials for a parking lot lighting system as indicated on the Plan sheets and these Special Provisions.

Included in the work shall be furnishing and installing parking lot lights, conduits, conductors, pull boxes, raised foundations, photocell, traffic control measures, incidentals, and all appurtenances shown on the Plans and called for in these Special Provisions.

Contractor shall supply and install lockable lids for the pull boxes. See Special Provisions for details.

Work also includes removing all project related Underground Service Alert (USA) marks from the project site. Contractor shall also remove all tire marks, equipment marks, machinery marks, and liquids, such as oil and machinery coolant, on the sidewalk, driveway, and curb ramp areas that was caused by the contractor during construction.

Payment shall be at the lump sum price bid and shall include full compensation for furnishing all labor, materials, tools, equipment and incidentals, and for doing all work involved with furnishing and installing the parking lot lighting systems in the City's parking lot and CSRM State Museum parking lot, spare lighting equipment, electrical service for irrigation, ticket splitter and bird repellant control device, as shown on the Plans, as specified in these Special Provisions and as directed by the Engineer.

ITEM NO. 67 - PERMEABLE INTERLOCKING PAVERS

PART 1 - GENERAL

1.01 References

A. American Society for Testing and Materials (ASTM)

1. C 67, Standard test Methods for Sampling and Testing Concrete Masonry Units and Related Units.
2. C 131, Standard Test Methods for Resistance to Degradation of Small-Size Coarse Aggregate by Abrasion and Impact in the Los Angeles Machine.
3. C 136, Method for Sieve Analysis for Fine and Coarse Aggregate.
4. D 448, Standard Classification for Sizes of Aggregate for Road and Bridge Construction.
5. C 936, Standard Specifications for Solid Interlocking Concrete Pavers.
6. C 979, Specification for Pigments for Integrally Colored Concrete.
7. D 698, Test Methods for Moisture Density Relations of Soil and Soil Aggregate Mixtures Using a 5.5 lb (2.49 kg) Rammer and 12 in. (305 mm) drop.
8. D 1557, Test Methods for Moisture Density Relations of Soil and Soil Aggregate Mixtures Using a 10 lb (4.54 kg) Rammer and 18 in. (457 mm) drop.
9. D 1883, Test Method for California Bearing Ratio of Laboratory-Compacted Soils.
10. D 4254, Standard Test Methods for Minimum Index Density and Unit Weight of Soils and Calculation of Relative Density.

B. Interlocking Concrete pavement Institute
   1. Permeable Interlocking Concrete Pavement Manual.

1.02 Submittals

A. Manufacturer's drawing and details: Indicating perimeter conditions, junctions with other materials, expansion and control joints, paver layout, installation and setting details. Indicate layout, pattern and relationship of paving joints to fixtures and project formed details.
B. Sieve analysis of aggregates for base and bedding materials per ASTM C 136.
C. Permeable concrete pavers:
   1. Manufacturer's product catalog sheets with specifications.
   2. Four representative full size samples of each paver type, thickness, color, and finish.
   3. Accepted samples become the standard of acceptance of the work for this Section.
   4. Laboratory test reports certifying compliance of manufacturer's concrete pavers with ASTM C 936.
   5. Manufacturer's material safety data sheets for safe handling of the specified materials and products.
D. Paver Installation Subcontractor:
   1. Job references from projects of a similar size and complexity. Provide Owner/Client/General Contractor names, postal address, phone, fax and email address.

1.03 Quality Assurance

A. Utilize an installer having successfully completed concrete paver installation similar in design, material, and extent indicated on the plans.
B. Mock-Ups:
   1. Install a 10 ft x 10 ft (3 x 3 m) paver area.

2. Use this area to determine surcharge of the bedding, sand layer, joint sizes, lines, laying pattern, color and texture of the job.
3. This area will be used as the standard by which the work will be judged.
4. Subject to acceptance by owner, mock-up may be retained as part of finished work.
5. If mock-up is not retained, remove and properly dispose of mock-up.

1.04 Delivery, Storage, and Handling

A. Comply with manufacturer's ordering instructions and lead-time requirements to avoid construction delays.
B. Delivery: Deliver materials in manufacturer's original, unopened, undamaged container packaging with identification tags intact.
   1. Coordinate delivery and paving schedule to minimize interference with normal use of buildings adjacent to paving.
   2. Deliver concrete pavers to the site in steel banded, plastic banded, or plastic wrapped cubes capable of transfer by forklift or clamp lift.
   3. Unload pavers at job site in such a manner that no damage occurs to the product of existing construction.
C. Storage and Protection: Store materials in protected area such that they are kept free from mud, dirt, and other foreign materials.

1.05 Environmental Requirements

A. Do not install in rain or snow.
B. Do not install frozen bedding materials.

PART 2 - PRODUCT

2.01 Permeable Interlocking Concrete Pavers

A. Permeable Interlocking Paver Units shall be UNI Eco-Stone or approved equal.
   1. Material Standard: Comply with material standards set forth in ASTM C 936.
   2. Color and Finish: Antique Pewter with Sand Blast Finish
   3. Color Pigment Material Standard: Comple with ASTM C 979.
   4. Size: 4-1/2 inches (112 mm) x 9 inches (275 mm) x 3-1/8 inches (80 mm) thick.
   5. Average Compressive Strength (ASTM C 140): 8000 psi (55 MPa) with no individual unit under 7200 psi 950 MPa).
   6. Average Water Absorbption (ASTM C 140): 5% with no unit greater than 7%.

2.02 Crushed Stone Filler, Bedding, and Base

A. Crushed stone with 90% fractured faces, LA Abrasion <40 per ASTM C 131, minimum CBR of 80% per ASTM D 1883.
B. Do not use rounded river gravel.
C. All stone materials shall be washed with less than 1% passing the No. 200 sieve.

D. Joint/opening filler, bedding and base: conforming to ASTM D 448 gradation as shown in Tables 1, 2 and 3 below:

Table 1
Grading Requirements for ASTM No. 8 Bedding and Joint/Opening Filler

Sieve Size	Percent Passing
½ in. (12.5 mm)	100
3/8 in. (9.5mm)	85to 100
No. 4 (4.75 mm)	10 to 30
No. 8 (2.36 mm)	0 to 10
No. 16 (1.16 mm)	0 to 5

Table 2
Grading Requirements for ASTM No. 67 Base

Sieve Size	Percent Passing
1 in. (25 mm)	100
3/4 in. (19 mm)	90 to 100
3/8 in. (9.5 mm)	20 to 55
No. 4 (4.75 mm)	0 to 10
No. 8 (2.36 mm)	0 to 5

Table 3
Grading Requirements for ASTM No. 4 Base

Sieve Size	Percent Passing
2 in. (50 mm)	100
1-1/2 in. (37 mm)	90 to 100
1 in. (25 mm)	20 to 55
3/4 (19 mm)	0 to 15
3/8 in. (9.5 mm)	0 to 5

2.03 Accessories

A. Provide accessory materials as follows:
   1. Woven Geotextile Fabric meeting:
      a. ASTM D4751-AOS of 50-70.
      b. ASTM D4633 min trapezoidal tear strength 100 x 60 lbs.
      c. Minimum COE specified open area of 4%.

   2. Geomembrane meeting:
      a. Made from polyethylene, polypropylene or polyvinyl chloride.
      b. It shall be nonpermeable and have the following minimum properties:
         i. Thickness: 16 mil minimum
         ii. Tensile Strength ASTM D 638 – 76 ppi (13 N/mm)
   3. Perforated Plastic Pipe
      a. Perforated Plastic Pipe shall be Schedule 40 HDPE.
      b. The pipe shall be perforated in compliance with AASHTO M278.

PART 3 - EXECUTION

3.01 Examination

A. Acceptance of Site Verification of Conditions:
   1. General Contractor shall inspect, accept and certify in writing to the paver installation subcontractor that site conditions meet specifications for the following items prior to installation of interlocking concrete pavers.
      a. Verify that subgrade preparation, compacted density and elevations conform to specified requirements. Subgrade to be compacted to 95% standard Proctor density per ASTM C 698.
      b. Provide written density test results for soil subgrade.
      c. Verify location, type, and elevations of edge restraints, utility structures and drainage pipes and inlets.
   2. Do not proceed with installation of bedding and interlocking concrete pavers until subgrade soil conditions are corrected by the General Contractor or designated subcontractor.

3.02 Preparation

A. Verify that the soil subgrade is free from standing water.
B. Stockpile joint/opening filler and base materials such that they are free from stnding water, uniformly graded, free of organic material or sediment, debris, and ready for placement.

3.03 Installation

A. General
   1. Any excess thickness of soil applied over the excavated soil subgrade to trap sediment from adjacent construction activities shall be removed before application of the geomembrane and sand material.
   2. Keep area where pavement is to be constructed free from sediment during the entire job. Geotextile, Base and bedding materials contaminated with sediment shall be removed and replaced with clean materials.
   3. Do not damage any inlets, utilities or any other appurtenances during installation. Report any damage to the Engineer.
B. Geotextiles and Geomembranes
   1. Place geomembrane on bottom and sides of soil subgrade. Secure in place to prevent wrinkling from vehicle tires and tracks.
   2. Overlap a minimum of 18 inches (0.45 m) in the direction of drainage.
C. Subsurface Drainage
   1. Fully wrap the subsurface drain with filter fabric.
   2. Place the subsurface drain, filter fabric and the No. 4 Base in the drainage trench as shown on the plans.
D. Sand and Open-graded Base
   1. Place the geotextile over the subsurface drain and secure in place.

2. Spread and compact the sand in 4 inch (100 mm) lifts without wrinkling or folding the geomembrane or geotextile. Place sand to protect geomembrane/geotextile from wrinkling under equipment tires and tracks.
3. For each lift, make at least two passes in the vibratory mode then at least two in the static mode with a minimum 10t (10T) vibratory roller.
4. The surface tolerance of the compacted sand should not deviate more than +/- 1/2 inch (+/- 12.5 mm) over a 10 ft. straightedge.
5. Lay the geotextile on top of the sand and secure in place to prevent wrinkling from vehicle tires and tracks.
6. Place 1 inch of sand on top of the geotextile and compact in place.
7. Moisten, spread and compact No. 67 base in 4 inch (100 mm) lifts over the compacted sand with a minimum 10t (10T) vibratory roller until there is no visible movement of the No. 67 aggregate. Do not crush aggregate with the roller.
8. The surface tolerance of the compacted No. 67 base should not deviate more than +/- 1 inch (+/- 25 mm) over a 10 ft. (3 m) straightedge.
9. The In-place density of the base shall be checked per ASTM D 4254. Compacted density shall be 95% of the laboratory index density established for the base.

E. Bedding Layer
1. Moisten, spread and screed the No. 8 stone bedding material.
2. Fill voids left by removed screed rails with No. 8 stone.
3. The surface tolerance of the compacted surface should not deviate more than +/- 3/8 inch (+/- 10 mm) over a 10 ft. straightedge.
4. Do not subject screeded bedding material to any pedestrian or vehicular traffic before paving unit installation begins.

F. Permeable Interlocking Concrete Pavers and Joint/Opening Fill Material
1. Do not use paving units with chips, cracks, voids, discoloration, or other visible defects. Pavers shall be clean and free of foreign materials before installation.
2. Lay the pavers in the pattern and joint widths shown on the plans. Maintain straight pattern lines.
3. Fill gaps at the edges of the paved area with cut units. Cut pavers subject to tire traffic shall be no smaller than 1/3 of a whole unit.
4. Cut pavers to be placed along the edges with a double bladed splitter or masonry saw.
5. Fill the openings and joints with No. 8 stone.
6. Remove excess aggregate by sweeping pavers clean.
7. Compact and seat the pavers into the bedding material using a low-amplitude, 75-90 Hz plate compactor capable of at least 4,000 lbs (18 kN) centrifugal compaction force. This will require at least two passes with the plate compactor.
8. Do not compact within 6 ft. (2 m) of the unrestrained edges of the paving units.
9. Apply additional aggregate to the openings and joints, filling them completely. Remove excess aggregate by sweeping and compact the pavers. This will require at least two passes.
10. All pavers within 6 ft. (2 m) of the laying face must be left fully compacted at the completion of each day.
11. The final surface tolerance of compacted pavers shall not deviate more than +/- 3/8 inch (+/- 10 mm) under a 10 ft. (3 m) long straightedge.

12. The surface elevation of pavers shall be 1/8 to 1/4 inch (3 to 6 mm) above adjacent drainage inlets, concrete collars or channels.

3.04 Field Quality Control

A. After sweeping the surface clean, check final elevations for conformance to the drawings.
B. Lippage: No greater than 1/8 inch (3 mm) difference in height between adjacent pavers.
C. The surface elevation of pavers shall be 1/8 to 1/4 inch (3 to 6 mm) above adjacent drainage inlets, concrete collars or channels.

3.05 Protection

A. After work in this section is complete, the Contractor shall be responsible for protecting work from sediment deposition and damage due to subsequent construction activity on the site.

PART 4 - PAYMENT

Payment shall be at the unit price bid per square foot and shall include full compensation for furnishing all labor, materials, (including but not limited to pavers, aggregate bases, sand, subsurface drainage system, geotextile, geomembrane and filter fabric) tools, equipment, incidentals and for doing all work involved in placing Permeable Interlocking Pavers as shown on the Plans, as specified in these Special Provisions and as directed by the Engineer.

ITEM NO. 68 - MOBILIZATION

Mobilization shall conform to the provisions in Section 11, "Mobilization," of the State Standard Specifications.

Payment shall be at the "lump sum" price bid and shall include full compensation for all labor, materials, tools, equipment and incidentals, and for doing all work involved with mobilization as specified in these Special Provisions, State Standard Specifications and as directed by the Engineer.

SECTION NO. 11 - ELECTRICAL PROVISIONS WHICH APPLY TO ALL ELECTRICAL ITEMS

11-1 ELECTRICAL COST BREAK-DOWN

A Schedule of Values (cost break-down) for lump sum electrical items must be included with the bid. Otherwise, the bid will be deemed non-responsive.

The sum of the amounts for the units of work listed in the cost break-down for electrical work shall be equal to the contact lump sum price bid for the work. The unit price is the material and installed cost with overhead, profit, and labor.

The Contractor shall determine the quantities to complete the work shown on the plans. The quantities and values shall be included in the cost break-down submitted with the bid package. The Contractor shall be responsible for the accuracy of the quantities and values. No adjustment in compensation will be made in the contract lump sum prices paid for the various electrical work items due to any differences between the quantities shown in the cost break-down furnished by the Contractor and the quantities required to complete the work as shown on the plans and as specified in these special provisions. At the Engineer's discretion, the approved cost break-down may be used to determine partial payments during the progress of the work and as the basis of calculating the adjustment in compensation for the items of electrical work due to changes ordered by the Engineer. When an ordered change increases or decreases the quantities of an approved cost break-down, the adjustment in compensation may be determined, at the Engineer's discretion, in the same manner specified for increases and decreases in the quantity of a contract item of work in accordance with Section 4-1.03B, "Increased or Decreased Quantities", of Caltrans Standard Specification. The cost break-down submitted by the responsive qualified low bid Contractor shall be approved by the Engineer before any partial payment for the items of electrical work shall be made based on the cost break-down. The cost break-down shall include, but is not limited to: type of equipment, estimated quantity, and unit price ($/LF or each). See below for sample items. Some items from the list may not apply to the project, and other items may need to be included. Contractor shall submit break-down in a spreadsheet format.

Conduit – list each size (2", 3", etc.), installation method, quantity (LF), unit price ($/LF).

Conductor – list each size (#6, #8, etc.), quantity (LF), and unit price ($/LF).

Pull Box – list type (#5, #6, etc), quantity, and unit price ($/EA).

Electrical Service – type (metered or unmetered), quantity, and unit price ($/EA).

Traffic Signal and Streetlight Standards with Foundation – list each standard (such as 1-B, Type 16, post top, mast arm, ornamental, etc), quantity, and unit price ($/EA).

Luminaires – type (200 watt fixture, etc.), quantity, unit price ($/EA).

Traffic Signal and Pedestrian Displays – quantity and unit price ($/EA).

Pedestrian Push Button – quantity and unit price ($/EA).

Detector Loop – type (5'x5', 6'x6', etc), quantity and unit price ($/EA).

Detector Lead-In Cable – quantity and unit price ($/LF).

Detector Handhole – quantity and unit price ($/EA).

Emergency Vehicle Detector System – quantity and ($/EA).

Traffic Signal Controller and Cabinet – quantity and unit price ($/EA).

Battery Back-Up System – quantity and unit price ($/EA).

Interconnect Cable – quantity and unit price ($/LF).

11-2 CONDUIT MATERIAL

Conduit to be installed underground shall be Schedule 40 polyvinyl chloride (PVC) or Schedule 40 polyethylene conduit as described herein unless otherwise indicated or specified. PVC conduit shall comply with the specifications in Section 34-10 of the City Standard Specifications. High-density polyethylene conduit shall comply with the following specifications:

Conduit shall be fabricated from polyethylene shall be in conformance with applicable ASTM and NEMA standards and Article 347 of the National Electrical Code. Non-black polyethylene conduit shall contain not less than 2500 parts per million (ppm) of a hindered amain ultraviolet light stabilizer. Ultraviolet stabilization additive for black polyethylene conduit shall consist of a carbon black loading of 2.5% ± 0.5% by weight.

Conduit shall be manufactured from high-density polyethylene resin designated as Type III, Category 5, Class C, Grade P34 material in accordance with ASTM D1248.

Duct seal shall be installed on all conduits.

11-3 CONDUIT INSTALLATION

Conduit installation shall be in accordance with Section 34-9, 34-10 of the Standard Specifications and as modified by these Special Provisions. "Jet-rodding" is not permitted.

Conduits terminating in pull boxes, standards, pedestals and cabinets shall rise vertically and shall not slope in any direction. Conduits terminating in standards, pedestals, and cabinets shall terminate one and one-half inches (1½") above finished grade. Conduits shown on the Plans to be adjacent and parallel to each other shall be installed in the same trench or drill hole unless otherwise specified or directed by the Engineer. Under the sidewalk, conduit shall be laid to a depth of not less than eighteen inches (18") below the sidewalk grade.

Conduits shall be installed by trenching or directional drilling method.

All applicable requirements in these Special Provisions to locate, and to protect existing utilities, utility laterals, obstructions, and other facilities in the area shall be conformed to and no additional compensation will be allowed therefor. Contractor is responsible for any damage and the repair of any existing facilities damaged by his/her trenching or drilling operations. Contractor is responsible for any potholing necessary and cost for potholing shall also be included in price paid for applicable items of work and no additional compensation will be allowed therefor. All trenching or drilling work shall be contained within the City right-of-way. If utilities or other obstacles are encountered at the specified conduit depth, any additional drilling required to avoid the obstacle shall be made at the Contractor's expense and no additional compensation will be allowed therefor. Location of trenching and drill holes shall take into consideration minimal impact to the street pavement while still meeting the requirements of these Special Provisions.

A. Trenching Method

Installation of conduit by trenching shall be in conformance with the Plans and these Special Provisions. See plan sheets for trench details. Trenches shall be backfilled or covered at the end of each work day. All conduit installed by trenching shall be anchored every 15 feet to the bottom of the trench, with an approved method, so as to prevent the conduit from floating when the concrete is backfilled into the trench.

1. Trenches in reconstructed roadways shall be backfilled with slurry portland cement per cubic yard and fine type aggregate as defined in the Standard Specifications Section 10-5. A red oxide in the amount of 5 lbs. per cubic yard shall be mixed uniformly throughout the slurry cement. See plan sheets for amount of sack slurry and depth of conduit(s).

2. Trenches in existing roadways shall use the "T-Trench" method. The portion over the trench shall be paved with asphalt concrete, Type A with ¾" aggregate (coarse); except on residential streets where the base course shall be Type A, ¾" aggregate (coarse) and surface coarse shall be Type B, ½" aggregate, (medium), per Section 22 of the City Standard Specifications, unless otherwise directed by the Engineer. See plan sheets for width and thickness of asphalt concrete over trench. Trenches shall be backfilled with slurry portland cement per cubic yard and fine type aggregate as defined in the Standard Specifications Section 10-5. A red oxide in the amount of 5 lbs. per cubic yard shall be mixed uniformly throughout the slurry cement. See plan sheets for amount of sack slurry.

B. Directional Drilling Method

Installation of conduit by directional drilling shall be in conformance with the Plans and these Special Provisions.

Conduits shall be installed such that the top of the conduit(s) are not less than eighteen inches (18") below the finished grade in sidewalk areas and not less than thirty inches (30") in all other areas except as otherwise specified or directed by the Engineer.

Prior to the start of directional drilling, the Contractor shall submit a plan which identifies location and size of proposed drill holes, describes process for identifying/locating existing utility services and other underground utilities or obstructions, identifies a proposed "drilling corridor" to avoid conflicts with existing utilities, services and other facilities. This plan shall be submitted to the Engineer a minimum of ten (10) working days prior to the start of work. The Contractor will not be allowed to directional drill until an approved plan is on file with the Engineer

Directional drilling shall be performed by the technique of creating and directing a bore hole along a predetermined path to a specified targeted location where indicated on the plans to install conduits. The technique shall involve the use of mechanical and hydraulic equipment to change

the boring course and shall use instrumentation to monitor the location and orientation of the boring head assembly along the predetermined course. Drilling shall be accomplished with fluid-assisted mechanical cutting. Unless otherwise approved, boring fluids shall be a mixture of bentonite and water or polymers and additives. Bentonite sealants and water will be used to lubricate the drilling head. It is mandatory that minimum pressures and flow rates be used during drilling operations so as not to fracture the subgrade material around and/or above the bore. Uncontrolled jetting (where the primary purpose is to use fluid force to erode soil for creation of the final bore hold diameter) is prohibited. The drilling system shall utilize small-diameter fluid jets to fracture, and mechanical cutters to cut and excavate the soil as the head advances forward.

All drilling shall be located a minimum of three feet (3') from the center of all existing maintenance holes. Drilling that run parallel to any sanitary sewer or storm drainage lines shall maintain a minimum clearance of three feet (3') measured from the centerline of the sewer or drainage line to the adjacent side of the drill hole. Drilling that crosses any sewer or drainage line shall cross at 90 degrees to the line or at a minimum of 45 degrees if a 90 degree crossing is not possible.

11-4 CONDUCTORS

Conductors shall be in accordance with Section 34-12 of the Standard Specifications, except for the following:

1. If the existing ground wire (green 1#10 THW) is used as a pullwire, a new ground wire shall be pulled with the new conductors or cables, unless otherwise specified.

2. Unless otherwise noted, insulation Types THHN and THWN are not approved for installation.

3. The electrolier leads from base to lamp socket shall be No. 12 THW solid wire with 45 mils insulation suitable for 600-volt service for historic decorative, post top and mast arm electroliers.

4. All conductors of AWG #10 or larger shall be identified by printed and embossed labels identifying the UL listing, the insulation type, the voltage rating, the AWG number, and the City of Sacramento. The printed label and the embossed label shall be placed at approximately 90 degrees separation around the center of the conductors. Labels shall appear every one foot interval. Embossed labels shall be between 0.002" to 0.003" in depth and shall not damage the conductors. Label heights shall be no less than 3/32" for AWG #8 or larger, and shall be no less than 2/32" for AWG #10.

11-5 INSPECTION

Inspection shall be in accordance with Section 34-22 of the Standard Specifications and these Specifications.

11-6 PARKING LOT LIGHT IN CITY'S PARKING LOT

A. General

Mastarm parking lot light shall comply with the latest City of Sacramento Standard Specifications and City of Sacramento Detail Drawings, unless otherwise specified in these Special Provisions or Plans.

B. Luminaire

Luminaires to be installed shall be specifically designed for LED use and rated for up to 100,000 hours of operation. Luminaires shall be designed to produce asymmetric distributions conforming to the Illuminating Engineering Society light pattern Type III unless otherwise specified. Luminaire shall utilize a heat sink to efficiently draw heat away from the LED chipset.

The units shall be suitable for two-inch (2") slip filter and mounting.

All new luminaires to be installed shall be inspected by the Engineer prior to installation. Luminaires shall be supplied without photo cell receptacles unless otherwise called for the Plans. All luminaires supplied with photo cell receptacles that will not be used shall be required to completely bypass the receptacle and a shorting plug shall be securely installed in the receptacle.

C. LED

Mastarm LED luminaire shall be Philips Lumec Roadview Model RVS135W80LED4K-LE3-UNIV-GY3-RC, Cooper Model NVA-AA-03-T3A-10k-4-AP-OA/RA1014, or Leotek Model EC3-12M-MV-NW-3-GY-700.

Wall-mounted luminaire shall be Gardco LED Wall Sconce 161, Model no. 161-CWL-3-150LA-6453-NW-UNIV-BLP-F-WS or approved equal.

Doorway luminaire shall be Holophane Glaswerks LED Flat glass, Model no. GELF-105W-4K-AS-2-B-L3 or approved equal.

D. FOUNDATION

The foundation shall be in accordance with the latest City of Sacramento Standard Specifications and City of Sacramento Detail Drawings, unless otherwise specified in these Special Provisions or Plans. Remove concrete forms on poles upon project completion. Remove all plywood, forms, excess and leftover concrete, and other debris as a result from construction upon project completion.

E. SPARE LIGHTING EQUIPMENT

The Contractor's attention is directed to Section 34-23, "Salvage", of the Standard Specifications for address and contact information regarding delivery of spare equipment to the City.

- Gardco LED Wall Sconce 161 luminaire, one (1) spare each.
- Holophane Glaswerks LED luminaire, one (1) spare each.

11-7 PARKING LOT LIGHT IN CSJM STATE MUSEUM PARKING LOT

Mastarm parking lot lights for State Park's museum shall be Visionaire Lighting Parking Star II LED. The model numbers as follows:

- Luminaire model number is PST-2-L-T5-96LC-7-4K-UNV-BOA10-BK-CLS or approved equal.
- Steel pole model number is SNTS-4S-7-22'-12BC-136-S1 (single-head)-BK-GFI or approved equal.
- Steel pole model number is SNTS-4S-7-22'-12BC-136-T9 (three-head)-BK-GFI or approved equal.
- Steel pole model number is SNTS-4S-7-22'-12BC-136-QD (four-head)-BK-GFI or approved equal.

The foundation shall be in accordance with the latest California Department of Transportation Standard Plans for Type 15 standard lighting with 30" extension above the final grade, and the bolt circle will be 12 ¾" diameter. The foundation shall be extended 30" above final grade of pavement.

11-8 ORNAMENTAL STREETLIGHT IN CITY'S PARKING LOT

A. General

Ornamental streetlight shall comply with the latest City of Sacramento Standard Specifications and City of Sacramento Detail Drawings, unless otherwise specified in these Special Provisions or Plans.

B. Pole

The ornamental streetlight pole and luminaire shall be manufactured by the Union Metal Corporation, or approved equal prior to bid. The capital, shaft, and base shall be Union Metal. The **ornamental streetlight shall be Style I at 12'**, unless otherwise specified in the Plans. The model numbers are as follows:

Style I - 10', N874-39-B102-Y3; **Style I - 12', N874-39-B102-Y1**

Each pole shall bear an identification tag which shall list the manufacturer model number of the pole and year and location of manufacture. The identification tag shall be placed inside of the base, facing the handhole, and clearly visible from the outside.

Pole base and shaft shall be of one-piece construction. Pole base, shaft, and globe holder shall consist of aluminum. Maximum diameter difference between bottom of globe holder and top of

shaft shall be ½-inch. Assemblies must be grounded in accordance with the requirements of the National Electrical Code and applicable local codes. If applicable, assembly shall have weatherproof UL listed GFI electrical receptacle capabilities mounted at the top of the pole shaft.

Included for each pole assembly (base, shaft, and luminaire) shall be a minimum of four (4) fully hot-dipped galvanized steel anchor bolts measuring ¾-inch by 30-inch minimum and have a 55,000 psi minimum yield strength and shall conform to ASTM A307 with threaded end, hex nuts (two per bolt), and flat washers (two per bolt) all fully hot-dipped galvanized to ASTM A153. A bolt hole template consisting of a 12-inch bolt circle shall be furnished with the anchor bolts.

Streetlight assembly and all materials used in its manufacture shall meet the requirements of the most current adopted version of the American Association of State Highway and Transportation Officials (AASHTO) "Standard Specifications for Structural Supports for Highway Signs, Luminaires and Traffic Signals" and this specification.

In addition to the requirements of the AASHTO Specification, the post and anchorage shall be designed with a minimum safety factor of two (2) and shall not deflect more than five (5%) percent of the above ground height at full wind loading.

Manufacturer shall make factory and all manufacturing processes open for City Quality Control Inspection if requested by the City Engineer. City shall incur all inspection cost.

Material certifications shall be provided for all ASTM numbers referred to in this specification.

Factory testing shall be provided at the request of the City Engineer in accordance with manufacturer's testing procedures.

Welding shall be conducted by certified welders in compliance with the latest edition of the American Welding Society Specification D1.2, Structural Welding Code – Aluminum. All parts shall be cleaned prior to welding by and approved industry standard method.

C. Luminaire

The luminaire shall be the 424 Lexalite Acrylic Prismatic Top, GE8-9 capital. Luminaire shall be UL listed for wet/damp locations and shall be furnished prewired. Globe holder shall have four (4) 5/16-inch minimum stainless steel set screws (90 degrees) for mounting of the globe. Set screws shall be square head. Allen or Phillips set screws are not acceptable.

Globe shall have IES Distribution Type III or V as specified by the City Engineer. Assembly of top and bottom globe shall be by Lexalite stainless steel band. Globe top shall include a factory installed Lexalite spike aluminum finial. Globes shall be provided with a neck ring. Luminaire shall be designed for LED lighting system.

D. LED

The lighting system shall be LED and manufactured by SimplyLED CAN-70-C, or approved equal. The LED luminaire shall be designed to fit in the 424 Lexalite Acrylic Prismatic Top.

E. Paint

The entire streetlight pole assembly shall have a powder coat finish. The inside and outside of the cast aluminum base shall be powder coated. Exterior surface of the pole base, shaft, and globe holder shall have a smooth or natural finish that shall be uniform along the entire length of the pole assembly. Color shall be Semi-gloss black as specified by the City Engineer. Manufacturer shall supply one (1) quart of touch up. Contractor shall use Sherwin Williams Powdura® Super Durable TGIC Powder Coating, or equivalent, in the specified color. Contractor shall provide Manufacturer certification that all finishing was performed per coating manufacturer specification for the selected coating, prior to delivery of streetlight pole. Field touch up coating is NOT permitted. Poles, bases, and luminaires, which have scratched or otherwise damaged coating surfaces, will not be accepted. Replacement is the responsibility of the contractor. All powder coating shall be done in a climate controlled, self-contained shop.

The surface of the pole shall be prepared as follows:

1) Contaminants such as oil, grease, dirt, etc., shall be removed by solvent cleaning in accordance with SSPC-SP-1 (on surface preparation by solvent cleaning). All welds shall be cleaned of rust, slag and adherent mill scale, and all weld splatter shall be removed, in accordance with SSPC-SP 2, "hand tool cleaning," or SSPC-SP 3, "power tool cleaning."
2) A minimum of a 5-stage chrome phosphate metal treatment, or equivalent, shall be applied after solvent cleaning.
3) After surface preparation of the substrate, grit, dust, or other surface contamination shall be removed and the powder coating applied within 4 hours of completion of blasting or before any detrimental corrosion or recontamination occurs.

   Application:

   a) All traces of abrasives and other debris shall be removed prior to any coating operation.
   b) Coatings shall not be applied when surface and ambient temperatures are outside the temperature and/or relative humidity ranges specified by the powder coating product manufacturer.
   c) Prior to any powder coating application, any area not scheduled for coating (threat, tight fit holes, friction bolted connections, etc.) shall be masked. All base castings shall have doors removed and all base casting surfaces coated inside and out.
   d) Total system dry film thickness (DFT) shall be 5 to7 mils, and shall be measured in accordance with SSPC-PA 2.
   e) Curing shall be performed for 15 minutes at 400 ^{o} F, or by the manufacturer recommendation for an equivalent coating.

All work shall be performed in strict accordance with these specifications and the coating manufacturer's current printed instructions for the materials to be used on this project. Application shall be in accordance with the principles of good workmanship described in SSPC-PA 1, Paint Application Specification No. 1, Shop Field and Maintenance Painting.

The Quality Control/Specifications are as follows:

1) Dry Film test per ASTM D7378-07
2) Holiday Porosity Test per ASTM D5162-01
3) Cross Hatch Adhesion per ASTM D6677-01
4) Pencil Hardness test per ASTM D3363 (performed at Powder manufacturer also)
5) Impact Resistance per ASTM D2794 (performed at Powder manufacturer also)
6) Visual Gloss Inspection
7) Final Visual Inspection

F. Packaging

Each pole and luminaire shall be individually packaged to prevent damage with sufficient packaging strength for protection during shipping and storage. Small parts shall be packaged in boxes. Individual components shall be packaged in the same manner as the poles and luminaries. All handling shall be done with rope or nylon slings to prevent surface damage. Use of chains, wire slings or unprotected forks or hooks is prohibited. Packing list and assembly instruction sheet shall be included. After packaging is removed and prior to installation, each pole must be inspected for manufacturing or paint defects by the engineer. No pole is to be installed without the written authorization of the engineer.

G. Sealing of Streetlight Pole Foundation

The concrete for the foundation shall be finished so that the top surface is straight and smooth with a 2% grade conforming to the adjoining sidewalk.

Remove concrete forms on streetlight poles upon project completion. Remove all plywood, forms, excess and leftover concrete, and other debris as a result from construction upon project completion.

Once the pole is installed and leveled on the anchor bolts, the gap between the base of the pole and the top of the foundation shall be sealed using the following procedure.

The bottom surface of the pole base shall be primed using Pecora P-120 or approved equal and the top of the foundation shall be primed using a Pecora P-150 or approved equal. The curing of the concrete used for the foundation or pavement and the application of the primer shall follow the guidelines provided by the manufacturer of the primer and sealant.

The gap to be sealed shall be partially filled by pushing in a 1.5" diameter Bi-Cellular Backer Rod (SOF Rod), cut to size, and installed around the bottom perimeter of the pole base, pushed against the anchor bolts. The backer road product shall be made by Construction Foam Products or approved equal.

A one half-inch (1/2") inside diameter drain tube shall be placed in the gap between the base of the pole and its foundation to prevent standing water. The drain tube shall be placed under the backer rod, flush with the finished surface of the concrete, and extending about 2.25" toward the center of the pole base. It shall be placed so that it is following the downward slope of the surrounding sidewalk and top of foundation (about 2%). The drain tube shall be made of PVC with a wall thickness of 1/16" or as approved by the engineer.

Once the primer is dry as recommended by the manufacturer, and the backer rod is installed, the Contractor shall apply a silicone sealant, with a minimum thickness of 0.5inch. Use a pre-tinted black color silicone, model number Pecora 890NST or approved equal. Completely seal the gap between the base of the pole and the top of the foundation with the silicone making. Use a masking tape when applying the sealant, in order not to smear the outside of the pole, and the surrounding pavement with the sealant material. The sealant shall be smoothed out around the base of the pole, and any excess material removed before it is set to cure as required by the sealant manufacturer.

The sealant shall be smoothed out around the base of the pole, and any excess material removed before it is set to cure as required by the sealant manufacturer.

H. Warranty

All materials supplied shall be warranted by the manufacturer for a minimum warranty period of five (5) years from the date received at the city's facility. Entire pole and luminaire to be rated to withstand AASHTO requirements for a minimum 70 mile and hour wind load with a 30% gust factor. Manufacturer shall certify to the City that the accepted pole base, shaft, and luminaire is or will become a stock item, readily available with replacement parts for a minimum ten (10) year period.

I. Streetlight Style 1

1. Shaft

Shaft shall be provided with a uniform satin finish along the entire length of the pole. All materials shall be cleaned and free from dents and unsightly scratches. No surface preparation or painting of any type shall be required after final delivery. Shaft shall be fabricated from a minimum 0.188-inch wall thickness aluminum alloy conforming to 6063-T4. Shaft shall have no longitudinal or transverse joints or welds. Only one length of aluminum tubing shall be used, which shall be spun into a continuously tapered shaft, having a taper of 0.14 inches per foot (non-tapered is not acceptable).

After spinning, the tapered shaft shall be longitudinally cold rolled over a hardened steel mandrel under sufficient hydraulic pressure to form a 16-flute cross section. The shaft shall meet the chemical and physical properties of 6063-T4, having a minimum yield strength of 25,000 psi. The fluted shaft shall have sixteen (16) equally spaced Doric flutes, sharp and clear-cut throughout the entire length of the shaft. The radius of the flutes crest shall not exceed the thickness of the metal in the shaft. Individually rolled flutes or round poles with a separate fluted sheathing will not be acceptable.

Shaft shall be one-piece construction and shall be welded to the cast aluminum base by means of continuously welding the end of the shaft to the outside top of the ornamental base. The complete assembly shall be heat treated to a T6 temper.

Fluted shaft shall be approximately 6.7" x 5.3" x 10.5' long, as specified.

Fabricated aluminum tenon conforming to 6063-T4 alloy shall be welded to the top of the shaft. Tenon shall have a 3-inch outside diameter with 4 inches of exposed length and a minimum wall thickness of 0.25 inches. It shall be welded to the top of the shaft for mounting and shall be straight with no taper.

Shaft shall be formed true to the pattern and complete in detail. Contact with dissimilar materials shall meet the requirements of the most current edition of AASHTO. Shaft interior surface shall be smooth with no protrusions or scratches. Shaft shall be hollow and have a minimum 2-inch internal clearance extending its length to permit internal wiring from an underground source. Optional – Shaft shall have an outlet frame integrally welded into the top of the shaft with a 120 volt GFI duplex receptacle rated for outdoor use with weatherproof cover.

2. Pole Base

Base shall be cast aluminum alloy 356 per ASTM B26, or B108, and be of one-piece construction permanently mounted to the shaft. The base shall be heat-treated to a T6 temper. The base/shaft connection shall have a close tolerance fit in keeping with good welding practice. The shaft shall be joined to the base with a continuous weld at the outside top of the base.

Base shall conform to the requirements of AA-356-0.F aluminum. Base shall be one-piece construction with a removable access door. A wiring access hole shall be provided in the top of the base.

Base shall be approximately 18 inches high and 17 inches in diameter at the base bottom.

Base shall be furnished with a reinforced approximate 4" x 8" x 6" handhole opening and be complete with a 1/2 –inch – 13NC grounding provision, handhole cover and attaching hardware. Base shall have a minimum of four (4) reinforced slots cast into the bottom of the base to accept four (4) ¾-inch diameter minimum anchor bolts on a 12-inch bolt circle. Foundation surface must be level in order to accept the base assembly.

Handhole access shall have a minimum of 45 degrees swing for an 8-inch ratchet wrench on anchor bolts. Handhold cover shall be of like base material and color. If applicable, handhole cover retaining bar shall be minimum 1/4 –inch by 1-inch steel. The center of the plate shall have 6-inch minimum diameter hole for conduit and wire entry.

All hardware shall be tamper resistant stainless steel.

Base shall be hollow and have a minimum 2-inch internal clearance extending its length to permit internal wiring from an underground source.

Style I Pole

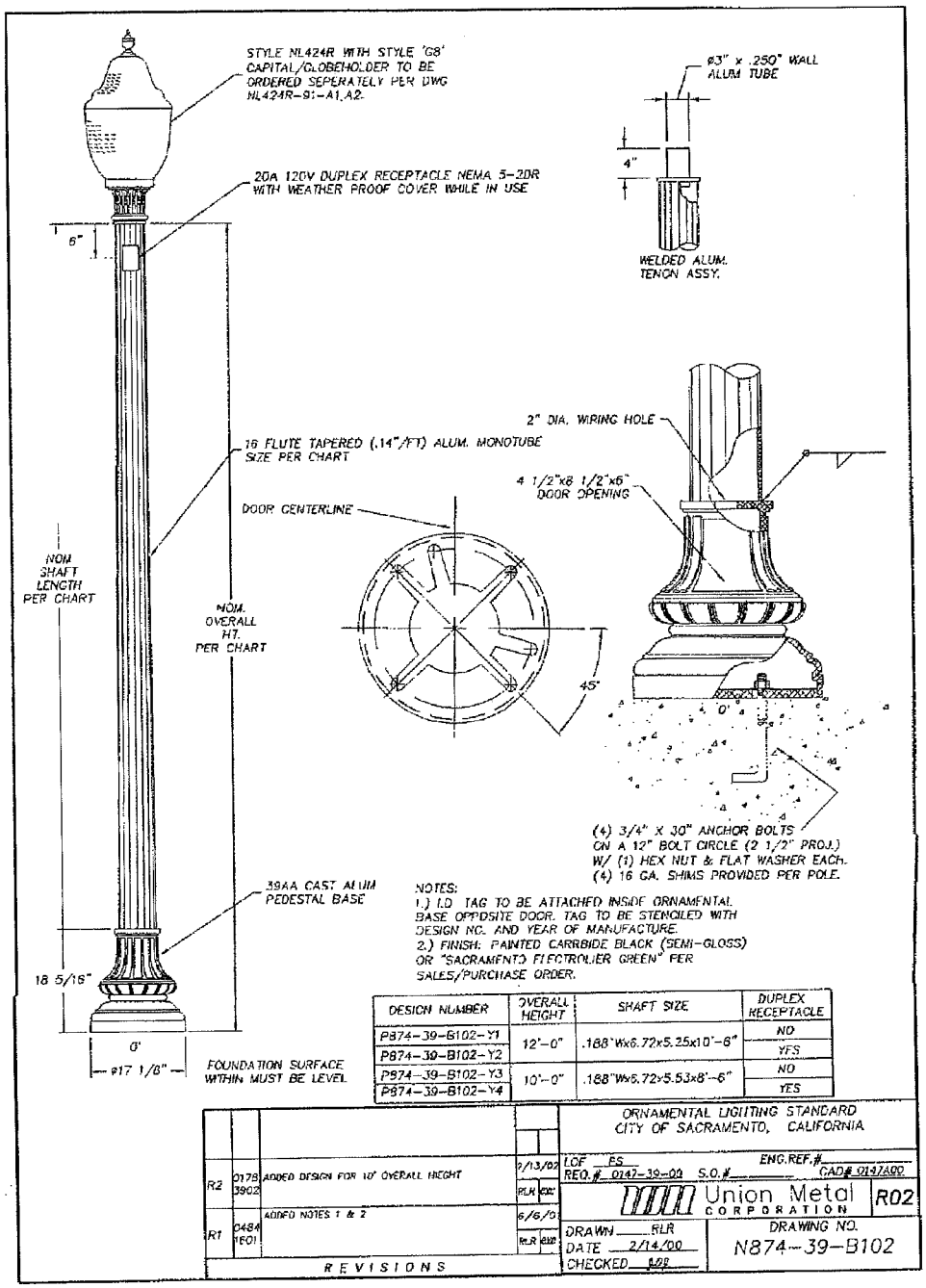
STYLE NL424R WITH STYLE 'G8' CAPITAL/GLOBEHOLDER TO BE ORDERED SEPERATELY PER DWG NL424R-91-A1,A2.
20A 120V DUPLEX RECEPTACLE NEMA 5-20R WITH WEATHER PROOF COVER WHILE IN USE
6"
16 FLUTE TAPERED (.14"/FT) ALUM. MONOTUBE SIZE PER CHART
NOM SHAFT LENGTH PER CHART
NOM. OVERALL HT. PER CHART
39AA CAST ALUM PEDESTAL BASE
18 5/16"
0'
ø17 1/8"
FOUNDATION SURFACE WITHIN MUST BE LEVEL
ø3" x .250" WALL ALUM TUBE
4"
WELDED ALUM. TENON ASSY.
2" DIA. WIRING HOLE
4 1/2"x8 1/2"x6" DOOR OPENING
DOOR CENTERLINE
45°
0'
(4) 3/4" X 30" ANCHOR BOLTS ON A 12" BOLT CIRCLE (2 1/2" PROJ.) W/ (1) HEX NUT & FLAT WASHER EACH. (4) 16 GA. SHIMS PROVIDED PER POLE.
NOTES:
1.) I.D TAG TO BE ATTACHED INSIDE ORNAMENTAL BASE OPPOSITE DOOR. TAG TO BE STENCILED WITH DESIGN NO. AND YEAR OF MANUFACTURE.
2.) FINISH: PAINTED CARRBIDE BLACK (SEMI-GLOSS) OR "SACRAMENTO ELECTROLIER GREEN" PER SALES/PURCHASE ORDER.
DESIGN NUMBER | OVERALL HEIGHT | SHAFT SIZE | DUPLEX RECEPTACLE
P874-39-B102-Y1 | 12'-0" | .188"Wx6.72x5.25x10'-6" | NO
P874-39-B102-Y2 | | | YES
P874-39-B102-Y3 | 10'-0" | .188"Wx6.72x5.53x8'-6" | NO
P874-39-B102-Y4 | | | YES
R2 | 0178 3902 | ADDED DESIGN FOR 10' OVERALL HEIGHT | 2/13/02 | RLR
R1 | 0484 1601 | ADDED NOTES 1 & 2 | 6/6/01 | RLR
REVISIONS
ORNAMENTAL LIGHTING STANDARD
CITY OF SACRAMENTO, CALIFORNIA
LOF FS
ENG.REF.#
REQ.# 0247-39-00 S.O.#
CAD# 0247A00
Union Metal CORPORATION
R02
DRAWN RLR
DATE 2/14/00
CHECKED
DRAWING NO.
N874-39-B102

11-9 PULL BOXES

Pull boxes shall be in accordance with Section 34-11 of the Standard Specifications, except for the following:

a. All new pull boxes shall be set in place prior to pouring any new sidewalk.
b. Existing pull boxes damaged by the installation of new conduits shall be removed and replaced at the Contractor's expense as directed by the Engineer.
c. All pull boxes shall be placed in sidewalk areas unless otherwise specified on the plans or directed by the Engineer, and shall not be placed in driveways, in vehicular traveled lanes, or in any part of the new sidewalk handicap ramp areas. Unless otherwise specified, pull boxes shall be placed a minimum of 5 feet from existing driveways.
d. Contractor shall cut, remove and replace the concrete to the nearest joint when installing new pull boxes.
e. New pull boxes shall have a minimum of 6" of new concrete around all sides in sidewalks.
f. For pull boxes to be removed, holes or depressions resulting from the removed pull box shall be filled, compacted, brought to grade, and filled to match surrounding materials.
g. Pull boxes shall be placed as shown according to the details shown on the Plans and according to these Special Provisions.
h. Install pull box on top of crushed rock foundation. Adjust pull box to grade. The crushed rock foundation shall have a minimum of 12" in depth and continue to extend a minimum of 6" beyond the outside edge of the pull box. Compact crushed rock while maintaining integrity of conduit. Conduit and pull boxes shall not be damaged nor cracked.
i. In instances where the pull box is installed in a planter box or dirt areas, the pull box shall be set to grade with a concrete ring, as shown in the standard detail drawings.
j. All No. 5 and No. 6 Pull Boxes shall have steel security lids with locking key bolt.

    1) Pull Box Lid shall be manufactured by LockLid Secure Utility Enclosure Lids manufactured by Jensen MetalTech or approved equal. (#5 PB - Locklid 1324 Lid LL K-S TrxPlt Sac Glv; #6 PB – LockLid 1730 Lid LL K-SD TrxPlt Sac Glv).
    2) Lid shall be ¼" thick minimum galvanized steel.
    3) Lid shall be manufactured with slip resistant surface.
    4) Lid shall be non-traffic rated, unless otherwise specified.
    5) Lid shall be equipped with a lock mechanism which can be secured from the top of lid.
    6) Lock shall be recessed in a1 inch diameter circle. Lock shall be a Secure Keyed Bryce Fastener, or approved equal.
    7) A steel welding plug shall be provided by the manufacturer to be inserted into the 1 inch diameter recessed lock. (Locklid # Plugs Sac Stl Plgs LkLd Lids, or approved equal).
    8) Lid shall be flush with top of pull box when the lid is completely secured and locked to the pull box.
    9) No. 5 pull boxes shall have a single cam locking system, or approved equal.
    10) No. 6 pull boxes shall have a double cam locking system, or approved equal.
    11) Lid shall have a grounding lug.

12) Supply five sets of keys for the locks.
13) Supply two sets of lifting tools for the lid.
14) Lid shall be free of scratches, defects, and debris. Lids shall be installed new.
15) SIPRA Corp Lockjaw Utility Box Security Lid is also an acceptable product. Galvanized lid. No electric markings on lid. 3/16" Diamond Plate. Provide three sets of locking tools for project.

11-10 WIRING

Wiring shall be in accordance with Section 34-13 of the Standard Specifications, except for the following:

a. After taping, all splices shall be painted with an approved electrical coating that will resist oil, acids, alkalies, and adverse environmental conditions.
b. Pull ropes used to pull conductors in conduit shall be a minimum of three-eighths inch (3/8") in diameter.

SECTION NO. 12 - CONTRACT PROVISIONS FOR FEDERAL-AID CONSTRUCTION CONTRACTS

FHWA Form 1273
Final Report of Utilization of Disadvantaged Businesses (Exhibit 17-E)
Disadvantaged Business Enterprises (DBE) Certification Status (Exhibit 17-O)

SECTION 12. FEDERAL REQUIREMENTS FOR FEDERAL-AID CONSTRUCTION PROJECTS

GENERAL.—The work herein proposed will be financed in whole or in part with Federal funds, and therefore all of the statutes, rules and regulations promulgated by the Federal Government and applicable to work financed in whole or in part with Federal funds will apply to such work. The "Required Contract Provisions, Federal-Aid Construction Contracts, "Form FHWA 1273, are included in this Section 14. Whenever in said required contract provisions references are made to "SHA contracting officer", "SHA resident engineer", or "authorized representative of the SHA", such references shall be construed to mean "Engineer" as defined in Section 1-1.18 of the Standard Specifications.

PERFORMANCE OF PREV IOUS CONTRACT.—In addition to the provisions in Section II, "Nondiscrimination," and Section VI, "Subletting or Assigning the Contract," of the required contract provisions, the Contractor shall comply with the following:

The bidder shall execute the CERTIFICATION WITH REGARD TO THE PERFORMANCE OF PREVIOUS CONTRACTS OR SUBCONTRACTS SUBJECT TO THE EQUAL OPPORTUNITY CLAUSE AND THE FILING OF REQUIRED REPORTS located in the proposal. No request for subletting or assigning any portion of the contract in excess of $10,000 will be considered under the provisions of Section VI of the required contract provisions unless such request is accompanied by the CERTIFICATION referred to above, executed by the proposed subcontractor.

NON-COLLUSION PROVISION.—The provisions in this section are applicable to all contracts except contracts for Federal Aid Secondary projects.

Title 23, United States Code, Section 112, requires as a condition precedent to approval by the Federal Highway Administrator of the contract for this work that each bidder file a sworn statement executed by, or on behalf of, the person, firm, association, or corporation to whom such contract is to be awarded, certifying that such person, firm, association, or corporation has not, either directly or indirectly, entered into any agreement, participated in any collusion, or otherwise taken any action in restraint of free competitive bidding in connection with the submitted bid. A form to make the non-collusion affidavit statement required by Section 112 as a certification under penalty of perjury rather than as a sworn statement as permitted by 28, USC, Sec. 1746, is included in the proposal.

PARTICIPATION BY MINORITY BU SINESS ENTERPRISES IN SUBCONTRACTING.—Part 26, Title 49, Code of Federal Regulations applies to this Federal-aid project. Pertinent sections of said Code are incorporated in part or in its entirety within other sections of these special provisions.

Schedule B—Information for Determining Joint Venture Eligibility

(This form need not be filled in if all joint venture firms are minority owned.)

1. Name of joint venture _____

_____

2. Address of joint venture _____

_____

3. Phone number of joint venture _____

_____

4. Identify the firms, which comprise the joint venture. (The MBE partner must complete Schedule A.) _____

_____

a. Describe the role of the MBE firm in the joint venture.

_____

_____

b. Describe very briefly the experience and business qualifications of each non-MBE joint venturer: _____

_____

5. Nature of the joint venture's business _____

_____

6. Provide a copy of the joint venture agreement.

7. What is the claimed percentage of MBE ownership? ___

_____

8. Ownership of joint venture: (This need not be filled in if described in the joint venture agreement, provided by question 6.).

a. Profit and loss sharing.
b. Capital contributions, including equipment.
c. Other applicable ownership interests.

9. Control of and participation in this contract. Identify by name, race, sex, and "firm" those individuals (and their titles) who are responsible for day-to-day management and policy decision-making, including, but not limited to, those with prime responsibility for:

a. Financial decisions _____

_____

b. Management decisions, such as:

1. Estimating _____

_____

2. Marketing and sales _____

_____

3. Hiring and firing of management personnel ___

_____

4. Purchasing of major items or supplies _____

_____

c. Supervision of field operations _____

_____

Note.—If, after filing this Schedule B and before the completion of the joint venture's work on the contract covered by this regulation, there is any significant change in the information submitted, the joint venture must inform the grantee, either directly or through the prime contractor if the joint venture is a subcontractor.

Affidavit

"The undersigned swear that the foregoing statements are correct and include all material information necessary to identify and explain the terms and operation of our joint venture and the intended participation by each joint venturer in the undertaking. Further, the undersigned covenant and agree to provide to grantee current, complete and accurate information regarding actual joint venture work and the payment therefore and any proposed changes in any of the joint venture arrangements and to permit the audit and examination of the books, records and files of the joint venture, or those of each joint venturer relevant to the joint venture, by authorized representatives of the grantee or the Federal funding agency. Any material misrepresentation will be grounds for terminating any contract which may be awarded and for initiating action under Federal or State laws concerning false statements."

Name of Firm	Name of Firm
Signature	Signature
Name	Name
Title	Title
Date	Date

Date _____

State of _____

County of _____

On this ____ day of _____, 19 __, before me appeared (Name) _____, to me personally known, who, being duly sworn, did execute the foregoing affidavit, and did state that he or she was properly authorized by (Name of firm) _____ to execute the affidavit and did so as his or her free act and deed.

Notary Public _____

Commission expires _____

[Seal]

Date _____

State of _____

County of _____

On this ___ day of _____, 19 __, before me appeared (Name) _____ to me personally known, who, being duly sworn, did execute the foregoing affidavit, and did state that he or she was properly authorized by (Name of firm) _____ to execute the affidavit and did so as his or her free act and deed.

Notary Public _____

Commission expires _____

[Seal]

REQUIRED CONTRACT PROVISIONS
FEDERAL-AID CONSTRUCTION CONTRACTS

I. General
II. Nondiscrimination
III. Nonsegregated Facilities
IV. Davis-Bacon and Related Act Provisions
V. Contract Work Hours and Safety Standards Act Provisions
VI. Subletting or Assigning the Contract
VII. Safety: Accident Prevention
VIII. False Statements Concerning Highway Projects
IX. Implementation of Clean Air Act and Federal Water Pollution Control Act
X. Compliance with Governmentwide Suspension and Debarment Requirements
XI. Certification Regarding Use of Contract Funds for Lobbying

ATTACHMENTS

A. Employment and Materials Preference for Appalachian Development Highway System or Appalachian Local Access Road Contracts (included in Appalachian contracts only)

I. GENERAL

1. Form FHWA-1273 must be physically incorporated in each construction contract funded under Title 23 (excluding emergency contracts solely intended for debris removal). The contractor (or subcontractor) must insert this form in each subcontract and further require its inclusion in all lower tier subcontracts (excluding purchase orders, rental agreements and other agreements for supplies or services).

The applicable requirements of Form FHWA-1273 are incorporated by reference for work done under any purchase order, rental agreement or agreement for other services. The prime contractor shall be responsible for compliance by any subcontractor, lower-tier subcontractor or service provider.

Form FHWA-1273 must be included in all Federal-aid design-build contracts, in all subcontracts and in lower tier subcontracts (excluding subcontracts for design services, purchase orders, rental agreements and other agreements for supplies or services). The design-builder shall be responsible for compliance by any subcontractor, lower-tier subcontractor or service provider.

Contracting agencies may reference Form FHWA-1273 in bid proposal or request for proposal documents, however, the Form FHWA-1273 must be physically incorporated (not referenced) in all contracts, subcontracts and lower-tier subcontracts (excluding purchase orders, rental agreements and other agreements for supplies or services related to a construction contract).

2. Subject to the applicability criteria noted in the following sections, these contract provisions shall apply to all work performed on the contract by the contractor's own organization and with the assistance of workers under the contractor's immediate superintendence and to all work performed on the contract by piecework, station work, or by subcontract.

3. A breach of any of the stipulations contained in these Required Contract Provisions may be sufficient grounds for withholding of progress payments, withholding of final payment, termination of the contract, suspension / debarment or any other action determined to be appropriate by the contracting agency and FHWA.

4. Selection of Labor: During the performance of this contract, the contractor shall not use convict labor for any purpose within the limits of a construction project on a Federal-aid highway unless it is labor performed by convicts who are on parole, supervised release, or probation. The term Federal-aid highway does not include roadways functionally classified as local roads or rural minor collectors.

II. NONDISCRIMINATION

The provisions of this section related to 23 CFR Part 230 are applicable to all Federal-aid construction contracts and to all related construction subcontracts of $10,000 or more. The provisions of 23 CFR Part 230 are not applicable to material supply, engineering, or architectural service contracts.

In addition, the contractor and all subcontractors must comply with the following policies: Executive Order 11246, 41 CFR 60, 29 CFR 1625-1627, Title 23 USC Section 140, the Rehabilitation Act of 1973, as amended (29 USC 794), Title VI of the Civil Rights Act of 1964, as amended, and related regulations including 49 CFR Parts 21, 26 and 27; and 23 CFR Parts 200, 230, and 633.

The contractor and all subcontractors must comply with: the requirements of the Equal Opportunity Clause in 41 CFR 60-1.4(b) and, for all construction contracts exceeding $10,000, the Standard Federal Equal Employment Opportunity Construction Contract Specifications in 41 CFR 60-4.3.

Note: The U.S. Department of Labor has exclusive authority to determine compliance with Executive Order 11246 and the policies of the Secretary of Labor including 41 CFR 60, and 29 CFR 1625-1627. The contracting agency and the FHWA have the authority and the responsibility to ensure compliance with Title 23 USC Section 140, the Rehabilitation Act of 1973, as amended (29 USC 794), and Title VI of the Civil Rights Act of 1964, as amended, and related regulations including 49 CFR Parts 21, 26 and 27; and 23 CFR Parts 200, 230, and 633.

The following provision is adopted from 23 CFR 230, Appendix A, with appropriate revisions to conform to the U.S. Department of Labor (US DOL) and FHWA requirements.

1. Equal Employment Opportunity: Equal employment opportunity (EEO) requirements not to discriminate and to take affirmative action to assure equal opportunity as set forth under laws, executive orders, rules, regulations (28 CFR 35, 29 CFR 1630, 29 CFR 1625-1627, 41 CFR 60 and 49 CFR 27) and orders of the Secretary of Labor as modified by the provisions prescribed herein, and imposed pursuant to 23 U.S.C. 140 shall constitute the EEO and specific affirmative action standards for the contractor's project activities under

this contract. The provisions of the Americans with Disabilities Act of 1990 (42 U.S.C. 12101 et seq.) set forth under 28 CFR 35 and 29 CFR 1630 are incorporated by reference in this contract. In the execution of this contract, the contractor agrees to comply with the following minimum specific requirement activities of EEO:

a. The contractor will work with the contracting agency and the Federal Government to ensure that it has made every good faith effort to provide equal opportunity with respect to all of its terms and conditions of employment and in their review of activities under the contract.

b. The contractor will accept as its operating policy the following statement:

"It is the policy of this Company to assure that applicants are employed, and that employees are treated during employment, without regard to their race, religion, sex, color, national origin, age or disability. Such action shall include: employment, upgrading, demotion, or transfer; recruitment or recruitment advertising; layoff or termination; rates of pay or other forms of compensation; and selection for training, including apprenticeship, pre-apprenticeship, and/or on-the-job training."

2. EEO Officer: The contractor will designate and make known to the contracting officers an EEO Officer who will have the responsibility for and must be capable of effectively administering and promoting an active EEO program and who must be assigned adequate authority and responsibility to do so.

3. Dissemination of Policy: All members of the contractor's staff who are authorized to hire, supervise, promote, and discharge employees, or who recommend such action, or who are substantially involved in such action, will be made fully cognizant of, and will implement, the contractor's EEO policy and contractual responsibilities to provide EEO in each grade and classification of employment. To ensure that the above agreement will be met, the following actions will be taken as a minimum:

a. Periodic meetings of supervisory and personnel office employees will be conducted before the start of work and then not less often than once every six months, at which time the contractor's EEO policy and its implementation will be reviewed and explained. The meetings will be conducted by the EEO Officer.

b. All new supervisory or personnel office employees will be given a thorough indoctrination by the EEO Officer, covering all major aspects of the contractor's EEO obligations within thirty days following their reporting for duty with the contractor.

c. All personnel who are engaged in direct recruitment for the project will be instructed by the EEO Officer in the contractor's procedures for locating and hiring minorities and women.

d. Notices and posters setting forth the contractor's EEO policy will be placed in areas readily accessible to employees, applicants for employment and potential employees.

e. The contractor's EEO policy and the procedures to implement such policy will be brought to the attention of employees by means of meetings, employee handbooks, or other appropriate means.

4. Recruitment: When advertising for employees, the contractor will include in all advertisements for employees the notation: "An Equal Opportunity Employer." All such advertisements will be placed in publications having a large circulation among minorities and women in the area from which the project work force would normally be derived.

a. The contractor will, unless precluded by a valid bargaining agreement, conduct systematic and direct recruitment through public and private employee referral sources likely to yield qualified minorities and women. To meet this requirement, the contractor will identify sources of potential minority group employees, and establish with such identified sources procedures whereby minority and women applicants may be referred to the contractor for employment consideration.

b. In the event the contractor has a valid bargaining agreement providing for exclusive hiring hall referrals, the contractor is expected to observe the provisions of that agreement to the extent that the system meets the contractor's compliance with EEO contract provisions. Where implementation of such an agreement has the effect of discriminating against minorities or women, or obligates the contractor to do the same, such implementation violates Federal nondiscrimination provisions.

c. The contractor will encourage its present employees to refer minorities and women as applicants for employment. Information and procedures with regard to referring such applicants will be discussed with employees.

5. Personnel Actions: Wages, working conditions, and employee benefits shall be established and administered, and personnel actions of every type, including hiring, upgrading, promotion, transfer, demotion, layoff, and termination, shall be taken without regard to race, color, religion, sex, national origin, age or disability. The following procedures shall be followed:

a. The contractor will conduct periodic inspections of project sites to insure that working conditions and employee facilities do not indicate discriminatory treatment of project site personnel.

b. The contractor will periodically evaluate the spread of wages paid within each classification to determine any evidence of discriminatory wage practices.

c. The contractor will periodically review selected personnel actions in depth to determine whether there is evidence of discrimination. Where evidence is found, the contractor will promptly take corrective action. If the review indicates that the discrimination may extend beyond the actions reviewed, such corrective action shall include all affected persons.

d. The contractor will promptly investigate all complaints of alleged discrimination made to the contractor in connection with its obligations under this contract, will attempt to resolve such complaints, and will take appropriate corrective action within a reasonable time. If the investigation indicates that the discrimination may affect persons other than the complainant, such corrective action shall include such other persons. Upon completion of each investigation, the contractor will inform every complainant of all of their avenues of appeal.

6. Training and Promotion:

a. The contractor will assist in locating, qualifying, and increasing the skills of minorities and women who are

applicants for employment or current employees. Such efforts should be aimed at developing full journey level status employees in the type of trade or job classification involved.

b. Consistent with the contractor's work force requirements and as permissible under Federal and State regulations, the contractor shall make full use of training programs, i.e., apprenticeship, and on-the-job training programs for the geographical area of contract performance. In the event a special provision for training is provided under this contract, this subparagraph will be superseded as indicated in the special provision. The contracting agency may reserve training positions for persons who receive welfare assistance in accordance with 23 U.S.C. 140(a).

c. The contractor will advise employees and applicants for employment of available training programs and entrance requirements for each.

d. The contractor will periodically review the training and promotion potential of employees who are minorities and women and will encourage eligible employees to apply for such training and promotion.

7. Unions: If the contractor relies in whole or in part upon unions as a source of employees, the contractor will use good faith efforts to obtain the cooperation of such unions to increase opportunities for minorities and women. Actions by the contractor, either directly or through a contractor's association acting as agent, will include the procedures set forth below:

a. The contractor will use good faith efforts to develop, in cooperation with the unions, joint training programs aimed toward qualifying more minorities and women for membership in the unions and increasing the skills of minorities and women so that they may qualify for higher paying employment.

b. The contractor will use good faith efforts to incorporate an EEO clause into each union agreement to the end that such union will be contractually bound to refer applicants without regard to their race, color, religion, sex, national origin, age or disability.

c. The contractor is to obtain information as to the referral practices and policies of the labor union except that to the extent such information is within the exclusive possession of the labor union and such labor union refuses to furnish such information to the contractor, the contractor shall so certify to the contracting agency and shall set forth what efforts have been made to obtain such information.

d. In the event the union is unable to provide the contractor with a reasonable flow of referrals within the time limit set forth in the collective bargaining agreement, the contractor will, through independent recruitment efforts, fill the employment vacancies without regard to race, color, religion, sex, national origin, age or disability; making full efforts to obtain qualified and/or qualifiable minorities and women. The failure of a union to provide sufficient referrals (even though it is obligated to provide exclusive referrals under the terms of a collective bargaining agreement) does not relieve the contractor from the requirements of this paragraph. In the event the union referral practice prevents the contractor from meeting the obligations pursuant to Executive Order 11246, as amended, and these special provisions, such contractor shall immediately notify the contracting agency.

8. Reasonable Accommodation for Applicants / Employees with Disabilities: The contractor must be familiar with the requirements for and comply with the Americans with Disabilities Act and all rules and regulations established there under. Employers must provide reasonable accommodation in all employment activities unless to do so would cause an undue hardship.

9. Selection of Subcontractors, Procurement of Materials and Leasing of Equipment: The contractor shall not discriminate on the grounds of race, color, religion, sex, national origin, age or disability in the selection and retention of subcontractors, including procurement of materials and leases of equipment. The contractor shall take all necessary and reasonable steps to ensure nondiscrimination in the administration of this contract.

a. The contractor shall notify all potential subcontractors and suppliers and lessors of their EEO obligations under this contract.

b. The contractor will use good faith efforts to ensure subcontractor compliance with their EEO obligations.

10. Assurance Required by 49 CFR 26.13(b):

a. The requirements of 49 CFR Part 26 and the State DOT's U.S. DOT-approved DBE program are incorporated by reference.

b. The contractor or subcontractor shall not discriminate on the basis of race, color, national origin, or sex in the performance of this contract. The contractor shall carry out applicable requirements of 49 CFR Part 26 in the award and administration of DOT-assisted contracts. Failure by the contractor to carry out these requirements is a material breach of this contract, which may result in the termination of this contract or such other remedy as the contracting agency deems appropriate.

11. Records and Reports: The contractor shall keep such records as necessary to document compliance with the EEO requirements. Such records shall be retained for a period of three years following the date of the final payment to the contractor for all contract work and shall be available at reasonable times and places for inspection by authorized representatives of the contracting agency and the FHWA.

a. The records kept by the contractor shall document the following:

(1) The number and work hours of minority and non-minority group members and women employed in each work classification on the project;

(2) The progress and efforts being made in cooperation with unions, when applicable, to increase employment opportunities for minorities and women; and

(3) The progress and efforts being made in locating, hiring, training, qualifying, and upgrading minorities and women;

b. The contractors and subcontractors will submit an annual report to the contracting agency each July for the duration of the project, indicating the number of minority, women, and non-minority group employees currently engaged in each work classification required by the contract work. This information is to be reported on Form FHWA-1391. The staffing data should represent the project work force on board in all or any part of the last payroll period preceding the end of July. If on-the-job training is being required by special provision, the contractor

will be required to collect and report training data. The employment data should reflect the work force on board during all or any part of the last payroll period preceding the end of July.

III. NONSEGREGATED FACILITIES

This provision is applicable to all Federal-aid construction contracts and to all related construction subcontracts of $10,000 or more.

The contractor must ensure that facilities provided for employees are provided in such a manner that segregation on the basis of race, color, religion, sex, or national origin cannot result. The contractor may neither require such segregated use by written or oral policies nor tolerate such use by employee custom. The contractor's obligation extends further to ensure that its employees are not assigned to perform their services at any location, under the contractor's control, where the facilities are segregated. The term "facilities" includes waiting rooms, work areas, restaurants and other eating areas, time clocks, restrooms, washrooms, locker rooms, and other storage or dressing areas, parking lots, drinking fountains, recreation or entertainment areas, transportation, and housing provided for employees. The contractor shall provide separate or single-user restrooms and necessary dressing or sleeping areas to assure privacy between sexes.

IV. DAVIS-BACON AND RELATED ACT PROVISIONS

This section is applicable to all Federal-aid construction projects exceeding $2,000 and to all related subcontracts and lower-tier subcontracts (regardless of subcontract size). The requirements apply to all projects located within the right-of-way of a roadway that is functionally classified as Federal-aid highway. This excludes roadways functionally classified as local roads or rural minor collectors, which are exempt. Contracting agencies may elect to apply these requirements to other projects.

The following provisions are from the U.S. Department of Labor regulations in 29 CFR 5.5 "Contract provisions and related matters" with minor revisions to conform to the FHWA-1273 format and FHWA program requirements.

1. Minimum wages

a. All laborers and mechanics employed or working upon the site of the work, will be paid unconditionally and not less often than once a week, and without subsequent deduction or rebate on any account (except such payroll deductions as are permitted by regulations issued by the Secretary of Labor under the Copeland Act (29 CFR part 3)), the full amount of wages and bona fide fringe benefits (or cash equivalents thereof) due at time of payment computed at rates not less than those contained in the wage determination of the Secretary of Labor which is attached hereto and made a part hereof, regardless of any contractual relationship which may be alleged to exist between the contractor and such laborers and mechanics.

Contributions made or costs reasonably anticipated for bona fide fringe benefits under section 1(b)(2) of the Davis-Bacon Act on behalf of laborers or mechanics are considered wages paid to such laborers or mechanics, subject to the provisions of paragraph 1.d. of this section; also, regular contributions made or costs incurred for more than a weekly period (but not less often than quarterly) under plans, funds, or programs which cover the particular weekly period, are deemed to be constructively made or incurred during such weekly period. Such laborers and mechanics shall be paid the appropriate wage rate and fringe benefits on the wage determination for the classification of work actually performed, without regard to skill, except as provided in 29 CFR 5.5(a)(4). Laborers or mechanics performing work in more than one classification may be compensated at the rate specified for each classification for the time actually worked therein: Provided, That the employer's payroll records accurately set forth the time spent in each classification in which work is performed. The wage determination (including any additional classification and wage rates conformed under paragraph 1.b. of this section) and the Davis-Bacon poster (WH–1321) shall be posted at all times by the contractor and its subcontractors at the site of the work in a prominent and accessible place where it can be easily seen by the workers.

b.(1) The contracting officer shall require that any class of laborers or mechanics, including helpers, which is not listed in the wage determination and which is to be employed under the contract shall be classified in conformance with the wage determination. The contracting officer shall approve an additional classification and wage rate and fringe benefits therefore only when the following criteria have been met:

(i) The work to be performed by the classification requested is not performed by a classification in the wage determination; and

(ii) The classification is utilized in the area by the construction industry; and

(iii) The proposed wage rate, including any bona fide fringe benefits, bears a reasonable relationship to the wage rates contained in the wage determination.

(2) If the contractor and the laborers and mechanics to be employed in the classification (if known), or their representatives, and the contracting officer agree on the classification and wage rate (including the amount designated for fringe benefits where appropriate), a report of the action taken shall be sent by the contracting officer to the Administrator of the Wage and Hour Division, Employment Standards Administration, U.S. Department of Labor, Washington, DC 20210. The Administrator, or an authorized representative, will approve, modify, or disapprove every additional classification action within 30 days of receipt and so advise the contracting officer or will notify the contracting officer within the 30-day period that additional time is necessary.

(3) In the event the contractor, the laborers or mechanics to be employed in the classification or their representatives, and the contracting officer do not agree on the proposed classification and wage rate (including the amount designated for fringe benefits, where appropriate), the contracting officer shall refer the questions, including the views of all interested parties and the recommendation of the contracting officer, to the Wage and Hour Administrator for determination. The Wage and Hour Administrator, or an authorized representative, will issue a determination within 30 days of receipt and so advise the contracting officer or

will notify the contracting officer within the 30-day period that additional time is necessary.

(4) The wage rate (including fringe benefits where appropriate) determined pursuant to paragraphs 1.b.(2) or 1.b.(3) of this section, shall be paid to all workers performing work in the classification under this contract from the first day on which work is performed in the classification.

c. Whenever the minimum wage rate prescribed in the contract for a class of laborers or mechanics includes a fringe benefit which is not expressed as an hourly rate, the contractor shall either pay the benefit as stated in the wage determination or shall pay another bona fide fringe benefit or an hourly cash equivalent thereof.

d. If the contractor does not make payments to a trustee or other third person, the contractor may consider as part of the wages of any laborer or mechanic the amount of any costs reasonably anticipated in providing bona fide fringe benefits under a plan or program, Provided, That the Secretary of Labor has found, upon the written request of the contractor, that the applicable standards of the Davis-Bacon Act have been met. The Secretary of Labor may require the contractor to set aside in a separate account assets for the meeting of obligations under the plan or program.

2. Withholding

The contracting agency shall upon its own action or upon written request of an authorized representative of the Department of Labor, withhold or cause to be withheld from the contractor under this contract, or any other Federal contract with the same prime contractor, or any other federally-assisted contract subject to Davis-Bacon prevailing wage requirements, which is held by the same prime contractor, so much of the accrued payments or advances as may be considered necessary to pay laborers and mechanics, including apprentices, trainees, and helpers, employed by the contractor or any subcontractor the full amount of wages required by the contract. In the event of failure to pay any laborer or mechanic, including any apprentice, trainee, or helper, employed or working on the site of the work, all or part of the wages required by the contract, the contracting agency may, after written notice to the contractor, take such action as may be necessary to cause the suspension of any further payment, advance, or guarantee of funds until such violations have ceased.

3. Payrolls and basic records

a. Payrolls and basic records relating thereto shall be maintained by the contractor during the course of the work and preserved for a period of three years thereafter for all laborers and mechanics working at the site of the work. Such records shall contain the name, address, and social security number of each such worker, his or her correct classification, hourly rates of wages paid (including rates of contributions or costs anticipated for bona fide fringe benefits or cash equivalents thereof of the types described in section 1(b)(2)(B) of the Davis-Bacon Act), daily and weekly number of hours worked, deductions made and actual wages paid. Whenever the Secretary of Labor has found under 29 CFR 5.5(a)(1)(iv) that the wages of any laborer or mechanic include the amount of any costs reasonably anticipated in providing benefits under a plan or program described in section 1(b)(2)(B) of the Davis-Bacon Act, the contractor shall maintain records which show that the commitment to provide such benefits is enforceable, that the plan or program is financially responsible, and that the plan or program has been communicated in writing to the laborers or mechanics affected, and records which show the costs anticipated or the actual cost incurred in providing such benefits. Contractors employing apprentices or trainees under approved programs shall maintain written evidence of the registration of apprenticeship programs and certification of trainee programs, the registration of the apprentices and trainees, and the ratios and wage rates prescribed in the applicable programs.

b.(1) The contractor shall submit weekly for each week in which any contract work is performed a copy of all payrolls to the contracting agency. The payrolls submitted shall set out accurately and completely all of the information required to be maintained under 29 CFR 5.5(a)(3)(i), except that full social security numbers and home addresses shall not be included on weekly transmittals. Instead the payrolls shall only need to include an individually identifying number for each employee (e.g. , the last four digits of the employee's social security number). The required weekly payroll information may be submitted in any form desired. Optional Form WH–347 is available for this purpose from the Wage and Hour Division Web site at http://www.dol.gov/esa/whd/forms/wh347instr.htm or its successor site. The prime contractor is responsible for the submission of copies of payrolls by all subcontractors. Contractors and subcontractors shall maintain the full social security number and current address of each covered worker, and shall provide them upon request to the contracting agency for transmission to the State DOT, the FHWA or the Wage and Hour Division of the Department of Labor for purposes of an investigation or audit of compliance with prevailing wage requirements. It is not a violation of this section for a prime contractor to require a subcontractor to provide addresses and social security numbers to the prime contractor for its own records, without weekly submission to the contracting agency..

(2) Each payroll submitted shall be accompanied by a "Statement of Compliance," signed by the contractor or subcontractor or his or her agent who pays or supervises the payment of the persons employed under the contract and shall certify the following:

(i) That the payroll for the payroll period contains the information required to be provided under §5.5 (a)(3)(ii) of Regulations, 29 CFR part 5, the appropriate information is being maintained under §5.5 (a)(3)(i) of Regulations, 29 CFR part 5, and that such information is correct and complete;

(ii) That each laborer or mechanic (including each helper, apprentice, and trainee) employed on the contract during the payroll period has been paid the full weekly wages earned, without rebate, either directly or indirectly, and that no deductions have been made either directly or indirectly from the full wages earned, other than permissible deductions as set forth in Regulations, 29 CFR part 3;

(iii) That each laborer or mechanic has been paid not less than the applicable wage rates and fringe benefits or cash equivalents for the classification of work performed, as specified in the applicable wage determination incorporated into the contract.

(3) The weekly submission of a properly executed certification set forth on the reverse side of Optional Form WH–347 shall satisfy the requirement for submission of the "Statement of Compliance" required by paragraph 3.b.(2) of this section.

(4) The falsification of any of the above certifications may subject the contractor or subcontractor to civil or criminal prosecution under section 1001 of title 18 and section 231 of title 31 of the United States Code.

c. The contractor or subcontractor shall make the records required under paragraph 3.a. of this section available for inspection, copying, or transcription by authorized representatives of the contracting agency, the State DOT, the FHWA, or the Department of Labor, and shall permit such representatives to interview employees during working hours on the job. If the contractor or subcontractor fails to submit the required records or to make them available, the FHWA may, after written notice to the contractor, the contracting agency or the State DOT, take such action as may be necessary to cause the suspension of any further payment, advance, or guarantee of funds. Furthermore, failure to submit the required records upon request or to make such records available may be grounds for debarment action pursuant to 29 CFR 5.12.

4. Apprentices and trainees

a. Apprentices (programs of the USDOL).

Apprentices will be permitted to work at less than the predetermined rate for the work they performed when they are employed pursuant to and individually registered in a bona fide apprenticeship program registered with the U.S. Department of Labor, Employment and Training Administration, Office of Apprenticeship Training, Employer and Labor Services, or with a State Apprenticeship Agency recognized by the Office, or if a person is employed in his or her first 90 days of probationary employment as an apprentice in such an apprenticeship program, who is not individually registered in the program, but who has been certified by the Office of Apprenticeship Training, Employer and Labor Services or a State Apprenticeship Agency (where appropriate) to be eligible for probationary employment as an apprentice.

The allowable ratio of apprentices to journeymen on the job site in any craft classification shall not be greater than the ratio permitted to the contractor as to the entire work force under the registered program. Any worker listed on a payroll at an apprentice wage rate, who is not registered or otherwise employed as stated above, shall be paid not less than the applicable wage rate on the wage determination for the classification of work actually performed. In addition, any apprentice performing work on the job site in excess of the ratio permitted under the registered program shall be paid not less than the applicable wage rate on the wage determination for the work actually performed. Where a contractor is performing construction on a project in a locality other than that in which its program is registered, the ratios and wage rates (expressed in percentages of the journeyman's hourly rate) specified in the contractor's or subcontractor's registered program shall be observed.

Every apprentice must be paid at not less than the rate specified in the registered program for the apprentice's level of progress, expressed as a percentage of the journeymen hourly rate specified in the applicable wage determination. Apprentices shall be paid fringe benefits in accordance with the provisions of the apprenticeship program. If the apprenticeship program does not specify fringe benefits, apprentices must be paid the full amount of fringe benefits listed on the wage determination for the applicable classification. If the Administrator determines that a different practice prevails for the applicable apprentice classification, fringes shall be paid in accordance with that determination.

In the event the Office of Apprenticeship Training, Employer and Labor Services, or a State Apprenticeship Agency recognized by the Office, withdraws approval of an apprenticeship program, the contractor will no longer be permitted to utilize apprentices at less than the applicable predetermined rate for the work performed until an acceptable program is approved.

b. Trainees (programs of the USDOL).

Except as provided in 29 CFR 5.16, trainees will not be permitted to work at less than the predetermined rate for the work performed unless they are employed pursuant to and individually registered in a program which has received prior approval, evidenced by formal certification by the U.S. Department of Labor, Employment and Training Administration.

The ratio of trainees to journeymen on the job site shall not be greater than permitted under the plan approved by the Employment and Training Administration.

Every trainee must be paid at not less than the rate specified in the approved program for the trainee's level of progress, expressed as a percentage of the journeyman hourly rate specified in the applicable wage determination. Trainees shall be paid fringe benefits in accordance with the provisions of the trainee program. If the trainee program does not mention fringe benefits, trainees shall be paid the full amount of fringe benefits listed on the wage determination unless the Administrator of the Wage and Hour Division determines that there is an apprenticeship program associated with the corresponding journeyman wage rate on the wage determination which provides for less than full fringe benefits for apprentices. Any employee listed on the payroll at a trainee rate who is not registered and participating in a training plan approved by the Employment and Training Administration shall be paid not less than the applicable wage rate on the wage determination for the classification of work actually performed. In addition, any trainee performing work on the job site in excess of the ratio permitted under the registered program shall be paid not less than the applicable wage rate on the wage determination for the work actually performed.

In the event the Employment and Training Administration withdraws approval of a training program, the contractor will no longer be permitted to utilize trainees at less than the applicable predetermined rate for the work performed until an acceptable program is approved.

c. Equal employment opportunity. The utilization of apprentices, trainees and journeymen under this part shall be in conformity with the equal employment opportunity requirements of Executive Order 11246, as amended, and 29 CFR part 30.

d. Apprentices and Trainees (programs of the U.S. DOT).

Apprentices and trainees working under apprenticeship and skill training programs which have been certified by the Secretary of Transportation as promoting EEO in connection with Federal-aid highway construction programs are not subject to the requirements of paragraph 4 of this Section IV. The straight time hourly wage rates for apprentices and trainees under such programs will be established by the particular programs. The ratio of apprentices and trainees to journeymen shall not be greater than permitted by the terms of the particular program.

5. Compliance with Copeland Act requirements. The contractor shall comply with the requirements of 29 CFR part 3, which are incorporated by reference in this contract.

6. Subcontracts. The contractor or subcontractor shall insert Form FHWA-1273 in any subcontracts and also require the subcontractors to include Form FHWA-1273 in any lower tier subcontracts. The prime contractor shall be responsible for the compliance by any subcontractor or lower tier subcontractor with all the contract clauses in 29 CFR 5.5.

7. Contract termination: debarment. A breach of the contract clauses in 29 CFR 5.5 may be grounds for termination of the contract, and for debarment as a contractor and a subcontractor as provided in 29 CFR 5.12.

8. Compliance with Davis-Bacon and Related Act requirements. All rulings and interpretations of the Davis-Bacon and Related Acts contained in 29 CFR parts 1, 3, and 5 are herein incorporated by reference in this contract.

9. Disputes concerning labor standards. Disputes arising out of the labor standards provisions of this contract shall not be subject to the general disputes clause of this contract. Such disputes shall be resolved in accordance with the procedures of the Department of Labor set forth in 29 CFR parts 5, 6, and 7. Disputes within the meaning of this clause include disputes between the contractor (or any of its subcontractors) and the contracting agency, the U.S. Department of Labor, or the employees or their representatives.

10. Certification of eligibility.

a. By entering into this contract, the contractor certifies that neither it (nor he or she) nor any person or firm who has an interest in the contractor's firm is a person or firm ineligible to be awarded Government contracts by virtue of section 3(a) of the Davis-Bacon Act or 29 CFR 5.12(a)(1).

b. No part of this contract shall be subcontracted to any person or firm ineligible for award of a Government contract by virtue of section 3(a) of the Davis-Bacon Act or 29 CFR 5.12(a)(1).

c. The penalty for making false statements is prescribed in the U.S. Criminal Code, 18 U.S.C. 1001.

V. CONTRACT WORK HOURS AND SAFETY STANDARDS ACT

The following clauses apply to any Federal-aid construction contract in an amount in excess of $100,000 and subject to the overtime provisions of the Contract Work Hours and Safety Standards Act. These clauses shall be inserted in addition to the clauses required by 29 CFR 5.5(a) or 29 CFR 4.6. As used in this paragraph, the terms laborers and mechanics include watchmen and guards.

1. Overtime requirements. No contractor or subcontractor contracting for any part of the contract work which may require or involve the employment of laborers or mechanics shall require or permit any such laborer or mechanic in any workweek in which he or she is employed on such work to work in excess of forty hours in such workweek unless such laborer or mechanic receives compensation at a rate not less than one and one-half times the basic rate of pay for all hours worked in excess of forty hours in such workweek.

2. Violation; liability for unpaid wages; liquidated damages. In the event of any violation of the clause set forth in paragraph (1.) of this section, the contractor and any subcontractor responsible therefor shall be liable for the unpaid wages. In addition, such contractor and subcontractor shall be liable to the United States (in the case of work done under contract for the District of Columbia or a territory, to such District or to such territory), for liquidated damages. Such liquidated damages shall be computed with respect to each individual laborer or mechanic, including watchmen and guards, employed in violation of the clause set forth in paragraph (1.) of this section, in the sum of $10 for each calendar day on which such individual was required or permitted to work in excess of the standard workweek of forty hours without payment of the overtime wages required by the clause set forth in paragraph (1.) of this section.

3. Withholding for unpaid wages and liquidated damages. The FHWA or the contacting agency shall upon its own action or upon written request of an authorized representative of the Department of Labor withhold or cause to be withheld, from any moneys payable on account of work performed by the contractor or subcontractor under any such contract or any other Federal contract with the same prime contractor, or any other federally-assisted contract subject to the Contract Work Hours and Safety Standards Act, which is held by the same prime contractor, such sums as may be determined to be necessary to satisfy any liabilities of such contractor or subcontractor for unpaid wages and liquidated damages as provided in the clause set forth in paragraph (2.) of this section.

4. Subcontracts. The contractor or subcontractor shall insert in any subcontracts the clauses set forth in paragraph (1.) through (4.) of this section and also a clause requiring the subcontractors to include these clauses in any lower tier subcontracts. The prime contractor shall be responsible for compliance by any subcontractor or lower tier subcontractor with the clauses set forth in paragraphs (1.) through (4.) of this section.

VI. SUBLETTING OR ASSIGNING THE CONTRACT

This provision is applicable to all Federal-aid construction contracts on the National Highway System.

1. The contractor shall perform with its own organization contract work amounting to not less than 30 percent (or a greater percentage if specified elsewhere in the contract) of the total original contract price, excluding any specialty items designated by the contracting agency. Specialty items may be performed by subcontract and the amount of any such specialty items performed may be deducted from the total original contract price before computing the amount of work required to be performed by the contractor's own organization (23 CFR 635.116).

a. The term "perform work with its own organization" refers to workers employed or leased by the prime contractor, and equipment owned or rented by the prime contractor, with or without operators. Such term does not include employees or equipment of a subcontractor or lower tier subcontractor, agents of the prime contractor, or any other assignees. The term may include payments for the costs of hiring leased employees from an employee leasing firm meeting all relevant Federal and State regulatory requirements. Leased employees may only be included in this term if the prime contractor meets all of the following conditions:

(1) the prime contractor maintains control over the supervision of the day-to-day activities of the leased employees;
(2) the prime contractor remains responsible for the quality of the work of the leased employees;
(3) the prime contractor retains all power to accept or exclude individual employees from work on the project; and
(4) the prime contractor remains ultimately responsible for the payment of predetermined minimum wages, the submission of payrolls, statements of compliance and all other Federal regulatory requirements.

b. "Specialty Items" shall be construed to be limited to work that requires highly specialized knowledge, abilities, or equipment not ordinarily available in the type of contracting organizations qualified and expected to bid or propose on the contract as a whole and in general are to be limited to minor components of the overall contract.

2. The contract amount upon which the requirements set forth in paragraph (1) of Section VI is computed includes the cost of material and manufactured products which are to be purchased or produced by the contractor under the contract provisions.

3. The contractor shall furnish (a) a competent superintendent or supervisor who is employed by the firm, has full authority to direct performance of the work in accordance with the contract requirements, and is in charge of all construction operations (regardless of who performs the work) and (b) such other of its own organizational resources (supervision, management, and engineering services) as the contracting officer determines is necessary to assure the performance of the contract.

4. No portion of the contract shall be sublet, assigned or otherwise disposed of except with the written consent of the contracting officer, or authorized representative, and such consent when given shall not be construed to relieve the contractor of any responsibility for the fulfillment of the contract. Written consent will be given only after the contracting agency has assured that each subcontract is evidenced in writing and that it contains all pertinent provisions and requirements of the prime contract.

5. The 30% self-performance requirement of paragraph (1) is not applicable to design-build contracts; however, contracting agencies may establish their own self-performance requirements.

VII. SAFETY: ACCIDENT PREVENTION

This provision is applicable to all Federal-aid construction contracts and to all related subcontracts.

1. In the performance of this contract the contractor shall comply with all applicable Federal, State, and local laws governing safety, health, and sanitation (23 CFR 635). The contractor shall provide all safeguards, safety devices and protective equipment and take any other needed actions as it determines, or as the contracting officer may determine, to be reasonably necessary to protect the life and health of employees on the job and the safety of the public and to protect property in connection with the performance of the work covered by the contract.

2. It is a condition of this contract, and shall be made a condition of each subcontract, which the contractor enters into pursuant to this contract, that the contractor and any subcontractor shall not permit any employee, in performance of the contract, to work in surroundings or under conditions which are unsanitary, hazardous or dangerous to his/her health or safety, as determined under construction safety and health standards (29 CFR 1926) promulgated by the Secretary of Labor, in accordance with Section 107 of the Contract Work Hours and Safety Standards Act (40 U.S.C. 3704).

3. Pursuant to 29 CFR 1926.3, it is a condition of this contract that the Secretary of Labor or authorized representative thereof, shall have right of entry to any site of contract performance to inspect or investigate the matter of compliance with the construction safety and health standards and to carry out the duties of the Secretary under Section 107 of the Contract Work Hours and Safety Standards Act (40 U.S.C.3704).

VIII. FALSE STATEMENTS CONCERNING HIGHWAY PROJECTS

This provision is applicable to all Federal-aid construction contracts and to all related subcontracts.

In order to assure high quality and durable construction in conformity with approved plans and specifications and a high degree of reliability on statements and representations made by engineers, contractors, suppliers, and workers on Federal-aid highway projects, it is essential that all persons concerned with the project perform their functions as carefully, thoroughly, and honestly as possible. Willful falsification, distortion, or misrepresentation with respect to any facts related to the project is a violation of Federal law. To prevent any misunderstanding regarding the seriousness of these and similar acts, Form FHWA-1022 shall be posted on each Federal-aid highway project (23 CFR 635) in one or more places where it is readily available to all persons concerned with the project:

18 U.S.C. 1020 reads as follows:

"Whoever, being an officer, agent, or employee of the United States, or of any State or Territory, or whoever, whether a person, association, firm, or corporation, knowingly makes any false statement, false representation, or false report as to the character, quality, quantity, or cost of the material used or to be used, or the quantity or quality of the work performed or to be performed, or the cost thereof in connection with the submission of plans, maps, specifications, contracts, or costs of construction on any highway or related project submitted for approval to the Secretary of Transportation; or

Whoever knowingly makes any false statement, false representation, false report or false claim with respect to the character, quality, quantity, or cost of any work performed or to be performed, or materials furnished or to be furnished, in connection with the construction of any highway or related project approved by the Secretary of Transportation; or

Whoever knowingly makes any false statement or false representation as to material fact in any statement, certificate, or report submitted pursuant to provisions of the Federal-aid Roads Act approved July 1, 1916, (39 Stat. 355), as amended and supplemented;

Shall be fined under this title or imprisoned not more than 5 years or both."

IX. IMPLEMENTATION OF CLEAN AIR ACT AND FEDERAL WATER POLLUTION CONTROL ACT

This provision is applicable to all Federal-aid construction contracts and to all related subcontracts.

By submission of this bid/proposal or the execution of this contract, or subcontract, as appropriate, the bidder, proposer, Federal-aid construction contractor, or subcontractor, as appropriate, will be deemed to have stipulated as follows:

1. That any person who is or will be utilized in the performance of this contract is not prohibited from receiving an award due to a violation of Section 508 of the Clean Water Act or Section 306 of the Clean Air Act.
2. That the contractor agrees to include or cause to be included the requirements of paragraph (1) of this Section X in every subcontract, and further agrees to take such action as the contracting agency may direct as a means of enforcing such requirements.

X. CERTIFICATION REGARDING DEBARMENT, SUSPENSION, INELIGIBILITY AND VOLUNTARY EXCLUSION

This provision is applicable to all Federal-aid construction contracts, design-build contracts, subcontracts, lower-tier subcontracts, purchase orders, lease agreements, consultant contracts or any other covered transaction requiring FHWA approval or that is estimated to cost $25,000 or more – as defined in 2 CFR Parts 180 and 1200.

1. Instructions for Certification – First Tier Participants:

a. By signing and submitting this proposal, the prospective first tier participant is providing the certification set out below.

b. The inability of a person to provide the certification set out below will not necessarily result in denial of participation in this covered transaction. The prospective first tier participant shall submit an explanation of why it cannot provide the certification set out below. The certification or explanation will be considered in connection with the department or agency's determination whether to enter into this transaction. However, failure of the prospective first tier participant to furnish a certification or an explanation shall disqualify such a person from participation in this transaction.

c. The certification in this clause is a material representation of fact upon which reliance was placed when the contracting agency determined to enter into this transaction. If it is later determined that the prospective participant knowingly rendered an erroneous certification, in addition to other remedies available to the Federal Government, the contracting agency may terminate this transaction for cause of default.

d. The prospective first tier participant shall provide immediate written notice to the contracting agency to whom this proposal is submitted if any time the prospective first tier participant learns that its certification was erroneous when submitted or has become erroneous by reason of changed circumstances.

e. The terms "covered transaction," "debarred," "suspended," "ineligible," "participant," "person," "principal," and "voluntarily excluded," as used in this clause, are defined in 2 CFR Parts 180 and 1200. "First Tier Covered Transactions" refers to any covered transaction between a grantee or subgrantee of Federal funds and a participant (such as the prime or general contract). "Lower Tier Covered Transactions" refers to any covered transaction under a First Tier Covered Transaction (such as subcontracts). "First Tier Participant" refers to the participant who has entered into a covered transaction with a grantee or subgrantee of Federal funds (such as the prime or general contractor). "Lower Tier Participant" refers any participant who has entered into a covered transaction with a First Tier Participant or other Lower Tier Participants (such as subcontractors and suppliers).

f. The prospective first tier participant agrees by submitting this proposal that, should the proposed covered transaction be entered into, it shall not knowingly enter into any lower tier covered transaction with a person who is debarred, suspended, declared ineligible, or voluntarily excluded from participation in this covered transaction, unless authorized by the department or agency entering into this transaction.

g. The prospective first tier participant further agrees by submitting this proposal that it will include the clause titled "Certification Regarding Debarment, Suspension, Ineligibility and Voluntary Exclusion-Lower Tier Covered Transactions," provided by the department or contracting agency, entering into this covered transaction, without modification, in all lower tier covered transactions and in all solicitations for lower tier covered transactions exceeding the $25,000 threshold.

h. A participant in a covered transaction may rely upon a certification of a prospective participant in a lower tier covered transaction that is not debarred, suspended, ineligible, or voluntarily excluded from the covered transaction, unless it knows that the certification is erroneous. A participant is responsible for ensuring that its principals are not suspended, debarred, or otherwise ineligible to participate in covered transactions. To verify the eligibility of its principals, as well as the eligibility of any lower tier prospective participants, each participant may, but is not required to, check the Excluded Parties List System website (https://www.epls.gov/), which is compiled by the General Services Administration.

i. Nothing contained in the foregoing shall be construed to require the establishment of a system of records in order to render in good faith the certification required by this clause. The knowledge and information of the prospective participant is not required to exceed that which is normally possessed by a prudent person in the ordinary course of business dealings.

j. Except for transactions authorized under paragraph (f) of these instructions, if a participant in a covered transaction knowingly enters into a lower tier covered transaction with a person who is suspended, debarred, ineligible, or voluntarily excluded from participation in this transaction, in addition to other remedies available to the Federal Government, the department or agency may terminate this transaction for cause or default.

* * * * *

2. Certification Regarding Debarment, Suspension, Ineligibility and Voluntary Exclusion – First Tier Participants:

a. The prospective first tier participant certifies to the best of its knowledge and belief, that it and its principals:

(1) Are not presently debarred, suspended, proposed for debarment, declared ineligible, or voluntarily excluded from participating in covered transactions by any Federal department or agency;

(2) Have not within a three-year period preceding this proposal been convicted of or had a civil judgment rendered against them for commission of fraud or a criminal offense in connection with obtaining, attempting to obtain, or performing a public (Federal, State or local) transaction or contract under a public transaction; violation of Federal or State antitrust statutes or commission of embezzlement, theft, forgery, bribery, falsification or destruction of records, making false statements, or receiving stolen property;

(3) Are not presently indicted for or otherwise criminally or civilly charged by a governmental entity (Federal, State or local) with commission of any of the offenses enumerated in paragraph (a)(2) of this certification; and

(4) Have not within a three-year period preceding this application/proposal had one or more public transactions (Federal, State or local) terminated for cause or default.

b. Where the prospective participant is unable to certify to any of the statements in this certification, such prospective participant shall attach an explanation to this proposal.

2. **Instructions for Certification - Lower Tier Participants:**

(Applicable to all subcontracts, purchase orders and other lower tier transactions requiring prior FHWA approval or estimated to cost $25,000 or more - 2 CFR Parts 180 and 1200)

a. By signing and submitting this proposal, the prospective lower tier is providing the certification set out below.

b. The certification in this clause is a material representation of fact upon which reliance was placed when this transaction was entered into. If it is later determined that the prospective lower tier participant knowingly rendered an erroneous certification, in addition to other remedies available to the Federal Government, the department, or agency with which this transaction originated may pursue available remedies, including suspension and/or debarment.

c. The prospective lower tier participant shall provide immediate written notice to the person to which this proposal is submitted if at any time the prospective lower tier participant learns that its certification was erroneous by reason of changed circumstances.

d. The terms "covered transaction," "debarred," "suspended," "ineligible," "participant," "person," "principal," and "voluntarily excluded," as used in this clause, are defined in 2 CFR Parts 180 and 1200. You may contact the person to which this proposal is submitted for assistance in obtaining a copy of those regulations. "First Tier Covered Transactions" refers to any covered transaction between a grantee or subgrantee of Federal funds and a participant (such as the prime or general contract). "Lower Tier Covered Transactions" refers to any covered transaction under a First Tier Covered Transaction (such as subcontracts). "First Tier Participant" refers to the participant who has entered into a covered transaction with a grantee or subgrantee of Federal funds (such as the prime or general contractor). "Lower Tier Participant" refers any participant who has entered into a covered transaction with a First Tier Participant or other Lower Tier Participants (such as subcontractors and suppliers).

e. The prospective lower tier participant agrees by submitting this proposal that, should the proposed covered transaction be entered into, it shall not knowingly enter into any lower tier covered transaction with a person who is debarred, suspended, declared ineligible, or voluntarily excluded from participation in this covered transaction, unless authorized by the department or agency with which this transaction originated.

f. The prospective lower tier participant further agrees by submitting this proposal that it will include this clause titled "Certification Regarding Debarment, Suspension, Ineligibility and Voluntary Exclusion-Lower Tier Covered Transaction," without modification, in all lower tier covered transactions and in all solicitations for lower tier covered transactions exceeding the $25,000 threshold.

g. A participant in a covered transaction may rely upon a certification of a prospective participant in a lower tier covered transaction that is not debarred, suspended, ineligible, or voluntarily excluded from the covered transaction, unless it knows that the certification is erroneous. A participant is responsible for ensuring that its principals are not suspended, debarred, or otherwise ineligible to participate in covered transactions. To verify the eligibility of its principals, as well as the eligibility of any lower tier prospective participants, each participant may, but is not required to, check the Excluded Parties List System website (https://www.epls.gov/), which is compiled by the General Services Administration.

h. Nothing contained in the foregoing shall be construed to require establishment of a system of records in order to render in good faith the certification required by this clause. The knowledge and information of participant is not required to exceed that which is normally possessed by a prudent person in the ordinary course of business dealings.

i. Except for transactions authorized under paragraph e of these instructions, if a participant in a covered transaction knowingly enters into a lower tier covered transaction with a person who is suspended, debarred, ineligible, or voluntarily excluded from participation in this transaction, in addition to other remedies available to the Federal Government, the

department or agency with which this transaction originated may pursue available remedies, including suspension and/or debarment.

* * * * *

Certification Regarding Debarment, Suspension, Ineligibility and Voluntary Exclusion--Lower Tier Participants:

1. The prospective lower tier participant certifies, by submission of this proposal, that neither it nor its principals is presently debarred, suspended, proposed for debarment, declared ineligible, or voluntarily excluded from participating in covered transactions by any Federal department or agency.

2. Where the prospective lower tier participant is unable to certify to any of the statements in this certification, such prospective participant shall attach an explanation to this proposal.

* * * * *

XI. CERTIFICATION REGARDING USE OF CONTRACT FUNDS FOR LOBBYING

This provision is applicable to all Federal-aid construction contracts and to all related subcontracts which exceed $100,000 (49 CFR 20).

1. The prospective participant certifies, by signing and submitting this bid or proposal, to the best of his or her knowledge and belief, that:

a. No Federal appropriated funds have been paid or will be paid, by or on behalf of the undersigned, to any person for influencing or attempting to influence an officer or employee of any Federal agency, a Member of Congress, an officer or employee of Congress, or an employee of a Member of Congress in connection with the awarding of any Federal contract, the making of any Federal grant, the making of any Federal loan, the entering into of any cooperative agreement, and the extension, continuation, renewal, amendment, or modification of any Federal contract, grant, loan, or cooperative agreement.

b. If any funds other than Federal appropriated funds have been paid or will be paid to any person for influencing or attempting to influence an officer or employee of any Federal agency, a Member of Congress, an officer or employee of Congress, or an employee of a Member of Congress in connection with this Federal contract, grant, loan, or cooperative agreement, the undersigned shall complete and submit Standard Form-LLL, "Disclosure Form to Report Lobbying," in accordance with its instructions.

2. This certification is a material representation of fact upon which reliance was placed when this transaction was made or entered into. Submission of this certification is a prerequisite for making or entering into this transaction imposed by 31 U.S.C. 1352. Any person who fails to file the required certification shall be subject to a civil penalty of not less than $10,000 and not more than $100,000 for each such failure.

3. The prospective participant also agrees by submitting its bid or proposal that the participant shall require that the language of this certification be included in all lower tier subcontracts, which exceed $100,000 and that all such recipients shall certify and disclose accordingly.

ATTACHMENT A - EMPLOYMENT AND MATERIALS PREFERENCE FOR APPALACHIAN DEVELOPMENT HIGHWAY SYSTEM OR APPALACHIAN LOCAL ACCESS ROAD CONTRACTS

This provision is applicable to all Federal-aid projects funded under the Appalachian Regional Development Act of 1965.

1. During the performance of this contract, the contractor undertaking to do work which is, or reasonably may be, done as on-site work, shall give preference to qualified persons who regularly reside in the labor area as designated by the DOL wherein the contract work is situated, or the subregion, or the Appalachian counties of the State wherein the contract work is situated, except:

a. To the extent that qualified persons regularly residing in the area are not available.

b. For the reasonable needs of the contractor to employ supervisory or specially experienced personnel necessary to assure an efficient execution of the contract work.

c. For the obligation of the contractor to offer employment to present or former employees as the result of a lawful collective bargaining contract, provided that the number of nonresident persons employed under this subparagraph (1c) shall not exceed 20 percent of the total number of employees employed by the contractor on the contract work, except as provided in subparagraph (4) below.

2. The contractor shall place a job order with the State Employment Service indicating (a) the classifications of the laborers, mechanics and other employees required to perform the contract work, (b) the number of employees required in each classification, (c) the date on which the participant estimates such employees will be required, and (d) any other pertinent information required by the State Employment Service to complete the job order form. The job order may be placed with the State Employment Service in writing or by telephone. If during the course of the contract work, the information submitted by the contractor in the original job order is substantially modified, the participant shall promptly notify the State Employment Service.

3. The contractor shall give full consideration to all qualified job applicants referred to him by the State Employment Service. The contractor is not required to grant employment to any job applicants who, in his opinion, are not qualified to perform the classification of work required.

4. If, within one week following the placing of a job order by the contractor with the State Employment Service, the State Employment Service is unable to refer any qualified job applicants to the contractor, or less than the number requested, the State Employment Service will forward a certificate to the contractor indicating the unavailability of applicants. Such certificate shall be made a part of the contractor's permanent project records. Upon receipt of this certificate, the contractor may employ persons who do not normally reside in the labor area to fill positions covered by the certificate, notwithstanding the provisions of subparagraph (1c) above.

5. The provisions of 23 CFR 633.207(e) allow the contracting agency to provide a contractual preference for the use of mineral resource materials native to the Appalachian region.

6. The contractor shall include the provisions of Sections 1 through 4 of this Attachment A in every subcontract for work which is, or reasonably may be, done as on-site work.

STATE OF CALIFORNIA - DEPARTMENT OF TRANSPORTATION

FINAL REPORT-UTILIZATION OF DISADVANTAGED BUSINESS ENTERPRISES (DBE), FIRST-TIER SUBCONTRACTORS

CEM-2402F (REV 02/2008)

ADA Notice
For individuals with sensory disabilities, this document is available in alternate formats. For information call (916) 654-6410 or TDD (916) 654-3880 or write Records and Forms Management, 1120 N Street, MS-89, Sacramento, CA 95814

CONTRACT NUMBER	COUNTY	ROUTE	POST MILES	FEDERAL AID PROJECT NO.	ADMINISTERING AGENCY		CONTRACT COMPLETION DATE
PRIME CONTRACTOR			BUSINESS ADDRESS			ESTIMATED CONTRACT AMOUNT $	

ITEM NO.	DESCRIPTION OF WORK PERFORMED AND MATERIAL PROVIDED	COMPANY NAME AND BUSINESS ADDRESS	DBE CERT. NUMBER	CONTRACT PAYMENTS						DATE WORK COMPLETE	DATE OF FINAL PAYMENT
				NON-DBE	DBE	BA UDBE	APA UDBE	NA UDBE	W UDBE		
				$	$	$	$	$	$		
				$	$	$	$	$	$		
				$	$	$	$	$	$		
				$	$	$	$	$	$		
				$	$	$	$	$	$		
				$	$	$	$	$	$		
				$	$	$	$	$	$		
				$	$	$	$	$	$		
				$	$	$	$	$	$		
				$	$	$	$	$	$		
				$	$	$	$	$	$		
				$	$	$	$	$	$		
ORIGINAL COMMITMENT $			TOTAL	$	$	$	$	$	$	BA--Black American APA--Asian-Pacific Islander	

UDBE

NA–Native American

W-Woman

List all First-Tier Subcontractors, Disadvantaged Business Enterprises (DBEs) and underutilized DBEs (UDBEs) regardless of tier, whether or not the firms were originally listed for goal credit. If actual UDBE utilization (or item of work) was different than that approved at time of award, provide comments on back of form. List actual amount paid to each entity.

I CERTIFY THAT THE ABOVE INFORMATION IS COMPLETE AND CORRECT

CONTRACTOR REPRESENTATIVE'S SIGNATURE	BUSINESS PHONE NUMBER	DATE

TO THE BEST OF MY INFORMATION AND BELIEF, THE ABOVE INFORMATION IS COMPLETE AND CORRECT

RESIDENT ENGINEER'S SIGNATURE	BUSINESS PHONE NUMBER	DATE

Copy Distribution-Caltrans contracts: **Original** - District Construction; **Copy**- Business Enterprise Program; **Copy**- Contractor; **Copy** Resident Engineer

Copy Distribution-Local Agency contracts: **Original** - District Local Assistance Engineer (submitted with the Report of Expenditure; **Copy**- District Local Assistance Engineer; **Copy**- Local Agency file

FINAL REPORT – UTILIZATION OF DISADVANTAGED BUSINESS ENTERPRISES (DBE), FIRST-TIER SUBCONTRACTORS
CEM 2402(F) (Rev. 02/2008)

The form requires specific information regarding the construction project: Contract Number, County, Route, Post Miles, Federal-aid Project No., the Administering Agency, the Contract Completion Date and the Estimated Contract Amount. It requires the prime contractor name and business address. The focus of the form is to describe who did what by contract item number and descriptions, asking for specific dollar values of item work completed broken down by subcontractors who performed the work both DBE and non-DBE work forces. DBE prime contractors are required to show the date of work performed by their own forces along with the corresponding dollar value of work.

The form has a column to enter the Contract Item No. (or Item No's) and description of work performed or materials provided, as well as a column for the subcontractor name and business address. For those firms who are DBE, there is a column to enter their DBE Certification Number. The DBE should provide their certification number to the contractor and notify the contractor in writing with the date of the decertification if their status should change during the course of the project.

The form has six columns for the dollar value to be entered for the item work performed by the subcontractor.

The Non-DBE column is used to enter the dollar value of work performed for firms who are not certified DBE.

The decision of which column to be used for entering the DBE dollar value is based on what program(s) status the firm is certified. This program status is determined by the California Unified Certification Program by ethnicity, gender, ownership, and control issues at time of certification. To confirm the certification status and program status, access the Department of Transportation Civil Rights web site at: http://www.dot.ca.gov/hq/bep or by calling (916) 324-1700 or the toll free number at (888) 810-6346.

Based on this DBE Program status, the following table depicts which column to be used:

DBE Program Status	Column to be used
If program status shows DBE only with no other programs listed	DBE
If program status shows DBE, Black American	BA UDBE
If program status shows DBE, Asian-Pacific Islander	APA UDBE
If program status shows DBE, Native American	NA UDBE
If program status shows DBE, Woman	W UDBE

If a contractor performing work as a DBE on the project becomes decertified and still performs work after their decertification date, enter the total dollar value performed by this contractor under the appropriate DBE identification column.

If a contractor performing work as a non-DBE on the project becomes certified as a DBE, enter the dollar value of all work performed after certification as a DBE under the appropriate identification column.

Enter the total of each of the six columns in Form CEM-2402(F).

Any changes to DBE certification must also be submitted on Form-CEM 2403(F).

Enter the Date Work Completed as well as the Date of Final Payment (the date when the prime contractor made the "final payment" to the subcontractor for the portion of work listed as being completed).

The contractor and the resident engineer sign and date the form indicating that the information provided is complete and correct.

EXHIBIT 17-O DISADVANTAGED BUSINESS ENTERPRISES (DBE) CERTIFICATION STATUS CHANGE

STATE OF CALIFORNIA – DEPARTMENT OF TRANSPORTATION
CP-CEM-2403(F) (New. 10/99)

CONTRACT NUMBER	COUNTY	ROUTE	POST MILES	ADMINISTERING AGENCY	CONTRACT COMPLETION DATE

PRIME CONTRACTOR	BUSINESS ADDRESS	ESTIMATED CONTRACT AMOUNT

Prime Contractor: List all DBEs with changes in certification status (certified/decertified) while in your employ, whether or not firms were originally listed for good credit.
Attach DBE certification/Decertification letter in accordance with the Special Provisions

CONTRACT ITEM NO.	SUBCONTRACT NAME AND BUSINESS ADDRESS	BUSINESS PHONE	CERTIFICATION NUMBER	AMOUNT PAID WHILE CERTIFIED	CERTIFICATION/ DECERTIFICATION DATE Letter attached
				$	
				$	
				$	
				$	
				$	
				$	
				$	
				$	
				$	

Comments:

I CERTIFY THAT THE ABOVE INFORMATION IS COMPLETE AND CORRECT

CONTRACTOR REPRESENTATIVE SIGNATURE	TITLE	BUSINESS PHONE NUMBER	DATE

TO THE BEST OF MY KNOWLEDGE, THE ABOVE INFORMATION IS COMPLETE AND CORRECT

RESIDENT ENGINEER	BUSINESS PHONE NUMBER	DATE

Distribution Original copy -DLAE
Copy -1) Business Enterprise Program 2) Prime Contactor 3) Local Agency 4) Resident Engineer

Form CP-CEM 2403(F) (New 10/99)
DISADVANTAGED BUSINESS ENTERPRISES (DBE) CHANGE IN CERTIFICATION STATUS REPORT

The top of the form requires specific information regarding the construction project: Contract Number, County, Route, Post Miles, the Administering Agency, the Contract Completion Date, and the Estimated Contract Amount. It requires the Prime Contractor's name and Business Address. The focus of the form is to substantiate and verify the actual DBE dollar amount paid to contractors on federally funded projects that had a changed in Certification status during the course of the completion of the contract. The two situations that are being addressed by CP-CEM 2403(F) are, if a firm certified as a DBE and doing work on the contract during the course of the project becomes Decertified, and if a non-DBE firm doing work on the contract during the course of the project becomes Certified as a DBE.

The form has a column to enter the Contract Item No (or Item Nos.) as well as a column for the Subcontractor's Name, Business Address, Business Phone, and contractor's Certification Number.

The column entitled Amount Paid While Certified will be used to enter the actual dollar value of the work performed by those contractors who meet the conditions as outlined above during the time period they are Certified as a DBE. This column on the CP-CEM-2403(F) should only reflect the dollar value of work performed while the firm was Certified as a DBE.

The column called Certification/Decertification Date (Letter attached) will reflect either the date of the Decertification Letter sent out by the Civil Rights Program or the date of the Certification Certificate mailed out by the Civil Rights Program. There is a box to check that support documentation is attached to the CP-CEM-2403 (F) form.

There is a Comments section for any additional information that may need to be provided regarding any of the above transactions.

The CEM-2403(F) has an area at the bottom where the Contractor and the Resident Engineer sign and date that the information provided is complete and correct.

There is a Comments section for any additional information that may need to be provided regarding any of the above transactions.

The CEM-2403(F) has an area at the bottom where the Contractor and the Resident Engineer sign and date that the information provided is complete and correct.

SECTION NO. 13 - BID PROPOSAL FORMS

Bid Proposal Form
Bid Proposal Guarantee
Drug Free Workplace Policy and Affidavit
List of Subcontractors
Non-Discrimination in Employee Benefits Ordinance Certification
Minimum Qualifications Questionnaire
Equal Employment Opportunity Certification
Public Contract Code Section 10285.1 Statement
Public Contract Code Section 10162 Questionnaire
Public Contract Code Section 10232 Statement
Non Collusion Affidavit
Debarment and Suspension Certification
Nonlobbying Certification for Federal-Aid Contracts
Disclosure of Lobbying Activities Form and Instructions
Local Agency Bidder - DBE Commitment (Exhibit 15-G(1))
DBE Information – Good Faith Efforts (Exhibit 15-H)
Local Agency Bidder - DBE Information (Exhibit 15-G(2))
Excerpts from the California Labor Code Relating to Apprentices on Public Works
DUNS Form
Green Contracting Survey
Title VI Language
Bidders List (Exhibit 12-G, Part I & II)

BID PROPOSAL CHECKLIST

The following items are required to be submitted as part of the bid proposal. Failure to do so will result in the bid being declared not responsive.

Included Please (√)		Pages
☑	Bid Proposal Form	1 – 06
☑	Bid Proposal Guarantee	1 only
☑	Drug Free Work Place Certification	1 only
☑	List of Subcontractors	1 only
☑	Non-Discrimination in Employee Benefits Ordinance Certification	1 – 9
☑	Minimum Qualifications Questionnaire	1 – 6
☑	Equal Employment Opportunity Certification	1 only
☑	Public Contract Code Section 10285.1 Statement and Public Contract Code Section 10162 Questionnaire	1 only
☑	Public Contract Code Section 10232 Statement	1 only
☑	Non Collusion Affidavit	1 only
☑	Debarment and Suspension Certification	1 only
☑	Non-lobbying Certification for Federal-Aid Contracts	1 only
☑	Disclosure of Lobbying Activities Form and Instructions	1 - 2
☑	Local Agency Bidder – UDBE Commitment (Exhibit 15-G)*	1 - 2
☑	UDBE Information – Good Faith Efforts (Exhibit 15-H)*	1 only
☑	DUNS FORM	1 only
☑	Cost Breakdown for Lump Sum Electrical Items**	1 only

*** This information is due by no later than 4:00PM, four (4) working days from bid opening. Please deliver to Jose R. Ledesma, New City Hall, 915 I Street, Room 2000, Sacramento CA 95814. Contact info: jledesma@cityofsacramento.org, 916-808-8195.**

****Bidder generated document due with submission of bid**

CITY OF SACRAMENTO
Department of Transportation
Engineering Services Division

TO THE HONORABLE CITY COUNCIL
SACRAMENTO, CALIFORNIA:

In compliance with the Contract Documents, the undersigned hereby proposes to furnish all required labor, materials, supervision, transportation, equipment, services, taxes and incidentals required for:

WEST TUNNEL RAMPS ACCESS PROJECT
(PN: T15029031)
(Revised on 1/15/14)

in the City and County of Sacramento, California.

The Work is to be done in strict conformity with the Contract Documents now on file in the Office of the City Clerk, for the following sum:

Item No.	Item	Estimated Quantity	Unit	Unit Price	Total
1	Preconstruction Photographs	1	LS	$ 750	$ 750
2	Prepare Storm Water Pollution Prevention Plan	1	LS	$ 3000	$ 3000
3	Storm Water Annual Report	1	LS	$ 500	$ 500
4	Construction Site Management	1	LS	$ 5000	$ 5000
5	Traffic Control Systems	1	LS	$ 25000	$ 25000
6	Clearing and Grubbing	1	LS	$ 15,000	$ 15,000
7	Bollard to Remove	42	EA	$ 95	$ 3990
8	Traffic Stripe and Pavement Markings to Remove	1	LS	$ 3660	$ 3660
9	Pavement Markers to Remove	1	LS	$ 480	$ 480
10	Pedestrian Boardwalk to Remove	325	SF	$ 4	$ 1300
11	Concrete Curb, Gutter and Sidewalk to Remove	390	SF	$ 3	$ 1170
12	Concrete Curb to Remove	110	LF	$ 6	$ 660
13	Concrete Valley Gutter to Remove	1,650	SF	$ 2.25	$ 3712.50

14	Concrete Island to Remove	2,670	SF	$ 2.25	$ 6007.50
15	Concrete Tunnel Headwall and Wingwalls to Remove	65	SF	$ 31	$ 2015
16	Existing Fence to Remove	500	LF	$ 3	$ 1500
17	Existing Gate to Remove	1	EA	$ 100	$ 100
18	Storm Drain Inlet to Remove	2	EA	$ 600	$ 1200
19	Parking Booth to Remove	1	EA	$ 400	$ 400
20	Pay Station Shelter to Relocate	1	EA	$ 6000	$ 6000
21	Purple Martin Pole to Relocate	3	EA	$ 885	$ 2655
22	Storm Drain Pipe to Abandon	38	LF	$ 40	$ 1520
23	Roadway Excavation and Grading (F)	3,160	CY	$ 42	$ 132,720
24	Aggregate Base Class 2 to Place	1,460	CY	$ 40	$ 58,400
25	Curb and Gutter Type 1 to Construct	9	LF	$ 80	$ 720
26	Curb and Gutter Type 2 to Construct	100	LF	$ 32	$ 3200
27	Curb Type 3 to Construct	830	LF	$ 18	$ 14,940
28	Curb Type 3 (Modified) To Construct	120	LF	$ 22	$ 2640
29	Wheel Stop to Install	77	EA	$ 100	$ 7700
30	PCC Edge Wall to Install	550	LF	$ 80	$ 44,000
31	Concrete Stairway to Construct	30	SF	$ 140	$ 4200
32	Minor Concrete (Valley Gutter) to Construct	305	LF	$ 50	$ 15,250

33	Concrete Island to Construct	440	SF	$ 8	$ 3520
34	4" PCC Sidewalk to Construct	11,900	SF	$ 5.25	$ 62.475
35	4" Colored PCC Sidewalk to Construct	1,850	SF	$ 8	$ 14,800
36	PCC Pedestrian Walkway to Construct	5,100	SF	$ 12.25	$ 62.475
37	Truncated Domes on New Ramps (36" x 48")	21	EA	$ 425	$ 8925
38	Truncated Domes on New Ramps (36" x 60")	1	EA	$ 500	$ 500
39	Chain Link Fence to Install	50	LF	$ 115	$ 5750
40	Railroad Track to Install	460	LF	$ 25	$ 11,500
41	Pedestrian Railing To Install	15	LF	$ 215	$ 3225
42	Picket Fence to Install	630	LF	$ 60	$ 37,800
43	Pedestrian Barricade to Install	1	EA	$ 400	$ 400
44	Bollards to Install	8	EA	$ 250	$ 2000
45	Gutter Drain No.20 to Construct	4	EA	$ 1500	$ 6000
46	Gutter Drain No.20 (Modified) to Construct	2	EA	$ 2000	$ 4000
47	3" PVC Storm Drain Pipe to Install	60	LF	$ 30	$ 1800
48	12" Storm Drain Pipe to Install	240	LF	$ 120	$ 28,800
49	Slurry Seal Type 2 to Place	5,700	SY	$ 6.00	$ 34,200

50	Cold Plane AC Pavement (0.17' Max)	340	SY	$ 40	$ 13,600
51	Hot Mix Asphalt (3/4") Pavement to Place	970	TON	$ 105	$ 101,850
52	Hot Mix Asphalt (1/2") Pavement to Place	430	TON	$ 112	$ 48,160
53	Roadside Sign to Remove	13	EA	$ 150	$ 1950
54	Roadside Sign to Relocate	1	EA	$ 250	$ 250
55	Roadside Sign to Place	22	EA	$ 650	$ 14,300
56	Thermoplastic Traffic Stripe to Place	110	LF	$ 3	$ 330
57	Thermoplastic Pavement Marking to Place	3,000	SF	$ 6	$ 18,000
58	Pavement Marker to Place	202	EA	$ 4	$ 808
59	Painted Pavement Stripe to Place	6,600	LF	$ 1.10	$ 7260
60	Painted Stall Markings to Place	1	LS	$ 1600	$ 1600
61	Audio Bird Control Device to Install	1	LS	$ 1500	$ 1500
62	Automatic Irrigation System to Install	1	LS	$ 22,066	$ 22,066
63	Soil Preparation and Finish Grading	1	LS	$ 8024	$ 8024
64	Shrubs to Plant	1	LS	$ 12,200	$ 12,200
65	Landscape Maintenance	1	LS	$ 1100	$ 1100
66	Parking Lot Lighting Installation	1	LS	$ 221,096	$ 221,096

67	Permeable Interlocking Pavers	13,900	SF	$ 13.50	$ 187,650
68	Mobilization (5%)	1	LS	$ 15,000	$ 15,000

(F) – denotes final pay quantity

CONTRACTOR NAME: B & M Builders Inc TOTAL $ 1,334,304

It is understood that this Bid Proposal is based upon completion of the Work within a period of **Fifty-Five (55) WORKING DAYS,** commencing on the date set forth in the written Notice to Proceed issued by the City to the Contractor.

In determining the amount bid by each bidder, the City may disregard mathematical errors in addition, subtraction, multiplication, and division that appear obvious on the face of the Proposal. When such a mathematical error appears on the face of the Proposal, the City shall have the right to correct such error and to compute the total amount bid by said bidder on the basis of the corrected figure or figures.

The City Council may reject any and all bids and waive any informalities or minor irregularities in the bids.

When an item price is required to be set forth in the Proposal, and the total for the item set forth separately does not agree with a figure which is derived by multiplying the item price times the Engineer's estimate of the quantity of work to be performed for said item, the item price shall prevail over the sum set forth as the total for the item unless, in the sole discretion of the City, such a procedure would be inconsistent with the policy of the bidding procedure. The total paid for each such item of work shall be based upon the item price and not the total price. Should the Proposal contain only total price for the item and the item price is omitted, the City shall determine the item price by dividing the total price for the item by the Engineer's estimate of the estimated quantities of work to be performed as items of work.

If the Proposal contains neither the item price nor the total price for the item, then it shall be deemed incomplete and the Proposal shall be disregarded.

The undersigned has examined the location of the proposed Work, the local conditions at the place where the Work is to be done, is familiar with the Contract Documents and is familiar and expressly agrees to the liquidated damages provision of the Contract Documents.

The undersigned has checked carefully all of the foregoing figures and understands that the City of Sacramento will not be responsible for any errors or omissions on the part of the undersigned in making up this Bid Proposal.

Enclosed is a Bid Proposal Guarantee, as required, consisting of a bidder's bond or other acceptable security for not less than ten percent (10%) of the amount Bid Proposal.

The undersigned agrees that all addenda received and acknowledged herein shall become a part of and be included in this Bid Proposal. This Bid Proposal includes the following addenda:

Add. #	1	DATE	January 7th 2014
Add. #	2	DATE	January 10, 2014
Add. #	3	DATE	January 15, 2014

KNOW ALL MEN BY THESE PRESENTS,

That we, B & M Builders, Inc.

as Principal, and Philadelphia Indemnity Insurance Company

a corporation duly organized under the laws of the State of Pennsylvania and duly licensed to become sole surety on bonds required or authorized by the State of California, as Surety, are held and firmly bound unto the City of Sacramento, hereinafter called the City, in the penal sum of ten percent (10%) of the (BASE OR LUMP SUM) Proposal of the Principal above named, or other amount as set forth in the Invitation to Bidders, submitted by said Principal to the City for the Work described below, for the payment of which sum in lawful money of the United States, well and truly to be made, we bind ourselves, our heirs, executors, administrators and successors, jointly and severally, firmly by these presents.

THE CONDITION OF THIS OBLIGATION IS SUCH
That whereas the Principal has submitted the above-mentioned Proposal to the City, for which Proposals are to be opened in the Council Chambers at City Hall, Sacramento, California, on 01-15-2014 for the Work specifically described as follows:

West Tunnel Ramps Access Project
(PN: T15029031)

NOW, THEREFORE, if the aforesaid Principal is awarded the Contract and within the time and manner required under the Contract Documents, enters into a written Contract, in the prescribed form, in accordance with the Proposal, and files two (2) bonds with the City, one to guarantee faithful performance and the other to guarantee payment for labor and materials, and files the required insurance policies with the City, all as required by the Contract Documents or by law, then the obligation shall be null and void; otherwise it shall be and remain in full force and effect.

In the event suit is brought upon this bond by the Obligee and judgment is recovered, the Surety shall pay all costs incurred by the Obligee in such suit, including a reasonable attorney's fee to be fixed by the court, which sums shall be additional to the principal amount of this bond.

IN WITNESS THEREOF We have hereunto set our hands and seal this 8th day of January 20 14.

B & M Builders, Inc.
PRINCIPAL
11151 Trade Center Drive, Ste. 200B, Rancho Cordova, CA 95670
Address

See attached
NOTARY

Philadelphia Indemnity Insurance Company
SURETY
251 South Lake Avenue, Ste. 360, Pasadena, CA 91101
Address

Ryan Tash, Attorney-In-Fact

SEE ATTACHED NOTARY ACKNOWLEDGMENT
NOTARY

ACKNOWLEDGMENT

State of California
County of Sacramento)

On January 8, 2014 before me, Susan Fournier, Notary Public
(insert name and title of the officer)

personally appeared Ryan Tash
who proved to me on the basis of satisfactory evidence to be the person(s) whose name(s) is/are subscribed to the within instrument and acknowledged to me that he/she/they executed the same in his/her/their authorized capacity(ies), and that by his/her/their signature(s) on the instrument the person(s), or the entity upon behalf of which the person(s) acted, executed the instrument.

I certify under PENALTY OF PERJURY under the laws of the State of California that the foregoing paragraph is true and correct.

WITNESS my hand and official seal.

Signature _____ **(Seal)**

SUSAN FOURNIER
COMM. # 1995967
NOTARY PUBLIC-CALIFORNIA
SACRAMENTO COUNTY
MY COMM. EXP. NOV. 11, 2016

ACKNOWLEDGMENT

State of California
County of Sacramento)

On February 22, 2017 before me, Susan Fournier, Notary Public
(insert name and title of the officer)

personally appeared Patrick Mullen ,
who proved to me on the basis of satisfactory evidence to be the person(s) whose name(s) is/are subscribed to the within instrument and acknowledged to me that he/she/they executed the same in his/her/their authorized capacity(ies), and that by his/her/their signature(s) on the instrument the person(s), or the entity upon behalf of which the person(s) acted, executed the instrument.

I certify under PENALTY OF PERJURY under the laws of the State of California that the foregoing paragraph is true and correct.

WITNESS my hand and official seal.

SUSAN FOURNIER
COMM. # 1995967
NOTARY PUBLIC-CALIFORNIA
SACRAMENTO COUNTY
MY COMM. EXP. NOV. 11, 2016

Signature _____ (Seal)

1606

PHILADELPHIA INDEMNITY INSURANCE COMPANY
One Bala Plaza, Suite 100
Bala Cynwyd, PA 19004
Power of Attorney

KNOW ALL PERSONS BY THESE PRESENTS: that **PHILADELPHIA INDEMNITY INSURANCE COMPANY** (the Company), a corporation organized and existing under the laws of the Commonwealth of Pennsylvania, does hereby constitute and appoint: **Christine Boscacci, John T. Page, Ryan Tash & Susan Fournier of Surety Solutions Insurance Services, Inc. City of Rancho Cordova, State of California.**

Its true and lawful Attorney(s) in fact with full authority to execute on its behalf bonds, undertakings, recognizances and other contracts of indemnity and writings obligatory in the nature thereof, issued in the course of its business and to bind the Company thereby, in an amount not to exceed **$5,000,000,000**

This Power of Attorney is granted and is signed and sealed by facsimile under and by the authority of the following Resolution adopted by the Board of Directors of PHILADELPHIA INDEMNITY INSURANCE COMPANY at a meeting duly called the 1st day of July, 2011.

RESOLVED: That the Board of Directors hereby authorizes the President or any Vice President of the Company to: (1) Appoint Attorney(s) in Fact and authorize the Attorney(s) in Fact to execute on behalf of the Company bonds and undertakings, contracts of indemnity and other writings obligatory in the nature thereof and to attach the seal of the Company thereto; and (2) to remove, at any time, any such Attorney-in-Fact and revoke the authority given. And, be it

FURTHER RESOLVED: That the signatures of such officers and the seal of the Company may be affixed to any such Power of Attorney or certificate relating thereto by facsimile, and any such Power of Attorney so executed and certified by facsimile signatures and facsimile seal shall be valid and biding upon the Company in the future with the respect to any bond or undertaking to which it is attached.

IN TESTIMONY WHEREOF, PHILADELPHIA INDEMNITY INSURANCE COMPANY HAS CAUSED THIS INSTRUMENT TO BE SIGNED AND ITS CORPORATE SEALTO BE AFFIXED BY ITS AUTHORIZED OFFICE THIS 7TH DAY OF FEBRUARY 2013.

(Seal)

Robert D. O'Leary Jr., President & CEO
Philadelphia Indemnity Insurance Company

On this 7th day of February 2013, before me came the individual who executed the preceding instrument, to me personally known, and being by me duly sworn said that he is the therein described and authorized officer of the **PHILADELPHIA INDEMNITY INSURANCE COMPANY**; that the seal affixed to said instrument is the Corporate seal of said Company; that the said Corporate Seal and his signature were duly affixed.

COMMONWEALTH OF PENNSYLVANIA
NOTARIAL SEAL
DANIELLE PORATH, Notary Public
Lower Merion Twp., Montgomery County
My Commission Expires March 22, 2016

Notary Public:

residing at: Bala Cynwyd, PA

(Notary Seal)

My commission expires: March 22, 2016

I, Craig P. Keller, Executive Vice President, Chief Financial Officer and Secretary of PHILADELPHIA INDEMNITY INSURANCE COMPANY, do herby certify that the foregoing resolution of the Board of Directors and this Power of Attorney issued pursuant thereto are true and correct and are still in full force and effect. I do further certify that Robert D. O'Leary Jr., who executed the Power of Attorney as President, was on the date of execution of the attached Power of Attorney the duly elected President of PHILADELPHIA INDEMNITY INSURANCE COMPANY,

In Testimony Whereof I have subscribed my name and affixed the facsimile seal of each Company this 8th day of January 20 14

Craig P. Keller, Executive Vice President, Chief Financial Officer & Secretary
PHILADELPHIA INDEMNITY INSURANCE COMPANY

NOTE: State whether your concern is a corporation, a co-partnership, private individual, or individuals doing business under a firm name.

Corporation CA

If the Bidder is a corporation, the Bid Proposal must be executed in the name of the corporation and must be signed by a duly authorized officer of the corporation.

If the Bidder is a partnership, the Bid Proposal must be executed in the name of the partnership and one of the partners must subscribe their signature thereto as the authorized representative of the partnership.

AMOUNT OF BID PROPOSAL GUARANTEE ENCLOSED:

($ Bid Bond) not less than ten percent (10%) of amount Bid Proposal

____ CERTIFIED CHECK
____ CASHIER'S CHECK
✓ BID BOND
____ MONEY ORDER
____ OTHER SECURITY

CONTRACTOR:

By _____ (Signature)

Jonathan Brown
(Print or Type)

Title Vice President
Address 11151 Trade Center Dr. #200
Rancho Cordova, CA 95670
Telephone No. 916 862-0095

Fax No. 866 903-3437

nail Address Service@bm-builders.com

Date January 22, 2014

FOR CITY USE ONLY

Bid Bond Security
☐ Properly Signed ☐ *Improperly Signed*
☐ *Not Included* ☐ Not Required

Type of Deposit
☑ Bid Bond ☐ Cashier/Certified Check
☐ Other _____ Initial: ____

Contractor's License No. 861848 Type A, C8, B31
Expiration Date June 30, 2015
Tax I.D. Nos.- Fed. 610539817 State CA
City of Sacramento Business Operation Tax Certificate No. 1064351
(City will not award contract if Certificate Number is missing.)

Please indicate if you are any of the following:

EBE____ Cert #____ SBE ✓ Cert # 1139120

UDBE____ Cert #____ M/WBE____ Cert #____

DRUG-FREE WORKPLACE POLICY AND AFFIDAVIT

BID PROPOSAL MAY BE DECLARED NONRESPONSIVE IF THIS FORM (COMPLETED) IS NOT ATTACHED.
Pursuant to City Council Resolution CC90-498 dated 6/26/90 the following is required.

The undersigned contractor certifies that it and all subcontractors performing under this Agreement will provide a drug-free workplace by:

1. Publishing a "Drug-Free Workplace" statement notifying employees that the unlawful manufacture, distribution, dispensing, possession or use of a controlled substance is prohibited in the contractor's workplace and specifying the actions that will be taken against employees for violations of such prohibition.

2. Establishing a Drug-Free Awareness Program to inform employees about:

   a. The dangers of drug abuse in the workplace.
   b. The contractor's policy of maintaining a drug-free workplace.
   c. Any available drug counseling, rehabilitation, and employee assistance program.
   d. The penalties that may be imposed upon employees for drug abuse violations occurring in the workplace.

3. Notify employees that as a condition of employment under this Agreement, employees will be expected to:

   a. Abide by the terms of the statement.
   b. Notify the employer of any criminal drug statute conviction for a violation occurring in the workplace.

4. Making it a requirement that each employee to be engaged in the performance of the Agreement be given a copy on the "Drug-Free Workplace" statement.

5. Taking one of the following appropriate actions, within thirty (30) days of receiving notice from an employee or otherwise receiving such notice, that said employee has received a drug conviction for a violation occurring in the workplace:

   a. Taking appropriate disciplinary action against such an employee, up to and including termination; or
   b. Requiring such employee to participate satisfactorily in a drug abuse assistance or rehabilitation program approved for such purposes by a federal, state, or local health, law enforcement or other appropriate agency.

* I certify that no person employed by this company, corporation, or business has been convicted of any criminal drug statute violation on any job site or project where this company, corporation or business was performing was within three years of the date of my signature below.

EXCEPTION: _____ None _____ _____
Date **Violation Type** **Place of Occurrence**

If additional space is required use back of this form.

*** The above statement will also be incorporated as a part of each subcontract agreement for any and all subcontractors selected for performance on this project.**

IN THE EVENT THIS COMPANY, CORPORATION, OR BUSINESS IS AWARDED THIS CONSTRUCTION AGREEMENT, AS A RESULT OF THIS BID; T HE CONTRACTOR WITH HIS/HER SIGNATURE REPRESENTS TO THE CITY THAT THE INFORMATION DISCLOSED IN THIS DOCUMENT IS COMPLETE AND ACCURATE. IT IS UNDERSTOOD AND AGREED THAT FALSE CERTIFICATION IS SUBJECT TO IMMEDIATE TERMINATION BY THE CITY.

The Representations Made Herein On This Document Are Made Under Penalty Of Perjury.

CONTRACTOR'S NAME: B & M Builders Inc

BY: _____ V. Pres. **Date:** Jan 9, 2014
Signature **Title**

Effects of violations: a. Suspension of payments under the Agreement. **b.** Suspension or termination of the Agreement. **c.** Suspension or debarment of the contractor from receiving any Agreement from the City of Sacramento for a period not to exceed five years.

The Bidder shall list the name and address of each subcontractor to whom the Bidder proposes to subcontract portions of the work.

LIST OF SUBCONTRACTORS

Name and Address	Description of Portion of Work Subcontracted	Dollar Value Of Work Provided
STUDEBAKER BROWN ELECTRIC 2008 OPPORTUNITY DR. ROSVILE CA. 95678	ELECTRICAL	189,000
CPM 9330 ELDER CREEK RD. SACRAMENTO CA 95829	SLURRY	29,000
ASPEN LANDSCAPING INC 8727 BUNTING CT. ORANGVALE CA. 95662	LANDSCAPING	36,680
PISOR FENCE P.O. BOX 7213 CITRUS HEIGHTS 95621	Fence, Hand rail	40,492
B&B Asphalt 6610 Asher Ln. SACRAMENTO CA. 95828	Asphalt	128,000
Sierra Striping 9725 Del Rd Roseville CA. 95747	Stripping	45,142
Harrison Concrete Cutting 33522 Co Rd. 24 Woodland CA 95695	Demo	40,000
ABSL - 8435 24th Street Sac. CA 95826	Grinding	5,000
West Coast Water & Trucking - ELDORADO CA.	trucking	71,250

REQUIREMENTS FOR THE NON-DISCRIMINATION IN EMPLOYEE BENEFITS BY CITY CONTRACTORS ORDINANCE

INTRODUCTION

The Sacramento Non-Discrimination In Employee Benefits By City Contractors Ordinance (the "Ordinance"), codified as Sacramento City Code Chapter 3.54, prohibits City contractors from discriminating in the provision of employee benefits between employees with spouses and employees with domestic partners, and between the spouses and domestic partners of employees.

APPLICATION

The provisions of the Ordinance apply to any contract or agreement (as defined below), between a Contractor and the City of Sacramento, in an amount exceeding $25,000.00. The Ordinance applies to that portion of a contractor's operations that occur: (i) within the City of Sacramento; (ii) on real property outside the City of Sacramento if the property is owned by the City or if the City has a right to occupy the property; or (iii) at any location where a significant amount of work related to a City contract is being performed. The provisions apply only to those employee(s) actually working on the City contract and only for the actual amount of time the employee(s) spend working on such contract.

The Ordinance does not apply: to subcontractors or subcontracts of any Contractor or contractors; to transactions entered into pursuant to cooperative purchasing agreements approved by the Sacramento City Council; to legal contracts of other governmental jurisdictions or public agencies without separate competitive bidding by the City; where the requirements of the ordinance will violate or are inconsistent with the terms or conditions of a grant, subvention or agreement with a public agency or the instructions of an authorized representative of any such agency with respect to any such grant, subvention or agreement; to permits for excavation or street construction; or to agreements for the use of City right-of-way where a contracting utility has the power of eminent domain.

DEFINITIONS

As set forth in the Ordinance, the following definitions apply:

"Contract" means an agreement for public works or improvements to be performed, or for goods or services to be purchased or grants to be provided, at the expense of the City or to be paid out of moneys deposited in the treasury or out of the trust money under the control or collected by the City. "Contract" also means a written agreement for the exclusive use ("exclusive use" means the right to use or occupy real property to the exclusion of others, other than the right reserved by the fee owner) or occupancy of real property for a term exceeding 29 days in any calendar year, whether by singular or cumulative instrument, (i) for the operation or use by others of real property owned or controlled by the City for the operation of a business, social, or other establishment or organization, including leases, concessions, franchises and easements, or (ii) for the City's use or occupancy of real property owned by others, including leases, concessions, franchises and easements.

"Contract" shall not include: a revocable at-will use or encroachment permit for the use of or encroachment on City property regardless of the ultimate duration of such permit; excavation, street construction or street use permits; agreements for the use of City right-of-way where a contracting utility has the power of eminent domain; or agreements governing the use of City property that constitute a public forum for activities that are primarily for the purpose of espousing or advocating causes or ideas and that are generally protected by the First Amendment to the United States Constitution or that are primarily recreational in nature.

"Contractor" means any person or persons, firm partnership or corporation, company, or combination thereof, that enters into a Contract with the City. "Contractor" does not include a public entity.

"Domestic Partner" means any person who has a currently registered domestic partnership with a governmental entity pursuant to state or local law authorizing the registration.

"Employee Benefits" means bereavement leave; disability, life, and other types of insurance; family medical leave; health benefits; membership or membership discounts; moving expenses; pension and retirement benefits; vacation; travel benefits; and any other benefit given to employees. "Employee benefits" shall not include benefits to the extent that the application of the requirements of this chapter to such benefits may be preempted by federal or state.

CONTRACTOR'S OBLIGATION TO PROVIDE THE CITY WITH DOCUMENTATION AND INFORMATION

Contractor shall provide the City with documentation and information verifying its compliance with the requirements of the Ordinance within ten (10) days of receipt of a request from the City. Contractors shall keep accurate payroll records, showing, for each City Contract, the employee's name, address, Social Security number, work classification, straight time pay rate, overtime pay rate, overtime hours worked, status and exemptions, and benefits for each day and pay period that the employee works on the City Contract. Each request for payroll records shall be accompanied by an affidavit to be completed and returned by the Contractor, as stated, attesting that the information contained in the payroll records is true and correct, and that the Contractor has complied with the requirements of the Ordinance. A violation of the Ordinance or noncompliance with the requirements of the Ordinance shall constitute a breach of contract.

EMPLOYER COMPLIANCE CERTIFICATE AND NOTICE REQUIREMENTS

(a) All contractors seeking a Contract subject to the Ordinance shall submit a completed Declaration of Compliance Form (attachment "A"), signed by an authorized representative, with each proposal, bid or application. The Declaration of Compliance shall be made a part of the executed contract, and will be made available for public inspection and copying during regular business hours.

(b) The Contractor shall give each existing employee working directing on a City contract, and (at the time of hire), each new employee, a copy of the notification provided as attachment "B."

(c) Contractor shall post, in a place visible to all employees, a copy of the notice provided as attachment "C."

DECLARATION OF COMPLIANCE
Equal Benefits Ordinance

B & M Builders Inc
Name of Contractor

11151 Trade Center Dr. #200 Rancho Cordova CA
Address

The above named contractor ("Contractor") hereby declares and agrees as follows:

1. I have read and understand the Non-Discrimination In Employee Benefits By City Contractors Ordinance ("Ordinance") provided to me by the City of Sacramento ("City") in connection with the City's request for proposals or other solicitations for the performance of services, or for the provision of commodities, under a City contract or agreement ("Contract").

2. As a condition of receiving the City Contract, I agree to fully comply with the requirements of the Ordinance, codified as Chapter 3. 54 of the Sacramento City Code.

3. If the face amount of this City Contract is less than $25,000, as a condition of receiving this Contract, I agree to notify the City in writing if the aggregate value of the City Contract referenced herein, after changes, modifications, or similar actions, equals or exceeds $25,000 in total value.

4. I understand, to the extent that such benefits are not preempted or prohibited by federal or state law, employee benefits covered by the Ordinance, are any of the following:

   a. Bereavement Leave
   b. Disability, life, and other types of insurance
   c. Family medical leave
   d. Health benefits
   e. Membership or membership discounts
   f. Moving expenses
   g. Pension and retirement benefits
   h. Vacation
   i. Travel benefits
   j. Any other benefit offered to employees

   I agree that should I offer any of the above listed employee benefits, that I will offer those benefits, without discrimination between employees with spouses and employees with domestic partners, and without discrimination between the spouses and domestic partners of such employees.

5. I understand that I will not be considered to be discriminating in the provision or application of employee benefits under the following conditions or circumstances:

DECLARATION OF COMPLIANCE
Equal Benefits Ordinance

a. In the event that the actual cost of providing a benefit to a domestic partner or spouse, exceeds the cost of providing the same benefit to a spouse or domestic partner of an employee, I will not be required to provide the benefit, nor shall it be deemed discriminatory, if I require the employee to pay the monetary difference in order to provide the benefit to the domestic partner or to the spouse.

b. In the event I am unable to provide a certain benefit, despite taking reasonable measures to do so, if I provide the employee with a cash equivalent, I will not be deemed to be discriminating in the application of that benefit.

c. If I provide employee benefits neither to employee's spouses nor to employee's domestic partners.

d. If I provide employee benefits to employees on a basis unrelated to marital or domestic partner status.

e. If I submit, to the Program Coordinator, written evidence of making reasonable efforts to end discrimination in employee benefits by implementing policies which are to be enacted before the first effective date after the first open enrollment process following the date the Contract is executed with the City.

   I understand that any delay in the implementation of such policies may not exceed one (1) year from the date the Contract is executed with the City, and applies only to those employee benefits for which an open enrollment process is applicable.

f. Until administrative steps can be taken to incorporate, in the infrastructure, nondiscrimination in employee benefits

   The time allotted for these administrative steps will apply only to those employee benefits for which administrative steps are necessary and may not exceed three (3) months from the date the Contract is executed with the City.

g. Until the expiration of a current collective bargaining agreement(s) where, in fact, employee benefits are governed by a collective bargaining agreement(s).

h. I take all reasonable measures to end discrimination in employee benefits by either requesting the union(s) involved agree to reopen the agreement(s) in order for me to take whatever steps are necessary to end discrimination in employee benefits or by my ending discrimination in employee benefits without reopening the collective bargaining agreement(s).

i. In the event I cannot end discrimination in employee benefits despite taking all reasonable measures to do so, I provide a cash equivalent to eligible employees for whom employee benefits (as listed previously), are not available.

Unless otherwise authorized in writing by the City Manager, I understand this cash equivalent must begin at the time the union(s) refuse to allow the collective bargaining agreement(s) to be reopened or no longer than three (3) months from the date the Contract is executed with the City.

6. I understand that failure to comply with the provisions of Section 5. (a) through 4. (i), above, will subject me to possible suspension and/or termination of this Contract for cause; repayment of any or all of the Contract amount disbursed by the City; debarment for future contracts until all penalties and restitution have been paid in full; deemed ineligible for future contracts for up to two (2) years; the imposition of a penalty, payable to the City, in the sum of $50.00 for each employee, for each calendar day during which the employee was discriminated against in violation of the provisions of the Ordinance.

7. I understand and do hereby agree to provide each current employee and, within ten (10) days of hire, each new employee, of their rights under the Ordinance. I further agree to maintain a copy of each such letter provided, in an appropriate file for possible inspection by an authorized representative of the City. I also agree to prominently display a poster informing each employee of these rights.

8. I understand that I have the right to request an exemption to the benefit provisions of the Ordinance when such a request is submitted to the Procurement Services Division, in writing with sufficient justification for resolution, prior to contract award.

   I further understand that the City may request a waiver or exemption to the provisions or requirements of the Ordinance, when only one contractor is available to enter into a contract or agreement to occupy and use City property on terms and conditions established by the City; when sole source conditions exist for goods, services, public project or improvements and related construction services; when there are no responsive bidders to the EBO requirements and the contract is for essential goods or services; when emergency conditions with public health and safety implications exist; or when the contract is for specialized legal services if in the best interest of the City.

9. In consideration of the foregoing, I shall defend, indemnify and hold harmless, the City, its officers and employees, against any claims, actions, damages, costs (including reasonable attorney fees), or other liabilities of any kind arising from any violation of the City's Equal Benefits Requirements or of the Ordinance by me.

DECLARATION OF COMPLIANCE
Equal Benefits Ordinance

I declare under penalty of perjury under the laws of the State of California that the foregoing is true and correct, and that I am authorized to bind the Contractor to the provisions of this Declaration.

Signature of Authorized Representative

1/9/14
Date

Jonathan Brown
Print Name

Vice President
Title

YOUR RIGHTS UNDER THE CITY OF SACRAMENTO'S NON-DISCRIMINATION IN EMPLOYEE BENEFITS BY CITY CONTRACTORS ORDINANCE

On 1/9/19 ..... (date), your employer (the "Employer") entered into a contract with the City of Sacramento (the "City") for ..... (contract details), and as a condition of that contract, agreed to abide by the requirements of the City's Non-Discrimination In Employee Benefits By City Contractors Ordinance (Sacramento City Code Section 3.54).

The Ordinance does not require the Employer to provide employee benefits. The Ordinance does require that if certain employee benefits are provided by the Employer, that those benefits be provided without discrimination between employees with spouses and employees with domestic partners, and without discrimination between the spouse or domestic partner of employees.

The Ordinance covers any employee working on the specific contract referenced above, but only for the period of time while those employees are actually working on this specific contract.

The included employee benefits are:

- Bereavement leave
- Disability, life and other types of insurance
- Family medical leave
- Health benefits
- Membership or membership discounts
- Moving expenses
- Pension and retirement benefits
- Vacation
- Travel benefits
- Any other benefits given to employees

(Employee Benefits does not include benefits that may be preempted by federal or state law.)

If you feel you have been discriminated or retaliated against by your employer in the terms and conditions of your application for employment, or in your employment, or in the application of these employee benefits, because of your status as an applicant or as an employee protected by the Ordinance, or because you reported a violation of the Ordinance, and after having exhausted all remedies with your employer,

You May . . .

- Submit a written complaint to the City of Sacramento, Contract Services Unit, containing the details of the alleged violation. The address is:

  City of Sacramento
  Contract Services Unit
  5730 24th St, Bldg 1
  Sacramento, CA 95822

- Bring an action in the appropriate division of the Superior Court of the State of California against the Employer and obtain the following remedies:

  - Reinstatement, injunctive relief, compensatory damages and punitive damages

  - Reasonable attorney's fees and costs

YOUR RIGHTS UNDER THE CITY OF SACRAMENTO'S NON-DISCRIMINATION IN EMPLOYEE BENEFITS BY CITY CONTRACTORS ORDINANCE

If your employer provides employee benefits, they must be provided to those employees working on a City of Sacramento contract without discriminating between employees with spouses and employees with domestic partners.

The included employee benefits are:

- Bereavement leave
- Disability, life and other types of insurance
- Family medical leave
- Health benefits
- Membership or membership discounts
- Moving expenses
- Pension and retirement benefits
- Vacation
- Travel benefits
- Any other benefits given to employees

If you feel you have been discriminated against by your employer . . .

You May . . .

- Submit a written complaint to the City of Sacramento, Contract Services Unit, containing the details of the alleged violation. The address is:

  City of Sacramento
  Contract Services Unit
  5730 24TH St, Bldg 1
  Sacramento, CA 95822

- Bring an action in the appropriate division of the Superior Court of the State of California against the employer and obtain reinstatement, injunctive relief, compensatory damages, punitive damages and reasonable attorney's fees and costs.

Discrimination and Retaliation Prohibited.

If you feel you have been discriminated or retaliated against by your employer in the terms and conditions of your application for employment, or in your employment, because of your status as an applicant or as an employee protected by the Ordinance, or because you reported a violation of this Ordinance . . .

You May Also . . .

Submit a written complaint to the City of Sacramento, Contract Services Unit, at the same address, containing the details of the alleged violation.

MINIMUM QUALIFICATIONS QUESTIONNAIRE

Sacramento City Code Section 3.60.020 authorizes the Sacramento City Council to adopt standard minimum qualifications for bidders on competitively bid public works construction projects, and requires, among other provisions, that a bidder meet such minimum qualifications at the time of bid opening in order to bid. On July 31, 2007, the City Council adopted Resolution No. 2007-574 establishing these standard minimum qualifications. Pursuant to City Code section 3.60.020, a bidder failing to meet these minimum qualifications at the time of bid opening shall not be considered a responsible bidder for purposes of bidding on the subject project.

All bidders must demonstrate compliance with the minimum qualifications established by Resolution No. 2007-574 by completing all of the questions contained in this questionnaire. Bidder responses shall be limited to those operating business units, offices, branches and/or subsidiary divisions of the bidder that will be involved with the performance of any project work if awarded the contract. If a bidder answers "yes" to any single question, fails to submit a fully completed questionnaire, or submits false information, this will result in a determination that the minimum qualifications are not met, and the bidder shall not be considered a qualified bidder for purposes of bidding on this contract. If two or more entities submit a bid on a contract as a Joint Venture, each entity within the Joint Venture must separately meet these minimum qualifications for the Joint Venture to be considered a qualified bidder.

The City of Sacramento ("City") shall make its determination on the basis of the submitted questionnaire, as well as any relevant information that is obtained from others or as a result of investigation by the City. While it is the intent of this questionnaire to assist the City in determining whether bidders possess the minimum qualifications necessary to submit bids on the City's competitively bid public works construction contracts, the fact that a bidder submits a questionnaire demonstrating that it meets these minimum qualifications shall not in any way limit or affect the City's ability to: (1) review other information contained in the bid submitted by the bidder, and additional relevant information, and determine whether the contractor is a responsive and/or responsible bidder; or (2) establish pre-qualification requirements for a specific contract or contracts.

By submitting this questionnaire, the bidder consents to the disclosure of its questionnaire answers: (i) to third parties for purposes of verification and investigation; (ii) in connection with any protest, challenge or appeal of any action taken by the City; and (iii) as required by any law or regulation, including without limitation the California Public Records Act (Calif. Gov't Code sections 6250 et seq.). Each questionnaire must be signed under penalty of perjury in the manner designated at the end of the fom, by an individual who has the legal authority to bind the bidder submitting the questionnaire. If any information provided by a bidder becomes inaccurate, the bidder shall immediately notify the City and provide updated accurate information in writing, under penalty of perjury.

FOR CITY CLERK USE ONLY

RESOLUTION NO.: 2007-574

DATE ADOPTED: July 31, 2007

CALFIRONIA LABOR CODE RELATING TO APPRENTICES ON PUBLIC WORKS PROJECTS

See following links: www.dir.ca.gov and/or www.leginfo.ca.gov

CITY/COUNTY OF Sacramento

DATA UNIVERSAL NUMBERING SYSTEM (D-U-N-S) NUMBER

Submit this form with the Executed Contract. If you fail to submit your D-U-N-S Number, the Department will not approve the contract

CONTRACT NUMBER: T15029031

CONTRACTOR NAME: B&M Builders Inc

BUSINESS ADDRESS (D-U-N-S Number Location):

STREET: 11151 Trade Center Dr. #200

CITY: Rancho Cordova

STATE: CA

ZIP CODE: 95670

D-U-N-S Number: N/A

Contact Name: T15029031

Telephone No: 916 862-0095

QUESTIONNAIRE

NOTICE: **For firms that maintain other operating business units, offices, branches and/or subsidiary divisions that will not be involved with the performance of any project work if the firm is awarded the contract, references hereafter to "your firm" shall mean only those operating business units, offices, branches and/or subsidiary divisions that will be involved with the performance of any project work.**

All of the following questions regarding "your firm" refer to the firm (corporation, partnership or sole proprietor) submitting this questionnaire, as well as any firm(s) with which any of your firm's owners, officers, or partners are or have been associated as an owner, officer, partner or similar position within the last five years

The firm submitting this questionnaire shall not be considered a responsible bidder if the answer to any of these questions is " yes", or if the firm submits a questionnaire that is not fully completed or contains false information.

1. **Classification & Expiration Date(s) of California** Contractor's License Number(s) held by firm:

   861848

2. Has a contractor's license held by your firm and/or any owner, officer or partner of your firm been revoked at anytime in the last five years?

   ☐ Yes ☑ No

3. Within the last five years, has a surety firm completed a contract on your firm's behalf, or paid for completion of a contract to which your firm was a party, because your firm was considered to be in default or was terminated for cause by the project owner?

   ☐ Yes ☑ No

4. At the time of submitting this minimum qualifications questionnaire, is your firm ineligible to bid on or be awarded a public works contract, or perform as a subcontractor on a public works contract, pursuant to either California Labor Code section 1777.1 (prevailing wage violations) or Labor Code section 1777.7 (apprenticeship violations)?

   ☐ Yes ☑ No

5. At any time during the last five years, has your firm, or any of its owners, officers or partners been convicted of a crime involving the awarding of a contract for a government construction project, or the bidding or performance of a government contract?

   ☐ Yes ☑ No

FOR CITY CLERK USE ONLY

RESOLUTION NO.: 2007-574

DATE ADOPTED: July 31, 2007

6. Answer either subsection A or B, as applicable:

A. Your firm has completed three or more government construction contracts in Sacramento County within the last five years: Within those five years, has your firm been assessed liquidated damages on three or more government construction contracts in Sacramento County for failure to complete contract work on time?

NOTE: If there is a pending administrative or court action challenging the assessment of liquidated damages on a government contract within the last five years, you need not include that contract in responding to this question.

☐ Yes ☑ No ☐ Not applicable

OR

B. Your firm has not completed at least three government construction contracts in Sacramento County within the last five years: Within the last three years, has your firm been assessed liquidated damages on three or more government construction contracts for failure to complete contract work on time?

NOTE: If there is a pending administrative or court action challenging an assessment of liquidated damages on a government contract within the last three years, you need not include that contract in responding to this question.

☐ Yes ☐ No ☐ Not applicable

7. In the last three years has your firm been debarred from bidding on, or completing, any government agency or public works construction contract for any reason?

NOTE: If there is a pending administrative or court action challenging a debarment, you need not include that debarment in responding to this question.

☐ Yes ☑ No

8. Has CAL OSHA assessed a total of three or more penalties against your firm for any "serious" or "willful" violation occurring on construction projects performed in Sacramento County at any time within the last three years?

NOTE: If there is a pending administrative or court action appealing a penalty assessment, you need not include that penalty assessment in responding to this question.

☐ Yes ☑ No

FOR CITY CLERK USE ONLY

RESOLUTION NO.: 2007-574

DATE ADOPTED: July 31, 2007

9. Answer either subsection A or B, as preferred:

A. In the last three years has your firm had a thr ee year average Workers' Compensation experience modification rate exceeding 1.1?

☐ Yes ☑ No

OR

B. In the last three years has your firm had a three-year average incident rate for total lost workday cases exceeding 10?

NOTE: Incident rates represent the number of lost workday cases per 100 full-time workers and is to be calculated as: (N/EH) x 200,000, where

N	=	**num ber of lost workday cases (as defined by the U.S. Dept. of Labor, Bureau of Labor Statistics)**
EH	=	**total hours worked by all employees during the calendar year**
200,000	=	**base for 100 equivalent full-time working (working 40 hours per week, 50 weeks per year)**

☐ Yes ☐ No

10. In the past three years, has the federal EPA, Region IX or a California Air Quality Management District or Regional Water Quality Control Board assessed penalties three or more times, either against your firm, or against the project owner for a violation resulting in whole or in part from any action or omission by your firm on a project on which your firm was a contractor in Sacramento County?

NOTE: If there is a pending administrative or court action appealing a penalty assessment, you need not include that penalty assessment in responding to this question.

☐ Yes ☑ No

FOR CITY CLERK USE ONLY

RESOLUTION NO.: 2007-574

DATE ADOPTED: July 31, 2007

11. In the past three years, has the federal EPA, Region IX or a California Air Quality Management District or Regional Water Quality Control Board assessed a single penalty of $100,000 or more, either against your firm, or against the project owner for a violation resulting in whole or in part from any action or omission by your firm on a project on which your firm was the contractor in Sacramento County?

NOTE: If there is a pending administrative or court action appealing a penalty assessment, you need not include that penalty assessment in responding to this question.

☐ Yes ☑ No

12. In the past three years, have civil penalties been assessed against your firm pursuant to California Labor Code 1777.7 for violation of California public works apprenticeship requirements, three or more times?

NOTE: If there is a pending administrative or court action appealing a penalty assessment, you need not include that penalty assessment in responding to this question.

☐ Yes ☑ No

13. In the past three years, has a public agency in California withheld contract payments or assessed penalties against your firm for violation of public works prevailing wage requirements, three or more times?

NOTE: If there is a pending administrative or court action appealing a withholding or penalty assessment, you need not include t hat withholding or penalty assessment in responding to this question.

☐ Yes ☑ No

14. Has your firm been assessed penalties for violation of public works prevailing wage requirements in California, in an aggregate amount for the past three years of $50,000 or more?

NOTE: If there is a pending administrative or court action appealing a penalty assessment, you need not include that penalty assessment in responding to this question.

☐ Yes ☑ No

FOR CITY CLERK USE ONLY

RESOLUTION NO.: 2007-574

DATE ADOPTED: July 31, 2007

VERIFICATION AND SIGNATURE

I, the undersigned, certify and declare that I have read all the foregoing answers to this Minimum Qualifications Questionnaire, and know their contents. The m atters stated in these Questionnaire answers are true of my own knowledge and belief, except as to those matters stated on information and belief, and as to those matters I believe them to be true. I dedare under penalty of perjury under the laws of the State of California that the foregoing is true and correct.

Signed at Rancho Cordova, CA, on 1/9/14.
(Location) (Date)

Signature: [signature]

Print name: Jonathan Brown

Title: Vice President

NOTE: If two or more entities submit a bid on a contract as a Joint Venture, each entity within the Joint Venture must submit a separate Minimum Qualifications Questionnaire.

FOR CITY CLERK USE ONLY

RESOLUTION NO.: 2007-574

DATE ADOPTED: July 31, 2007

EQUAL EMPLOYMENT OPPORTUNITY CERTIFICATION

The bidder B & M Builders, proposed subcontractor attached see Page 181, hereby certifies that he has ✓, has not ___, participated in a previous contract or subcontract subject to the equal opportunity clauses, as required by Executive Orders 10925, 11114, or 11246, and that, where required, he has filed with the Joint Reporting Committee, the Director of the Office of Federal Contract Compliance, a Federal Government contracting or administering agency, or the former President's Committee on Equal Employment Opportunity, all reports due under the applicable filling requirements.

Note: The above certification is required by the Equal Employment Opportunity Regulations of the Secretary of Labor (41 CFR 60-1.7(b) (1)), and must be submitted by bidders and proposed subcontractors only in connection with contracts and subcontracts which are subject to the equal opportunity clause. Contracts and subcontracts which are exempt from the equal opportunity clause are set forth in 41 CFR 60-1.5. (Generally only contracts or subcontracts of $10,000 or under are exempt.)

Currently, Standard Form 100 (EEO-1) is the only report required by the Executive Orders or their implementing regulations.

Proposed prime contractors and subcontractors who have participated in a previous contract or subcontract subject to the Executive Orders and have not filed the required reports should note that 41 CFR 60-1.7(b) (1) prevents the award of contracts and subcontracts unless such contractor submits a report covering the delinquent period or such other period specified by the Federal Highway Administration or by the Director, Office of Federal Contract Compliance, U.S. Department of Labor.

PUBLIC CONTRACT CODE

Public Contract Code Section 10285.1 Statement

In conformance with Public Contract Code Section 10285.1 (Chapter 376, Stats. 1985), the bidder hereby declares under penalty of perjury under the laws of the State of California that the bidder has ___ , has not ✓ been convicted within the preceding three years of any offenses referred to in that section, including any charge of fraud, bribery, collusion, conspiracy, or any other act in violation of any state or Federal antitrust law in connection with the bidding upon, award of, or performance of, any public works contract, as defined in Public Contract Code Section 1101, with any public entity, as defined in Public Contract Code Section 1100, including the Regents of the University of California or the Trustees of the California State University. The term "bidder" is understood to include any partner, member, officer, director, responsible managing officer, or responsible managing employee thereof, as referred to in Section 10285.1.

Note: The bidder must place a check mark after "has" or "has not" in one of the blank spaces provided. The above Statement is part of the Proposal. Signing this Proposal on the signature portion thereof shall also constitute signature of this Statement. Bidders are cautioned that making a false certification may subject the certifier to criminal prosecution.

Public Contract Code Section 10162 Questionnaire

In conformance with Public Contract Code Section 10162, the Bidder shall complete, under penalty of perjury, the following questionnaire:

Has the bidder, any officer of the bidder, or any employee of the bidder who has a proprietary interest in the bidder, ever been disqualified, removed, or otherwise prevented from bidding on, or completing a federal, state, or local government project because of a violation of law or a safety regulation?

Yes ____ No ✓

If the answer is yes, explain the circumstances in the following space.

Public Contract Code 10232 Statement

In conformance with Public Contract Code Section 10232, the Contractor, hereby states under penalty of perjury, that no more than one final unappealable finding of contempt of court by a federal court has been issued against the Contractor within the immediately preceding two year period because of the Contractor's failure to comply with an order of a federal court which orders the Contractor to comply with an order of the National Labor Relations Board.

Note: The above Statement and Questionnaire are part of the Proposal. Signing this Proposal on the signature portion thereof shall also constitute signature of this Statement and Questionnaire.
Bidders are cautioned that making a false certification may subject the certifier to criminal prosecution.

Noncollusion Affidavit

(Title 23 United States Code Section 112 and
Public Contract Code Section 7106)

To the CITY / COUNTY of Sacramento
DEPARTMENT OF PUBLIC WORKS.

In conformance with Title 23 United States Code Section 112 and Public Contract Code 7106 the bidder declares that the bid is not made in the interest of, or on behalf of, any undisclosed person, partnership, company, association, organization, or corporation; that the bid is genuine and not collusive or sham; that the bidder has not directly or indirectly induced or solicited any other bidder to put in a false or sham bid, and has not directly or indirectly colluded, conspired, connived, or agreed with any bidder or anyone else to put in a sham bid, or that anyone shall refrain from bidding; that the bidder has not in any manner, directly or indirectly, sought by agreement, communication, or conference with anyone to fix the bid price of the bidder or any other bidder, or to fix any overhead, profit, or cost element of the bid price, or of that of any other bidder, or to secure any advantage against the public body awarding the contract of anyone interested in the proposed contract; that all statements contained in the bid are true; and, further, that the bidder has not, directly or indirectly, submitted his or her bid price or any breakdown thereof, or the contents thereof, or divulged information or data relative thereto, or paid, and will not pay, any fee to any corporation, partnership, company association, organization, bid depository, or to any member or agent thereof to effectuate a collusive or sham bid.

Note: The above Noncollusion Affidavit is part of the Proposal. Signing this Proposal on the signature portion thereof shall also constitute signature of this Noncollusion Affidavit.
Bidders are cautioned that making a false certification may subject the certifier to criminal prosecution.

DEBARMENT AND SUSPENSION CERTIFICATION

TITLE 49, CODE OF FEDERAL REGULATIONS, PART 29

The bidder, under penalty of perjury, certifies that, except as noted below, he/she or any other person associated therewith in the capacity of owner, partner, director, officer, manager:

- is not currently under suspension, debarment, voluntary exclusion, or determination of ineligibility by any Federal agency;
- has not been suspended, debarred, voluntarily excluded or determined ineligible by any Federal agency within the past 3 years;
- does not have a proposed debarment pending; and
- has not been indicted, convicted, or had a civil judgement rendered against it by a court of competent jurisdiction in any matter involving fraud or official misconduct within the past 3 years.

If there are any exceptions to this certification, insert the exceptions in the following space.

Exceptions will not necessarily result in denial of award, but will be considered in determining bidder responsibility. For any exception noted above, indicate below to whom it applies, initiating agency, and dates of action.

Notes: Providing false information may result in criminal prosecution or administrative sanctions.
The above certification is part of the Proposal. Signing this Proposal on the signature portion thereof shall also constitute signature of this Certification.

NONLOBBYING CERTIFICATION FOR FEDERAL-AID CONTRACTS

The prospective participant certifies, by signing and submitting this bid or proposal, to the best of his or her knowledge and belief, that:

(1) No Federal appropriated funds have been paid or will be paid, by or on behalf of the undersigned, to any person for influencing or attempting to influence an officer or employee of any Federal agency, a Member of Congress, an officer or employee of Congress, or an employee of a Member of Congress in connection with the awarding of any Federal contract, the making of any Federal grant, the making of any Federal loan, the entering into of any cooperative agreement, and the extension, continuation, renewal, amendment, or modification of any Federal contract, grant, loan, or cooperative agreement.

(2) If any funds other than Federal appropriated funds have been paid or will be paid to any person for influencing or attempting to influence an officer or employee of any Federal agency, a Member of Congress, an officer or employee of Congress, or an employee of a Member of Congress in connection with this Federal contract, grant, loan, or cooperative agreement, the undersigned shall complete and submit Standard Form-LLL, "Disclosure of Lobbying Activities," in conformance with its instructions.

This certification is a material representation of fact upon which reliance was placed when this transaction was made or entered into. Submission of this certification is a prerequisite for making or entering into this transaction imposed by Section 1352, Title 31, U.S. Code. Any person who fails to file the required certification shall be subject to a civil penalty of not less than $10,000 and not more than $100,000 for each such failure.

The prospective participant also agrees by submitting his or her bid or proposal that he or she shall require that the language of this certification be included in all lower tier subcontracts, which exceed $100,000 and that all such subrecipients shall certify and disclose accordingly.

DISCLOSURE OF LOBBYING ACTIVITIES

COMPLETE THIS FORM TO DISCLOSE LOBBYING ACTIVITIES PURSUANT TO 31 U.S.C. 1352

1. Type of Federal Action:

☐ a. contract
b. grant
c. cooperative agreement
d. loan
e. loan guarantee
f. loan insurance

N/A

2. Status of Federal Action:

☐ a. bid/offer/application
b. initial award
c. post-award

3. Report Type:

☐ a. initial
b. material change

For Material Change Only:
year ____ quarter _____
date of last report _____

4. Name and Address of Reporting Entity

☐ Prime ☐ Subawardee
Tier _____ , if known

Congressional District, if known

5. If Reporting Entity in No. 4 is Subawardee, Enter Name and Address of Prime:

Congressional District, if known

6. Federal Department/Agency:

7. Federal Program Name/Description:

CFDA Number, if applicable _____

8. Federal Action Number, if known:

9. Award Amount, if known:

10. a. Name and Address of Lobby Entity
(If individual, last name, first name, MI)

b. Individuals Performing Services (including address if different from No. 10a)
(last name, first name, MI)

(attach Continuation Sheet(s) if necessary)

11. Amount of Payment (check all that apply)

$ _____ ☐ actual ☐ planned

12. Form of Payment (check all that apply):

☐ a. cash
☐ b. in-kind; specify: nature _____
value _____

13. Type of Payment (check all that apply)

☐ a. retainer
☐ b. one-time fee
☐ c. commission
☐ d. contingent fee
☐ e deferred
☐ f. other, specify _____

14. Brief Description of Services Performed or to be performed and Date(s) of Service, including officer(s), employee(s), or member(s) contacted, for Payment Indicated in Item 11:

(attach Continuation Sheet(s) if necessary)

15. Continuation Sheet(s) attached: **Yes** ☐ **No** ☐

16. Information requested through this form is authorized by Title 31 U.S.C. Section 1352. This disclosure of lobbying reliance was placed by the tier above when his transaction was made or entered into. This disclosure is required pursuant to 31 U.S.C. 1352. This information will be reported to Congress semiannually and will be available for public inspection. Any person who fails to file the required disclosure shall be subject to a civil penalty of not less than $10,000 and not more than $100,000 for each such failure.

Signature: [signature]
Print Name: Jonathan Brown
Title: Vice President
Telephone No.: 916 869-8025 Date: 1/9/14

Authorized for Local Reproduction
Standard Form - LLL

Federal Use Only:

Standard Form LLL Rev. 09-12-97

INSTRUCTIONS FOR COMPLETION OF SF-LLL, DISCLOSURE OF LOBBYING ACTIVITIES

This disclosure form shall be completed by the reporting entity, whether subawardee or prime Federal recipient, at the initiation or receipt of covered Federal action or a material change to previous filing pursuant to title 31 U.S.C. section 1352. The filing of a form is required for such payment or agreement to make payment to lobbying entity for influencing or attempting to influence an officer or employee of any agency, a Member of Congress an officer or employee of Congress or an employee of a Member of Congress in connection with a covered Federal action. Attach a continuation sheet for additional information if the space on the form is inadequate. Complete all items that apply for both the initial filing and material change report. Refer to the implementing guidance published by the Office of Management and Budget for additional information.

1. Identify the type of covered Federal action for which lobbying activity is and/or has been secured to influence, the outcome of a covered Federal action.
2. Identify the status of the covered Federal action.
3. Identify the appropriate classification of this report. If this is a follow-up report caused by a material change to the information previously reported, enter the year and quarter in which the change occurred. Enter the date of the last, previously submitted report by this reporting entity for this covered Federal action.
4. Enter the full name, address, city, state and zip code of the reporting entity. Include Congressional District if known. Check the appropriate classification of the reporting entity that designates if it is or expects to be a prime or subaward recipient. Identify the tier of the subawardee, e.g., the first subawardee of the prime is the first tier. Subawards include but are not limited to subcontracts, subgrants and contract awards under grants.
5. If the organization filing the report in Item 4 checks "Subawardee" then enter the full name, address, city, state and zip code of the prime Federal recipient. Include Congressional District, if known.
6. Enter the name of the Federal agency making the award or loan commitment. Include at least one organization level below agency name, if known. For example, Department of Transportation, United States Coast Guard.
7. Enter the Federal program name or description for the covered Federal action (item 1). If known, enter the full Catalog of Federal Domestic Assistance (CFDA) number for grants, cooperative agreements, loans and loan commitments.
8. Enter the most appropriate Federal identifying number available for the Federal action identification in item 1 (e.g., Request for Proposal (RFP) number, Invitation for Bid (IFB) number, grant announcement number, the contract grant. or loan award number, the application/proposal control number assigned by the Federal agency). Include prefixes, e.g., "RFP-DE-90-001."
9. For a covered Federal action where there has been an award or loan commitment by the Federal agency, enter the Federal amount of the award/loan commitments for the prime entity identified in item 4 or 5.
10. (a) Enter the full name, address, city, state and zip code of the lobbying entity engaged by the reporting entity identified in item 4 to influenced the covered Federal action.
    (b) Enter the full names of the individual(s) performing services and include full address if different from 10 (a). Enter Last Name, First Name and Middle Initial (MI).
11. Enter the amount of compensation paid or reasonably expected to be paid by the reporting entity (item 4) to the lobbying entity (item 10). Indicate whether the payment has been made (actual) or will be made (planned). Check all boxes that apply. If this is a material change report, enter the cumulative amount of payment made or planned to be made.
12. Check the appropriate box(es). Check all boxes that apply. If payment is made through an in-kind contribution, specify the nature and value of the in-kind payment.
13. Check the appropriate box(es). Check all boxes that apply. If other, specify nature.
14. Provide a specific and detailed description of the services that the lobbyist has performed or will be expected to perform and the date(s) of any services rendered. Include all preparatory and related activity not just time spent in actual contact with Federal officials. Identify the Federal officer(s) or employee(s) contacted or the officer(s) employee(s) or Member(s) of Congress that were contacted.
15. Check whether or not a continuation sheet(s) is attached.
16. The certifying official shall sign and date the form, print his/her name title and telephone number.

Public reporting burden for this collection of information is estimated to average 30 minutes per response, including time for reviewing instruction, searching existing data sources, gathering and maintaining the data needed, and completing and reviewing the collection of information. Send comments regarding the burden estimate or any other aspect of this collection of information, including suggestions for reducing this burden, to the Office of Management and Budget, Paperwork Reduction Project (0348-0046), Washington, D.C. 20503.

SF-LLL-Instructions Rev. 06-04-90«ENDIF»

EXHIBIT 15-G LOCAL AGENCY BIDDER DBE COMMITMENT (CONSTRUCTION CONTRACTS)

NOTE: PLEASE REFER TO INSTRUCTIONS ON THE REVERSE SIDE OF THIS FORM

LOCAL AGENCY: _____ LOCATION: City of Sacramento

PROJECT DESCRIPTION: West Tunnel Ramps Access Project

TOTAL CONTRACT AMOUNT: $ 1,334,304

BID DATE: 1/29/13

BIDDER'S NAME: B&M Builders, Inc.

CONTRACT DBE GOAL: 12%

CONTRACT ITEM NO.	ITEM OF WORK AND DESCRIPTION OR SERVICES TO BE SUBCONTRACTED OR MATERIALS TO BE PROVIDED (or contracted if the bidder is a DBE)	DBE CERT NO. AND EXPIRATION DATE	NAME OF EACH DBE (Must be certified on the date bids are opened - include DBE address and phone number)	DOLLAR AMOUNT DBE
2 & 3	SWPPP Plan & Annual Reports	38300 exp. 2/4/15	Tully Consulting Group, Inc. 180 S First Street #9 Dixon Ca. 95620	$6600
50	Cold Plane Asphalt	5270 8/26/14	8435 24th Ave, Sacramento Ca. 95826	$3700
6	Clear & grub	37869	West Coast Water & Trucking	$3000
10-19	Demo			$2750
23	Roadway Ex	9/3/2014		$25,000
24	Agg Base			$7000
50	Cold Plane			$1500
51-52	HMA			$15,000
67	Pavers, sand, etc			$20,000

For Local Agency to Complete:

Local Agency Contract Number: _____

Federal-aid Project Number: _____

Federal Share: _____

Contract Award Date: _____

Total Claimed DBE Participation $ 84,550

6.3 %

Local Agency certifies that all DBE certifications have been verified and information is complete and accurate.

Jose R. Cedesma — Print Name

[signature] — Signature

4-22-14 — Date

Local Agency Representative

(Area Code) Telephone Number: 916-808-8195

[signature] — Signature of Bidder

1/29/14 — Date

916 862-0095 — (Area Code) Tel. No.

Patrick Mullen — Person to Contact (Please Type or Print)

Local Agency Bidder DBE Commitment (Construction Contracts) (Rev 6/26/09)

Distribution: (1) Copy – Fax or scan a copy to the Caltrans District Local Assistance Engineer (DLAE) within 30 days of contract execution. Failure to send a copy to the DLAE within 30 days of contract execution may result in de-obligation of funds for this project.
(2) Copy – Include in award package to Caltrans District Local Assistance
(3) Original – Local agency files

INSTRUCTIONS - LOCAL AGENCY BIDDER
DBE COMMITMENT (CONSTRUCTION CONTRACTS)

ALL BIDDERS:

PLEASE NOTE: This information may be submitted with your bid. If it is not, and you are the apparent low bidder or the second or third low bidder, it must submitted and received as specified in the Special Provisions. Failure to submit the required DBE commitment will be grounds for finding the bid nonresponsive

The form requires specific information regarding the construction contract: Local Agency, Location, Project Description, Total Contract Amount, Bid Date, Bidder's Name, and Contract DBE Goal.

The form has a column for the Contract Item Number and Item of Work and Description or Services to be Subcontracted or Materials to be provided by DBEs. Prime contractors shall indicate all work to be performed by DBEs including, if the prime is a DBE, work performed by its own forces, if a DBE. The DBE shall provide a certification number to the Contractor and expiration date. Enter the DBE prime's and subcontractors' certification numbers.The form has a column for the Names of DBE contractors to perform the work (who must be certified on the date bids are opened and include the DBE address and phone number).

IMPORTANT: Identify **all** DBE firms participating in the project regardless of tier. Names of the First-Tier DBE Subcontractors and their respective item(s) of work listed should be consistent, where applicable, with the names and items of work in the "List of Subcontractors" submitted with your bid.

There is a column for the DBE participation dollar amount. Enter the Total Claimed DBE Participation dollars and percentage amount of items of work submitted with your bid pursuant to the Special Provisions. (If 100% of item is not to be performed or furnished by the DBE, describe exact portion of time to be performed or furnished by the DBE.) See Section "Disadvantaged Business Enterprise (DBE)," of the Special Provisions (construction contracts), to determine how to count the participation of DBE firms.

Exhibit 15-G must be signed and dated by the person bidding. Also list a phone number in the space provided and print the name of the person to contact.

Local agencies should complete the Local Agency Contract Award, Federal-aid Project Number, Federal Share, Contract Award Date fields and verify that all information is complete and accurate before signing and filing.

EXHIBIT 15-H DBE INFORMATION —GOOD FAITH EFFORTS

DBE INFORMATION - GOOD FAITH EFFORTS

Federal-aid Project No. _____ Bid Opening Date 1/15/14

The _____ (City/County of) Sacramento established a Disadvantaged Business Enterprise (DBE) goal of 11.29% for this project. The information provided herein shows that a good faith effort was made.

Lowest, second lowest and third lowest bidders shall submit the following information to document adequate good faith efforts. Bidders should submit the following information even if the "Local Agency Bidder DBE Commitment" form indicates that the bidder has met the DBE goal. This will protect the bidder's eligibility for award of the contract if the administering agency determines that the bidder failed to meet the goal for various reasons, e.g., a DBE firm was not certified at bid opening, or the bidder made a mathematical error.

Submittal of only the "Local Agency Bidder DBE Commitment" form may not provide sufficient documentation to demonstrate that adequate good faith efforts were made.

The following items are listed in the Section entitled "Submission of DBE Commitment" of the Special Provisions:

A. The names and dates of each publication in which a request for DBE participation for this project was placed by the bidder (please attach copies of advertisements or proofs of publication):

Publications	Dates of Advertisement
Construction Bid Source	1/9/14
Construction Bid Source Interactive	1/9/14

B. The names and dates of written notices sent to certified DBEs soliciting bids for this project and the dates and methods used for following up initial solicitations to determine with certainty whether the DBEs were interested (please attach copies of solicitations, telephone records, fax confirmations, etc.):

Names of DBEs Solicited	Date of Initial Solicitation	Follow Up Methods and Dates
See attached		

C. The items of work which the bidder made available to DBE firms including, where appropriate, any breaking down of the contract work items (including those items normally performed by the bidder with its own forces) into economically feasible units to facilitate DBE participation. It is the bidder's responsibility to demonstrate that sufficient work to facilitate DBE participation was made available to DBE firms.

Items of Work	Bidder Normally Performs Item (Y/N)	Breakdown of Items	Amount ($)	Percentage Of Contract
All items - See attached				

D. The names, addresses and phone numbers of rejected DBE firms, the reasons for the bidder's rejection of the DBEs, the firms selected for that work (please attach copies of quotes from the firms involved), and the price difference for each DBE if the selected firm is not a DBE:

Names, addresses and phone numbers of rejected DBEs and the reasons for the bidder's rejection of the DBEs:

Excel Landscape - 916 366-6364 - price was higher than non-DBE. DBE $5820
9624 Kiefer ~~Landscape~~ Blvd
Sacramento, Ca. 95827

Names, addresses and phone numbers of firms selected for the work above:

Aspen Landscaping, Inc. 916-988-8745, 8727 Bunting Court, Orangevale, Ca. 95662

See attached for more info

E. Efforts made to assist interested DBEs in obtaining bonding, lines of credit or insurance, and any technical assistance or information related to the plans, specifications and requirements for the work which was provided to DBEs:

None was requested

F. Efforts made to assist interested DBEs in obtaining necessary equipment, supplies, materials or related assistance or services, excluding supplies and equipment the DBE subcontractor purchases or leases from the prime contractor or its affiliate:

None was requested

G. The names of agencies, organizations or groups contacted to provide assistance in contacting, recruiting and using DBE firms (please attach copies of requests to agencies and any responses received, i.e., lists, Internet page download, etc.):

Name of Agency/Organization	Method/Date of Contact	Results
None		

H. Any additional data to support a demonstration of good faith efforts (use additional sheets if necessary):

NOTE: USE ADDITIONAL SHEETS OF PAPER IF NECESSARY.

Ad ID: 10898 **Date Of Advertisement: Jan 09, 2014**

B & M Builders, Inc.

An Equal Opportunity Employer is requesting quotations from all qualified **DBE, UDBE** sub-contractors and/or material suppliers for the following project

Project Title:	West Tunnel Ramps Access Project, Sacramento
Project Location:	Sacramento, Ca Located in Sacramento County, CA
Owner:	City of Sacramento PW
Bid Date / Time:	Jan 15, 2014 at 02:00 PM

We are requesting bids for the following trades and/or material suppliers:

All categories of work and consulting.

Bid documents can be viewed at or obtained from:

Sacramento Builders Exchange, Placer Builders Exchange, Our Office by Appointment, BidPlanet.com

To be added to our bidders list please send over your company info along with a request to be added to our Bid Invitations List.

B & M Builders, Inc.
11151 Trade Center Drive #200
Rancho Cordova, CA 95670
Phone: (916) 862-0095 **Fax:** (916) 352-6944
Email: service@bm-builders.com
Patrick Mullen

Published on Jan 09, 2014 by
Construction Bid Source Interactive (Focus) and Construction Bid Source (Trade)
Trade and Focus Publications
located at http://www.constructionbidsource.com
Phone: 1-888-786-9450 Fax: 209.772.3573

This solicitation Ad will run in both publications until the bid date.

From: B & M Builders Inc. [service@bm-builders.com]
Sent: Thursday, January 9, 2014 10:26 AM
To: 'Bobbie Joe Williams'; 'Dan Rodgers'; 'Edward Carbahal'; 'Garry Easley'; 'Gary Giovannoni'; 'Georgette McClain'; 'Ines Seoane'; 'Jesus Castaneda Aliniz'; 'Kelly Cho'; 'Lara Antelmo'; 'Lori Skaggs'; 'Michael Garcia'; 'Neil Jackson'; 'Rita Miller'; 'Steve Rhoades'; 'Christopher Tompkins'; 'Juan Arreguin'; 'Audrey Daugherty'; 'Bryant Fields'; 'David Fernandes Sr.'; 'Deborah Summers'; 'Jean Cirimele'; 'Jim Lau'; 'Joe Sauseda'; 'Julian Camacho'; 'Kelly Ortiz'; 'Kevin Bao Phan'; 'Rebecca Anderson'; 'Robert Salcido'; 'Ace Fence Company'; 'Chavez Fence Company'; 'GK Construction'; 'Golden Bay Fence Plus Iron Works'; 'Hurricane and Poway Fence, Inc'; 'Kiona Landscaping'; 'Labat's Tree Care'; 'Oliviera Fence, Inc'; 'R & R Service Contractors, Inc'; 'S & L Fence Company'; 'A & P Land Development and Construction'; 'A S Contractors, Inc'; 'AJ Vasconi General Eng'; 'Allen Gill Construction, Inc.'; 'Axner Excavating, Inc.'; 'Burke Construction'; 'Clear Creek Construction'; 'David Engineering '; 'Diamond D General Engineering'; 'DL Construction'; 'Eagle Engineering'; 'Esquivel Grading and Paving'; 'Fanfa Inc'; 'KW Emerson'; 'MV Construction'; 'Nielson Construction'; 'Nor Cal General Construction Corp'; 'Papillon Builders'; 'Paradigm Construction'; 'Ramcon General Engineering and Environmental'; 'Rockin' R Grading and Excavating'; 'Santos Excavating Inc'; 'Stat-X General Engineering'; 'ABSL Construction'; 'Aguilar Landscape'; 'AP Land Development'; 'Echo Landscape'; 'Excel Landscape'; 'Felix Maintenance and Gardening'; 'Freeport Power Equipment'; 'Nitta Erosion Control'; 'Global Road Sealing'; 'Payco Specialties, Inc.'; 'Statewide Stripes, Inc'; 'Super Seal and Stripe, Inc.'; 'Traffic Loop Crackfilling'; 'Dillard Trucking Inc.'; 'USA Trucking'; 'West Coast Water and Trucking'
Subject: West Tunnel Ramps Access Project, Sacramento

B & M Builders, Inc.

An Equal Opportunity Employer
is requesting quotations from all qualified

DBE, UDBE
sub-contractors and/or material suppliers for the following project:

West Tunnel Ramps Access Project, Sacramento
Sacramento, Ca
Located in Sacramento County, CA

Owner: **City of Sacramento PW**

Bid Date: Jan 15, 2014 at 02:00 PM

We are requesting bids for the following trades and/or material suppliers:
All categories of work and consulting.

Bid documents can be viewed at or obtained from:
Sacramento Builders Exchange, Placer Builders Exchange, Our Office by Appointment, BidPlanet.com
To be added to our bidders list please send over your company info along with a request to be added to our Bid Invitations List.

B & M Builders, Inc.
11151 Trade Center Drive #200
Rancho Cordova, CA 95670

Phone: (916) 862-0095 **Fax:** (916) 352-6944
Email: service@bm-builders.com
Patrick Mullen

DBE Contact Sheet- Asphalt

Name & Contact: Method of Original Contact/Follow-up & Date:

AC Dike Company- Georgette McClain Email/Phone 1/9, 1/10
2788 Venture Drive
Lincoln, Ca 95648
P: (916) 652-0159
F: (916) 645-9618
paul@acdike.com
DBE #219

All Phase Construction and Engineering, Inc.- Garry Easley Email/Phone 1/9, 1/10
1210 Stoney Point Way
Roseville, Ca 95661
P: (916) 771-4602
F: (916) 771-4603
heasley@allphaseasphalt.com; geasley@allphaseasphalt.com
DBE #37877

BJ Williams Company, Inc.- Bobbie Joe Williams Email/Phone 1/9, 1/10
3664 Trefethen Way
Sacramento, Ca 95834
P: (916) 359-5055
F: N/A
bjwinc@hotmail.com
DBE #38218

Mag-Con Engineering and Construction, Inc.- Kelly Cho Email/Phone 1/9, 1/10
2164 Tiber River Drive
Rancho Cordova, Ca 95742
P: (916) 638-1175
F: (916) 638-1178
mag-con@hotmail.com
DBE #38384

Rodgers Construction and Engineering, Inc.- Dan Rodgers Email/Phone 1/9, 1/10
P.O. Box 6885
Stockton, Ca 95206
P: (209) 464-5780
F: (209) 464-5782
rcande@pacbell.net
DBE #29435

UDB Enterprises, Inc.- Neil Jackson
217 W. Fyffe Ave, Suite 143
Stockton, Ca 95203
P: (209) 462-1160
F: (209) 462-2163
njackson@udbenterprises.com
DBE #38325

Email/Phone 1/9, 1/10

Arrow S Company- Lori Skaggs
177 California Avenue
Arbuckle, Ca 95912
P: (707) 396-0073
F: N/A
lori@arrowco.com
DBE #40322

Email/Phone 1/9, 1/10

Don Garcia Excavating and Paving, Inc.- Michael Garcia
2020 E Street
South Lake Tahoe, Ca 96150
P: (530) 577-0558
F: (530) 577-0221
Dgarcia287@aol.com
DBE #425

Email/Phone 1/9, 1/10

S.T. Rhoades Construction, Inc.- Steve Rhoades
8585 Commercial Way
Redding, Ca 96002
P: (530) 223-9322
F: (530) 223-9222
strhoades@hotmail.com
DBE #37693

Email/Phone 1/9, 1/10

Vintage Paving Company, Inc.- Edward Carbahal
119 Main Street
Winters, Ca 95694
P: (530) 795-0132
F: (530) 795-5734
edc@vintagepavingco.com
DBE #27011

Email/Phone 1/9, 1/10

Aliniz Construction Company- Jesus Castaneda Aliniz
7160 Stevenson Blvd
Fremont, Ca 94538
P: (510) 770-5000

Email/Phone 1/9, 1/10

F: (510) 770-5070
info@alinizpaving.com
DBE #21207

All American Asphalt Sealing, Inc.- Lara Antelmo — Email/Phone 1/9, 1/10
1565 Trainer Way
Reno, NV, 89512
P: (775) 329-3003
F: (775) 827-3006
Aaasealing96@yahoo.com
DBE #40963

FCS Striping, Sealing, and Paving, Inc.- Ines Seoane — Email/Phone 1/9, 1/10
206 Thrasher Avenue
Livermore, Ca 94551
P: (925) 373-6205
F: (925) 373-6208
inesseoane@fcs-ssp.com
DBE #39845

Half Moon Bay Grading and Paving- Gary Giovannoni — Email/Phone 1/9, 1/10
1780 Higgins Canyon Road
Half Moon Bay, Ca 94019
P: (650) 726-3588
F: (650) 726-3582
hmbpave@aol.com
DBE #37792

WK Mclennan Company- Rita Miller — Email/Phone 1/9, 1/10
254 Sears Point Road
Petaluma, Ca 94954
P: (707) 763-2407
F: (707) 713-1038
ritam@wkmclellan.com
DBE #38406

DBE Contact Sheet- Concrete Cutting/Demolition

Name & Contact:	Method of Original Contact/Follow-up & Date:
Bay Line Cutting and Coring- Juan Arreguin 1635 4th Street Berkeley, Ca 94710 P: (510) 527-1000 F: (510) 527-0500 jcbayline@sbcglobal.net DBE #21117	Email/Phone 1/9, 1/10
CT Concrete Cutting, Inc.- Christopher Tompkins 26341 Jefferson Ave, Unit B Murrieta, Ca 92562 P: (951) 698-7745 F: (951) 698-0795 ctandco@verizon.net DBE #41013	Email/Phone 1/9, 1/10

DBE Contact Sheet- Electrical

Name & Contact:	Method of Original Contact/Follow-up & Date:
Camacho Communications Corporation- Julian Camacho 517 8th Street Sacramento, Ca 95814 P: (916) 444-9853 F: (916) 447-9853 J_camacho@camcosolutions.net DBE #32800	Email/Phone 1/9, 1/10
Cirimele Electric Works Inc.- Jean Cirimele 607 Marina Way South Richmond, Ca 94804 P: (510) 620-1150 F: (510) 620-1155 jcirimele@cirimeleelectric.com DBE #13624	Email/Phone 1/9, 1/10
Diablo Electrical Services- Deborah Summers 7674 W Positas Road Livermore, Ca 94551 P: (925) 523-3402 F: (925) 523-3569 dsummers@diabloelectricalservices.com DBE #40090	Email/Phone 1/9, 1/10
M & M Electric- Audrey Daugherty 1600 Auburn Blvd Sacramento, Ca 95815 P: (916) 929-0150 F: (916) 929-1168 alynn@sacmmelectric.com DBE #38278	Email/Phone 1/9, 1/10
Maximum Electric- Joe Sauseda 460 Industrial Drive Galt, Ca 95632 P: (510) 863-2077 F: (209) 745-0270 Joe_s@maximumelectric.net DBE #38401	Email/Phone 1/9, 1/10

One Way Electric, Inc.- David Fernandes Sr.
3381 Gold Country Drive
El Dorado, Ca 95623
P: (916) 939-2755
F: (916) 939-2758
info@integrityelectric.us
DBE #36005

Email/Phone 1/9, 1/10

Amland Corp- Kevin Bao Phan
3168 Knights Bridge
San Jose, Ca 95132
P: (408) 929-3949
F: (408) 298-4344
kevinphan@amlandcorp.com
DBE #24042

Email/Phone 1/9, 1/10

Bay Area Lightworks, Inc.- Jim Lau
1460 Yosemite Ave
San Francisco, Ca 94124
P: (415) 822-2336
F: (415) 822-8086
jlau@bayarealightworks.com
DBE #37334

Email/Phone 1/9, 1/10

Beci Electric, Inc.- Rebecca Anderson
8137 Capwell Drive
Oakland, Ca 94621
P: (510) 635-1477
F: (510) 635-1478
rebecca@becielectric.com
DBE #33212

Email/Phone 1/9, 1/10

Dal Technology- Bryant Fields
1151 Harbor Bay Parkway, Suite 206H
Alameda, Ca 94502
P: (510) 273-2425
F: (510) 740-6210
info@dal-tech.net
DBE #36692

Email/Phone 1/9, 1/10

Hercules Electric- Robert Salcido
573 Cedar Street
Vallejo, Ca 94590
P: (510) 914-8622
F: N/A
hercelec@yahoo.com

Email/Phone 1/9, 1/10

DBE #41192

Hi-Voltage Splicing Co., Inc.- Kelly Ortiz
755 El Pintado Road
Danville, Ca 94526
P: (925) 838-7979
F: (925) 838-7978
Kelly@hi-voltagesplicing.com
DBE #39153

Email/Phone 1/9, 1/10

DBE Contact Sheet- Fencing

Name & Contact:	Method of Original Contact/Follow-up & Date:
A & P Development and Construction- Peter Ocampo 3555 Voyager Street, Suite B Torrance, Ca 90503 P: (310) 793-2310 F: (310) 793-2312 pocampo@ap-construction.com DBE #33638	Email/Phone 1/9, 1/10
Ace Fence Company- Michael Abanilla 727 N Glendora Avenue La Puente, Ca 91744 P: (626) 333-0727 F: (626) 333-7843 mpa@acefencecompany.com DBE #34153	Email/Phone 1/9, 1/10
Chavez Fence Company- Robert Chavez 1230 Shadle Avenue Campbell, Ca 95008 P: (408) 379-8139 F: (408) 376-0273 cfence@netzero.net DBE #817	Email/Phone 1/9, 1/10
GK Construction- Kevin Yip 4911 Coliseum Way Oakland, Ca 94601 P: (510) 928-3036 F: (510) 895-3888 Kevinyip168@yahoo.com DBE #29206	Email/Phone 1/9, 1/10
Golden Bay Fence Plus Iron Works, Inc.- Caroline Taivit 4104 South B Street Stockton, Ca 95206 P: (209) 944-9754 F: (209) 944-5812 goldenbayfence@yahoo.com DBE #9140	Email/Phone 1/9, 1/10

Hurricane & Poway Fence Co., Inc.- Lauranne Volk
209 10th Street
Ramona, Ca 92065
P: (760) 789-4142
F: (760) 788-1537
laurann@usa.net
DBE #49

Email/Phone 1/9, 1/10

Kiona Landscaping- Ernie Gruetzmacher
3889 F Street, Apt 2
Eureka, Ca 95503
P: (707) 616-4340
F: N/A
egruetzmacherjr@gmail.com
DBE #40497

Email/Phone 1/9, 1/10

Labat's Tree Care- Cheryl Cole
1330 Veale Avenue
Martinez, Ca 94553
P: (925) 285-7741
F: (925) 335-9116
labatstree@gmail.com
DBE #36466

Email/Phone 1/9, 1/10

Oliveira Fence, Inc.- Debbie Garcia
400 Reed Street
Santa Clara, Ca 95050
P: (408) 727-3811
F: (408) 727-6271
pam@olivierafenceinc.com
DBE #1583

Email/Phone 1/9, 1/10

Quality Erectors & Construction, Inc.- Jesse Esquivel
3130 Bayshore Road
Benicia, Ca 94510
P: (707) 746-4198
F: (707) 751- 3962
Email: N/A
DBE #33891

Phone 1/9, 1/10

R & R Service Contractors, Inc.- Robert Harris
1526 Clovis Ave, Suite C-200
Clovis, Ca 93612
P: (559) 352-6463

Email/Phone 1/9, 1/10

F: (559) 272-2132
robh@rrserviceinc.com
DBE #36898

S & L Fence Company
1096 Fulton Ave
Sunnyvale, Ca 94086
P: (408) 745-7021
F: (408) 745-7146
Rcas555@hotmail.com
DBE #5572

Email/Phone 1/9, 1/10

DBE Contact Sheet- Grading/Excavating

Name & Contact:	Method of Original Contact/Follow-up & Date:
A & P Land Development and Construction, Inc.- Peter Ocampo 3555 Voyager Street, Suite B Torrance, Ca 90503 P: (310) 793-2310 F: (310) 793-2312 Pocampo@ap-construction.com DBE #33638	Email/Phone 1/9, 1/10
A S Contractors, Inc.- Deni Smith 5347 Cole Road Mariposa, Ca. 95338 P: (209) 742-6684 F: (209) 966-2643 deni@sti.com DBE #40742	Email/Phone 1/9, 1/10
A.J. Vasconi General Engineering- Andrew Vasconi 1820 Galindo Street, Suite 275 Concord, Ca 94520 P: (925) 691-9400 F: (925) 691-3900 aj@ajvasconi.com DBE #32335	Email/Phone 1/9, 1/10
Allen Gill Construction, Inc.- Allen Gill 20633 Gas Point Road. Suite B2 Cottonwood, Ca 96022 P: (530) 547-4334 F: (530) 547-3197 tgill@frontier.net DBE #15324	Email/Phone 1/9, 1/10
Axner Excavating, Inc.- Julie Barnes 2900 Old Oregon Trail Redding, Ca 96003 P: (530) 222-0539 F: (530) 222-8910 Julieb@axnerexcavating.com DBE #38119	Email/Phone 1/9, 1/10

Burke Construction- Michael Burke
4421 Tennessee Drive
Shingle Springs, Ca 95682
P: (530) 676-1009
F: (530) 672-2411
burkebid@gmail.com
DBE #30173

Email/Phone 1/9, 1/10

Clear Creek Construction- Adam Harnden
570 Julian Street
Redding, Ca 96003
P: (530) 224-1430
F: N/A
clearcreekadam@gmail.com
DBE #41250

Email/Phone 1/9, 1/10

DL Construction- Dat Luong
5460 W Ramona
Fresno, Ca 93722
P: (559) 275-8339
F: (559) 274-1579
dlconstruction@hotmail.com
DBE #13129

Email/Phone 1/9, 1/10

David Engineering Construction- Oscar David
6344 Nugget Drive
Foresthill, Ca 95631
P: (530) 367-3508
F: (530) 820-9120
odavid@ftcnet.net
DBE #14982

Email/Phone 1/9, 1/10

Diamond D General Engineering- Laura Defty
32500 State Highway 16
Woodland, Ca 95695
P: (530) 662-2042
F: (530) 662-6770
sdefty@ddge.net
DBE #33164

Email/Phone 1/9, 1/10

Eagle Engineering and Construction, Inc.- Curtis Brooks
1175 Palomar Drive
Redwood City, Ca 94062
P: (650) 367-8000

Email/Phone 1/9, 1/10

F: (650) 367-8282
clbrooks@sbcglobal.net
DBE #24176

Esquivel Grading and Paving, Inc.- Ralph Esquivel
918 Ingersol Ave
San Francisco, Ca 94124
P: (415) 468-5700
F: (415) 468-8101
audrey@esquivel-gp.com
DBE #1296

Email/Phone 1/9, 1/10

Fanfa, Inc.- Joseph Fanfa
2401 Granit Ave
San Lorenzo, Ca 94580
P: (510) 278-8410
F: (510) 278-3095
dbgriffin@fanfainc.com
DBE #5435

Email/Phone 1/9, 1/10

K. W. Emerson- Emma Emerson
413 West St. Charles Street
San Andreas, Ca 95249
P: (209) 754-3839
F: (209) 754-3830
Alison@kwemerson.com
DBE #20410

Email/Phone 1/9, 1/10

MV Construction- Manuel Valdez
PO Box 1575
Atwater, Ca 95301
P: (209) 756-5936
F: (209) 357-0851
Valdez05@gmail.com
DBE #40840

Email/Phone 1/9, 1/10

Nielson Construction- Diann Nielson
147 Camino Oruga
Napa, Ca 94558
P: (707) 253-8774
F: (707) 253-0131
dnielson@nielsoninc.com
DBE #32107

Email/Phone 1/9, 1/10

Norcal General Construction Corp- Kenny Phan
1950 Majestic Court
San Jose, Ca 95132
P: (408) 886-0335
F: (408) 969-1650
norcalgeneralconstruction@yahoo.com
DBE #39231

Email/Phone 1/9, 1/10

Papillon Builders
20300 Rim Rock Court
Foresthill, Ca 95631
P: (916) 580-7019
F: (888) 717-7270
joellen@papillonbuilders.com
DBE #21950

Email/Phone 1/9, 1/10

Paradigm Construction- Steven Mays
5321 Tersk Way
Elk Grove, Ca 95757
P: (916) 271-2623
F: (916) 714-6520
steve@paradigmbuilt.com
DBE #37021

Email/Phone 1/9, 1/10

Ramcon Engineering and Environmental, Inc.- Michael Ramos
3751 Commerce Drive
West Sacramento, Ca 95691
P: (916) 372-7535
F: (916) 372-4209
rollo@ramcon.com
DBE #5348

Email/Phone 1/9, 1/10

Rockin' R Grading and Excavating
9637 Rodden Road
Oakdale, Ca 95361
P: (209) 495-9521
F: (209) 847-0586
robin@rockinrinc.com
DBE #34071

Email/Phone 1/9, 1/10

Santos Excavating, Inc.- George Santos
643 West 4th Ave
Chico, Ca 95926
P: (530) 894-2274

Email/Phone 1/9, 1/10

F: (530) 894-7767
ernie@santosengineering.com
DBE #30480

Stat-X General Engineering
4217 Plemini Court
Salida, Ca 95368
P: (209) 481-9008
F: (888) 411-6956
David.altstatt@att.net
DBE #40505

Email/Phone 1/9, 1/10

DBE Contact Sheet- Grinding

Name & Contact:	Method of Original Contact/Follow-up & Date:
ABSL Construction- Luis Allende 29393 Pacific Street Hayward, Ca 94544 P: (510) 727-0900 F: (510) 727-0910 Daryl@abslconstruction.com DBE #5270	Email/Phone 1/9, 1/10

DBE Contact Sheet- Landscaping

Name & Contact:	Method of Original Contact/Follow-up & Date:
AP Land Developments- Mauricio Acosta 8920 Sunset Ave #E Fair Oaks, Ca 95628 P: (916) 863-1979 F: (916) 357-5263 macosta@goapland.com DBE #39368	Email/Phone 1/9, 1/10
Aguilar Landscape- Anthony Aguilar 9730 Mt Vernon Road Auburn, Ca 95603 P: (530) 885-5283 F: (916) 663-0803 highlandorchard@att.net DBE #23647	Email/Phone 1/9, 1/10
Echo Landscape- Troy De Herrera PO Box 20926 Castro Valley, Ca 94546 P: (510) 481-8614 F: (510) 481-5386 Echo_landscape@sbcglobal.net DBE #32350	Email/Phone 1/9, 1/10
Excel Landscape- Raymond Williams 9624 Kiefer Blvd Sacramento, Ca 95827 P: (916) 366-6364 C: (916) 869-6283 F: (916) 366-6225 excellandscape@hotmail.com DBE #40892	Email/Phone 1/9, 1/10
Felix's Maintenance and Gardening- John Felix 2225 Saint George Drive Concord, Ca 94520 P: (925) 778-3273 F: (925) 778-3059 johnfelix@comcast.net DBE #32772	Email/Phone 1/9, 1/10

Freeport Power Equipment- Yoshio Noguchi
6235 Belleau Wood Lane #2
Sacramento, Ca 95822
P: (916) 422-9238
F: (916) 422-5079
frpower@aol.com
DBE #31056

Email/Phone 1/9, 1/10

Labat's Tree Care- Cheryl Cole
1330 Velae Avenue
Martinez, Ca 94553
P: (925) 285- 7741
F: (925) 335-9116
labatstree@gmail.com
DBE #36466

Email/Phone 1/9, 1/10

Nitta Erosion Control- Laura Bills
3778 Del Mar Avenue
Loomis, Ca 95650
P: (916) 652-7459
F: (916) 652-4376
nittainc@hotmail.com
DBE #217

Email/Phone 1/9, 1/10

DBE Contact Sheet- Striping

Name & Contact:	Method of Original Contact/Follow-up & Date:
Global Road Sealing- Tri La 10832 Dorothy Ave Garden Grove, Ca 92843 P: (714) 893-0845 F: (714) 893-0945 Trila.grsi@yahoo.com DBE #31176	Email/Phone 1/9, 1/10
Payco Specialties, Incorporated- Rebecca Llewellyn 120 North Second Ave Chula Vista, Ca 91910 P: (619) 422-9204 F: (619) 427-1620 Rebecca@payco.biz DBE #102	Email/Phone 1/9, 1/10
Traffic Loop Crackfilling- Mai-Len 1915 West Ball Road Anaheim, Ca 92804 P: (714) 520-4026 F: (714) 520-4027 trafficloops@sbcglobal.net DBE #38033	Email/Phone 1/9, 1/10
Super Seal and Stripe, Inc. – Brenda Hampton-Ortiz 310 A Street Fillmore, Ca 93015 P: (805) 524-7345 F: (805) 524-7428 Brenda@supersealandstripe.com DBE #2003	Email/Phone 1/9, 1/10
Statewide Stripes, Inc.- David Brilhante 7320 Mission Gorge Road San Diego, Ca 92120 P: (858) 560-6887 F: (858) 560-0158 donna@statewidestripes.com DBE #32232	Email/Phone 1/9, 1/10

DBE Contact Sheet- Trucking

Name & Contact:	Method of Original Contact/Follow-up & Date:
USA Trucking- Amanda Dhesi 5186 WB Goodman Lane Fairfield Ca 94533 P: (707) 624-9522 F: (707) 437-4050 estimating@usa.com DBE #39323	Email/Phone 1/9, 1/10
Dillard Trucking Inc.- Melissa Roach PO Box 579 Byron, Ca 94514 P: (925) 634-6850 F: (925) 634-0874 melissar@dillardenv.com DBE #7106	Email/Phone 1/9, 1/10
West Coast Water and Trucking- Jennifer Gemignani 3941 Park Drive #20-231 El Dorado Hills, Ca 95762 C: (650) 922-0255 O: (916) 358-8697 F: (916) 358-8699 californiawcw@aol.com DBE #37869	Email/Phone 1/9, 1/10

Rejected-

Vintage Paving, Inc.- 119 Main Street, winters, ca 95694- 530-795-0132 price for identical items was $37705 less by B & B Asphalt

Used-

B & B Asphalt- 6610 Asher Lane Sacramento, Ca 95828 916-383-2888

B&B Asphalt, Inc.

--Proposal and Contract--

6610 Asher Lane
Sacramento, Ca. 95828

(916) 383-2888
Fax (916) 381-4141

CA LICENSE
#590302

Proposal Date: January 29, 2014

B&M Builders
Austin O'Connell
11151 Trade Center Dr. #200
Rancho Cordova CA 95670
916-893-2193

Project: West Tunnel Ramps Access Projects
2nd and I Street
Sacramento, CA.

Estimator: Tracy Cummings

B&B Asphalt, Inc., herinafter, proposes to furnish all materials, equipment, and perform all labor necessary to complete the following:

# 50	**Cold Plane AC Pavement (0.17" Max.)**	**340 SY**	**$ 36.00 SY**
# 51	**Hot Mix Asphalt (3/4") Pavement to Place**	**970 TON ¾" AC**	**$ 90.00 TON**
# 52	**Hot Mix Asphalt (1/2") Pavement to Place**	**430 TON ½" AC**	**$ 95.00 TON**

ASPHALT LIFTS TO BE COMPLETED WITHIN 24 HRS OF EACHOTHER. NO TACKING BETWEEN LIFTS. IF REQUIRED WILL BE COMPLETED BY CHANGE ORDER
EXCLUDES ANY AND ALL TRAFFIC CONTROL
EXCLUDES SOIL STERILANT, PRIME OR FOG SEAL
¾" AC TO BE PLACED AT 4 ½" THICK IN (2) LIFTS
½" AC TO BE PLACED AT 2" THICK IN (1) LIFT
CSRM PARKING TO BE PAVED AND COMPLETED IN ONE MOB.
SVS PARKING LOT TO BE PAVED AND COMPLETED IN ONE MOB.

STIPULATIONS AND EXCLUSIONS:

The following stipulations are a material part of this proposal and contract. Should there be any conflicts between these stipulations and any general contract for the project, these stipulations shall prevail.

1. PRICE ESCALATION: Buyer acknowledges that national and regional supply shortages for the new raw material necessary for the production and delivery of the Material may occur and that the prices for oil and fuel as well as liquid asphalt and aggregate may increase during the term of the Quotation. In the event that B & B Asphalt, Inc. incurs cost increase (s) in the purchase price of Material to be supplied or delivered under this Quotation, then the Buyer and B & B Asphalt, Inc. shall negotiate to mutually agree upon a revised price. If the parties cannot agree upon a revised price, then either party may, upon two (2) days written notice, terminate the agreement as to any Material not delivered to Buyer as of the date of the termination.
2. Bid is based on "5% Retention being withheld."
3. No sealcoating, striping or signs by Contractor.

Payment to be made as follows: Payment due upon completion of each phase of work.

Note: Contractor will not be responsible for failure of existing pavement outside those areas designated for "construction repairs"

B&B Authorized Representative Signature	Date	Owner / Property Mgr / Construction Co.	Date
	Jan/29/14		

B&B Asphalt, Inc.

--Proposal and Contract--

6610 Asher Lane
Sacramento, Ca. 95828

(916) 383-2888
Fax (916) 381-4141

CA LICENSE
#590302

Proposal Date: January 29, 2014

4. Any damage to newly paved areas, which are properly barricaded for no admittance, will not be the liability of B & B Asphalt, Inc. This also includes pedestrian tracking of tack oils, etc. outside of work areas.
5. Construction water shall be based on using either an existing fire hydrant or other adequate water source located on site, at no cost.
6. When the area to be paved has a drainage slope less than 1.25%, B & B Asphalt, Inc. will not be responsible for any bird baths (puddles), which may occur.
7. Contractor bears no responsibility for raveling of feathered edges.
8. Prior to or at start of work, a field investigation of existing pavement elevations will be made to determine that proper drainage occurs. In the case of a single price, lump sum contract, any adjustments to the scope of work of Contractor due to drainage problems will require a contract change order.
9. When only the traffic aisle is paved or a portion of the entire area is paved, any resulting bird baths (puddles) along the edge(s) of the new paving will only be corrected on an extra work basis (No warranty is given as to the elimination of bird baths).
10. When others have prepared the underlying sub-grade, B & B Asphalt, Inc. will not be responsible for any future failure of the new asphalt concrete surfacing due to compaction problems/settlement of the sub-grade. Owner understands if the underlying sub-grade consists of highly expansive soil, subsequent (after paving) reflective cracking may also occur.
11. No testing, permits, fees or cost of any city business licenses by Contractor.
12. No prime or fog seal by Contractor.
13. Trench compaction for utilities installed by others shall be the responsibility of others.
14. No de-watering or erosion control measures by Contractor.
15. All concrete, except extruded curbs, must be installed prior to base and paving work and must have ten (10) days cure time. Otherwise B & B Asphalt, Inc. will not be responsible for any damage.
16. Payment and/or Performance bond not provided by Contractor.
17. One move-in for each element of work. Additional move-ins caused by delay or other factors beyond the control of Contractor shall be assessed at a rate of $1,500 per move-in plus move-in for rental equipment, if any.
18. B & B Asphalt, Inc. is an open shop company.
19. Governmental inspection, if required, to be scheduled by General Contractor or owner.
20. No sterilization included by Contractor.
21. No structural or drainage warranty is expressed or implied if sub-grade or AB grade is performed by others.
22. If AB grade is prepared by others and bid by the square foot, any over-run in AC (over the theoretical quantity) will be invoiced at $ 90.00 per ton for ¾" AC and $ 95.00 per ton for ½" AC.
23. Budget estimate (not a contract) is based on current costs for material, trucking and equipment.

Payment to be made as follows: Payment due upon completion of each phase of work.

Note: Contractor will not be responsible for failure of existing pavement outside those areas designated for "construction repairs"

B&B Authorized Representative Signature	Date	Owner / Property Mgr / Construction Co.	Date
	Jan/29/14		

B&B Asphalt, Inc.

--Proposal and Contract--

6610 Asher Lane
Sacramento, Ca. 95828

(916) 383-2888
Fax (916) 381-4141

CA LICENSE
#590302

Proposal Date: January 29, 2014

24. Substantial commencement of work pursuant to the contract shall mean move-in of labor and/or equipment.
25. Notification of employees and tenants regarding work dates is the client's responsibility. Items obstructing the work area, such as cars, garbage bins, etc., are to be removed prior to the start of Contractor's work. The client will provide a tow service in the event a vehicle remains in the work area. All towing costs will be the client's responsibility.
26. No traffic controls.
27. The bid/proposal submitted by B & B Asphalt, Inc. lists specific items of work. Any work not listed is excluded from this bid.
28. The actual cost for the Waiver of Subrogation on worker's compensation shall be paid upon completion of the project per change order.
29. B&B Asphalt, Inc. accepts no financial responsibility in the event that the scheduled start date is delayed due to factors beyond our control. These factors include, but are not limited to, material shortages, plant breakdowns, trucking shortages or equipment breakdowns.
30. B&B Asphalt, Inc. accepts no responsibility for any ADA Compliance work on existing parking lots without an engineered drawing (prepared by others).
31. B & B Asphalt, Inc. will not accept any responsibility for damage to project unless a "Punch List" is presented within 10 (ten) days of completion of our work.
32. In the case of a single lump sum contract, any alteration or deviation from the bid items involving extra work and/or extra cost of material or labor will only be executed upon written order for same, and will become an extra charge over the sum mentioned in this contract. All agreements must be made in writing and signed by a person with apparent authority of, or who is an agent of contracting party. No change orders are necessary if the contract is a unit price (per ton, per square foot, etc.) contract. All agreements are contingent upon strikes, accident, or delays beyond our control.

- **The Contractor shall repair or replace any work done under this contract which may prove to be defective in material or workmanship for a period of one year after completion; however, the Contractor will not be liable for any failure of existing improved property caused by faulty design, improper construction, improper grading or compaction not performed by Contractor, or improper maintenance, any of which may arise before, during or after execution of this contract.**

- **"Contractor and Buyer agree that all work by Contractor pursuant to this Contract will be paid in the form of Progress Payment. All work will be invoiced by Contractor upon completion of each phase of work, as defined by Contractor. Payment upon each invoice shall be due within 30 days of invoice date less any withheld retention, if applicable. Any progress payments not received within 30**

Payment to be made as follows: Payment due upon completion of each phase of work.

Note: Contractor will not be responsible for failure of existing pavement outside those areas designated for "construction repairs"

B&B Authorized Representative Signature	Date	Owner / Property Mgr / Construction Co.	Date
	Jan/29/14		

B&B Asphalt, Inc.

--Proposal and Contract--

6610 Asher Lane
Sacramento, Ca. 95828

(916) 383-2888
Fax (916) 381-4141

CA LICENSE
#590302

Proposal Date: January 29, 2014

days after date of invoice will be considered delinquent and shall incur interest charges of 1 ½% per month."

- **In the event this contract should be referred to an attorney for collection and/or in the event that suit be commenced to collect any sums due hereunder, Buyer agrees to pay reasonable attorney's fees plus court costs. "Buyer also agrees that in the event suit is commenced, Contractor shall be entitled to pursue all penalties available under Cal. Civ. Code Section 3260 and 3260.1, Cal. Business & Professions Code Section 7108.5, Cal. Public Contractor Code Section 10262.5 and 7107 and/or any other applicable statute which provides for penalties as a result of any wrongful withholdings of progress or retention payments without justification."**

- **Contractor may withdraw this proposal if not accepted within ten (10) days.**

STATE LAW NOTIFICATION B&P SECTION 7030
Contractors are required by law to be licensed and regulated by the Contractors State License Board which has jurisdiction to investigate complaints against contractors if a complaint regarding a patent act or omission is filed within four years of the date of the alleged violation. A complaint regarding a latent act or omission pertaining to structural defects must be filed within 10 years of the date of the alleged violation. Any questions concerning a contractor may be referred to the Registrar, Contractors' State License Board, P.O. Box 26000, Sacramento, California 95826

Payment to be made as follows: Payment due upon completion of each phase of work.

Note: Contractor will not be responsible for failure of existing pavement outside those areas designated for "construction repairs"

B&B Authorized Representative Signature	Date	Owner / Property Mgr / Construction Co.	Date
	Jan/29/14		

VINTAGE PAVING COMPANY, INC.

General Engineering Contractors
Lic. #709237

119 Main Street • P.O. Box 461 • Winters, CA 95694
Business Phone: (530) 795-0132 • Fax: (530) 795-5734

To:	Bidding Contractors	**Contact:**	
Address:	Anytown CA	**Phone:**	
		Fax:	
Project Name:	Sacramento West Tunnel Ramps Access Project	**Bid Number:**	
Project Location:		**Bid Date:**	

Item #	Item Description	Estimated Quantity	Unit	Unit Price	Total Price	B&B
50	Cold Plane AC Pavement (0.17" Max)	340.00	SY	$25.75	$8,755.00	12,240
51	Hot Mix Asphalt (3/4"(Pavement To Place	970.00	TON	$118.00	$114,460.00	87,300
52	Hot Mix Asphalt (1/2") Pavement To Place	430.00	TON	$116.00	$49,880.00	40,850
68	Mobe	1.00	LS	$5,000.00	$5,000.00	2
				Total Bid Price:	**$178,095.00**	140,390

Notes:

- We hereby submit the following proposal to Furnish and Place A.C. Paving at various depths on the above referenced Project. Please note we exclude Traffic Control and will require 3-day to complete our work. This proposal is based on One move-ins, using ½" Cal-Trans AC and the following stipulations. THIS QUOTE IS GOOD FOR 30-DAYS FROM ABOVE DATE OF PROPOSAL!

- ***Special Conditions:***
  1. Final invoicing and payment shall be based on actual quantities placed.
  2. See **"Oil Escalation Clause"** @ next page for possible price increases due to fluctuating Oil Prices.
  3. All work to be performed during normal working hours - 6:00 A.M. to 6:00 P.M., Mon. through Fri.
  4. Two-week notice required prior to mobilization (four-weeks in September & October).
  5. General Contractor / Owner to supply on-site water source at no cost to VPC.
  6. Price to be re-negotiated for A.C. Paving performed after October 31, 2013 **or** for "Winter-Paving" conditions **if** weather prohibits a full 8-hours of Paving (typically between Nov. 1st and April 1st).
  7. All work included in this proposal is to be performed with conventional paving and hauling equipment and clear access to the work. All job-delay costs resulting from revisions, plan errors, specialized work or phasing required when abnormal site conditions, access limitations or other unknown conditions exist, shall be paid on a time and materials basis.

- ***The Following Items Are Excluded:***
  1. Testing, Bonds (add 1%), Fees, Permits, Engineering, Staking/Surveying or Waiver of Subrogation.
  2. Prime Oil, Weed Killer, Crack clean/seal, Paving Fabric, Seal Coat, Striping, Sawcutting Grinding, staking and header board.
  3. Tack Oil between lifts to accommodate "staged construction" by Owner or General Contractor.
  4. Raising Iron / Adjusting of Utilities (to be left below grade and adjusted by others after paving).
  5. Paving failures caused by faulty Subgrade, Baserock or pipe trench settlement done by others.
  6. Placing and/or finishing of Baserock or Subgrade (to be by others to +/- 0.05 Ft.).
  7. Handicap Ramps, A.C. Dikes, Speed Bumps, Headers, Paving around poles or other obstructions.
  8. Traffic Controls, Barricades, Lane Closures or Temporary Lane Markers.
  9. Any Night Work

- ***Weather / Temperature Clause (A.C. Paving):***
  This price is based on placing the asphalt concrete during normal working shifts of 8 hours or more and with continuous operation. Should the Inspecting Agency, Owners Agent or General Contractor cause delays in paving because of insufficient ground temperatures, excessive moisture or atmospheric conditions, the Owner / General Contractor shall reimburse Vintage Paving Co. for all stand-by, re-mobilization and/or other associated delay charges.

- ***Minimum Tonnage Clause (A.C. Paving):***
  This price is based on Vintage Paving Co. having sufficient grade in one location **available** to permit the placing of a minimum of **ALL-Tonnage** in a continuous operation. For any day's production less than the minimum, payment shall be renegotiated. This is exclusive of plant and equipment breakdowns or trucking delays, which are the responsibility of Vintage Paving Co., Inc.

- ***Oil Escalation Clause (A.C. Paving):***
  The above noted price is guaranteed for **30-DAYS** from the above date of proposal. After that date, Asphalt material and Trucking of Asphalt material is subject to price escalation as based on increased costs for paving asphalt "Rack-Oil" F.O.B. the plant (currently $600/Tn). Any cost adjustments will be based on the "Rack-Oil" price at the Asphalt Plant and associated trucking rates adjustments.

- ***Move-In Clause:***
  This price is based on this work being performed in **one** move-in. Additional move-ins will be **negotiated** (additional crew-days may be required).

- This is a proposal only for the purpose of establishing a price for the work as outlined. In the event we are low bidders, a formal contract suitable to both parties shall be prepared and neither party shall be bound until the contract is fully executed. This proposal shall be attached and made a part of any contract or subcontract resulting therefrom and shall govern over any conflicting provisions in the contract or subcontract. This proposal is good for thirty (30) days from the date hereon, after which time Vintage Paving Company, INC., reserves the right to review the proposal for any changes in prices.
- Vintage Paving Company, Inc. is a **Certified M.B.E.** with Cal-Trans (cert. # CT-027011) and a **Certified D.B.E.** with the City of Sacramento (cert. # VIP5350020P).

ACCEPTED: The above prices, specifications and conditions are satisfactory and hereby accepted. **Buyer:** _____ **Signature:** _____ **Date of Acceptance:** _____	**CONFIRMED:** **Vintage Paving Company, Inc** **Authorized Signature:** _____ **Estimator:**

EXCEL LANDSCAPE

Bid Proposal

January 29, 2014

Project Name: **West Tunnel Ramps Access**

Location: Sacramento, CA

Contractor License #703658
SBE Certification No. 18986
DBE Certification UCP Firm No. 40892

Project Information- Total Base: $42,500

Section Bidding:

1. **Irrigation system:** Sch 40 main line, Class 200 lateral line, Rain Bird automatic control valve, Rain Bird Quick Coupler Valve, Toro shrub pop-up spray heads, Nibco gate valve, Superior master valve, Calsense 1" flow sensor, Calsense automatic controller ET2000e-6 with COMM 1 YR
2. **Prepping:** soil amendments, finish grading, bark, pre-emergent.
3. **Planting:** 1 gal. & 5 gal. shrubs, 15 gal. trees, flats, agriform tablets, stakes & ties.
4. **Substitutions:** Sub. 5 gal. Buxus 'Green Gem' with similar variety, 5 gal. Pieris Japonica with 2 gal size, 5 gal. Rhododendron 'America' with similar variety.
5. **Decomposed Granite w/ weed fabric:** 12 yds (920 SF)
6. **(3) 30" x 36" & (9) 20" x 24" boulders**
7. **Header board:** 215 LF
8. **Scale:** 1"=16' (L-1 & L-3); 1"-10' (L2 & L4)
9. **Sheets:** L-1, L-2, L-3, L-4, L-5, L-6, L-7, L-8 , L-9, L-10
10. **Addendums:** 2
11. **Prevailing Wages**
12. **30 day Maintenance**
13. **Must notify us 2 weeks prior to the commencement of landscape.**

Exclusions: saw cutting, top soil import, rough grade accepted at 2% w/ rocks no larger than 1", boreing, Repair damage to and (E) irrigation and/or planting area w/ an ADD TBD, any unforeseen materials or obstruction to complete work.

Extra work rates:

a. Any products or services not otherwise specified in this contract shall be negotiated between Contractor & Owner at a price to be agreed upon between both parties. All extra work except where noted shall be billed at $65 per man-hour.
b. After-hours emergency calls shall be billed at $85 per hour. (Emergency calls are to be defined as irrigation related or fallen trees)

Having carefully examined the instruction to bidders, the general conditions, and the specifications and drawings, Excel Landscape proposes to furnish all materials and labor to complete the work called for in the plans and specifications provided.

If there are any questions or concerns, please contact our office at (916) 366-6364 or (916) 869-6283 and speak with **Ray Williams (Estimator).**

9624 Kiefer Blvd Sacramento, CA 95827

LANDSCAPING BID

ASPEN LANDSCAPING INC

8727 Bunting Ct. Orangevale, CA 95662 Phone 916 988-8745 fax 916 988-8763
Lic. No. 417274 Email: **aspenol@sbcglobal.net**

DATE: **Jan. 29, 2014**

FOR: Prime Contractors

JOB: ***West Tunnel Access Ramp, Sacto, CA***

INCLUSIONS:

Complete irrigation systems and landscaping per plans and specs by MTW LA, dated Nov. 2013 sheets L-1 through L-10. Includes automatic sprinkler system. Soil prep, finish grading, and decomposed granite. Moss rock boulders. Shrubs to Plant and bark mulch. Landscape maintenance.
Includes line items 62, 63, 64 & 65 only. See attached line item sheet of bid proposal.
Federal prevailing wage rates to be paid.
Includes Addendums 1-4. ***Please note: This bid supercedes prior bid sent on bid date 1-22-14***

Base Bid : $36,680.00

EXCLUSIONS:

Demo, Clear and grub. Rough grade to +/- 2/10'. Import or export of soils from site. . **Cut and patch of hardscape as required for irrigation systems.** Any work to existing copper water lines. ~~Boulders~~, field stone, or sitting stones. Fencing. Water tap to copper line.

Authorized Signature _____
Richard S. McGrath
Pres.
cell # 916 214-8123

456

ASPEN LANDSCAPING, INC.

CITY OF SACRAMENTO
Department of Transportation
Engineering Services Division

51	Hot Mix Asphalt (3/4") Pavement to Place	970	TON	$	$
52	Hot Mix Asphalt (1/2") Pavement to Place	430	TON	$	$
53	Roadside Sign to Remove	13	EA	$	$
54	Roadside Sign to Relocate	1	EA	$	$
55	Roadside Sign to Place	22	EA	$	$
56	Thermoplastic Traffic Stripe to Place	110	LF	$	$
57	Thermoplastic Pavement Marking to Place	3,000	SF	$	$
58	Pavement Marker to Place	202	EA	$	$
59	Painted Pavement Stripe to Place	6,600	LF	$	$
60	Painted Stall Markings to Place	1	LS	$	$
61	Audio Bird Control Device to Install	1	LS	$	$
62	Automatic Irrigation System to Install	1	LS	$ 18,700	$ 22066 18,700
63	Soil Preparation and Finish Grading	1	LS	$ 8024 6,800	$ 6,800
64	Shrubs to Plant	1	LS	$ 10,280	$ 10,280
65	Landscape Maintenance	1	LS	$ 900	$ 900
66	Parking Lot Lighting Installation	1	LS	$	$
67	Permeable Interlocking Pavers	13,900	SF	$	$

ABSL Construction

8435 24th Ave, Sacramento, Ca. 95826
TE: (916) 379-0442 Fax: (916) 379-0443

Contractors License **A 621781**
SMBE & DBE Certification **CT-005270**

Bid Quotation
AC Grinding

Project Name: *West Tunnel Ramps Access*
Project Date: 1/29/14
Location: Sacramento, California

Grinder, AC Grinding

Daily Minimum Charge **$ 3700.00**
This price is for an 80" inch cold planer machine, ***Wirtgen W 2000***. Up to 12 inches depth. $0.00 additional for night work. $500.00 per hour overtime. $500.00 additional for Saturday work. $1000.00 additional for Sunday work.

Daily Minimum Charge **$ 2750.00**
This price is for an 48" inch cold planer machine, ***Wirtgen W 1200***. Up to 12 inches depth. $0.00 additional for night work. $400.00 per hour overtime. $500.00 additional for Saturday work. $1000.00 additional for Sunday work.

$0 Mobilization each way.

ABSL Construction to cold plane asphalt concrete and load cuttings into trucks provided by the contractor.

Portland cement concrete grinding is excluded from this quotation.

ABSL Construction will cold plane as close as possible to existing manholes, water valves, and other obstructions in cutting plane. Handwork and placing temporary asphalt tapers around these objects or at pavement edge for safety requirements are excluded.

Contractor to provide water or water meter and provide traffic control during cold planing operation.

All areas to be ground shall be clearly marked by the general or the job inspector.

Anything not specifically included in this price should be considered excluded.

ABSL Construction does not accept backcharges due to machine breakdown during operation above the machine's daily rental fee.

Back charges will only be based on the time the machine is broken and will reflect the cost of the equipment for that time. All others costs due to the equipment breakdown will not be charged to ABSL Construction.

ABSL does not accept force account rates or retention.

This quotation will be part of our contract or purchase order agreement and is valid for one month after the bid date.

If you have any questions regarding the above quote please call me at (916) 379-0442 or fax at (916) 379-0443.
Sincerely,

Todd Wheeler

ABSL Construction

8435 24th Ave, Sacramento, Ca. 95826
TE: (916) 379-0442 Fax: (916) 379-0443

Contractors License **A 621781**
SMBE & DBE Certification **CT-005270**

GRINDING JOB AGREEMENT

The prices set forth above are based on the following assumptions and are subject to change under conditions set forth below.

1) All areas to be ground shall be clearly marked by the General Contractor or Inspector before grinding operation starts.
2) A minimum daily rate is any part of an 8 hour day and overtime will be charged for work done other than [illegible]
3) [illegible]
4) [illegible]
6) The unit prices are based on the estimated quantities in the bid proposal. If the quantity of the item changes by 25% or more the unit price is subject to equitable adjustment.
7) All teeth over one complete set will be charge to the contractor.
8) Prices are good for 30 days of the date of this proposal, after that date the prices are subject to adjustment.
9) In the event there is an increase in the cost of fuel of more than $0.50 per gallon during the performance of this contract, ABSL will be entitled to a $75.00 per day fuel surcharge. The base cost of fuel shall be established on the bid date of the contract by reference to the Weekly Retail On-Highway Diesel Prices for California, as published by the U.S. Department of Energy on its web site at www.tonto.eia.doe.gov/oog/info/wohdp/diesel.asp.
10) If ABSL cannot proceed with its work as scheduled due to other, standby time will be charged at the following rate: $425.00
11) Downtime for equipment becoming stuck in wet or muddy sub-grade conditions will be charged at a stand-by time rate until removed. Additional equipment required for removal will be charged at a time and materials basis.
12) This proposal to be attached and made part of any and all resulting contracts.
13) The above price does not include permits, fees, bonding, state or local taxes.
14) This is a proposal only for the purpose of establishing a price for work as outlined. In the event ABSL is the low bidder a formal contract or PO suitable to both parties shall be prepared and fully executed.
15) Repairs of damage to ABSL equipment due to unmarked or buried obstructions; i.e. valve boxes, manholes covers, concrete, steel fence posts, steel pipe or excessive depth asphalt will be billed at time and material for repairs
16) Backcharges to ABSL must be communicated by contractor in a written notice within 72 hours from the time of occurrence for backcharges.
17) Unless otherwise agreed to in writing prior to start of work, payment is due and payable within 30 days of billing, and no retention to be withheld on payments.
18) Items not specifically included are considered to be excluded. If you have any questions please call.

Thank You, Todd Wheeler

TCG

Civil Engineering and Stormwater Solutions

January 22, 2014

RE: Proposal for SWPPP for West Tunnel Access Ramps, Bids 1/22/14

Dear Prime Contractor;

Thank you for the opportunity to provide a bid for this work. We provide civil and stormwater engineering services. This proposal assumes the project is a Risk Level 1.

Scope of Work:

A. Prepare Stormwater Pollution Prevention Plan (SWPPP)
   I. Prepare a Notice of Intent, if applicable. Include Risk Assessment and Site Map.
   II. Prepare SWPPP per State and contract requirements. Include REAP template, CSMP and SAP.
   III. Prepare Notice of Termination (NOT) at completion of project.
   IV. Submit SWPPP to State Water Board via SMART program if requested.
   V. Prepare Water Pollution Control Drawings as part of SWPPP.

B. Provide Stormwater Annual Report
   I. Prepare Stormwater Annual Report in accordance with the SWRCB and contract requirements.
   II. Unless otherwise contracted for, it is assumed that all necessary lab, sampling and inspection reports necessary for the Annual Report will be provided by the contractor in appropriate format.

C. Provide Water Pollution Control Manager/QSD/QSP 1 day per week
   I. Provide Water Pollution Control Manager (WPCM) with appropriate QSD and QSP certification.
   II. Provide inspection 1 day per week of stormwater BMP's and oversee BMP implementation.
   III. Provide quarterly non-stormwater monitoring inspection.
   IV. Check NOAA weather forecast daily.
   V. Provide stormwater inspection reports once a week.
   VI. Provide initial SWPPP training to contractor's staff and subcontractors at beginning of job.
   VII. Exclusions; Does not include any onsite sampling or lab testing if there is an event that triggers non-stormwater, non-visible pollutant or other testing. Assumes contractor's staff can provide the daily, pre-storm, during storm and post-storm visual BMP rain event inspection to reduce costs unless otherwise contracted for.

D. Provide QSD/QSP for Pre-Storm, During Storm or Post Storm Inspection
   I. As part of a turn-key service, we can also provide all the pre-storm, during storm or post storm Inspections. These inspections would be done or overseen by a QSD or QSP. A Pre-storm inspection is required when there is a 50% or more chance of rain. During storm inspections are required daily during extended rain events. Post storm inspections are required after a qualifying rain event with 0.5" or more of rain. This would be for inspections that would be required above and beyond the weekly inspection in proposal Item C above.

Fee:

The SWPPP will be prepared for a Fixed Fee of the following, with fees billed monthly based upon percent completion:

A. Prepare SWPPP $ 1,600

B. Provide Stormwater Annual Report, $125 EA x 1 $ 125

TULLY CONSULTING GROUP
180 S. FIRST ST, SUITE 9 • DIXON, CA • 95620
PHONE: 707-693-1926 • FAX 707-471-0318
ROBIN@TULLYGROUP.COM

TCG

Civil Engineering and Stormwater Solutions

The following services will be provided on a Time and Materials/Not to Exceed basis as needed:

C. Provide Water Pollution Control Manager/QSD/QSP $ 375 per week

$125/hr x 3 hours = $375/week x 11 weeks = $4,125 Not to Exceed

This based on the project lasting 11 weeks.

D. Provide QSD/QSP for Pre-Storm, During Storm or Post Storm Inspection $ 375 EA

$125/hr x 3 hours = $375 per visit

For quantity purposes, we estimate no more than 2 events

$375 per visit x 2 visits = $750

This based on the project lasting 11 weeks.

Fees will be due within 30 days of client's receipt of invoice. Fees will be billed monthly.

Timing and deliverables:

The SWPPP will be provided within 2 weeks of authorization to proceed. The document will be provided in hard copy (4 copies) and electronic PDF format.

Sincerely,

Robin Tully

Robin Tully, PE/QSD/QSP, President/Owner
License #: C6435

AUTHORIZATION TO PROCEED

Name: Date:

DBE/WBE/UDBE #38300, Exp. 2/4/2015
SBE #60919, Expires 1/31/2014
TAX ID 83-0499875, Annual Revenue under $500K

Please call if you want to see our full Statement of Qualifications

TULLY CONSULTING GROUP
180 S. FIRST ST, SUITE 9 • DIXON, CA • 95620
PHONE: 707-693-1926 • FAX 707-471-0318
ROBIN@TULLYGROUP.COM

pg 208 C

Items of Work	Bidder Normally Performs	Breakdown of Items	Amount ($)	% of Contract
SWPPP (Plan only)	~~Y~~ N	~~[illegible]~~ DBE used	6600	< 1%
Demo	Y	All	$39,000	3%
Traffic Control	Y	Yes	$25,000	2%
Striping	N	All	$45,000	3.3%
Concrete	Y	All	$240,000	18%
Fencing	N	All	$40,492	3%
Landscaping	N	All	$36,680	2.7%
Asphalt	N	All	$128,150	10%
Signs	Y	all	$16,500	1.2%

CALFIRONIA LABOR CODE RELATING TO APPRENTICES ON PUBLIC WORKS PROJECTS

See following links: www.dir.ca.gov and/or www.leginfo.ca.gov

The City of Sacramento and the Sacramento Metropolitan Air Quality District (SMAQMD) are conducting a joint pilot project to help meet Federal Clean Air Standards for the Sacramento region.

Attached is a Green Contracting Fleet Inventory Form. Please complete the form, remove it from the bid package and return it to SMAQMD in the postage paid envelope provided with the bid package. Please do not return the Green Contracting Fleet Inventory Form to the City of Sacramento with the bid documents or otherwise.

A limited amount of funds and other financial incentives may be available to qualified contractors participating in this joint project to assist qualified contractors with upgrading and/or replacing equipment and/or trucks.

Completing and returning the Green Contracting Fleet Inventory Form is strictly voluntary.

Voluntary Green Contracting Fleet Inventory List (On-Road Equipment)

In Partnership with the City of Sacramento and the Sacramento Metropolitan Air Quality Management District

Company Name:	
Contact Name:	
Company Address:	
City, State, ZIP:	
Company Phone:	

City Bid Information	
Department	
Project #	
ESBE/SBE?	

Instructions:

a) Please enter the vehicle / equipment information for each unit used in conjunction with your City of Sacramento Bid.
b) All fields are required for both on-road heavy-duty vehicles and off-road construction equipment over 50 HP.
c) Electronic version available at http://www.airquality.org/ceqa/index.shtml
d) For additional questions, please call (916) 874-4892

Please Submit To:

Kristian Damkier, P.E.
Sacramento Metropolitan AQMD
777 12th St, 3rd Floor
Sacramento, CA 95814-1908

#	VIN	License Plate	Vehicle Information			Engine Information				Annual Usage (miles)	Received Funding
			Make	Model	Year	Make	Model	Year	HP		
(ex)	*1XP5AAC35RG339402*	*1T45678*	*Kenworth*	*T-300*	*2002*	*Cummins*	*ISB*	*2002*	*250*	*35,000*	*No*

Voluntary Green Contracting Fleet Inventory List (Off-Road Equipment)

In Partnership with the City of Sacramento and the Sacramento Metropolitan AQMD

Company Name:	
Contact Name:	
Company Address:	
City, State, ZIP:	
Company Phone:	

City Bid Information	
Department	
Project #	
ESBE/SBE?	

Instructions:

a) Please enter the vehicle / equipment information for each unit used in conjunction with your City of Sacramento Bid.
b) All fields are required for both on-road heavy-duty vehicles and off-road construction equipment over 50 HP.
c) Electronic version is available at http://www.airquality.org/ceqa/index.shtml
d) For additional questions, please call (916) 874-4892

Please Submit To:

Kristian Damkier, P.E.
Sacramento Metropolitan AQMD
777 12th St, 3rd Floor
Sacramento, CA 95814-1908

#	Equipment Serial Number	Equipment Information				Engine Information				Annual Usage (hours)
		Make	Model	Type	Year	Make	Model	Year	HP	
(ex)	*48W34456*	*Caterpillar*	*631G*	*Scraper*	*2003*	*Caterpillar*	*3408E*	*2003*	*485*	*1,600*

TITLE VI

Title VI Language

APPENDIX A

During the performance of this contract, the contractor, for itself, its assignees and successors in interest (hereinafter referred to as the "contractor") agrees as follows:

(1) Compliance with Regulations:

The contractor shall comply with the Regulations relative to nondiscrimination in Federally-assisted programs of the Department of Transportation (hereinafter, "DOT") Title 49, Code of Federal Regulations, Part 21, as they may be amended from time to time, (hereinafter referred to as the Regulations), which are herein incorporated by reference and made a part of this contract.

(2) Nondiscrimination:

The contractor, with regard to the work performed by it during the contract, shall not discriminate on the grounds of race, color, or national origin in the selection and retention of subcontractors, including procurements of materials and leases of equipment. The contractor shall not participate either directly or indirectly in the discrimination prohibited by section 21.5 of the Regulations, including employment practices when the contract covers a program set forth in Appendix B of the Regulations.

(3) Solicitations for Subcontracts, Including Procurements of Materials and Equipment:

In all solicitations either by competitive bidding or negotiation made by the contractor for work to be performed under a subcontract, including procurements of materials or leases of equipment, each potential subcontractor or supplier shall be notified by the contractor of the contractor's obligations under this contract and the Regulations relative to nondiscrimination on the grounds of race, color, or national origin.

(4) Information and Reports:

The contractor shall provide all information and reports required by the Regulations or directives issued pursuant thereto, and shall permit access to its books, records, accounts, other sources of information, and its facilities as may be determined by the (Recipient) or the (Name of Appropriate Administration) to be pertinent to ascertain compliance with such Regulations, orders and instructions. Where any information required of a contractor is in the exclusive possession of another who fails or refuses to furnish this information the contractor shall so certify to the (Recipient), or the (Name of Appropriate Administration) as appropriate, and shall set forth what efforts it has made to obtain the information.

(5) Sanctions for Noncompliance:

In the event of the contractor's noncompliance with the nondiscrimination provisions of this contract, the (***Recipient***) shall impose such contract sanctions as it or the (***Name of Appropriate Administration***) may determine to be appropriate, including, but not limited to:

(a) withholding of payments to the contractor under the contract until the contractor complies, and/or

(b) cancellation, termination or suspension of the contract, in whole or in part.

(6) Incorporation of Provisions:

The contractor shall include the provisions of paragraphs (1) through (6) in every subcontract, including procurements of materials and leases of equipment, unless exempt by the Regulations, or directives issued pursuant thereto. The contractor shall take such action with respect to any subcontract or procurement as the (***Recipient***) or the (***Name of Appropriate Administration***) may direct as a means of enforcing such provisions including sanctions for non-compliance: Provided, however, that, in the event a contractor becomes involved in, or is threatened with, litigation with a subcontractor or supplier as a result of such direction, the contractor may request the (***Recipient***) to enter into such litigation to protect the interests of the (***Recipient***), and, in addition, the contractor may request the United States to enter into such litigation to protect the interests of the United States.

BIDDER'S LIST OF SUBCONTRACTORS (DBE and NON-DBE)- PART I

The bidder shall list all subcontractors (both DBE and non-DBE) in accordance with Section 2-1.054 of the Standard Specifications and per Title 49, Section 26.11 of the Code of Federal Regulations. This listing is required in addition to listing DBE Subcontractors elsewhere in the proposal. **Photocopy this form for additional firms.**

Firm Name/ Address/ City, State, ZIP	Phone/ Fax	Annual Gross Receipts	Description of Portion of Work to be Performed	Local Agency Use Only (Certified DBE?)
Name	*Phone*	☐ < $1 million		YES NO
Address		☐ < $5 million		*If YES list DBE #:*
		☐ < $10 million		
City State ZIP	*Fax*	☐ < $15 million		Age of Firm (Yrs.)
		☐ > $15 million		
Name	*Phone*	☐ < $1 million		YES NO
Address		☐ < $5 million		*If YES list DBE #:*
		☐ < $10 million		
City State ZIP	*Fax*	☐ < $15 million		Age of Firm (Yrs.)
		☐ > $15 million		
Name	*Phone*	☐ < $1 million		YES NO
Address		☐ < $5 million		*If YES list DBE #:*
		☐ < $10 million		
City State ZIP	*Fax*	☐ < $15 million		Age of Firm (Yrs.)
		☐ > $15 million		
Name	*Phone*	☐ < $1 million		YES NO
Address		☐ < $5 million		*If YES list DBE #:*
		☐ < $10 million		
City State ZIP	*Fax*	☐ < $15 million		Age of Firm (Yrs.)
		☐ > $15 million		

Distribution: 1) Original - Local Agency File

BIDDER'S LIST OF SUBCONTRACTORS (DBE and NON-DBE)- PART II

The bidder shall list all subcontractors who provided a quote or bid but were not selected to participate as a subcontractor on this project. This is required for compliance with Title 49, Section 26 of the Code of Federal Regulations. Photocopy this form for additional firms.

Firm Name/ Address/ City, State, ZIP	Phone/ Fax	Annual Gross Receipts	Description of Portion of Work to be Performed	Local Agency Use Only (Certified DBE?)
Name	*Phone*	☐ < $1 million		YES
		☐ < $5 million		NO
Address		☐ < $10 million		*If YES list DBE #:*
	Fax	☐ < $15 million		
City State ZIP		☐ > $15 million		Age of Firm (Yrs.)
Name	*Phone*	☐ < $1 million		YES
		☐ < $5 million		NO
Address		☐ < $10 million		*If YES list DBE #:*
	Fax	☐ < $15 million		
City State ZIP		☐ > $15 million		Age of Firm (Yrs.)
Name	*Phone*	☐ < $1 million		YES
		☐ < $5 million		NO
Address		☐ < $10 million		*If YES list DBE #:*
	Fax	☐ < $15 million		
City State ZIP		☐ > $15 million		Age of Firm (Yrs.)
Name	*Phone*	☐ < $1 million		YES
		☐ < $5 million		NO
Address		☐ < $10 million		*If YES list DBE #:*
	Fax	☐ < $15 million		
City State ZIP		☐ > $15 million		Age of Firm (Yrs.)

Distribution: 1) Original – Local Agency File

SECTION NO. 14 - CONTRACT FORMS

Agreement
Payment Bond
Performance Bond
Worker's Compensation Certification
Construction & Demolition Debris Recycling Requirements
Pay Request Application
Schedule of Values
Guarantee
NTP Sample

FOLLOWING FORMS TO BE FILLED OUT

AND SIGNED

ONLY

IF AWARDED CONTRACT

AGREEMENT
(Construction Contract Over $25,000)

THIS AGREEMENT, dated for identification March 25, 2014, is made and entered into between the CITY OF SACRAMENTO, a municipal corporation ("City"), and
B&M Builders 11151 Trade Center Drive, #200, Rancho Cordova, CA 95670("Contractor").

The City and Contractor hereby mutually agree as follows:

1. CONTRACT DOCUMENTS

The Contract Documents, sometimes also referred to as the "Contract," consist of the following items, which are hereby incorporated by reference as if set forth in full in this Agreement:

The Notice to Contractors
The Proposal Form submitted by the Contractor
The Instructions to Bidders
~~The Emerging and Small Business Enterprise (ESBE) Requirements~~
The Requirements for the Non-Discrimination in Employee Benefits by City Contractors Ordinance and the Declaration of Compliance
The City's Reference Guide for Construction Contracts
The Addenda, if any
This Agreement
The Standard Specifications
The Special Provisions
The Plans and Technical Specifications
The drawings and other data and all developments thereof prepared by City pursuant to the Contract
Any modifications of any of the foregoing made or approved by City, including but not limited to duly authorized change orders.

Unless specifically noted otherwise, references to the "Standard Specifications" shall mean and refer to the Standard Specifications for Public Construction of the City of Sacramento approved by the Sacramento City Council on June 4, 2007 (Resolution No. 2007-350), and any subsequent amendments thereto approved by the Sacramento City Council or the Sacramento City Manager. Work called for in any one Contract Document and not mentioned in another is to be performed and executed as if mentioned in all Contract Documents. The table of contents, titles and headings contained in the Contract Documents are provided solely to facilitate reference to various provisions of the Contract Documents and in no way affect or limit the interpretation of the provisions to which they refer.

2. DEFINITIONS

Unless otherwise specifically provided herein, all words and phrases defined in the Standard Specifications shall have the same meaning and intent in this Agreement.

3. AGREEMENT CONTROLS

In the event of a conflict between any of the terms and conditions set forth in this Agreement and the terms and conditions set forth in other Contract Documents, the terms and conditions set forth

in this Agreement shall prevail, except that the provisions of any duly authorized change order shall prevail over any conflicting provisions of this Agreement.

4. SCOPE OF CONTRACT

Contractor agrees to furnish all tools, equipment, apparatus, facilities, labor, material and transportation necessary to perform and complete in a good and workmanlike manner to the satisfaction of City, all the Work called for in the Contract Documents entitled:

WEST TUNNEL RAMPS ACCESS PROJECT (PN: T15029031)

including the Work called for in the following alternative bid items described in the Proposal Form:

_____

Contractor agrees to perform such Work in the manner designated in and in strict conformity with the Contract Documents.

5. CONTRACT AMOUNT AND PAYMENTS

City agrees to pay and Contractor agrees to accept, as complete payment for the above Work, in accordance with the schedule and procedures set forth in the Contract Documents and subject to deductions, withholdings and additions as specified in the Contract Documents, a total sum that shall not exceed the total bid amount set forth in Contractor's Proposal Form. In addition, subject to deductions, withholdings and additions as specified in the Contract Documents, payment for individual items of the Work shall be computed as follows:

(A) For items of the Work for which a lump sum price is specified in Contractor's Proposal Form, Contractor shall be paid the lump sum price(s) specified in Contractor's Proposal Form; and

(B) For items of the Work for which a unit price is specified in Contractor's Proposal Form, Contractor shall be paid the sum computed at such unit price, or computed at a different price if such different price is determined by City in accordance with the Standard Specifications, based on the actual amount of each such item performed and/or furnished and incorporated in the Work; provided that in no event shall the total sum for a unit price item exceed the total bid amount set forth for such item in the Contractor's Proposal Form, unless authorized by Change Order.

6. PROGRESS PAYMENTS

Subject to the terms and conditions of the Contract, City shall cause payments to be made upon demand of Contractor as follows:

(A) On or about the first of the month, the Engineer shall present to the Contractor a statement showing the amount of labor and materials incorporated in the Work through the twentieth (20) calendar day of the preceding month. After both Contractor and Engineer approve the statement in writing, and the City's labor compliance officer provides written approval, the City shall issue a certificate for ninety-five (95) percent of the amount it shall find to be due, subject to any deductions or withholdings authorized or required under the Contract or any applicable Laws or Regulations.

(B) No inaccuracy or error in said monthly estimates shall operate to release Contractor from damages arising from such Work or from enforcement of each and every provision of the Contract Documents, and City shall have the right subsequently to correct any error made in any estimate for payment.

(C) Contractor shall not be paid for any defective or improper Work.

(D) The remaining five (5) percent of the value of the Work performed under the Contract, if unencumbered and subject to any deductions or withholdings authorized or required under the Contract or any applicable Laws or Regulations, shall be released not later than sixty (60) days after completion and final acceptance of the Work by City. Acceptance by Contractor of the final payment shall constitute a waiver of all claims against the City arising under the Contract Documents, except for disputed claims in stated amounts that the Contractor specifically reserves in writing, but only to the extent that the Contractor has complied with all procedures and requirements applicable to the presentation and processing of such claim(s) under the Contract Documents. Contractor shall be entitled to substitute securities for retention or to direct that payments of retention be made into escrow, as provided in Public Contract Code Section 22300, upon execution of the City's Escrow Agreement for Security Deposits in Lieu of Retention.

(E) The parties agree that, for purposes of the timely progress payment requirements specified in Public Contract Code Section 20104.50, the date that the City receives a statement jointly approved by the Contractor and the Engineer as provided above shall be deemed to constitute the date that City receives an undisputed and properly submitted payment request from the Contractor. Progress payments not made within 30 days after this date may be subject to payment of interest as provided in Public Contract Code Section 20104.50.

7. RETENTION OF SUMS CHARGED AGAINST CONTRACTOR

When, under the provisions of this Contract or any applicable Laws or Regulations, City is authorized or required to withhold, deduct or charge any sum of money against Contractor, City may deduct and retain the amount of such charge from the amount of the next succeeding progress estimate(s), or from any other moneys due or that may become due Contractor from City. If, on completion or termination of the Contract, sums due Contractor are insufficient to pay City's charges, City shall have the right to recover the balance from Contractor or its Sureties.

8. COMMENCEMENT AND PROSECUTION OF WORK

Contractor shall commence the Work not later than fifteen (15) working days after the date of the written Notice to Proceed from City to Contractor and shall diligently prosecute the Work to final completion. The phase "commence the Work" means to engage in a continuous program on-site including, but not limited to, site clearance, grading, dredging, land filling and the fabrications, erection, or installation of the Work. The Notice to Proceed shall be issued within fifteen (15) calendar days following execution of the Agreement by the City and the filing by Contractor of the required Bonds and proof of insurance, provided that the Engineer may delay issuance of the Notice to Proceed if the Engineer determines in the Engineer's sole discretion that conditions on the site of the Work are unsuitable for commencement of the Work. After the Notice to Proceed is issued, the continuous prosecution of Work by Contractor shall be subject only to Excusable Delays as defined in this Agreement.

9. TIME OF COMPLETION

The entire Work shall be brought to completion in the manner provided for in the Contract Documents on or before 55 WORKING days from the date of the Notice to Proceed (hereinafter called the "Completion Date") unless extensions of time are granted in accordance with the Contract Documents.

Failure to complete the entire Work by the Completion Date and in the manner provided for in the Contract Documents shall subject Contractor to liquidated damages as provided in this Agreement. Time is and shall be of the essence in the performance of the Contract and the Work.

10. PAYMENTS DO NOT IMPLY ACCEPTANCE OF WORK

The payment of any progress payment, or the acceptance thereof by Contractor, shall not constitute acceptance of the Work or any portion thereof and shall in no way reduce the liability of Contractor to replace unsatisfactory work or material, whether or not the unsatisfactory character of such work or material was apparent or detected at the time such payment was made.

11. ACCEPTANCE NOT RELEASE

Contractor shall correct immediately any defective or imperfect work or materials that may be discovered before final acceptance of the entire Work, whether or not such defect or imperfection was previously noticed or identified by the City. The inspection of the Work, or any part thereof, shall not relieve Contractor of any of its obligations to perform satisfactory work as herein specified.

Failure or neglect on the part of City or any of its officers, employees or authorized agents to discover, identify, condemn or reject defective or imperfect work or materials shall not be construed to imply an acceptance of such work or materials, if such defect or imperfection becomes evident at any time prior to final acceptance of the entire Work, nor shall such failure or neglect be construed as barring City from enforcing Contractor's warranty(ies) or otherwise recovering damages or such a sum of money as may be required to repair or rebuild the defective or imperfect work or materials whenever City may discover the same, subject only to any statutes of limitation that may apply to any such claim.

12. CITY'S RIGHT TO TAKE POSSESSION OF THE WORK IN WHOLE OR IN PART

The City shall have the right at any time to enter upon the Work and perform work not covered by this Contract, or to occupy and use a portion of the Work, prior to the date of the final acceptance of the Work as a whole, without in any way relieving Contractor of any obligations under this Contract.

13. NO WAIVER OF REMEDIES

Neither the inspection by City, its officers, employees or agents, nor any certificate or other approval for the payment of money, nor any payment for, nor acceptance of the whole or any part of the Work by City, nor any extensions of time, nor any position taken by City, its officers, employees or its agents shall operate as a waiver of any provision of the Contract Documents nor of any power herein reserved to City or any right to damages herein provided, nor shall any waiver of any breach of this Agreement be held to be a waiver of any other or subsequent breach. All remedies provided in the Contract Documents shall be taken and construed as cumulative; in

addition to each and every other remedy herein provided, the City shall have any and all equitable and legal remedies that it would in any case have.

14. WARRANTY

Except as otherwise expressly provided in the Contract Documents, and excepting only items of routine maintenance, ordinary wear and tear and unusual abuse or neglect by City, Contractor warrants and guarantees all Work executed and all supplies, materials and devices of whatsoever nature incorporated in or attached to the Work, or otherwise provided as a part of the Work pursuant to the Contract, to be absolutely free of all defects of workmanship and materials for a period of one year after final acceptance of the entire Work by the City. Contractor shall repair or replace all work or material, together with any other work or material that may be displaced or damaged in so doing, that may prove defective in workmanship or material within this one year warranty period without expense or charge of any nature whatsoever to City.

In the event that Contractor shall fail to comply with the conditions of the foregoing warranty within ten (10) days after being notified of the defect in writing, City shall have the right, but shall not be obligated, to repair, or obtain the repair of, the defect and Contractor shall pay to City on demand all costs and expense of such repair. Notwithstanding anything herein to the contrary, in the event that any defect in workmanship or material covered by the foregoing warranty results in a condition that constitutes an immediate hazard to public health or safety, or any property interest, or any person, City shall have the right to immediately repair, or cause to be repaired, such defect, and Contractor shall pay to City on demand all costs and expense of such repair. The foregoing statement relating to hazards to health, safety or property shall be deemed to include both temporary and permanent repairs that may be required as determined in the sole discretion and judgment of City.

In addition to the above, the Contractor shall make a written assignment of all manufacturer's and other product warranties to the City, prior to completion and final acceptance of the Work by City.

The Contractor's Performance Bond shall secure the performance of the Contractor's obligations under this Section 14, and the Contractor and its Surety shall be jointly and severally liable for these obligations.

15. LIQUIDATED DAMAGES IF WORK NOT COMPLETED ON TIME

(A) The actual fact of the occurrence of damages and the actual amount of the damages that City would suffer if the entire Work, and/or any specified portion thereof, were not completed within the time(s) specified herein are dependent upon many circumstances and conditions that could prevail in various combinations, and for this reason, it is impracticable and extremely difficult to fix the actual damages. Damages that City would suffer in the event of such delay include: loss of the use of the project; expenses of prolonged assignment to the project of an architectural and/or engineering staff; prolonged costs of administration, inspection, and supervision; increased operational expenses and/or impaired operation of other facilities dependent upon completion of the project; and the loss and inconvenience suffered by the public within the City of Sacramento by reason of the delay in the completion of the project or portion thereof. Accordingly, the parties agree, and by execution of this Agreement, Contractor acknowledges that it understands and agrees, that the amount(s) set forth herein as liquidated damages reflect the parties' best efforts at the time of entering into the Contract to estimate the

damages that may be incurred by City and the public due to the Contractor's delay in completion of the Work and/or any specified portion thereof, and shall be presumed to be the amount of damages sustained by the failure of Contractor to complete the entire Work and/or any specified portion thereof within the time(s) specified herein.

(B) Contractor shall pay liquidated damages to City for failure to complete the entire Work by the Completion Date (as extended in accordance with the Contract Documents, if applicable) in the amount of TWO THOUSAND DOLLARS ($2,000.00) for each working day after the Completion Date (as extended in accordance with the Contract Documents, if applicable), continuing to the time at which the entire Work is completed. Such amount is the actual cash value agreed upon by the City and Contractor as the loss to City and the public resulting from Contractor's default.

The parties agree, and by execution of this Agreement, Contractor acknowledges that it understands and agrees, that the foregoing provisions provide for the imposition of liquidated damages from the Completion Date (as extended in accordance with the Contract Documents, if applicable) until the date of completion of the entire Work as determined by the Engineer in accordance with Section 8-4 of the Standard Specifications, whether or not the Work or any portion thereof is claimed or determined to be substantially complete prior to such date of completion.

(C) In the event Contractor shall become liable for liquidated damages, City, in addition to all other remedies provided by law, shall have the right to withhold any and all payments that otherwise would be or become due Contractor until the liability of Contractor under this section is finally determined. City shall have the right to use and apply such payments, in whole or in part, to reimburse City for all liquidated damages due or to become due to City. Any remaining balance of such payments shall be paid to Contractor only after discharge in full of all liability incurred by Contractor under this section or otherwise under any provision of the Contract Documents or any applicable Law or Regulation. If the sum so retained by City is not sufficient to discharge all such liabilities of Contractor, Contractor shall continue to remain liable to City until all such liabilities are satisfied in full. No failure by City to withhold any payment as specified above shall in any manner be construed to constitute a release of any such liabilities nor a waiver of the City's right to withhold payment for such liabilities.

16. INDEMNITY AND HOLD HARMLESS

(A) Contractor shall defend, hold harmless and indemnify the City, its officers, employees, and agents, and each and every one of them, from and against any and all actions, damages, costs, liabilities, claims, demands, losses, judgments, penalties, costs and expenses of every type and description, whether arising on or off the site of the Work, including, but not limited to, any fees and/or costs reasonably incurred by City's staff attorneys or outside attorneys and any fees and expenses incurred in enforcing this provision (hereafter collectively referred to as "Liabilities"), including but not limited to Liabilities arising from personal injury or death, damage to personal, real or intellectual property or the environment, contractual or other economic damages, or regulatory penalties, arising out of or in any way connected with performance of or failure to perform the Work by the Contractor, any subcontractor or agent, anyone directly or indirectly employed by any of them or anyone for whose acts any of them may be liable, whether or not (i) such Liabilities are caused in part by a party indemnified hereunder, or (ii) such Liabilities are litigated, settled or reduced to judgment; provided that the foregoing indemnity does not apply to liability for damages for

death or bodily injury to persons, injury to property, or other loss, damage or expense to the extent arising from (i) the sole negligence or willful misconduct of, or defects in design furnished by, City, its agents, servants, or independent contractors who are directly responsible to City, or (ii) the active negligence of City.

(B) The existence or acceptance by City of any of the insurance policies or coverages described in this Agreement shall not affect or limit any of City's rights under this Section 16, nor shall the limits of such insurance limit the liability of Contractor hereunder. The provisions of this Section 16 shall survive any expiration or termination of the Contract.

17. CONTRACTOR SHALL ASSUME RISKS

Until the completion and final acceptance by City of all Work under this Contract, the Work shall be under Contractor's responsible care and charge, and Contractor, at no cost to City, shall rebuild, repair, restore and make good all injuries, damages, re-erections, and repairs occasioned or rendered necessary by accidental causes of any nature, to all or any portions of the Work.

18. GENERAL LIABILITY OF CONTRACTOR

Except as otherwise herein expressly stipulated, Contractor shall perform all the Work and furnish all the labor, materials, tools, equipment, apparatus, facilities, transportation, power and light, and appliances, necessary or proper for performing and completing the Work herein required in the manner and within the time herein specified. The mention of any specific duty or liability of Contractor shall not be construed as a limitation or restriction of any general liability or duty of Contractor, and any reference to any specific duty or liability shall be construed to be solely for the purpose of explanation.

19. INSURANCE

During the entire term of this Contract and until completion and final acceptance of the Work as provided in the Contract Documents, Contractor shall maintain in full force and effect the insurance coverage described in this section.

Full compensation for all premiums that Contractor is required to pay for the insurance coverage described herein shall be included in the compensation specified for performance of the Work under the Contract. No additional compensation will be provided for Contractor's insurance premiums.

It is understood and agreed by the Contractor that its liability to the City shall not in any way be limited to or affected by the amount of insurance coverage required of or carried by the Contractor.

(A) Minimum Scope and Limits of Insurance Coverage

(1) Commercial General Liability Insurance, providing coverage at least as broad as ISO CGL Form 00 01 on an occurrence basis for bodily injury, including death, of one or more persons, property damage and personal injury, with limits of not less than one million dollars ($1,000,000) per occurrence. The policy shall provide contractual liability and products and completed operations coverage for the term of the policy.

(2) Automobile Liability Insurance providing coverage at least as broad as ISO Form CA 00 01 on an occurrence basis for bodily injury, including death, of one or more persons, property damage and personal injury, with limits of not less than one million dollars ($1,000,000) per occurrence. The policy shall provide coverage for owned, non-owned and/or hired autos as appropriate to the operations of the Contractor.

(3) Workers' Compensation Insurance with statutory limits, and Employers' Liability Insurance with limits of not less than one million dollars ($1,000,000). The Worker's Compensation policy shall include a waiver of subrogation.

(B) Additional Insured Coverage

(1) Commercial General Liability Insurance: The City, its officials, employees and volunteers shall be covered by policy terms or endorsement as additional insureds as respects general liability arising out of activities performed by or on behalf of Contractor, products and completed operations of Contractor, and premises owned, leased or used by Contractor. The general liability additional insured endorsement must be signed by an authorized representative of the insurance carrier.

If the policy includes a blanket additional insured endorsement or contractual additional insured coverage, the above signature requirement may be fulfilled by submitting that document with a signed declaration page referencing the blanket endorsement or policy form.

(2) Automobile Liability Insurance: The City, its officials, employees and volunteers shall be covered by policy terms or endorsement as additional insureds as respects auto liability.

(C) Other Insurance Provisions

The policies are to contain, or be endorsed to contain, the following provisions:

(1) Contractor's insurance coverage shall be primary insurance as respects City, its officials, employees and volunteers. Any insurance or self-insurance maintained by City, its officials, employees or volunteers shall be in excess of Contractor's insurance and shall not contribute with it.

(2) Any failure to comply with reporting provisions of the policies shall not affect coverage provided to City, its officials, employees or volunteers.

(3) Coverage shall state that Contractor's insurance shall apply separately to each insured against whom claim is made or suit is brought, except with respect to the limits of the insurer's liability.

(4) City will be provided with thirty (30) days written notice of cancellation or material change in the policy language or terms.

(D) Acceptability of Insurance

Insurance shall be placed with insurers with a Bests' rating of not less than A:V. Self-insured retentions, policy terms or other variations that do not comply with the requirements of this Section 19 must be declared to and approved by the City Risk Management Division in writing prior to execution of this Agreement.

(E) Verification of Coverage

(1) Contractor shall furnish City with certificates and required endorsements evidencing the insurance required. The certificates and endorsements shall be forwarded to the City representative designated by City. Copies of policies shall be delivered to the City on demand. Certificates of insurance shall be signed by an authorized representative of the insurance carrier.

(2) The City may withdraw its offer of contract or cancel the Contract if the certificates of insurance and endorsements required have not been provided prior to execution of this Agreement. The City may withhold payments to Contractor and/or cancel the Contract if the insurance is canceled or Contractor otherwise ceases to be insured as required herein.

(F) Subcontractors

Contractor shall require and verify that all subcontractors maintain insurance coverage that meets the minimum scope and limits of insurance coverage specified in subsection A, above.

20. FAILURE TO MAINTAIN BONDS OR INSURANCE

If, at any time during the performance of this Contract, Contractor fails to maintain any item of the bonds and/or insurance required under the Contract in full force and effect, Contractor shall immediately suspend all work under the Contract and notify City in writing of such failure. After such notice is provided, or if City discovers such failure and notifies Contractor, the City thereafter may withhold all Contract payments due or that become due until notice is received by City that such bonds and/or insurance have been restored in full force and effect and that the premiums therefor have been paid for a period satisfactory to the Division of Risk Management. Contractor shall not resume work until notified by City to do so, and the City shall have no responsibility or liability for any costs incurred by Contractor as a result of such suspension of Work.

In addition to the foregoing, any failure to maintain any item of the required bonds and/or insurance at any time during the performance of this Contract will be sufficient cause for termination of the Contract by City.

The Contractor shall be solely responsible for, and shall defend, indemnify and hold harmless the City, its officers, employees and agents against and from, any and all damages, claims, losses, actions, costs or other expenses of any kind incurred by any party as a direct or indirect result of any suspension of Work or termination of the Contract under the provisions of this Section.

21. EXCUSABLE DELAYS

For the purpose of these Contract Documents, the term "Excusable Delay" shall mean, and is limited to, delay caused directly by: acts of God; acts of a public enemy; fires; inclement weather

as determined by the Engineer; riots; insurrections; epidemics; quarantine restrictions; strikes; lockouts; sitdowns; acts of a governmental agency; priorities or privileges established for the manufacture, assemble, or allotment of materials necessary in the Work by order, decree or otherwise of the United States or by any department, bureau, commission, committee, agent, or administrator of any legally constituted public authority; changes in the Work ordered by City insofar as they necessarily require additional time in which to complete the Work; the prevention of Contractor from commencing or prosecuting the Work because of the acts of others, excepting Contractor's subcontractors or suppliers; or the prevention of Contractor from commencing or prosecuting the Work because of a Citywide failure of public utility service.

The term "Excusable Delay" shall specifically not include: (i) any delay that could have been avoided by the exercise of care, prudence, foresight and diligence on the part of Contractor; (ii) any delay in the prosecution of any part of the Work that does not constitute a Controlling Operation, whether or not such delay is unavoidable; (iii) any reasonable delay resulting from time required by City for review of any Contractor submittals and for the making of surveys, measurements and inspection; and, (iv) any delay arising from an interruption in the prosecution of the Work on account of reasonable interference by other Contractors employed by City that does not necessarily prevent the completion of the entire Work within the time specified. Excusable Delays, if any, shall operate only to extend the Completion Date (not in excess of the period of such delay as determined by City) and shall not under any circumstances increase the amount City is required to pay Contractor except as otherwise provided in these Contract Documents.

22. CONTRACTOR TO SERVE NOTICE OF DELAYS

Whenever Contractor foresees any delay in the prosecution of the Work, and in any event as soon as possible (not to exceed a period of ten (10) calendar days) after the initial occurrence of any delay that Contractor regards as or may later claim to be an Excusable Delay, the Contractor shall notify the Engineer in writing of such delay and its cause, in order that the Engineer: (i) may take immediate steps to prevent if possible the occurrence or continuance of the delay; or (ii) if this cannot be done, may determine whether the delay is to be considered excusable, how long it continues, and to what extent the prosecution and completion of the Work are delayed thereby. Said written notice shall constitute an application for an extension of time only if the notice requests such an extension and sets forth the Contractor's estimate of the additional time required together with a full description of the cause of the delay relied upon.

After the completion of any part or whole of the Work, the Engineer, in estimating the amount due Contractor, will assume that any and all delays that may have occurred in its prosecution and completion were not Excusable Delays, except for such delays for which the Contractor has provided timely written notice as required herein, and that the Engineer has found to be excusable. Contractor shall not be entitled to claim Excusable Delay for any delay for which the Contractor failed to provide such timely written notice.

23. EXTENSION OF TIME

If the Contractor complies with Section 22, above, and the Engineer finds a delay claimed by the Contractor to be an Excusable Delay, the Contractor shall be allowed an extension of time to complete the Work that is proportional to the period of Excusable Delay determined by the Engineer, subject to the approval by City of a change order granting such time extension. During a duly authorized extension for an Excusable Delay, City shall not charge liquidated damages against the Contractor for such delay.

If the City extends the time to complete the Work as provided herein, such extension shall in no way release any warranty or guarantee given by Contractor pursuant to the provisions of the Contract Documents, nor shall such extension of time relieve or release the sureties of the Bonds provided pursuant to the Contract Documents. By executing such Bonds, the Sureties shall be deemed to have expressly agreed to any such extension of time. The granting of any extension of time as provided herein shall in no way operate as a waiver on the part of City of its rights under this Contract, excepting only extension of the Completion Date for such period of Excusable Delay as may be determined by the Engineer and approved by a duly authorized change order.

24. NO PAYMENT FOR DELAYS

No damages or compensation of any kind shall be paid to Contractor or any subcontractor because of delays in the progress of the Work whether or not such delays qualify for extension of time under this Agreement; except that this provision shall not preclude the recovery of damages for a delay caused by the City that is unreasonable under the circumstances and that is not within the contemplation of the parties, provided that the Contractor timely submits all such written notice(s) and fully complies with such other procedures as may be specified in the Contract Documents or any Laws or Regulations for Contractor to claim damages for such delay.

25. CHANGES IN THE WORK

Changes in the Work authorized or directed in accordance with the Contract Documents and extensions of time of completion made necessary by reason thereof shall not in any way release any warranty or guarantee given by Contractor pursuant to the provisions of the Contract Documents, nor shall such changes in the Work relieve or release the Sureties on Bonds provided pursuant to the Contract Documents. By executing such Bonds, the Sureties shall be deemed to have expressly agreed to any such change in Work and to any extension of time made by reason thereof.

26. TERMINATION AFTER COMPLETION DATE

In addition to any other rights City may have, if any services or work required under the Contract (including but not limited to punch list items) are not completed as of the Completion Date (as adjusted by any extensions of time for Excusable Delays granted pursuant to the Contract Documents), City may terminate the Contract at any time after the Completion Date (as adjusted by any extensions of time for Excusable Delays granted pursuant to the Contract Documents), by providing a written notice to Contractor specifying the date of termination. Such notice also may specify conditions or requirements that Contractor must meet to avoid termination of the Contract on such date. If Contractor fails to fulfill all such conditions and requirements by such termination date, or, if no such conditions or requirements are specified, Contractor shall cease rendering services and performing work on such termination date, and shall not be entitled to receive any compensation for services rendered or work performed after such termination date. In the event of such termination, Contractor shall remain liable to City for liquidated damages incurred for any period of time prior to the termination date.

In addition to any other charges, withholdings or deductions authorized under the Contract or any Laws or Regulations, if City terminates the Contract pursuant to this section, City may withhold and deduct from any payment and/or retention funds otherwise due Contractor any sum necessary to pay the City's cost of completing or correcting, or contracting for the completion or correction of, any services or work under the Contract that are not completed to the satisfaction of the City

or that otherwise are deficient or require correction as of such termination date, including but not limited to incomplete punch list items. Such costs shall include all of the City's direct and indirect costs incurred to complete or correct such services or work, including the City's administrative and overhead costs. If the amount of payment(s) and/or retention funds otherwise due the Contractor are insufficient to pay such costs, City shall have the right to recover the balance of such costs from the Contractor and/or its Surety(ies).

27. TERMINATION FOR CONVENIENCE

Upon written notice to the Contractor, the City may at any time, without cause and without prejudice to any other right or remedy of the City, elect to terminate the Contract for the convenience of City. In such case, the Contractor shall be paid (without duplication of any items, and after deduction and/or withholding of any amounts authorized to be deducted or withheld by the Contract Documents or any Laws or Regulations):

(A) For Work executed in accordance with the Contract Documents prior to the effective date of termination and determined to be acceptable by the Engineer, including fair and reasonable sums for overhead and profit on such Work;

(B) For reasonable claims, costs, losses, and damages incurred in settlement of terminated contracts with subcontractors, suppliers, and others; and

(C) For reasonable expenses directly attributable to termination.

Contractor shall not be paid for any loss of anticipated profits or revenue for any Work not performed prior to termination, nor for any economic loss arising out of or resulting from such termination, except for the payments listed in this section. Contractor's warranty under Section 14 of this Agreement shall apply, and Contractor shall remain responsible for all obligations related to such warranty, with respect to all portions of the Work performed prior to the effective date of the termination for convenience pursuant to this section. The City shall be entitled to have any or all remaining Work performed by other contractors or by any other means at any time after the effective date of a termination for convenience pursuant to this section.

28. TERMINATION FOR BREACH OF CONTRACT

If Contractor abandons the Work under this Contract, or if the Contract or any portion of the Contract is sublet or assigned without the consent of the City, or if the Engineer determines in the Engineer's sole discretion that the conditions of the Contract in respect to the rate of progress of the Work are not being fulfilled or any part thereof is unnecessarily delayed, or if Contractor violates or breaches, or fails to execute in good faith, any of the terms or conditions of the Contract, or if Contractor refuses or fails to supply enough properly skilled labor or materials or refuses or fails to make prompt payment to subcontractors for material or labor, or if Contractor disregards any Laws or Regulations or proper instruction or orders of the Engineer, then, notwithstanding any provision to the contrary herein, the City may give Contractor and its Sureties written notification to immediately correct the situation or the Contract shall be terminated.

In the event that such notice is given, and, in the event such situation is not corrected, or arrangements for correction satisfactory to the City are not made, within ten (10) calendar days from the date of such notice or within such other period of time as may be specified by the City

in the notice, the Contract shall upon the expiration of said period cease and terminate. In the event of any such termination, City may take over the Work and prosecute the Work to completion, or otherwise, and the Contractor and its Sureties shall be liable to City for any cost occasioned City thereby, as hereinafter set forth.

In the event City completes the Work, or causes the Work to be completed, no payment of any kind shall be made to Contractor until the Work is complete. The cost of completing the Work, including but not limited to, extra costs of project administration and management incurred by City, both direct or indirect, shall be deducted from any sum then due, or that becomes due, to Contractor from City. If sums due to Contractor from City are less than the cost of completing the Work, Contractor and its Sureties shall pay City a sum equal to this difference on demand. In the event City completes the Work, and there is a sum remaining due to Contractor after City deducts the costs of completing the Work, then City shall pay such sum to Contractor. The Contractor and Contractor's Sureties shall be jointly and severally liable for all obligations imposed on Contractor hereunder.

No act by City before the Work is finally accepted, including, but not limited to, exercise of other rights under the Contract, actions at law or in equity, extensions of time, payments, assessments of liquidated damages, occupation or acceptance of any part of the Work, waiver of any prior breach of the Contract or failure to take action pursuant to this section upon the happening of any prior default or breach of Contractor, shall be construed to be a waiver or estoppel of the City's right to act pursuant to this Section upon any subsequent event, occurrence or failure by Contractor to fulfill the terms and conditions of the Contract. The rights of City to terminate the Contract pursuant to this Section and pursuant to Sections 26 and 27 are cumulative and are in addition to all other rights of City pursuant to the Contract and at law or in equity.

29. CONTRACTOR BANKRUPT

If Contractor should commence any bankruptcy proceeding, or if Contractor is adjudged a bankrupt, or if Contractor makes any assignment for the benefit of creditors, or if a receiver is appointed on account of Contractor's insolvency, then the City may, without prejudice to any other right or remedy, terminate the Contract and complete the work by giving notice as provided in Section 28 above.

30. SURETIES' OBLIGATIONS UPON TERMINATION

If the City terminates the Contract pursuant to Section 28 or Section 29 above:

(A) The Surety under Contractor's performance bond shall be fully responsible for all of the Contractor's remaining obligations of performance under the Contract as if the Surety were a party to the Contract, including without limitation Contractor's obligations, as provided in the Contract Documents, to complete and provide a one-year warranty of the entire Work, pay liquidated damages and indemnify, defend and hold harmless City, up to the full amount of the performance bond.

(B) The Surety under Contractor's payment bond shall be fully responsible for the performance of all of the Contractor's remaining payment obligations for work, services, equipment or materials performed or provided in connection with the Work or any portion thereof, up to the full amount of the payment bond.

31. ACCOUNTING RECORDS OF CONTRACTOR

During performance of the Contract and for a period of three (3) years after completing the entire Work, Contractor shall maintain all accounting and financial records related to the Contract and performance of the Work in accordance with generally accepted accounting practices, and shall keep and make such records available for inspection and audit by representatives of the City upon reasonable written notice.

32. USE TAX REQUIREMENTS

During the performance of this Agreement, CONTRACTOR, for itself, its assignees and successors in interest, agrees as follows:

(A) Use Tax Direct Payment Permit: For all leases and purchases of materials, equipment, supplies, or other tangible personal property used to perform the Agreement and shipped from outside California, the Contractor and any subcontractors leasing or purchasing such materials, equipment, supplies or other tangible personal property shall obtain a Use Tax Direct Payment Permit from the California State Board of Equalization ("SBE") in accordance with the applicable SBE criteria and requirements.

(B) Sellers Permit: For any construction contract and any construction subcontract in the amount of $5,000,000 or more, Contractor and the subcontractor(s) shall obtain sellers permits from the SBE and shall register the jobsite as the place of business for the purpose of allocating local sales and use tax to the City. Contractor and its subcontractors shall remit the self-accrued use tax to the SBE, and shall provide a copy of each remittance to the City.

(C) The above provisions shall apply in all instances unless prohibited by the funding source for the Agreement.

IN WITNESS WHEREOF, the parties hereto have signed this Agreement on the date set for opposite their names.

CONTRACTOR

Under penalty of perjury, I certify that the taxpayer identification number and all other information provided here are correct.

DATE 3/6/14

BY _____

Patrick Mullen

Print Name

President

Title

BY _____

Jonathan Braun

Print Name

Vice Pres.

Title

51-0539817

Federal ID#

C2728421

State ID#

1004351

City of Sacramento Business Operation Tax Certificate No. (City will not award contract until Certificate Number is obtained)

Type of Business Entity *(check one)*:

_____ Individual/Sole Proprietor
_____ Partnership
_X_ Corporation
_____ Limited Liability Company
_____ Other (*please specify:*_____)

SIGN HERE

CITY OF SACRAMENTO
a municipal corporation

DATE _____

BY _____
For: Jerry Way, Director of Public Works
City Manager

Original Approved As To Form:

_____
City Attorney

Attest:

_____
City Clerk

PREMIUM IS FOR CONTRACT TERM
AND IS SUBJECT TO ADJUSTMENT
BASED ON FINAL CONTRACT AMOUNT.

CITY OF SACRAMENTO PERFORMANCE BOND

Department of PUBLIC WORKS
Page 1 of 1

Bond No.: PB11511000783
Premium: $16,843.00
Effective Date of Bond: April 18, 2014

WHEREAS, the City of Sacramento, State of California, hereinafter called City, has conditionally awarded to (*here insert full name and address of Contractor*): B&M Builders 11151 Trade Center Drive, #200, Rancho Cordova, CA 95670

as principal, hereinafter called Contractor, a contract for construction of:

West Tunnel Ramps Access Project (PN: T15029031)

which contract is by reference incorporated herein and made a part hereof as if the Surety named below were a party to the contract, and is hereinafter referred to as the Contract; and

WHEREAS, under the terms of the Contract, Contractor is required to furnish a bond for the faithful performance of the Contract.

NOW, THEREFORE, we the Contractor and (*here insert full name and address of Surety*): Philadelphia Indemnity Insurance Company, 261 South Lake Ave., Ste. 360, Pasadena, CA 91101, a corporation duly authorized and admitted to transact business and issue surety bonds in the State of California, hereinafter called Surety, are held and firmly bound unto the City, as obligee, in the sum of: ONE MILLION THREE HUNDRED THRITY FOUR THOUSAND THREE HUNDRED FOUR DOLLARS ($1,334,304.00), for the payment of which sum well and truly to be made, we the Contractor and Surety bind ourselves, our heirs, executors, administrators, successors and assigns, jointly and severally. The condition of this obligation is such that, if the Contractor, Contractor's heirs, executors, administrators, successors or assigns, shall in all things stand to and abide by, and well and truly keep and fully perform all covenants, conditions and agreements required to be kept and performed by Contractor in the Contract and any changes, additions or alterations made thereto, to be kept and performed at the time and in the manner therein specified, and in all respects according to their true intent and meanings, and shall indemnify and save harmless the City, its officers, employees and agents, as therein provided, then the Surety's obligations under the Contract and this bond shall be null and void; otherwise they shall be and remain in full force and effect. This obligation shall remain in full force and effect through the end of the Contract warranty period, which will expire one year after the completion of work date specified in the Notice of Completion filed for the above-named project.

As part of the obligations secured hereby and in addition to the sum specified above, there shall be included all costs, expenses and fees, including attorney's fees, reasonably incurred by City in successfully enforcing such obligations, all to be taxed as costs and included in any judgment rendered.

The Surety, for value received, hereby stipulates and agrees that no change, extension of time, alteration or addition to the terms of the Contract or to the work to be performed thereunder or to the specifications accompanying the same shall in any way affect its obligations on this bond, and it does hereby waive notice of any such change, extension, alteration or addition.

IN WITNESS WHEREOF, this instrument has been duly executed by authorized representatives of the Contractor and Surety. SIGNED AND SEALED on March 18, 20 14.

B & M Builders, Inc.
(Contractor) (Seal)
By
Title President

Philadelphia Indemnity Insurance Company
(Surety) (Seal)
By
Title Ryan Tash, Attorney-In-Fact

ORIGINAL APPROVED AS TO FORM:

City Attorney

Form approved by CAO 7-1-12

ACKNOWLEDGMENT

State of California
County of Sacramento)

On March 18, 2014 before me, Susan Fournier, Notary Public
(insert name and title of the officer)

personally appeared Ryan Tash,
who proved to me on the basis of satisfactory evidence to be the person(s) whose name(s) is/are subscribed to the within instrument and acknowledged to me that he/she/they executed the same in his/her/their authorized capacity(ies), and that by his/her/their signature(s) on the instrument the person(s), or the entity upon behalf of which the person(s) acted, executed the instrument.

I certify under PENALTY OF PERJURY under the laws of the State of California that the foregoing paragraph is true and correct.

WITNESS my hand and official seal.

Signature _____ **(Seal)**

SUSAN FOURNIER
COMM. # 1995967
NOTARY PUBLIC-CALIFORNIA
SACRAMENTO COUNTY
MY COMM. EXP. NOV. 11, 2016

PHILADELPHIA INDEMNITY INSURANCE COMPANY
One Bala Plaza, Suite 100
Bala Cynwyd, PA 19004
Power of Attorney

KNOW ALL PERSONS BY THESE PRESENTS: that **PHILADELPHIA INDEMNITY INSURANCE COMPANY** (the Company), a corporation organized and existing under the laws of the Commonwealth of Pennsylvania, does hereby constitute and appoint: **Christine Boscacci, John T. Page, Ryan Tash & Susan Fournier of Surety Solutions Insurance Services, Inc. City of Rancho Cordova, State of California.**

Its true and lawful Attorney(s) in fact with full authority to execute on its behalf bonds, undertakings, recognizances and other contracts of indemnity and writings obligatory in the nature thereof, issued in the course of its business and to bind the Company thereby, in an amount not to exceed **$5,000,000.00**

This Power of Attorney is granted and is signed and sealed by facsimile under and by the authority of the following Resolution adopted by the Board of Directors of PHILADELPHIA INDEMNITY INSURANCE COMPANY at a meeting duly called the 1st day of July, 2011.

RESOLVED: That the Board of Directors hereby authorizes the President or any Vice President of the Company to: (1) Appoint Attorney(s) in Fact and authorize the Attorney(s) in Fact to execute on behalf of the Company bonds and undertakings, contracts of indemnity and other writings obligatory in the nature thereof and to attach the seal of the Company thereto; and (2) to remove, at any time, any such Attorney-in-Fact and revoke the authority given. And, be it

FURTHER RESOLVED: That the signatures of such officers and the seal of the Company may be affixed to any such Power of Attorney or certificate relating thereto by facsimile, and any such Power of Attorney so executed and certified by facsimile signatures and facsimile seal shall be valid and biding upon the Company in the future with the respect to any bond or undertaking to which it is attached.

IN TESTIMONY WHEREOF, PHILADELPHIA INDEMNITY INSURANCE COMPANY HAS CAUSED THIS INSTRUMENT TO BE SIGNED AND ITS CORPORATE SEALTO BE AFFIXED BY ITS AUTHORIZED OFFICE THIS 7TH DAY OF FEBRUARY 2013.

(Seal)

Robert D. O'Leary Jr., President & CEO
Philadelphia Indemnity Insurance Company

On this 7th day of February 2013, before me came the individual who executed the preceding instrument, to me personally known, and being by me duly sworn said that he is the therein described and authorized officer of the **PHILADELPHIA INDEMNITY INSURANCE COMPANY**; that the seal affixed to said instrument is the Corporate seal of said Company; that the said Corporate Seal and his signature were duly affixed.

COMMONWEALTH OF PENNSYLVANIA
NOTARIAL SEAL
DANIELLE PORATH, Notary Public
Lower Merion Twp., Montgomery County
My Commission Expires March 22, 2016

Notary Public: _____

residing at: Bala Cynwyd, PA

(Notary Seal)

My commission expires: March 22, 2016

I, Craig P. Keller, Executive Vice President, Chief Financial Officer and Secretary of PHILADELPHIA INDEMNITY INSURANCE COMPANY, do herby certify that the foregoing resolution of the Board of Directors and this Power of Attorney issued pursuant thereto are true and correct and are still in full force and effect. I do further certify that Robert D. O'Leary Jr., who executed the Power of Attorney as President, was on the date of execution of the attached Power of Attorney the duly elected President of PHILADELPHIA INDEMNITY INSURANCE COMPANY,

In Testimony Whereof I have subscribed my name and affixed the facsimile seal of each Company this 18th day of March 2014

Craig P. Keller, Executive Vice President, Chief Financial Officer & Secretary
PHILADELPHIA INDEMNITY INSURANCE COMPANY

PREMIUM IS FOR CONTRACT TERM
AND IS SUBJECT TO ADJUSTMENT
BASED ON FINAL CONTRACT AMOUNT.

CITYOF SACRAMENTO
PAYMENT BOND

Department of PUBLIC WORKS
Page 1 of 1

Bond No.: PB11511000783
Premium: Premium Included In Performance Bond
Effective Date of Bond: April 18, 2014

WHEREAS, the City of Sacramento, in the State of California, hereinafter called City, has conditionally awarded to: B&M Builders 11151 Trade Center Drive, #200, Rancho Cordova, CA 95670

hereinafter called Contractor, a contract for construction of:

West Tunnel Ramps Access Project (PN: T15029031)

Which contract is by reference incorporated herein and made a part hereof, and is hereinafter referred to as the Contract; and

WHEREAS, under the terms of the Contract and pursuant to Chapter 5 of Title 3 of Part 6 of Division 4 of the California Civil Code (commencing with Civil Code Section 9550), Contractor is required to furnish a good and sufficient payment bond to secure payment of the claims to which reference is made in Civil Code Section 9554.

NOW, THEREFORE, we the Contractor and (*here insert full name and address of Surety*):
Philadelphia Indemnity Insurance Company, 261 South Lake Ave., Ste. 360, Pasadena, CA 91101,
a corporation duly authorized and admitted to transact business and issue surety bonds in the State of California, hereinafter called Surety, are held and firmly bound unto the City, and unto all persons or entities entitled to assert a claim against a payment bond under any of the aforesaid Civil Code provisions in the sum of ONE MILLION THREE HUNDRED THRITY FOUR THOUSAND THREE HUNDRED FOUR DOLLARS ($1,334,304.00), on the condition that if Contractor shall fail to pay for any materials or equipment furnished or used in performance of the Contract, or for any work or labor thereon of any kind, or for amounts due under the Unemployment Insurance Act with respect to such work or labor, or for any amounts required to be deducted, withheld, and paid over to the Franchise Tax Board or the Employment Development Department from the wages of employees of the Contractor and all subcontractors with respect to such work or labor, then the Surety shall pay the same in an amount not exceeding the sum specified above. If suit is brought upon this bond, Surety shall pay, in addition to the above sum, all costs, expenses and fees, including attorney's fees, reasonably incurred by any party in successfully enforcing the obligation secured hereby, all to be taxed as costs and included in any judgment rendered. Should the condition of this bond be fully performed, then this obligation shall become null and void, otherwise it shall be and remain in full force and effect, and shall bind Contractor, Surety, their heirs, executors, administrators, successors and assigns, jointly and severally.

It is hereby stipulated and agreed that this bond shall inure to the benefit of all persons, companies, corporations, political subdivisions, State agencies and other entities entitled to assert a claim against a payment bond under any of the aforesaid Civil Code provisions, so as to give a right of action to them or their assigns in any suit brought upon this bond. The Surety, for value received, hereby stipulates and agrees that no change, extension of time, alteration or addition to the terms of the Contract or to the work to be performed thereunder or to the specifications accompanying the same shall in any way affect its obligations on this bond, and it does hereby waive notice of any such change, extension, alteration or addition.

IN WITNESS WHEREOF, this instrument has been duly executed by authorized representatives of the Contractor and Surety. SIGNED AND SEALED on March 18, 20 14.

B & M Builders, Inc.
(Contractor) (Seal)
By
Title President

Philadelphia Indemnity Insurance Company
(Surety) (Seal)
By
Title Ryan Tash, Attorney-In-Fact

ORIGINAL APPROVED AS TO FORM:

City Attorney

Effective 7-1-12

ACKNOWLEDGMENT

State of California
County of Sacramento)

On March 18, 2014 before me, Susan Fournier, Notary Public
(insert name and title of the officer)

personally appeared Ryan Tash,
who proved to me on the basis of satisfactory evidence to be the person(s) whose name(s) is/are subscribed to the within instrument and acknowledged to me that he/she/they executed the same in his/her/their authorized capacity(ies), and that by his/her/their signature(s) on the instrument the person(s), or the entity upon behalf of which the person(s) acted, executed the instrument.

I certify under PENALTY OF PERJURY under the laws of the State of California that the foregoing paragraph is true and correct.

WITNESS my hand and official seal.

Signature _____ **(Seal)**

SUSAN FOURNIER
COMM. # 1995967
NOTARY PUBLIC - CALIFORNIA
SACRAMENTO COUNTY
MY COMM. EXP. NOV. 11, 2016

1746

PHILADELPHIA INDEMNITY INSURANCE COMPANY
One Bala Plaza, Suite 100
Bala Cynwyd, PA 19004
Power of Attorney

KNOW ALL PERSONS BY THESE PRESENTS: that **PHILADELPHIA INDEMNITY INSURANCE COMPANY** (the Company), a corporation organized and existing under the laws of the Commonwealth of Pennsylvania, does hereby constitute and appoint: **Christine Boscacci, John T. Page, Ryan Tash & Susan Fournier of Surety Solutions Insurance Services, Inc. City of Rancho Cordova, State of California.**

Its true and lawful Attorney(s) in fact with full authority to execute on its behalf bonds, undertakings, recognizances and other contracts of indemnity and writings obligatory in the nature thereof, issued in the course of its business and to bind the Company thereby, in an amount not to exceed **$5,000,000.00**

This Power of Attorney is granted and is signed and sealed by facsimile under and by the authority of the following Resolution adopted by the Board of Directors of PHILADELPHIA INDEMNITY INSURANCE COMPANY at a meeting duly called the 1st day of July, 2011.

RESOLVED: That the Board of Directors hereby authorizes the President or any Vice President of the Company to: (1) Appoint Attorney(s) in Fact and authorize the Attorney(s) in Fact to execute on behalf of the Company bonds and undertakings, contracts of indemnity and other writings obligatory in the nature thereof and to attach the seal of the Company thereto; and (2) to remove, at any time, any such Attorney-in-Fact and revoke the authority given. And, be it

FURTHER RESOLVED: That the signatures of such officers and the seal of the Company may be affixed to any such Power of Attorney or certificate relating thereto by facsimile, and any such Power of Attorney so executed and certified by facsimile signatures and facsimile seal shall be valid and biding upon the Company in the future with the respect to any bond or undertaking to which it is attached.

IN TESTIMONY WHEREOF, PHILADELPHIA INDEMNITY INSURANCE COMPANY HAS CAUSED THIS INSTRUMENT TO BE SIGNED AND ITS CORPORATE SEALTO BE AFFIXED BY ITS AUTHORIZED OFFICE THIS 7TH DAY OF FEBRUARY 2013.

(Seal)

Robert D. O'Leary Jr., President & CEO
Philadelphia Indemnity Insurance Company

On this 7th day of February 2013, before me came the individual who executed the preceding instrument, to me personally known, and being by me duly sworn said that he is the therein described and authorized officer of the **PHILADELPHIA INDEMNITY INSURANCE COMPANY**; that the seal affixed to said instrument is the Corporate seal of said Company; that the said Corporate Seal and his signature were duly affixed.

COMMONWEALTH OF PENNSYLVANIA
NOTARIAL SEAL
DANIELLE PORATH, Notary Public
Lower Merion Twp., Montgomery County
My Commission Expires March 22, 2016

Notary Public: _____

residing at: Bala Cynwyd, PA

(Notary Seal)

My commission expires: March 22, 2016

I, Craig P. Keller, Executive Vice President, Chief Financial Officer and Secretary of PHILADELPHIA INDEMNITY INSURANCE COMPANY, do herby certify that the foregoing resolution of the Board of Directors and this Power of Attorney issued pursuant thereto are true and correct and are still in full force and effect. I do further certify that Robert D. O'Leary Jr., who executed the Power of Attorney as President, was on the date of execution of the attached Power of Attorney the duly elected President of PHILADELPHIA INDEMNITY INSURANCE COMPANY,

In Testimony Whereof I have subscribed my name and affixed the facsimile seal of each Company this 18th day of March 20 14

Craig P. Keller, Executive Vice President, Chief Financial Officer & Secretary
PHILADELPHIA INDEMNITY INSURANCE COMPANY

GUARANTEE

We hereby guarantee the West Tunnel Ramps Access (PN: T15029031) the City of Sacramento for one (1) year in accordance with the guarantee required in the specifications. We agree to repair or replace any or all such work, together with all or any other work which may be displaced in so doing, that may be proven defective in workmanship or material within the one-year period from the date of acceptance without any expense whatsoever to the City, ordinary wear and tear and unusual abuse or neglect excepted.

In the event of our failure to comply with the above-mentioned conditions within five (5) days time after being notified in writing, we collectively or separately, do hereby authorize the City to proceed to have the defects repaired and made good at our expense and will pay the costs and damages, including but not limited to any related attorney fees and City staff and administrative expenses, therefor immediately upon demand.

Dated: 3/6/14

Signed: [signature]

Patrick Mullen
Printed Name

B+M Builders, Inc.
Company

11151 Trade Center Dr. #200
Address

Rancho Cordova, Ca. 95670

(Rev. 5-6-91)

WORKER'S COMPENSATION CERTIFICATION

In accordance with Article 5 (commencing at Section 1860), Chapter 1, Part 7, Division 2 of the Labor Code, the below certificate must be signed and filed with the awarding body prior to performing any work under this contract. Labor Code Section 3700, inter alia, states the following:

"Every employer shall secure the payment of compensation in one or more of the following ways:

"(a) By being insured against liability to pay compensation in one or more insurers duly authorized to write compensation insurance in this State.

"(b) By securing from the Director of Industrial Relations a certificate of consent to self-insure, which may be given upon furnishing proof satisfactory to the Director of Industrial Relations of ability to self-insure and to pay any compensation that may become due to his employees.

To be signed by authorized corporate officer or partner or individual submitting the Proposal. If Bidder is: (example)

1. An individual using a firm name, sign: "John Doe, an individual doing business as Blank Company."
2. An individual doing business under his own name, Sign: your name only.
3. A co-partnership, sign: "John Doe and Richard Doe, co-partners doing business as Blank Company, by, John Doe, co-partner.
4. A corporation, sign: "Blank Company, by John Doe, Secretary." (or other title)

I am aware of the provisions of Section 3700 of the Labor Code which require every employer to be insured against liability for worker's compensation or to undertake self-insurance in accordance with the provisions of that code, and I will comply with such provisions before commencing the performance of the work of this contract.

DATE: 3/6/14

Contractor B+M Builders, Inc.

By _____
Signature

YEAR **2012**

Withholding Exemption Certificate

(This form can only be used to certify exemption from nonresident withholding under California Revenue and Taxation Code (R&TC) Section 18662. Do not use this form for exemption from wage withholding.)

CALIFORNIA FORM **590**

File this form with your withholding agent. (Please type or print)

Withholding agent's name

Payee's name: B & M Builders, Inc.

Payee's ☐ SOS file no. ☐ SSN or ITIN ☐ CA corp. no. ☑ FEIN: 51-0539817

Address (number and street, PO Box, or PMB no.): 11151 Trade Center Drive

Apt. no./ Ste. no.: 200

City: Rancho Cordova

State: Ca

ZIP Code: 95670

Read the following carefully and check the box that applies to the payee.

I certify that for the reasons checked below, the payee named on this form is exempt from the California income tax withholding requirement on payment(s) made to the entity or individual.

☐ **Individuals — Certification of Residency:**
I am a resident of California and I reside at the address shown above. If I become a nonresident at any time, I will promptly notify the withholding agent. See instructions for General Information D, Who is a Resident, for the definition of a resident.

☑ **Corporations:**
The above-named corporation has a permanent place of business in California at the address shown above or is qualified through the California Secretary of State (SOS) to do business in California. The corporation will file a California tax return and withhold on payments of California source income to nonresidents when required. If this corporation ceases to have a permanent place of business in California or ceases to do any of the above, I will promptly notify the withholding agent. See instructions for General Information F, What is a Permanent Place of Business, for the definition of permanent place of business.

☐ **Partnerships or limited liability companies (LLC):**
The above-named partnership or LLC has a permanent place of business in California at the address shown above or is registered with the California SOS, and is subject to the laws of California. The partnership or LLC will file a California tax return and will withhold on foreign and domestic nonresident partners or members when required. If the partnership or LLC ceases to do any of the above, I will promptly inform the withholding agent. For withholding purposes, a limited liability partnership (LLP) is treated like any other partnership.

☐ **Tax-Exempt Entities:**
The above-named entity is exempt from tax under California Revenue and Taxation Code (R&TC) Section 23701 _____ (insert letter) or Internal Revenue Code Section 501(c) _____ (insert number). The tax-exempt entity will withhold on payments of California source income to nonresidents when required. If this entity ceases to be exempt from tax, I will promptly notify the withholding agent. Individuals cannot be tax-exempt entities.

☐ **Insurance Companies, Individual Retirement Arrangements (IRAs), or Qualified Pension/Profit Sharing Plans:**
The above-named entity is an insurance company, IRA, or a federally qualified pension or profit-sharing plan.

☐ **California Trusts:**
At least one trustee and one noncontingent beneficiary of the above-named trust is a California resident. The trust will file a California fiduciary tax return and will withhold on foreign and domestic nonresident beneficiaries when required. If the trustee becomes a nonresident at any time, I will promptly notify the withholding agent.

☐ **Estates — Certification of Residency of Deceased Person:**
I am the executor of the above-named person's estate. The decedent was a California resident at the time of death. The estate will file a California fiduciary tax return and will withhold on foreign and domestic nonresident beneficiaries when required.

☐ **Nonmilitary Spouse of a Military Servicemember:**
I am a nonmilitary spouse of a military servicemember and I meet the Military Spouse Residency Relief Act (MSRRA) requirements. See instructions for General Information E, MSRRA.

CERTIFICATE: Please complete and sign below.

Under penalties of perjury, I hereby certify that the information provided in this document is, to the best of my knowledge, true and correct. If conditions change, I will promptly notify the withholding agent.

Payee's name and title (type or print): Patrick Mullen Daytime telephone no. 916 862 0095

Payee's signature ▶ _____ Date 3/6/14

For Privacy Notice, get form FTB 1131.

7061123

Form **W-9**
(Rev. December 2011)
Department of the Treasury
Internal Revenue Service

Request for Taxpayer Identification Number and Certification

Give Form to the requester. Do not send to the IRS.

Print or type
See Specific Instructions on page 2.

Name (as shown on your income tax return)
B & M Builders, Inc

Business name/disregarded entity name, if different from above

Check appropriate box for federal tax classification:
☐ Individual/sole proprietor ☐ C Corporation ☑ S Corporation ☐ Partnership ☐ Trust/estate

☐ Limited liability company. Enter the tax classification (C=C corporation, S=S corporation, P=partnership) ▶

☐ Other (see instructions) ▶

☐ Exempt payee

Address (number, street, and apt. or suite no.)
11151 Trade Center Drive #200

Requester's name and address (optional)
City of Sacramento

City, state, and ZIP code
Rancho Cordova, Ca 95670

List account number(s) here (optional)

Part I Taxpayer Identification Number (TIN)

Enter your TIN in the appropriate box. The TIN provided must match the name given on the "Name" line to avoid backup withholding. For individuals, this is your social security number (SSN). However, for a resident alien, sole proprietor, or disregarded entity, see the Part I instructions on page 3. For other entities, it is your employer identification number (EIN). If you do not have a number, see *How to get a TIN* on page 3.

Note. If the account is in more than one name, see the chart on page 4 for guidelines on whose number to enter.

Social security number
☐☐☐ - ☐☐ - ☐☐☐☐

Employer identification number
5 1 - 0 5 3 9 8 1 7

Part II Certification

Under penalties of perjury, I certify that:

1. The number shown on this form is my correct taxpayer identification number (or I am waiting for a number to be issued to me), and
2. I am not subject to backup withholding because: (a) I am exempt from backup withholding, or (b) I have not been notified by the Internal Revenue Service (IRS) that I am subject to backup withholding as a result of a failure to report all interest or dividends, or (c) the IRS has notified me that I am no longer subject to backup withholding, and
3. I am a U.S. citizen or other U.S. person (defined below).

Certification instructions. You must cross out item 2 above if you have been notified by the IRS that you are currently subject to backup withholding because you have failed to report all interest and dividends on your tax return. For real estate transactions, item 2 does not apply. For mortgage interest paid, acquisition or abandonment of secured property, cancellation of debt, contributions to an individual retirement arrangement (IRA), and generally, payments other than interest and dividends, you are not required to sign the certification, but you must provide your correct TIN. See the instructions on page 4.

Sign Here **Signature of U.S. person ▶** **Date ▶** 3/6/14

General Instructions

Section references are to the Internal Revenue Code unless otherwise noted.

Purpose of Form

A person who is required to file an information return with the IRS must obtain your correct taxpayer identification number (TIN) to report, for example, income paid to you, real estate transactions, mortgage interest you paid, acquisition or abandonment of secured property, cancellation of debt, or contributions you made to an IRA.

Use Form W-9 only if you are a U.S. person (including a resident alien), to provide your correct TIN to the person requesting it (the requester) and, when applicable, to:

1. Certify that the TIN you are giving is correct (or you are waiting for a number to be issued),

2. Certify that you are not subject to backup withholding, or

3. Claim exemption from backup withholding if you are a U.S. exempt payee. If applicable, you are also certifying that as a U.S. person, your allocable share of any partnership income from a U.S. trade or business is not subject to the withholding tax on foreign partners' share of effectively connected income.

Note. If a requester gives you a form other than Form W-9 to request your TIN, you must use the requester's form if it is substantially similar to this Form W-9.

Definition of a U.S. person. For federal tax purposes, you are considered a U.S. person if you are:

- An individual who is a U.S. citizen or U.S. resident alien,
- A partnership, corporation, company, or association created or organized in the United States or under the laws of the United States,
- An estate (other than a foreign estate), or
- A domestic trust (as defined in Regulations section 301.7701-7).

Special rules for partnerships. Partnerships that conduct a trade or business in the United States are generally required to pay a withholding tax on any foreign partners' share of income from such business. Further, in certain cases where a Form W-9 has not been received, a partnership is required to presume that a partner is a foreign person, and pay the withholding tax. Therefore, if you are a U.S. person that is a partner in a partnership conducting a trade or business in the United States, provide Form W-9 to the partnership to establish your U.S. status and avoid withholding on your share of partnership income.

C&D Debris Waste Management Plan

C&D Debris Waste Management Plan
City of Sacramento Solid Waste Services
2812 Meadowview Road, Building 1
Sacramento, CA 95832
Phone: (916) 808-4839 / Fax: (916) 808-4999
C&D@cityofsacramento.org

Form submitted by:	
	Please attach a business card, or put your name with a phone number and/or an email address.

This Waste Management Plan (WMP) must be submitted and approved before work can begin. Only one WMP is required for each public construction project. The administration fee and, if applicable, a security deposit must be submitted with this form to be approved. Administration fee is 0.04% of project bid amount (min $40, max $800); security deposit, if applicable, is 1% of bid amount (max $10,000). The accompanying Waste Log must be submitted within 30 days of the project completion report, or a penalty may be imposed.

A. Building Project Information:

Job Address: _____
Contractor: _____
Address: _____

Engineering Estimate: _____
Phone: _____
Email: _____

B. Briefly describe the project:

_____
_____
_____
_____
_____

C. Materials Required to be Recycled

50% of all debris must be recycled if generated during the course of your project. You can either **source-separate** them, which may be hauled by anyone, or mix them in one container and send the **mixed C&D debris** load to a **Certified Mixed C&D Sorting Facility**. Mixed C&D loads can only be hauled by a franchised hauler or self-hauled. Please see the Definitions section, on the next page, for more information.

50%
of all debris must be recycled

D. Material Management.

1. **How will C&D debris will be stored on the project site:** _____ Mixed C&D _____ Source-Separated
2. **Company to haul away debris:** _____
3. **Facilities to receive debris:** _____

C&D Debris Waste Management Plan

C&D Debris Waste Management Plan
City of Sacramento Solid Waste Services
2812 Meadowview Road, Building 1
Sacramento, CA 95832
Phone: (916) 808-4839 / Fax: (916) 808-4999
C&D@cityofsacramento.org

E. Definitions.

Please read and understand these terms. Call Solid Waste at (916) 808-4833 if these terms are not clear to you. More information is also available online at http://www.cityofsacramento.org/utilities/.

1. **Self-haul or self-hauling**: This is when the general contractor or a subcontractor *who is doing work on the project* hauls their own waste materials for recycling or disposal. Note that a *jobsite cleanup crew is not doing other work on the project and is not self-hauling*. Jobsite cleanup crews need to be franchised in order to haul mixed C&D debris away.
2. **Franchised hauler**: Check the Department of Utilities (DOU) website for a list of these haulers. Only these companies and the City of Sacramento can collect and haul mixed C&D debris generated within the City for a fee.
3. **Source separation**: This means keeping wood, metal, cardboard, or other recyclables in separate containers, and sending the materials to an authorized recycler. A list of authorized recyclers can be found on the DOU web site. Source-separated materials may be hauled by anyone.
4. **Mixed C&D debris**: This means putting all recyclable debris into one container. Mixed materials must be sent to a certified mixed C&D sorting facility. Mixed materials may be either self-hauled or hauled by a franchised hauler. If your job site is crowded, this option saves the most space.
5. **Certified Mixed C&D Sorting Facility**: See the DOU web site for a list. These facilities have been certified by the Sacramento Regional Solid Waste Authority (SWA) to extract recyclable materials from mixed C&D debris.

F. Terms and Conditions

- Your approved Waste Management Plan and Waste Log must be kept on the job site for the duration of the project.
- City of Sacramento Solid Waste Services staff may enter the jobsite to inspect waste collection areas.
- **ALL** Clean Wood Waste (unpainted, untreated lumber, plywood and OSB), Inert Materials (concrete, asphalt paving, brick, block, and dirt), Wooden Pallets, Scrap Metal, and Corrugated Cardboard must be recycled.
- Only SWA-Certified Mixed C&D Sorting Facilities may be used to recycle these materials if mixed with other materials.
- Only the City of Sacramento, SWA-Franchised Haulers, or self-haulers (as defined above) may collect and transport mixed C&D material from the jobsite.
- C&D Debris may not be burned or dumped illegally.
- Your Waste Log must be completed and submitted, with supporting weight tickets, within 30 days of submitting your project completion report. All waste hauling and disposal or recycling activity must be entered on the Waste Log, including information from any subcontractors who self-hauled their own debris off-site.
- You must keep all receipts or weight-tickets from your project for a period of one year from the submittal of your waste log.
- Failure to comply with these terms and conditions may result in a fine and payment of a security deposit on future projects.

C&D Debris Haulers & Facilities

C&D Debris Waste Management Plan
City of Sacramento Solid Waste Services
2812 Meadowview Road, Building 1
Sacramento, CA 95832
Phone: (916) 808-4833 / Fax: (916) 808-4999
C&D@cityofsacramento.org

Certified Mixed C&D Facilities

Allied Waste / Elder Creek Transfer and Recovery	(916) 387-8425
Florin-Perkins Public Disposal	(916) 443-5120
L&D Landfill	(916) 737-8640
Waste Management / K&M Recycle America	(916) 452-0142

Franchised Haulers

ACES Waste Services, Inc.	(866) 488-8837	Elk Grove Waste Management, LLC	(916) 689-4052
Allied Waste Services	(916) 631-0600	Mini Drops, Inc.	(916) 686-8785
All Waste Systems, Inc.	(916) 456-1555	Norcal Waste Services of Sacramento	(916) 381-5300
Atlas Disposal Industries, LLC	(916) 455-2800	North West Recyclers	(916) 686-8575
California Waste Recovery Systems	(916) 441-1985	Waste Management of Sacramento	(916) 387-1400
Central Valley Waste Services, Inc.	(209) 369-8274	Waste Removal & Recycling	(916) 453-1400
City of Sacramento Solid Waste	(916) 808-4839	Western Strategic Materials, Inc.	(916) 388-1076

Recyclers*

Bell Marine	(916) 442-9089
C & C Paper Recycling	(916) 920-2673
EBI Aggregates	(916) 372-7580
International Paper	(916) 371-4634
Modern Waste Solutions	(916) 447-6800
PRIDE Industries, Inc.	(916) 640-1300
Recycling Industries, Inc.	(916) 452-3961
Sacramento Local Conservation Corps	(916) 386-8394
Smurfit-Stone Container Corporation	(916) 381-3340
Southside Art Center	(916) 387-8080
Spencer Building Maintenance, Inc.	(916) 922-1900

Recovery Stations & Landfills

Elder Creek Recovery & Transfer Station	(916) 387-8425
Kiefer Landfill	(916) 875-5555
L & D Landfill	(916) 383-9420
North Area Recovery Station	(916) 875-5555
Sacramento Recycling & Transfer Station	(916) 379-0500
Waste Management Recycle America	(916) 452-0142

More updated information can be found online at:
http://www.cityofsacramento.org/utilities/

* Please note that any facility may receive source-separated recyclable materials as long as it is authorized to do so by the State of California. This is not meant to be a complete list.

C&D Debris Waste Log

C&D Debris Waste Management Plan
City of Sacramento Solid Waste Services
2812 Meadowview Road, Building 1
Sacramento, CA 95832
Phone: (916) 808-4839 / Fax: (916) 808-4999
C&D@cityofsacramento.org

Project address: _____

This waste log, and copies of supporting weight tickets, must be submitted to Solid Waste within 30 days of submitting the project completion report. The waste log and weight tickets must also be kept on file for one year after project completion.

Date	Hauler	Material	Destination	Amount

Hauler: Indicate the Franchisee, Self-Hauler, City of Sacramento, or other hauler who removed the material offsite.
Material: Indicate appropriate category: Scrap Metal, Inert Materials, Cardboard, Wooden Pallets, or Clean Wood Waste.
Destination: Indicate the facility that received the material for disposal or recycling
Amount: Indicate the weight. If weight is not known, put volume.

DEPARTMENT OF TRANSPORTATION

ENGINEERING SERVICES DIVISION
915 I Street, Room 2000
Sacramento, CA 95814

PAY REQUEST APPLICATION

(All information to be entered on Schedule of Values page.)

PROJECT NAME:	**WEST TUNNEL ACCESS RAMPS PROJECT**		
CONTRACTOR: *(per agreement)*			
REMITTANCE ADDRESS:			
PHONE NUMBER: ( )			
INVOICE NO.:	**T15029031-**	CITY PROJECT NUMBER:	**T15029031**
		PERIOD ENDING DATE:	

ORIGINAL CONTRACT AMOUNT:		
CHANGE ORDER NO. 1		
CHANGE ORDER NO. 2		
CHANGE ORDER NO. 3		
CHANGE ORDER NO. 4		
CHANGE ORDER NO. 5		
CHANGE ORDER NO. 6		
CHANGE ORDER NO. 7		
CHANGE ORDER NO. 8		
CHANGE ORDER NO. 9		
TOTAL CHANGE ORDERS:		
CONTRACT AMOUNT TO DATE:		
TOTAL WORK COMPLETED TO DATE:		
RETENTION WITHHELD:		
LESS PREVIOUS PAYMENTS:		
AMOUNT DUE THIS INVOICE:		
TOTAL COMPLETED LESS RETENTION:		

DEPARTMENT OF TRANSPORTATION

ENGINEERING SERVICES DIVISION
915 I Street, Room 2000
Sacramento, CA 95814

PAY REQUEST APPLICATION

(All information to be entered on Schedule of Values page.)

If the project is CDBG funded, or the prime contractor is a certified UDBE or ESBE, please check the applicable box & you do not need to fill out the section below.

☐ UDBE Prime Contractor ☐ ESBE Prime Contractor ☐ CDBG Funded

List all **ESBE/UDBE** subcontractors employed on this project during this period ending date and indicate committed amounts to be paid to the sub contractors. Please also include ESBE/UDBE materials suppliers and trucking firms. Keep records of payments made, as you will be asked to furnish these at contract completion. The Pay Request Application will be considered incomplete unless this information is provided along with all other required documentation to support the request for payment. Attach additional sheets if necessary.

Circle UDBE for FEDERALLY funded projects.

Circle ESBE for LOCALLY funded projects.

Original amount pledged:	
Pledge Increase/Decrease to Include Change Order(s):	
Total amount pledged:	

ESBE / UDBE Sub-Contractor	Previous Total (A)	Current Pay Request Total (B)	Total ESBE / UDBE Work (A+B)	Percentage Attained (A+B)/Amount Pledged
		Totals:		

Labor compliance (payrolls, etc.) is current and submitted for this Pay Request

Approved
By (Prime Contractor) _____ Date: _____
PRINT AND SIGN

Submit To:

Department of Transportation
915 "I" Street, Room 2000
Sacramento, CA 95814
Attn: CONSTRUCTION INSPECTOR

Approved
By (Resident Const. Inspector) _____ Date: _____
PRINT AND SIGN

Certified by Project Manager
By (Project Manager) _____ Date: _____
PRINT AND SIGN

Approved
By (Labor Compliance) _____ Date: _____
PRINT AND SIGN

In accordance with Public Contract Code Sec. 20104.50 the City shall pay the Contractor interest on any progress payment which is made by City more than 30 days after City receives an undisputed and properly submitted written payment request. Said interest shall be equal to the rate set forth in CCP Sec.685.010(a), and shall begin to accrue upon the expiration of said 30 day period. Any written request for a progress payment which City determines to be disputed, improper or not suitable for payment for any reason shall be returned to Contractor within 7 days after receipt by City, along with a written statement of the reason or reasons why such request is disputed, improper or not suitable for payment.

Contractor Entered Data
Construction Inspector's Name.
PM certifies that all information is correct.

SCHEDULE OF VALUES

DEPARTMENT OF TRANSPORTATION
ENGINEERING SERVICES DIVISION
915 I Street, Room 2000

PROJECT NAME: WEST TUNNEL ACCESS RAMPS PROJECT
CITY PROJECT NUMBER: T15029031
CONTRACTOR: (As per City Agreement)
REMITTANCE ADDRESS:
PHONE NUMBER: ( )
INVOICE NUMBER: T15029031-

Remit To:
Department of Transportation
Engineering Services Division
915 "I" Street, Room 2000
Sacramento, CA 95814

Payment No.
Work Performed Thru
Days Expended on Contract

Item No	Item Description	Original Contract Quantity	Unit	Unit Price	Original Contract Amount	Previous Work Completed (SHOULD MATCH PREVIOUS PAY REQUEST'S TOTAL WORK COMPLETED COLUMNS)		This Estimate		Total Work Completed		Balance of Contract	
						Quantity	Amount	Quantity	Amount	Quantity	Amount	Quantity	Amount
1	Preconstruction Photographs	1	LS									1.00	
2	Prepare Storm Water Pollution Prevention Plan	1	LS									1.00	
3	Storm Water Annual Report	1	LS									1.00	
4	Construction Site Management	1	LS									1.00	
5	Traffic Control Systems	1	LS									1.00	
6	Clearing and Grubbing	1	LS									1.00	
7	Bollard to Remove	42	EA									42.00	
8	Traffic Stripe and Pavement Markings to Remove	1	LS									1.00	
9	Pavement Markers to Remove	1	LS									1.00	
10	Pedestrian Boardwalk to Remove	325	SF									325.00	
11	Concrete Curb, Gutter and Sidewalk to Remove	390	SF									390.00	
12	Concrete Curb to Remove	110	LF									110.00	
13	Concrete Valley Gutter to Remove	1,650	SF									1,650.00	
14	Concrete Island to Remove	2,670	SF									2,670.00	
15	Concrete Tunnel Headwall and Wingwalls to Remove	65	SF									65.00	
16	Existing Fence to Remove	500	LF									500.00	
17	Existing Gate to Remove	1	EA									1.00	
18	Storm Drain Inlet to Remove	2	EA									2.00	
19	Parking Booth to Remove	1	EA									1.00	
20	Pay Station Shelter to Relocate	1	EA									1.00	
21	Purple Martin Pole to Relocate	3	EA									3.00	
22	Storm Drain Pipe to Abandon	38	LF									38.00	
23	Roadway Excavation and Grading	3,160	CY									3,160.00	
24	Aggregate Base Class 2 to Place	1,460	CY									1,460.00	
25	Curb and Gutter Type 1 to Construct	9	LF									9.00	
26	Curb and Gutter Type 2 to Construct	100	LF									100.00	

Template: Pay_Request 2 V4 7-5-11.xlsx

Item No	Item Description	Original Contract Quantity	Unit	Unit Price	Original Contract Amount	Previous Work Completed (SHOULD MATCH PREVIOUS PAY REQUEST'S TOTAL WORK COMPLETED COLUMNS)		This Estimate		Total Work Completed		Balance of Contract	
						Quantity	Amount	Quantity	Amount	Quantity	Amount	Quantity	Amount
27	Curb Type 3 to Construct	830	LF									830.00	
28	Curb Type 3 (Modified) To Construct	120	LF									120.00	
29	Wheel Stop to Install	77	EA									77.00	
30	PCC Edge Wall to Install	550	LF									550.00	
31	Concrete Stairway to Construct	30	SF									30.00	
32	Minor Concrete (Valley Gutter) to Construct	305	LF									305.00	
33	Concrete Island to Construct	440	SF									440.00	
34	4" PCC Sidewalk to Construct	11,900	SF									11,900.00	
35	4" Colored PCC Sidewalk to Construct	1,850	SF									1,850.00	
36	PCC Pedestrian Walkway to Construct	5,100	SF									5,100.00	
37	Truncated Domes on New Ramps (36" x 48")	21	EA									21.00	
38	Truncated Domes on New Ramps (36" x 60")	1	EA									1.00	
39	Chain Link Fence to Install	50	LF									50.00	
40	Railroad Track to Install	460	LF									460.00	
41	Pedestrian Railing To Install	15	LF									15.00	
42	Picket Fence to Install	630	LF									630.00	
43	Pedestrian Barricade to Install	1	EA									1.00	
44	Bollards to Install	8	EA									8.00	
45	Gutter Drain No.20 to Construct	4	EA									4.00	
46	Gutter Drain No.20 (Modified) to Construct	2	EA									2.00	
47	3" PVC Storm Drain Pipe to Install	60	LF									60.00	
48	12" Storm Drain Pipe to Install	240	LF									240.00	
49	Slurry Seal Type 2 to Place	5,700	SY									5,700.00	
50	Cold Plane AC Pavement (0.17" Max)	340	SY									340.00	
51	Hot Mix Asphalt (3/4") Pavement to Place	970	TON									970.00	
52	Hot Mix Asphalt (1/2") Pavement to Place	430	TON									430.00	
53	Roadside Sign to Remove	13	EA									13.00	
54	Roadside Sign to Relocate	1	EA									1.00	
55	Roadside Sign to Place	22	EA									22.00	
56	Thermoplastic Traffic Stripe to Place	110	LF									110.00	
57	Thermoplastic Pavement Marking to Place	3,000	SF									3,000.00	
58	Pavement Marker to Place	202	EA									202.00	
59	Painted Pavement Stripe to Place	6,600	LF									6,600.00	
60	Painted Stall Markings to Place	1	LS									1.00	

Item No	Item Description	Original Contract Quantity	Unit	Unit Price	Original Contract Amount	Previous Work Completed (SHOULD MATCH PREVIOUS PAY REQUEST'S TOTAL WORK COMPLETED COLUMNS)		This Estimate		Total Work Completed		Balance of Contract	
						Quantity	Amount	Quantity	Amount	Quantity	Amount	Quantity	Amount
61	Audio Bird Control Device to Install	1	LS									1.00	
62	Automatic Irrigation System to Install	1	LS									1.00	
63	Soil Preparation and Finish Grading	1	LS									1.00	
64	Shrubs to Plant	1	LS									1.00	
65	Landscape Maintenance	1	LS									1.00	
66	Parking Lot Lighting Installation	1	LS									1.00	
67	Permeable Interlocking Pavers	13,900	SF									13,900.00	
68	Mobilization (5%)	1	LS									1.00	
		Original Contract Total:											
	Change Order #1 - See change order summary sheet for details												
	Change Order #2 - See change order summary sheet for details												
	Change Order #3 - See change order summary sheet for details												
	Change Order #4 - See change order summary sheet for details												
	Change Order #5 - See change order summary sheet for details												
	Change Order #6 - See change order summary sheet for details												
	Change Order #7 - See change order summary sheet for details												
	Change Order #8 - See change order summary sheet for details												
	Change Order #9 - See change order summary sheet for details												

Sum of all Change Orders	$0.00	"Total Work to Date" From Previous Pay Request		This Estimate (current work)		Total Work to Date		Balancing Total of Adjusted Contract	$0.00
CCO Adjusted Contract Amount (Original + Change Orders)	$0.00	Retention Withheld From Previous Pay Request		This Retention (current work) (5%)		Retention Withheld to Date			
Partial Retention Release (Prior approval is needed before proceeding with partial rention release)		"Retention Released to Date" From Previous Pay Request		Current Retention Release		Retention Released to Date			
		"Total Paid To Date" from Previous Pay Request		This Payment		Total Paid to Date		Supervisor Approval (Print & Sign)	

Contractor Entered Data

PM Entered Data

250

Template: Pay_Request 2 V4 7-5-11.xlsx

NOTICE TO PROCEED

DATE

ABC Construction
Attn: John Construction
123 ABC Street
Sacramento, CA 95814

RE: PROJECT NAME (PN:)

Notice is hereby given you are authorized to commence work on the above referenced project on _____. You are legally required to begin work within fifteen (15) working days of this date. The entire work on the project must be completed within ____ **(__) working days** from the date of this notice. Forty eight (48) hours prior to starting work, please notify the Project Manager_____ , **808-____**. Please address all correspondence to:

Engineering Services Division
915 I Street, Room 2000
Sacramento, CA 95814
(916) 808-8300/ (916) _____
(916) 808-7903 FAX
Attn: _____

Please reference City Project No. _____ in all billing and correspondence. We look forward to a mutually successful project. The City of Sacramento is committed to the "Partnering Concept" of open communication and cooperative construction. In that spirit, please do not hesitate to contact us via phone at (916) 808-8195 or FAX at (916) 808-8281 if we can be of any assistance.

Respectfully,

_____
Jose R. Ledesma
Contract Services

Receipt Acknowledged,_____

_____
Signature Date

_____
Title

cc:
Tim Mar
Risk Management
Shareen Kidd
Project File

B&MBU-1 OP ID: KM

ACORD CERTIFICATE OF LIABILITY INSURANCE

DATE (MM/DD/YYYY) 03/07/2014

THIS CERTIFICATE IS ISSUED AS A MATTER OF INFORMATION ONLY AND CONFERS NO RIGHTS UPON THE CERTIFICATE HOLDER. THIS CERTIFICATE DOES NOT AFFIRMATIVELY OR NEGATIVELY AMEND, EXTEND OR ALTER THE COVERAGE AFFORDED BY THE POLICIES BELOW. THIS CERTIFICATE OF INSURANCE DOES NOT CONSTITUTE A CONTRACT BETWEEN THE ISSUING INSURER(S), AUTHORIZED REPRESENTATIVE OR PRODUCER, AND THE CERTIFICATE HOLDER.

IMPORTANT: If the certificate holder is an ADDITIONAL INSURED, the policy(ies) must be endorsed. If SUBROGATION IS WAIVED, subject to the terms and conditions of the policy, certain policies may require an endorsement. A statement on this certificate does not confer rights to the certificate holder in lieu of such endorsement(s).

PRODUCER
Excel Bonds & Ins. Serv., Inc.
License #0B53997
3620 American River Drive #125
Sacramento, CA 95864
Excel Bonds & Ins. Serv., Inc

CONTACT NAME: Excel Bonds & Ins. Serv., Inc
PHONE (A/C, No, Ext): 916-971-8844 FAX (A/C, No): 916-971-8840
E-MAIL ADDRESS: karen@excelbondsinsurance.com

INSURER(S) AFFORDING COVERAGE	NAIC #
INSURER A: Navigators Specialty Ins. Co.	36056
INSURER B: Golden Eagle Insurance Company	10836
INSURER C: RSUI Indemnity Co.	22314
INSURER D: State Compensation Ins Fund	
INSURER E: Homeland Insurance Co. of	33452
INSURER F:	

INSURED
B & M Builders, Inc.
11151 Trade Center Dr Ste 200
Rancho Cordova, CA 95670

COVERAGES CERTIFICATE NUMBER: REVISION NUMBER:

THIS IS TO CERTIFY THAT THE POLICIES OF INSURANCE LISTED BELOW HAVE BEEN ISSUED TO THE INSURED NAMED ABOVE FOR THE POLICY PERIOD INDICATED. NOTWITHSTANDING ANY REQUIREMENT, TERM OR CONDITION OF ANY CONTRACT OR OTHER DOCUMENT WITH RESPECT TO WHICH THIS CERTIFICATE MAY BE ISSUED OR MAY PERTAIN, THE INSURANCE AFFORDED BY THE POLICIES DESCRIBED HEREIN IS SUBJECT TO ALL THE TERMS, EXCLUSIONS AND CONDITIONS OF SUCH POLICIES. LIMITS SHOWN MAY HAVE BEEN REDUCED BY PAID CLAIMS.

INSR LTR	TYPE OF INSURANCE	ADDL INSR	SUBR WVD	POLICY NUMBER	POLICY EFF (MM/DD/YYYY)	POLICY EXP (MM/DD/YYYY)	LIMITS	
A	GENERAL LIABILITY X COMMERCIAL GENERAL LIABILITY CLAIMS-MADE X OCCUR X Owner/Cont Prot. GEN'L AGGREGATE LIMIT APPLIES PER: POLICY X PRO-JECT LOC	X	X	LA13CGL019451-00	08/16/2013	08/16/2014	EACH OCCURRENCE	$ 1,000,000
							DAMAGE TO RENTED PREMISES (Ea occurrence)	$ 50,000
							MED EXP (Any one person)	$ 5,000
							PERSONAL & ADV INJURY	$ 1,000,000
							GENERAL AGGREGATE	$ 2,000,000
							PRODUCTS - COMP/OP AGG	$ 2,000,000
								$
B	AUTOMOBILE LIABILITY X ANY AUTO X ALL OWNED AUTOS X HIRED AUTOS SCHEDULED AUTOS X NON-OWNED AUTOS	X	X	BA8968891	11/27/2013	08/16/2014	COMBINED SINGLE LIMIT (Ea accident)	$ 1,000,000
							BODILY INJURY (Per person)	$
							BODILY INJURY (Per accident)	$
							PROPERTY DAMAGE (PER ACCIDENT)	$
								$
C	UMBRELLA LIAB X OCCUR X EXCESS LIAB CLAIMS-MADE DED RETENTION $ -0-			NHA234200	10/30/2013	08/16/2014	EACH OCCURRENCE	$ 5,000,000
							AGGREGATE	$ 5,000,000
								$
D	WORKERS COMPENSATION AND EMPLOYERS' LIABILITY ANY PROPRIETOR/PARTNER/EXECUTIVE OFFICER/MEMBER EXCLUDED? Y / N (Mandatory in NH) If yes, describe under DESCRIPTION OF OPERATIONS below	N/A	X	9061952	07/01/2013	07/01/2014	X WC STATU-TORY LIMITS OTH-ER	
							E.L. EACH ACCIDENT	$ 1,000,000
							E.L. DISEASE - EA EMPLOYEE	$ 1,000,000
							E.L. DISEASE - POLICY LIMIT	$ 1,000,000
E	Homeland Insurance Cont.Poll Liab			793-00-17-75-0000	01/10/2014	01/10/2015	Occ/Aggre	1,000,000
							Retention	2,500

DESCRIPTION OF OPERATIONS / LOCATIONS / VEHICLES (Attach ACORD 101, Additional Remarks Schedule, if more space is required)

Policy Forms attached. CG2037;CA2033; CG2404;CG2503, 10217, CECA701
REF: West Tunnel Ramps Access (PN:T15029031)SCIF-Form 10217
City of Sacramento, its officials, employees and volunteers are named additional insured as required by written contract.

CERTIFICATE HOLDER PUBLIC1

City of Sacramento
Department of Public Works
915 I Street, Rm 2000
Sacramento, CA 95814-2402

CANCELLATION

SHOULD ANY OF THE ABOVE DESCRIBED POLICIES BE CANCELLED BEFORE THE EXPIRATION DATE THEREOF, NOTICE WILL BE DELIVERED IN ACCORDANCE WITH THE POLICY PROVISIONS.

AUTHORIZED REPRESENTATIVE

A. Catherine Allen

© 1988-2010 ACORD CORPORATION. All rights reserved.

THIS ENDORSEMENT CHANGES THE POLICY. PLEASE READ IT CAREFULLY.

ADDITIONAL INSURED – OWNERS, LESSEES OR CONTRACTORS – AUTOMATIC STATUS WHEN REQUIRED IN CONSTRUCTION AGREEMENT WITH YOU

This endorsement modifies insurance provided under the following:

COMMERCIAL GENERAL LIABILITY COVERAGE PART

A. **Section II – Who Is An Insured** is amended to include as an additional insured any person or organization for whom you are performing operations when you and such person or organization have agreed in writing in a contract or agreement that such person or organization be added as an additional insured on your policy. Such person or organization is an additional insured only with respect to liability for "bodily injury", "property damage" or "personal and advertising injury" caused, in whole or in part, by:

1. Your acts or omissions; or
2. The acts or omissions of those acting on your behalf;

in the performance of your ongoing operations for the additional insured.

A person's or organization's status as an additional insured under this endorsement ends when your operations for that additional insured are completed.

B. With respect to the insurance afforded to these additional insureds, the following additional exclusions apply:

This insurance does not apply to:

1. "Bodily injury", "property damage" or "personal and advertising injury" arising out of the rendering of, or the failure to render, any professional architectural, engineering or surveying services, including:
   a. The preparing, approving, or failing to prepare or approve, maps, shop drawings, opinions, reports, surveys, field orders, change orders or drawings and specifications; or
   b. Supervisory, inspection, architectural or engineering activities.
2. "Bodily injury" or "property damage" occurring after:
   a. All work, including materials, parts or equipment furnished in connection with such work, on the project (other than service, maintenance or repairs) to be performed by or on behalf of the additional insured(s) at the location of the covered operations has been completed; or
   b. That portion of "your work" out of which the injury or damage arises has been put to its intended use by any person or organization other than another contractor or subcontractor engaged in performing operations for a principal as a part of the same project.

© ISO Properties, Inc., 2004

B & M Builders, Inc.

POLICY NUMBER: LA13CGL019451-00

COMMERCIAL GENERAL LIABILITY
CG 24 04 10 93

THIS ENDORSEMENT CHANGES THE POLICY. PLEASE READ IT CAREFULLY.

WAIVER OF TRANSFER OF RIGHTS OF RECOVERY AGAINST OTHERS TO US

This endorsement modifies insurance provided under the following:

COMMERCIAL GENERAL LIABILITY COVERAGE PART

SCHEDULE

Name of Person or Organization:

ANY PERSON OR ORGANIZATION WHEN YOU AND SUCH PERSON OR ORGANIZATION HAVE AGREED IN WRITING IN A CONTRACT OR AGREEMENT THAT YOU WILL WAIVE ANY RIGHT OF RECOVERY AGAINST SUCH PERSON OR ORGANIZATION.

(If no entry appears above, information required to complete this endorsement will be shown in the Declarations as applicable to this endorsement.)

The TRANSFER OF RIGHTS OF RECOVERY AGAINST OTHERS TO US Condition (Section IV – COMMERCIAL GENERAL LIABILITY CONDITIONS) is amended by the addition of the following:

We waive any right of recovery we may have against the person or organization shown in the Schedule above because of payments we make for injury or damage arising out of your ongoing operations or "your work" done under a contract with that person or organization and included in the "products-completed operations hazard". This waiver applies only to the person or organization shown in the Schedule above.

Copyright, Insurance Services Office, Inc., 1992

B & M Builders, Inc.

POLICY NUMBER: LA13CGL019451-00

COMMERCIAL GENERAL LIABILITY
CG 20 37 07 04

THIS ENDORSEMENT CHANGES THE POLICY. PLEASE READ IT CAREFULLY.

ADDITIONAL INSURED – OWNERS, LESSEES OR CONTRACTORS – COMPLETED OPERATIONS

This endorsement modifies insurance provided under the following:

COMMERCIAL GENERAL LIABILITY COVERAGE PART

SCHEDULE

Name Of Additional Insured Person(s) Or Organization(s):	Location And Description Of Completed Operations
Any person or organization for whom you are performing "commercial construction" during the period of this policy and have agreed in a written contract to add as an additional insured for products-completed operations. "Commercial construction" does not include any habitational or residential construction other than apartments or hotels.	
Information required to complete this Schedule, if not shown above, will be shown in the Declarations.	

Section II – Who Is An Insured is amended to include as an additional insured the person(s) or organization(s) shown in the Schedule, but only with respect to liability for "bodily injury" or "property damage" caused, in whole or in part, by "your work" at the location designated and described in the schedule of this endorsement performed for that additional insured and included in the "products-completed operations hazard".

© ISO Properties, Inc., 2004

THIS ENDORSEMENT CHANGES THE POLICY. PLEASE READ IT CAREFULLY.

AMENDMENT - AGGREGATE LIMITS OF INSURANCE PER PROJECT

This endorsement modifies insurance provided under the following:

COMMERCIAL GENERAL LIABILITY COVERAGE PART.

The General Aggregate Limit under LIMITS OF INSURANCE (SECTION III) applies separately to each of your projects away from premises owned by or rented to you.

 Copyright, Insurance Services Office, Inc., 1984

SECTION NO. 15 - SCHEDULE OF WAGES

General Decision Number: CA130009 12/06/2013 CA9

Superseded General Decision Number: CA20120009

State: California

Construction Types: Building, Heavy (Heavy and Dredging) and Highway

Counties: Alpine, Amador, Butte, Colusa, El Dorado, Glenn, Lassen, Marin, Modoc, Napa, Nevada, Placer, Plumas, Sacramento, Shasta, Sierra, Siskiyou, Solano, Sonoma, Sutter, Tehama, Trinity, Yolo and Yuba Counties in California.

BUILDING CONSTRUCTION PROJECTS (excluding Amador County only); DREDGING CONSTRUCTION PROJECTS (does not include hopper dredge work); HEAVY CONSTRUCTION PROJECTS (does not include water well drilling); AND HIGHWAY CONSTRUCTION PROJECTS

Modification Number	Publication Date
0	01/04/2013
1	01/11/2013
2	02/08/2013
3	03/01/2013
4	03/08/2013
5	03/22/2013
6	04/05/2013
7	04/12/2013
8	05/10/2013
9	05/31/2013
10	06/07/2013
11	07/05/2013
12	07/19/2013
13	08/09/2013
14	08/23/2013
15	08/30/2013
16	09/06/2013
17	09/20/2013
18	09/27/2013
19	10/04/2013
20	11/15/2013
21	12/06/2013

ASBE0016-001 08/01/2013

AREA 1: ALAMEDA, CONTRA COSTA, LAKE, MARIN, MENDOCINO, MONTEREY, NAPA, SAN BENITO, SAN FRANCISCO, SAN MATEO, SANTA CLARA, SANTA CRUZ, SOLANO, & SONOMA COUNTIES

AREA 2: ALPINE, AMADOR, BUTTE, CALAVERAS, COLUSA, DEL NORTE, EL DORADO, FRESNO, GLENN, HUMBOLDT, KINGS, LASSEN, MADERA, MARIPOSA, MERCED, MODOC, MONO, NEVADA, PLACER, PLUMAS, SACRAMENTO, SAN JOAQUIN, SHASTA, SIERRA, SISKIYOU, STANISLAU, SUTTER, TEHEMA, TRINITY, TULARE, TUOLUMNE, YOLO, & YUBA COUNTIES

Rates Fringes

Asbestos Workers/Insulator
(Includes the application of
all insulating materials,
Protective Coverings,
Coatings, and Finishes to all
types of mechanical systems)
Area 1.....$ 57.15 18.62
Area 2.....$ 44.05 18.62

ASBE0016-007 01/01/2013

	Rates	Fringes
Asbestos Removal worker/hazardous material handler (Includes preparation, wetting, stripping, removal, scrapping, vacuuming, bagging and disposing of all insulation materials from mechanical systems, whether they contain asbestos or not)....	$ 31.13	6.95

BOIL0549-002 01/01/2013

	Rates	Fringes
BOILERMAKER		
(1) Marin & Solano Counties.	$ 42.06	33.43
(2) Remaining Counties.....	$ 38.37	31.32

BRCA0003-001 06/01/2011

	Rates	Fringes
MARBLE FINISHER.....	$ 28.02	12.22

BRCA0003-004 05/01/2011

AREA 1: ALPINE, AMADOR, BUTTE, COLUSA, EL DORADO, GLENN, LASSEN, MODOC, NEVADA, PLACER, PLUMAS, SACRAMENTO, SHASTA, SIERRA, SUTTER, TEHAMA, YOLO AND YUBA COUNTIES

AREA 2: MARIN, NAPA, SISKIYOU, SOLANO, SONOMA AND TRINITY COUNTIES

	Rates	Fringes
BRICKLAYER		
AREA 1.....	$ 35.11	18.99
AREA 2.....	$ 39.85	22.00

SPECIALTY PAY:
(A) Underground work such as tunnel work, sewer work, manholes, catch basins, sewer pipes and telephone conduit shall be paid $1.25 per hour above the regular rate. Work in direct contact with raw sewage shall receive $1.25 per

hour in addition to the above.
(B) Operating a saw or grinder shall receive $1.25 per hour above the regular rate.
(C) Gunite nozzle person shall receive $1.25 per hour above the regular rate.

BRCA0003-008 07/01/2013

	Rates	Fringes
TERRAZZO FINISHER	$ 33.15	13.93
TERRAZZO WORKER/SETTER	$ 39.95	24.39

BRCA0003-010 01/01/2011

	Rates	Fringes
TILE FINISHER		
Area 1	$ 21.21	10.01
Area 2	$ 21.26	12.44
Area 3	$ 21.44	12.31
Area 4	$ 20.93	11.79
Tile Layer		
Area 1	$ 36.08	11.95
Area 2	$ 34.41	13.68
Area 3	$ 38.61	13.73
Area 4	$ 35.45	13.68

AREA 1: Butte, Colusa, El Dorado, Glenn, Lassen, Modoc, Nevada, Placer, Plumas, Sacramento, Shasta, Sierra, Sutter, Tehema, Yolo, Yuba
AREA 2: Alpine, Amador
AREA 3: Marin, Napa, Solano, Siskiyou
AREA 4: Sonoma

BRCA0003-014 06/01/2011

	Rates	Fringes
MARBLE MASON	$ 39.22	18.68

CARP0034-001 07/01/2013

	Rates	Fringes
Diver		
Assistant Tender, ROV Tender/Technician	$ 38.60	29.78
Diver standby	$ 43.38	29.78
Diver Tender	$ 42.38	29.78
Diver wet	$ 85.91	29.78
Manifold Operator (mixed gas)	$ 47.38	29.78
Manifold Operator (Standby)	$ 42.38	29.78

DEPTH PAY (Surface Diving):
050 to 100 ft $2.00 per foot
101 to 150 ft $3.00 per foot

151 to 220 ft $4.00 per foot

SATURATION DIVING:
The standby rate shall apply until saturation starts. The saturation diving rate applies when divers are under pressure continuously until work task and decompression are complete. The diver rate shall be paid for all saturation hours.

DIVING IN ENCLOSURES:
Where it is necessary for Divers to enter pipes or tunnels, or other enclosures where there is no vertical ascent, the following premium shall be paid: Distance traveled from entrance 26 feet to 300 feet: $1.00 per foot. When it is necessary for a diver to enter any pipe, tunnel or other enclosure less than 48" in height, the premium will be $1.00 per foot.

WORK IN COMBINATION OF CLASSIFICATIONS:
Employees working in any combination of classifications within the diving crew (except dive supervisor) in a shift are paid in the classification with the highest rate for that shift.

CARP0034-003 07/01/2013

	Rates	Fringes
Piledriver	$ 38.60	29.78

CARP0035-001 08/01/2013

AREA 1: MARIN, NAPA, SOLANO & SONOMA

AREA 3: SACRAMENTO, WESTERN EL DORADO (Territory west of an including highway 49 and the territory inside the city limits of Placerville), WESTERN PLACER (Territory west of and including highway 49), & YOLO

AREA 4: ALPINE, BUTTE, COLUSA, EASTERN EL DORADO, GLENN, LASSEN, MODOC, NEVADA, EASTERN PLACER, PLUMAS, SHASTA, SIERRA, SISKIYOU, SUTTER, TEHAMA, TRINITY, & YUBA

	Rates	Fringes
Drywall Installers/Lathers:		
Area 1	$ 39.35	27.02
Area 3	$ 33.97	27.02
Area 4	$ 32.62	27.02
Drywall Stocker/Scrapper		
Area 1	$ 19.68	15.65
Area 3	$ 16.99	15.65
Area 4	$ 16.31	15.65

CARP0035-009 07/01/2013

Marin County

	Rates	Fringes
CARPENTER		
Bridge Builder/Highway Carpenter	$ 39.35	26.58
Hardwood Floorlayer, Shingler, Power Saw Operator, Steel Scaffold & Steel Shoring Erector, Saw Filer	$ 39.50	26.58
Journeyman Carpenter	$ 39.35	26.58
Millwright	$ 39.45	28.17

CARP0035-010 07/01/2013

AREA 1: Marin, Napa, Solano & Sonoma Counties

AREA 2: Alpine, San Benito and Santa Cruz

AREA 3: Alpine, Butte, Colusa, El Dorado, Glenn, Lassen, Modoc, Nevada, Placer, Plumas, Sacramento, Shasta, Sierra, Siskiyou, Sutter, Tehama, Trinity, Yolo & Yuba counties

	Rates	Fringes
Modular Furniture Installer		
Area 1		
Installer I	$ 22.96	17.52
Installer II	$ 19.53	17.52
Lead Installer	$ 26.41	18.02
Master Installer	$ 30.63	18.02
Area 2		
Installer I	$ 20.31	17.52
Installer II	$ 17.36	17.52
Lead Installer	$ 23.28	18.02
Master Installer	$ 26.91	18.02
Area 3		
Installer I	$ 19.36	17.52
Installer II	$ 16.59	17.52
Lead Installer	$ 22.16	18.02
Master Installer	$ 25.58	18.02

CARP0046-001 07/01/2013

El Dorado (West), Placer (West), Sacramento and Yolo Counties

	Rates	Fringes
Carpenters		
Bridge Builder/Highway Carpenter	$ 39.35	26.58
Hardwood Floorlayer, Shingler, Power Saw Operator, Steel Scaffold & Steel Shoring Erector, Saw Filer	$ 33.62	26.58
Journeyman Carpenter	$ 33.47	26.58
Millwright	$ 35.97	28.17

Footnote: Placer County (West) includes territory West of and including Highway 49 and El Dorado County (West) includes territory West of and including Highway 49 and territory inside the city limits of Placerville.

CARP0046-002 07/01/2013

Alpine, Colusa, El Dorado (East), Nevada, Placer (East), Sierra, Sutter and Yuba Counties

	Rates	Fringes
Carpenters		
Bridge Builder/Highway Carpenter	$ 39.35	26.58
Hardwood Floorlayer, Shingler, Power Saw Operator, Steel Scaffold & Steel Shoring Erector, Saw Filer	$ 32.27	26.58
Journeyman Carpenter	$ 32.12	26.58
Millwright	$ 34.62	28.17

CARP0152-003 07/01/2013

Amador County

	Rates	Fringes
Carpenters		
Bridge Builder/Highway Carpenter	$ 39.35	26.58
Hardwood Floorlayer, Shingler, Power Saw Operator, Steel Scaffold & Steel Shoring Erector, Saw Filer	$ 32.27	26.58
Journeyman Carpenter	$ 32.12	26.58
Millwright	$ 34.62	28.17

CARP0180-001 07/01/2013

Solano County

	Rates	Fringes
Carpenters		
Bridge Builder/Highway Carpenter	$ 39.35	26.58
Hardwood Floorlayer, Shingler, Power Saw Operator, Steel Scaffold & Steel Shoring Erector, Saw Filer	$ 39.50	26.58
Journeyman Carpenter	$ 39.35	26.58
Millwright	$ 39.45	28.17

CARP0751-001 07/01/2013

Napa and Sonoma Counties

	Rates	Fringes
Carpenters		
Bridge Builder/Highway Carpenter	$ 39.35	26.58
Hardwood Floorlayer, Shingler, Power Saw Operator, Steel Scaffold & Steel Shoring Erector, Saw Filer	$ 39.50	26.58
Journeyman Carpenter	$ 39.35	26.58
Millwright	$ 39.45	28.17

CARP1599-001 07/01/2013

Butte, Glenn, Lassen, Modoc, Plumas, Shasta, Siskiyou, Tehama and Trinity Counties

	Rates	Fringes
Carpenters		
Bridge Builder/Highway Carpenter	$ 39.35	26.58
Hardwood Floorlayer, Shingler, Power Saw Operator, Steel Scaffold & Steel Shoring Erector, Saw Filer	$ 32.27	26.58
Journeyman Carpenter	$ 32.12	26.58
Millwright	$ 34.62	28.17

ELEC0180-001 06/01/2013

NAPA AND SOLANO COUNTIES

	Rates	Fringes
CABLE SPLICER	$ 49.29	21.609
ELECTRICIAN	$ 43.81	21.444

ELEC0180-003 12/01/2012

NAPA AND SOLANO COUNTIES

	Rates	Fringes
Sound & Communications		
Installer	$ 30.62	3%+14.45
Technician	$ 34.86	3%+14.45

SCOPE OF WORK INCLUDES-
SOUND & VOICE TRANSMISSION (Music, Intercom, Nurse Call, Telephone); FIRE ALARM SYSTEMS [excluding fire alarm work when installed in raceways (including wire and cable pulling) and when performed on new or major remodel building projects or jobs],

TELEVISION & VIDEO SYSTEMS, SECURITY SYSTEMS, COMMUNICATIONS SYSTEMS that transmit or receive information and/or control systems that are intrinsic to the above.

EXCLUDES-
Excludes all other data systems or multiple systems which include control function or power supply; excludes installation of raceway systems, line voltage work, industrial work, life-safety systems (all buildings having floors located more than 75' above the lowest floor level having building access); excludes energy management systems.

ELEC0340-002 12/01/2012

ALPINE, AMADOR, BUTTE, COLUSA, EL DORADO, GLENN, LASSEN, NEVADA, PLACER, PLUMAS, SACRAMENTO, TRINITY, YOLO, YUBA COUNTIES

	Rates	Fringes
Communications System		
Sound & Communications Installer	$ 24.38	3%+12.05
Sound & Communications Technician	$ 28.04	3%+12.05

SCOPE OF WORK

Includes the installation testing, service and maintenance, of the following systems which utilize the transmission and/or transference of voice, sound, vision and digital for commercial, education, security and entertainment purposes for the following TV monitoring and surveillance, background-foreground music, intercom and telephone interconnect, inventory control systems, microwave transmission, multi-media, multiplex, nurse call system, radio page, school intercom and sound, burglar alarms, and low voltage master clock systems.

A. SOUND AND VOICE TRANSMISSION/TRANSFERENCE SYSTEMS
Background foreground music Intercom and telephone interconnect systems, Telephone systems, Nurse call systems, Radio page systems, School intercom and sound systems, Burglar alarm systems, Low voltage master clock systems, Multi-media/multiplex systems, Sound and musical entertainment systems, RF systems, Antennas and Wave Guide.

B. FIRE ALARM SYSTEMS
Installation, wire pulling and testing

C. TELEVISION AND VIDEO SYSTEMS Television monitoring and surveillance systems, Video security systems, Video entertainment systems, Video educational systems, Microwave transmission systems, CATV and CCTV

D. SECURITY SYSTEMS Perimeter security systems Vibration sensor systems Card access systems Access control systems Sonar/infrared monitoring equipment

E. COMMUNICATIONS SYSTEMS THAT TRANSMIT OR RECEIVE INFORMATION AND/OR CONTROL SYSTEMS THAT ARE INTRINSIC TO THE ABOVE LISTED SYSTEMS SCADA (Supervisory Control and Data Acquisition) PCM (Pulse Code Modulation) Inventory Control Systems Digital Data Systems Broadband and Baseband and Carriers Point of Sale Systems VSAT Data Systems Data Communication Systems RF and Remote Control Systems Fiber Optic Data Systems WORK EXCLUDED Raceway systems are not covered (excluding Ladder-Rack for the purpose of the above listed systems). Chases and/or nipples (not to exceed 10 feet) may be installed on open wiring systems. Energy management systems. SCADA (Supervisory Control and Data Acquisition) when not intrinsic to the above listed systems (in the scope). Fire alarm systems when installed in raceways (including wire and cable pulling) shall be performed at the electrician wage rate, when either of the following two (2) conditions apply:
1. The project involves new or major remodel building trades construction.
2. The conductors for the fire alarm system are installed in conduit.

ELEC0340-003 12/01/2012

ALPINE (West of Sierra Mt. Watershed), AMADOR, BUTTE, COLUSA, EL DORADO (West of Sierra Mt. Watershed), GLENN, LASSEN, NEVADA (West of Sierra Mt. Watershed), PLACER, PLUMAS, SACRAMENTO, SHASTA, SIERRA (West of Sierra Mt. Watershed), SUTTER, TEHAMA, TRINITY, YOLO & YUBA COUNTIES

	Rates	Fringes
ELECTRICIAN		
Remaining area.....	$ 38.93	18.29
Sierra Army Depot, Herlong..	$ 48.66	3%+13.25
Tunnel work.....	$ 40.88	3%+13.25

CABLE SPLICER: Receives 110% of the Electrician basic hourly rate.

ELEC0401-005 07/01/2013

ALPINE (east of the main watershed divide), EL DORADO (east of the main watershed divide), NEVADA (east of the main watershed), PLACER (east of the main watershed divide) and SIERRA (east of the main watershed divide) COUNTIES:

	Rates	Fringes
ELECTRICIAN.....	$ 37.00	14.62

ELEC0551-004 06/01/2013

MARIN AND SONOMA COUNTIES

	Rates	Fringes
ELECTRICIAN.....	$ 46.70	15.21

---

* ELEC0551-005 12/01/2013

MARIN & SONOMA COUNTIES

	Rates	Fringes
Sound & Communications		
Installer.....	$ 31.32	16.23
Technician.....	$ 35.66	16.36

SCOPE OF WORK INCLUDES-
SOUND & VOICE TRANSMISSION (Music, Intercom, Nurse Call, Telephone); FIRE ALARM SYSTEMS [excluding fire alarm work when installed in raceways (including wire and cable pulling) and when performed on new or major remodel building projects or jobs], TELEVISION & VIDEO SYSTEMS, SECURITY SYSTEMS, COMMUNICATIONS SYSTEMS that transmit or receive information and/or control systems that are intrinsic to the above.

EXCLUDES-
Excludes all other data systems or multiple systems which include control function or power supply; excludes installation of raceway systems, line voltage work, industrial work, life-safety systems (all buildings having floors located more than 75' above the lowest floor level having building access); excludes energy management systems.

ELEC0659-006 01/01/2013

DEL NORTE, MODOC and SISKIYOU COUNTIES

	Rates	Fringes
ELECTRICIAN.....	$ 30.27	14.81

ELEC0659-008 02/01/2013

DEL NORTE, MODOC & SISKIYOU COUNTIES

	Rates	Fringes
Line Construction		
(1) Cable Splicer.....	$ 51.09	4%+13.30
(2) Lineman, Pole Sprayer, Heavy Line Equipment Man....	$ 45.62	4%+13.30
(3) Tree Trimmer.....	$ 32.07	4%+9.80
(4) Line Equipment Man.....	$ 45.62	4%+9.80
(5) Powdermen, Jackhammermen.....	$ 34.22	4%+9.80
(6) Groundman.....	$ 31.31	4%+9.80

ELEC1245-004 06/01/2013

ALL COUNTIES EXCEPT DEL NORTE, MODOC & SISKIYOU

	Rates	Fringes
LINE CONSTRUCTION		
(1) Lineman; Cable splicer..	$ 50.30	15
(2) Equipment specialist (operates crawler tractors, commercial motor vehicles, backhoes, trenchers, cranes (50 tons and below), overhead & underground distribution line equipment).....	$ 40.17	14.56
(3) Groundman.....	$ 30.73	13.48
(4) Powderman.....	$ 44.91	13.48

HOLIDAYS: New Year's Day, M.L. King Day, Memorial Day, Independence Day, Labor Day, Veterans Day, Thanksgiving Day and day after Thanksgiving, Christmas Day

---

ELEV0008-001 01/01/2013

	Rates	Fringes
ELEVATOR MECHANIC.....	$ 58.07	25.185

FOOTNOTE:
PAID VACATION: Employer contributes 8% of regular hourly rate as vacation pay credit for employees with more than 5 years of service, and 6% for 6 months to 5 years of service.
PAID HOLIDAYS: New Years Day, Memorial Day, Independence Day, Labor Day, Veterans Day, Thanksgiving Day, Friday after Thanksgiving, and Christmas Day.

ENGI0003-008 07/01/2013

	Rates	Fringes
Dredging: (DREDGING: CLAMSHELL & DIPPER DREDGING; HYDRAULIC SUCTION DREDGING:)		
AREA 1:		
(1) Leverman.....	$ 40.53	27.81
(2) Dredge Dozer; Heavy duty repairman.....	$ 35.57	27.81
(3) Booster Pump Operator; Deck Engineer; Deck mate; Dredge Tender; Winch Operator.....	$ 34.45	27.81
(4) Bargeman; Deckhand; Fireman; Leveehand; Oiler..	$ 31.15	27.81
AREA 2:		
(1) Leverman.....	$ 42.53	27.81
(2) Dredge Dozer; Heavy duty repairman.....	$ 37.57	27.81

(3) Booster Pump
Operator; Deck
Engineer; Deck mate;
Dredge Tender; Winch
Operator.....$ 36.45 27.81
(4) Bargeman; Deckhand;
Fireman; Leveehand; Oiler..$ 33.15 27.81

AREA DESCRIPTIONS

AREA 1: ALAMEDA,BUTTE, CONTRA COSTA, KINGS, MARIN, MERCED, NAPA, SACRAMENTO, SAN BENITO, SAN FRANCISCO, SAN JOAQUIN, SAN MATEO, SANTA CLARA, SANTA CRUZ, SOLANO, STANISLAUS, SUTTER, YOLO, AND YUBA COUNTIES

AREA 2: MODOC COUNTY

THE REMAINGING COUNTIES ARE SPLIT BETWEEN AREA 1 AND AREA 2 AS NOTED BELOW:

ALPINE COUNTY:
Area 1: Northernmost part
Area 2: Remainder

CALAVERAS COUNTY:
Area 1: Remainder
Area 2: Eastern part

COLUSA COUNTY:
Area 1: Eastern part
Area 2: Remainder

ELDORADO COUNTY:
Area 1: North Central part
Area 2: Remainder

FRESNO COUNTY:
Area 1: Remainder
Area 2: Eastern part

GLENN COUNTY:
Area 1: Eastern part
Area 2: Remainder

LASSEN COUNTY:
Area 1: Western part along the Southern portion of border with Shasta County
Area 2: Remainder

MADERA COUNTY:
Area 1: Except Eastern part
Area 2: Eastern part

MARIPOSA COUNTY
Area 1: Except Eastern part
Area 2: Eastern part

MONTERREY COUNTY
Area 1: Except Southwestern part
Area 2: Southwestern part

NEVADA COUNTY:
Area 1: All but the Northern portion along the border of Sierra County
Area 2: Remainder

PLACER COUNTY:
Area 1: Al but the Central portion
Area 2: Remainder

PLUMAS COUNTY:
Area 1: Western portion
Area 2: Remainder

SHASTA COUNTY:
Area 1: All but the Northeastern corner
Area 2: Remainder

SIERRA COUNTY:
Area 1: Western part
Area 2: Remainder

SISKIYOU COUNTY:
Area 1: Central part
Area 2: Remainder

SONOMA COUNTY:
Area 1: All but the Northwestern corner
Area 2: Remainder

TEHAMA COUNTY:
Area 1: All but the Western border with Mendocino & Trinity Counties
Area 2: Remainder

TRINITY COUNTY:
Area 1: East Central part and the Northeastern border with Shasta County
Area 2: Remainder

TUOLUMNE COUNTY:
Area 1: Except Eastern part
Area 2: Eastern part

ENGI0003-018 07/01/2013

"AREA 1" WAGE RATES ARE LISTED BELOW

"AREA 2" RECEIVES AN ADDITIONAL $2.00 PER HOUR ABOVE AREA 1 RATES.

SEE AREA DEFINITIONS BELOW

	Rates	Fringes
OPERATOR: Power Equipment (AREA 1:)		
GROUP 1	$ 39.02	26.27

GROUP 2.....$ 37.49 26.27
GROUP 3.....$ 36.01 26.27
GROUP 4.....$ 34.63 26.27
GROUP 5.....$ 33.36 26.27
GROUP 6.....$ 32.04 26.27
GROUP 7.....$ 30.90 26.27
GROUP 8.....$ 29.76 26.27
GROUP 8-A.....$ 27.55 26.27

OPERATOR: Power Equipment
(Cranes and Attachments -
AREA 1:)

GROUP 1
Cranes.....$ 39.90 26.27
Oiler.....$ 32.93 26.27
Truck crane oiler.....$ 36.50 26.27

GROUP 2
Cranes.....$ 32.67 26.27
Oiler.....$ 32.67 26.27
Truck crane oiler.....$ 36.21 26.27

GROUP 3
Cranes.....$ 36.40 26.27
Hydraulic.....$ 32.04 26.27
Oiler.....$ 32.43 26.27
Truck Crane Oiler.....$ 35.94 26.27

OPERATOR: Power Equipment
(Piledriving - AREA 1:)

GROUP 1
Lifting devices.....$ 40.24 26.27
Oiler.....$ 30.98 26.27
Truck crane oiler.....$ 33.26 26.27

GROUP 2
Lifting devices.....$ 38.42 26.27
Oiler.....$ 30.71 26.27
Truck Crane Oiler.....$ 33.01 26.27

GROUP 3
Lifting devices.....$ 36.74 26.27
Oiler.....$ 30.49 26.27
Truck Crane Oiler.....$ 32.72 26.27

GROUP 4
Lifting devices.....$ 34.97 26.27

GROUP 5
Lifting devices.....$ 33.67 26.27

GROUP 6
Lifting devices.....$ 32.33 26.27

OPERATOR: Power Equipment
(Steel Erection - AREA 1:)

GROUP 1
Cranes.....$ 40.87 26.27
Oiler.....$ 31.32 26.27
Truck Crane Oiler.....$ 33.55 26.27

GROUP 2
Cranes.....$ 39.10 26.27
Oiler.....$ 31.05 26.27
Truck Crane Oiler.....$ 33.33 26.27

GROUP 3
Cranes.....$ 37.62 26.27
Hydraulic.....$ 32.67 26.27
Oiler.....$ 30.83 26.27
Truck Crane Oiler.....$ 33.06 26.27

GROUP 4

Cranes	$ 35.60	26.27
GROUP 5		
Cranes	$ 34.30	26.27

OPERATOR: Power Equipment
(Tunnel and Underground Work
- AREA 1:)

SHAFTS, STOPES, RAISES:		
GROUP 1	$ 35.12	26.27
GROUP 1-A	$ 37.59	26.27
GROUP 2	$ 33.86	26.27
GROUP 3	$ 32.53	26.27
GROUP 4	$ 31.39	26.27
GROUP 5	$ 30.25	26.27
UNDERGROUND:		
GROUP 1	$ 35.02	26.27
GROUP 1-A	$ 37.49	26.27
GROUP 2	$ 33.76	26.27
GROUP 3	$ 32.43	26.27
GROUP 4	$ 31.29	26.27
GROUP 5	$ 30.15	26.27

FOOTNOTE: Work suspended by ropes or cables, or work on a Yo-Yo Cat: $.60 per hour additional.

POWER EQUIPMENT OPERATOR CLASSIFICATIONS

GROUP 1: Operator of helicopter (when used in erection work); Hydraulic excavator, 7 cu. yds. and over; Power shovels, over 7 cu. yds.

GROUP 2: Highline cableway; Hydraulic excavator, 3-1/2 cu. yds. up to 7 cu. yds.; Licensed construction work boat operator, on site; Power blade operator (finish); Power shovels, over 1 cu. yd. up to and including 7 cu. yds. m.r.c.

GROUP 3: Asphalt milling machine; Cable backhoe; Combination backhoe and loader over 3/4 cu. yds.; Continuous flight tie back machine assistant to engineer or mechanic; Crane mounted continuous flight tie back machine, tonnage to apply; Crane mounted drill attachment, tonnage to apply; Dozer, slope brd; Gradall; Hydraulic excavator, up to 3 1/2 cu. yds.; Loader 4 cu. yds. and over; Long reach excavator; Multiple engine scraper (when used as push pull); Power shovels, up to and including 1 cu. yd.; Pre-stress wire wrapping machine; Side boom cat, 572 or larger; Track loader 4 cu. yds. and over; Wheel excavator (up to and including 750 cu. yds. per hour)

GROUP 4: Asphalt plant engineer/box person; Chicago boom; Combination backhoe and loader up to and including 3/4 cu. yd.; Concrete batch plant (wet or dry); Dozer and/or push cat; Pull- type elevating loader; Gradesetter, grade checker (GPS, mechanical or otherwise); Grooving and grinding machine; Heading shield operator; Heavy-duty drilling equipment, Hughes, LDH, Watson 3000 or similar; Heavy-duty repairperson and/or welder; Lime spreader; Loader under 4 cu. yds.; Lubrication and service engineer (mobile and grease rack); Mechanical finishers or spreader

machine (asphalt, Barber-Greene and similar); Miller Formless M-9000 slope paver or similar; Portable crushing and screening plants; Power blade support; Roller operator, asphalt; Rubber-tired scraper, self-loading (paddle-wheels, etc.); Rubber- tired earthmoving equipment (scrapers); Slip form paver (concrete); Small tractor with drag; Soil stabilizer (P & H or equal); Spider plow and spider puller; Tubex pile rig; Unlicensed constuction work boat operator, on site; Timber skidder; Track loader up to 4 yds.; Tractor-drawn scraper; Tractor, compressor drill combination; Welder; Woods-Mixer (and other similar Pugmill equipment)

GROUP 5: Cast-in-place pipe laying machine; Combination slusher and motor operator; Concrete conveyor or concrete pump, truck or equipment mounted; Concrete conveyor, building site; Concrete pump or pumpcrete gun; Drilling equipment, Watson 2000, Texoma 700 or similar; Drilling and boring machinery, horizontal (not to apply to waterliners, wagon drills or jackhammers); Concrete mixer/all; Person and/or material hoist; Mechanical finishers (concrete) (Clary, Johnson, Bidwell Bridge Deck or similar types); Mechanical burm, curb and/or curb and gutter machine, concrete or asphalt); Mine or shaft hoist; Portable crusher; Power jumbo operator (setting slip-forms, etc., in tunnels); Screed (automatic or manual); Self-propelled compactor with dozer; Tractor with boom D6 or smaller; Trenching machine, maximum digging capacity over 5 ft. depth; Vermeer T-600B rock cutter or similar

GROUP 6: Armor-Coater (or similar); Ballast jack tamper; Boom- type backfilling machine; Assistant plant engineer; Bridge and/or gantry crane; Chemical grouting machine, truck-mounted; Chip spreading machine operator; Concrete saw (self-propelled unit on streets, highways, airports and canals); Deck engineer; Drilling equipment Texoma 600, Hughes 200 Series or similar up to and including 30 ft. m.r.c.; Drill doctor; Helicopter radio operator; Hydro-hammer or similar; Line master; Skidsteer loader, Bobcat larger than 743 series or similar (with attachments); Locomotive; Lull hi-lift or similar; Oiler, truck mounted equipment; Pavement breaker, truck-mounted, with compressor combination; Paving fabric installation and/or laying machine; Pipe bending machine (pipelines only); Pipe wrapping machine (tractor propelled and supported); Screed (except asphaltic concrete paving); Self- propelled pipeline wrapping machine; Tractor; Self-loading chipper; Concrete barrier moving machine

GROUP 7: Ballast regulator; Boom truck or dual-purpose A-frame truck, non-rotating - under 15 tons; Truck-mounted rotating telescopic boom type lifting device, Manitex or similar (boom truck) - under 15 tons; Cary lift or similar; Combination slurry mixer and/or cleaner; Drilling equipment, 20 ft. and under m.r.c.; Firetender (hot plant); Grouting machine operator; Highline cableway signalperson; Stationary belt loader (Kolman or similar); Lift slab machine (Vagtborg and similar types); Maginnes internal full slab vibrator; Material hoist (1 drum); Mechanical trench shield; Pavement breaker with or without compressor

combination); Pipe cleaning machine (tractor propelled and supported); Post driver; Roller (except asphalt); Chip Seal; Self-propelled automatically applied concrete curing mahcine (on streets, highways, airports and canals); Self-propelled compactor (without dozer); Signalperson; Slip-form pumps (lifting device for concrete forms); Tie spacer; Tower mobile; Trenching machine, maximum digging capacity up to and including 5 ft. depth; Truck- type loader

GROUP 8: Bit sharpener; Boiler tender; Box operator; Brakeperson; Combination mixer and compressor (shotcrete/gunite); Compressor operator; Deckhand; Fire tender; Forklift (under 20 ft.); Generator; Gunite/shotcrete equipment operator; Hydraulic monitor; Ken seal machine (or similar); Mixermobile; Oiler; Pump operator; Refrigeration plant; Reservoir-debris tug (self-propelled floating); Ross Carrier (construction site); Rotomist operator; Self-propelled tape machine; Shuttlecar; Self-propelled power sweeper operator (includes vacuum sweeper); Slusher operator; Surface heater; Switchperson; Tar pot firetender; Tugger hoist, single drum; Vacuum cooling plant; Welding machine (powered other than by electricity)

GROUP 8-A: Elevator operator; Skidsteer loader-Bobcat 743 series or smaller, and similar (without attachments); Mini excavator under 25 H.P. (backhoe-trencher); Tub grinder wood chipper

---

ALL CRANES AND ATTACHMENTS

GROUP 1: Clamshell and dragline over 7 cu. yds.; Crane, over 100 tons; Derrick, over 100 tons; Derrick barge pedestal-mounted, over 100 tons; Self-propelled boom-type lifting device, over 100 tons

GROUP 2: Clamshell and dragline over 1 cu. yd. up to and including 7 cu. yds.; Crane, over 45 tons up to and including 100 tons; Derrick barge, 100 tons and under; Self-propelled boom-type lifting device, over 45 tons; Tower crane

GROUP 3: Clamshell and dragline up to and including 1 cu. yd.; Cranes 45 tons and under; Self-propelled boom-type lifting device 45 tons and under; Boom Truck or dual purpose A-frame truck, non-rotating over 15 tons; Truck-mounted rotating telescopic boom type lifting device, Manitex or similar (boom truck) over 15 tons;

PILEDRIVERS

GROUP 1: Derrick barge pedestal mounted over 100 tons; Clamshell over 7 cu. yds.; Self-propelled boom-type lifting device over 100 tons; Truck crane or crawler, land or barge mounted over 100 tons

GROUP 2: Derrick barge pedestal mounted 45 tons to and including 100 tons; Clamshell up to and including 7 cu. yds.; Self-propelled boom-type lifting device over 45 tons; Truck crane or crawler, land or barge mounted, over 45 tons up to and including 100 tons; Fundex F-12 hydraulic pile rig

GROUP 3: Derrick barge pedestal mounted under 45 tons; Self-propelled boom-type lifting device 45 tons and under; Skid/scow piledriver, any tonnage; Truck crane or crawler, land or barge mounted 45 tons and under

GROUP 4: Assistant operator in lieu of assistant to engineer; Forklift, 10 tons and over; Heavy-duty repairperson/welder

GROUP 5: Deck engineer

GROUP 6: Deckhand; Fire tender

STEEL ERECTORS

GROUP 1: Crane over 100 tons; Derrick over 100 tons; Self-propelled boom-type lifting device over 100 tons

GROUP 2: Crane over 45 tons to 100 tons; Derrick under 100 tons; Self-propelled boom-type lifting device over 45 tons to 100 tons; Tower crane

GROUP 3: Crane, 45 tons and under; Self-propelled boom-type lifting device, 45 tons and under

GROUP 4: Chicago boom; Forklift, 10 tons and over; Heavy-duty repair person/welder

GROUP 5: Boom cat

TUNNEL AND UNDERGROUND WORK

GROUP 1-A: Tunnel bore machine operator, 20' diameter or more

GROUP 1: Heading shield operator; Heavy-duty repairperson; Mucking machine (rubber tired, rail or track type); Raised bore operator (tunnels); Tunnel mole bore operator

GROUP 2: Combination slusher and motor operator; Concrete pump or pumpcrete gun; Power jumbo operator

GROUP 3: Drill doctor; Mine or shaft hoist

GROUP 4: Combination slurry mixer cleaner; Grouting Machine operator; Motorman

GROUP 5: Bit Sharpener; Brakeman; Combination mixer and compressor (gunite); Compressor operator; Oiler; Pump operator; Slusher operator

---

AREA DESCRIPTIONS:

POWER EQUIPMENT OPERATORS, CRANES AND ATTACHMENTS,TUNNEL AND UNDERGROUND [These areas do not apply to Piledrivers and Steel Erectors]

AREA 1: ALAMEDA, BUTTE, CONTRA COSTA, KINGS, MARIN, MERCED, NAPA, SACRAMENTO, SAN BENITO, SAN FRANCISCO, SAN JOAQUIN, SAN MATEO, SANTA CLARA, SANTA CRUZ, SOLANO, STANISLAUS, SUTTER, YOLO, AND YUBA COUNTIES

AREA 2 - MODOC COUNTY

THE REMAINING COUNTIES ARE SPLIT BETWEEN AREA 1 AND AREA 2 AS NOTED BELOW:

ALPINE COUNTY:
Area 1: Northernmost part
Area 2: Remainder

CALAVERAS COUNTY:
Area 1: Except Eastern part
Area 2: Eastern part

COLUSA COUNTY:
Area 1: Eastern part
Area 2: Remainder

DEL NORTE COUNTY:
Area 1: Extreme Southwestern corner
Area 2: Remainder

ELDORADO COUNTY:
Area 1: North Central part
Area 2: Remainder

FRESNO COUNTY
Area 1: Except Eastern part
Area 2: Eastern part

GLENN COUNTY:
Area 1: Eastern part
Area 2: Remainder

HUMBOLDT COUNTY:
Area 1: Except Eastern and Southwestern parts
Area 2: Remainder

LAKE COUNTY:
Area 1: Southern part
Area 2: Remainder

LASSEN COUNTY:
Area 1: Western part along the Southern portion of border with Shasta County
Area 2: Remainder

MADERA COUNTY

Area 1: Remainder
Area 2: Eastern part

MARIPOSA COUNTY
Area 1: Remainder
Area 2: Eastern part

MENDOCINO COUNTY:
Area 1: Central and Southeastern parts
Area 2: Remainder

MONTEREY COUNTY
Area 1: Remainder
Area 2: Southwestern part

NEVADA COUNTY:
Area 1: All but the Northern portion along the border of Sierra County
Area 2: Remainder

PLACER COUNTY:
Area 1: All but the Central portion
Area 2: Remainder

PLUMAS COUNTY:
Area 1: Western portion
Area 2: Remainder

SHASTA COUNTY:
Area 1: All but the Northeastern corner
Area 2: Remainder

SIERRA COUNTY:
Area 1: Western part
Area 2: Remainder

SISKIYOU COUNTY:
Area 1: Central part
Area 2: Remainder

SONOMA COUNTY:
Area 1: All but the Northwestern corner
Area 2: Reaminder

TEHAMA COUNTY:
Area 1: All but the Western border with mendocino & Trinity Counties
Area 2: Remainder

TRINITY COUNTY:
Area 1: East Central part and the Northeaster border with Shasta County
Area 2: Remainder

TULARE COUNTY;
Area 1: Remainder
Area 2: Eastern part

TUOLUMNE COUNTY:
Area 1: Remainder

Area 2: Eastern Part

ENGI0003-019 06/25/2012

SEE AREA DESCRIPTIONS BELOW

	Rates	Fringes
OPERATOR: Power Equipment (LANDSCAPE WORK ONLY)		
GROUP 1		
AREA 1	$ 28.64	23.75
AREA 2	$ 30.64	23.75
GROUP 2		
AREA 1	$ 25.04	23.75
AREA 2	$ 27.04	23.75
GROUP 3		
AREA 1	$ 20.43	23.75
AREA 2	$ 22.43	23.75

GROUP DESCRIPTIONS:

GROUP 1: Landscape Finish Grade Operator: All finish grade work regardless of equipment used, and all equipment with a rating more than 65 HP.

GROUP 2: Landscape Operator up to 65 HP: All equipment with a manufacturer's rating of 65 HP or less except equipment covered by Group 1 or Group 3. The following equipment shall be included except when used for finish work as long as manufacturer's rating is 65 HP or less: A-Frame and Winch Truck, Backhoe, Forklift, Hydragraphic Seeder Machine, Roller, Rubber-Tired and Track Earthmoving Equipment, Skiploader, Straw Blowers, and Trencher 31 HP up to 65 HP.

GROUP 3: Landscae Utility Operator: Small Rubber-Tired Tractor, Trencher Under 31 HP.

AREA DESCRIPTIONS:

AREA 1: ALAMEDA, BUTTE, CONTRA COSTA, KINGS, MARIN, MERCED, NAPA, SACRAMENTO, SAN BENITO, SAN FRANCISCO, SAN JOAQUIN, SAN MATEO, SANTA CLARA, SANTA CRUZ, SOLANO, STANISLAUS, SUTTER, YOLO, AND YUBA COUNTIES

AREA 2 - MODOC COUNTY

THE REMAINING COUNTIES ARE SPLIT BETWEEN AREA 1 AND AREA 2 AS NOTED BELOW:

ALPINE COUNTY:
Area 1: Northernmost part
Area 2: Remainder

CALAVERAS COUNTY:
Area 1: Except Eastern part
Area 2: Eastern part

COLUSA COUNTY:
Area 1: Eastern part
Area 2: Remainder

DEL NORTE COUNTY:
Area 1: Extreme Southwestern corner
Area 2: Remainder

ELDORADO COUNTY:
Area 1: North Central part
Area 2: Remainder

FRESNO COUNTY
Area 1: Except Eastern part
Area 2: Eastern part

GLENN COUNTY:
Area 1: Eastern part
Area 2: Remainder

HUMBOLDT COUNTY:
Area 1: Except Eastern and Southwestern parts
Area 2: Remainder

LAKE COUNTY:
Area 1: Southern part
Area 2: Remainder

LASSEN COUNTY:
Area 1: Western part along the Southern portion of border with Shasta County
Area 2: Remainder

MADERA COUNTY
Area 1: Remainder
Area 2: Eastern part

MARIPOSA COUNTY
Area 1: Remainder
Area 2: Eastern part

MENDOCINO COUNTY:
Area 1: Central and Southeastern parts
Area 2: Remainder

MONTEREY COUNTY
Area 1: Remainder
Area 2: Southwestern part

NEVADA COUNTY:
Area 1: All but the Northern portion along the border of Sierra County
Area 2: Remainder

PLACER COUNTY:
Area 1: All but the Central portion
Area 2: Remainder

PLUMAS COUNTY:
Area 1: Western portion

Area 2: Remainder

SHASTA COUNTY:
Area 1: All but the Northeastern corner
Area 2: Remainder

SIERRA COUNTY:
Area 1: Western part
Area 2: Remainder

SISKIYOU COUNTY:
Area 1: Central part
Area 2: Remainder

SONOMA COUNTY:
Area 1: All but the Northwestern corner
Area 2: Reaminder

TEHAMA COUNTY:
Area 1: All but the Western border with mendocino & Trinity Counties
Area 2: Remainder

TRINITY COUNTY:
Area 1: East Central part and the Northeaster border with Shasta County
Area 2: Remainder

TULARE COUNTY;
Area 1: Remainder
Area 2: Eastern part

TUOLUMNE COUNTY:
Area 1: Remainder
Area 2: Eastern Part

IRON0377-002 07/01/2013

	Rates	Fringes
Ironworkers:		
Fence Erector	$ 26.58	17.74
Ornamental, Reinforcing and Structural	$ 33.00	26.30

PREMIUM PAY:

$6.00 additional per hour at the following locations:

China Lake Naval Test Station, Chocolate Mountains Naval Reserve-Niland,
Edwards AFB, Fort Irwin Military Station, Fort Irwin Training Center-Goldstone, San Clemente Island, San Nicholas Island, Susanville Federal Prison, 29 Palms - Marine Corps, U.S. Marine Base - Barstow, U.S. Naval Air Facility - Sealey, Vandenberg AFB

$4.00 additional per hour at the following locations:

Army Defense Language Institute - Monterey, Fallon Air Base,

Naval Post Graduate School - Monterey, Yermo Marine Corps Logistics Center

$2.00 additional per hour at the following locations:

Port Hueneme, Port Mugu, U.S. Coast Guard Station - Two Rock

LABO0067-002 12/01/2012

AREA "A" - ALAMEDA, CONTRA COSTA, MARIN, SAN FRANCISCO, SAN MATEO AND SANTA CLARA COUNTIES

AREA "B" - ALPINE, AMADOR, BUTTE, CALAVERAS, COLUSA, DEL NORTE, EL DORADO, FRESNO, GLENN, HUMBOLDT, KINGS, LAKE, LASSEN, MADERA, MARIPOSA, MENDOCINO, MERCED, MODOC, MONTEREY, NAPA, NEVADA, PLACER, PLUMAS, SACRAMENTO, SAN BENITO, SAN JOAQUIN, SANTA CRUZ, SHASTA, SIERRA, SISKIYOU, SOLANO, SONOMA, STANISLAUS, SUTTER, TEHAMA, TRINITY, TULARE, TUOLUMNE, YOLO AND YUBA COUNTIES

	Rates	Fringes
Asbestos Removal Laborer		
Areas A & B	$ 19.06	8.62
LABORER (Lead Removal)		
Area A	$ 36.25	9.19
Area B	$ 35.25	9.19

ASBESTOS REMOVAL-SCOPE OF WORK: Site mobilization; initial site clean-up; site preparation; removal of asbestos-containing materials from walls and ceilings; or from pipes, boilers and mechanical systems only if they are being scrapped; encapsulation, enclosure and disposal of asbestos-containing materials by hand or with equipment or machinery; scaffolding; fabrication of temporary wooden barriers; and assembly of decontamination stations.

LABO0067-006 06/28/2010

AREA "A" - ALAMEDA, CONTRA COSTA, MARIN, SAN FRANCISCO, SAN MATEO AND SANTA CLARA COUNTIES

AREA "B" - ALPINE, AMADOR, BUTTE, CALAVERAS, COLUSA, EL DORADO, FRESNO, GLENN, KINGS, LASSEN, MADERA, MARIPOSA, MERCED, MODOC, MONTEREY, NAPA, NEVADA, PLACER, PLUMAS, SACRAMENTO, SAN BENITO, SAN JOAQUIN, SANTA CRUZ, SHASTA, SIERRA, SISKIYOU, SOLANO, SONOMA, STANISLAUS, SUTTER, TEHAMA, TRINITY, TULARE, TUOLUMNE, YOLO AND YUBA COUNTIES

	Rates	Fringes
Laborers: (CONSTRUCTION CRAFT LABORERS - AREA A:)		
Construction Specialist Group	$ 27.84	15.82

GROUP 1.....$ 27.14 15.82
GROUP 1-a.....$ 27.36 15.82
GROUP 1-c.....$ 27.19 15.82
GROUP 1-e.....$ 27.69 15.82
GROUP 1-f.....$ 27.72 15.82
GROUP 1-g (Contra Costa
County).....$ 27.34 15.82
GROUP 2.....$ 26.99 15.82
GROUP 3.....$ 26.89 15.82
GROUP 4.....$ 20.58 15.82
See groups 1-b and 1-d under laborer classifications.
Laborers: (CONSTRUCTION CRAFT
LABORERS - AREA B:)
Construction Specialist
Group.....$ 26.84 15.82
GROUP 1.....$ 26.14 15.82
GROUP 1-a.....$ 26.36 15.82
GROUP 1-c.....$ 26.19 15.82
GROUP 1-e.....$ 26.69 15.82
GROUP 1-f.....$ 26.72 15.82
GROUP 2.....$ 25.99 15.82
GROUP 3.....$ 25.89 15.82
GROUP 4.....$ 19.58 15.82
See groups 1-b and 1-d under laborer classifications.
Laborers: (GUNITE - AREA A:)
GROUP 1.....$ 28.10 15.82
GROUP 2.....$ 27.60 15.82
GROUP 3.....$ 27.60 15.82
GROUP 4.....$ 27.60 15.82
Laborers: (GUNITE - AREA B:)
GROUP 1.....$ 27.10 15.82
GROUP 2.....$ 26.60 15.82
GROUP 3.....$ 26.01 15.82
GROUP 4.....$ 25.89 15.82
Laborers: (WRECKING - AREA A:)
GROUP 1.....$ 27.14 15.82
GROUP 2.....$ 26.99 15.82
Laborers: (WRECKING - AREA B:)
GROUP 1.....$ 26.14 15.82
GROUP 2.....$ 25.99 15.82
Landscape Laborer (GARDENERS,
HORTICULTURAL & LANDSCAPE
LABORERS - AREA A:)
(1) New Construction.....$ 26.89 15.82
(2) Establishment Warranty
Period.....$ 20.58 15.82
Landscape Laborer (GARDENERS,
HORTICULURAL & LANDSCAPE
LABORERS - AREA B:)
(1) New Construction.....$ 25.89 15.82
(2) Establishment Warranty
Period.....$ 19.58 15.82

FOOTNOTES:
Laborers working off or with or from bos'n chairs, swinging scaffolds, belts shall receive $0.25 per hour above the applicable wage rate. This shall not apply to workers entitled to receive the wage rate set forth in Group 1-a below.

LABORER CLASSIFICATIONS

CONSTRUCTION SPECIALIST GROUP: Asphalt ironer and raker; Chainsaw; Laser beam in connection with laborers' work; Cast-in- place manhole form setter; Pressure pipelayer; Davis trencher - 300 or similar type (and all small trenchers); Blaster; Diamond driller; Multiple unit drill; Hydraulic drill

GROUP 1: Asphalt spreader boxes (all types); Barko, Wacker and similar type tampers; Buggymobile; Caulker, bander, pipewrapper, conduit layer, plastic pipelayer; Certified hazardous waste worker including Leade Abatement; Compactors of all types; Concrete and magnesite mixer, 1/2 yd. and under; Concrete pan work; Concrete sander; Concrete saw; Cribber and/or shoring; Cut granite curb setter; Dri-pak-it machine; Faller, logloader and bucker; Form raiser, slip forms; Green cutter; Headerboard, Hubsetter, aligner, by any method; High pressure blow pipe (1-1/2" or over, 100 lbs. pressure/over); Hydro seeder and similar type; Jackhammer operator; Jacking of pipe over 12 inches; Jackson and similar type compactor; Kettle tender, pot and worker applying asphalt, lay-kold, creosote, lime, caustic and similar type materials (applying means applying, dipping or handling of such materials); Lagging, sheeting, whaling, bracing, trenchjacking, lagging hammer; Magnesite, epoxyresin, fiberglass, mastic worker (wet or dry); No joint pipe and stripping of same, including repair of voids; Pavement breaker and spader, including tool grinder; Perma curb; Pipelayer (including grade checking in connection with pipelaying); Precast-manhole setter; Pressure pipe tester; Post hole digger, air, gas and electric; Power broom sweeper; Power tampers of all types (except as shown in Group 2); Ram set gun and stud gun; Riprap stonepaver and rock-slinger, including placing of sacked concrete and/or sand (wet or dry) and gabions and similar type; Rotary scarifier or multiple head concrete chipping scarifier; Roto and Ditch Witch; Rototiller; Sandblaster, pot, gun, nozzle operators; Signalling and rigging; Tank cleaner; Tree climber; Turbo blaster; Vibrascreed, bull float in connection with laborers' work; Vibrator; Hazardous waste worker (lead removal); Asbestos and mold removal worker

GROUP 1-a: Joy drill model TWM-2A; Gardner-Denver model DH143 and similar type drills; Track driller; Jack leg driller; Wagon driller; Mechanical drillers, all types regardless of type or method of power; Mechanical pipe layers, all types regardless of type or method of power; Blaster and powder; All work of loading, placing and blasting of all powder and explosives of whatever type regardless of method used for such loading and placing; High scalers (including drilling of same); Tree topper; Bit grinder

GROUP 1-b: Sewer cleaners shall receive $4.00 per day above Group 1 wage rates. "Sewer cleaner" means any worker who handles or comes in contact with raw sewage in small

diameter sewers. Those who work inside recently active, large diameter sewers, and all recently active sewer manholes shal receive $5.00 per day above Group 1 wage rates.

GROUP 1-c: Burning and welding in connection with laborers' work; Synthetic thermoplastics and similar type welding

GROUP 1-d: Maintenance and repair track and road beds. All employees performing work covered herein shall receive $ .25 per hour above their regular rate for all work performed on underground structures not specifically covered herein. This paragraph shall not be construed to apply to work below ground level in open cut. It shall apply to cut and cover work of subway construction after the temporary cover has been placed.

GROUP 1-e: Work on and/or in bell hole footings and shafts thereof, and work on and in deep footings. (A deep footing is a hole 15 feet or more in depth.) In the event the depth of the footing is unknown at the commencement of excavation, and the final depth exceeds 15 feet, the deep footing wage rate would apply to all employees for each and every day worked on or in the excavation of the footing from the date of inception.

GROUP 1-f: Wire winding machine in connection with guniting or shot crete

GROUP 1-g, CONTRA COSTA COUNTY: Pipelayer (including grade checking in connection with pipelaying); Caulker; Bander; Pipewrapper; Conduit layer; Plastic pipe layer; Pressure pipe tester; No joint pipe and stripping of same, including repair of voids; Precast manhole setters, cast in place manhole form setters

GROUP 2: Asphalt shoveler; Cement dumper and handling dry cement or gypsum; Choke-setter and rigger (clearing work); Concrete bucket dumper and chute; Concrete chipping and grinding; Concrete laborer (wet or dry); Driller tender, chuck tender, nipper; Guinea chaser (stake), grout crew; High pressure nozzle, adductor; Hydraulic monitor (over 100 lbs. pressure); Loading and unloading, carrying and hauling of all rods and materials for use in reinforcing concrete construction; Pittsburgh chipper and similar type brush shredders; Sloper; Single foot, hand-held, pneumatic tamper; All pneumatic, air, gas and electric tools not listed in Groups 1 through 1-f; Jacking of pipe - under 12 inches

GROUP 3: Construction laborers, including bridge and general laborer; Dump, load spotter; Flag person; Fire watcher; Fence erector; Guardrail erector; Gardener, horticultural and landscape laborer; Jetting; Limber, brush loader and piler; Pavement marker (button setter); Maintenance, repair track and road beds; Streetcar and railroad construction track laborer; Temporary air and water lines, Victaulic or similar; Tool room attendant (jobsite only)

GROUP 4: Final clean-up work of debris, grounds and building

including but not limited to: street cleaner; cleaning and washing windows; brick cleaner (jobsite only); material cleaner (jobsite only). The classification "material cleaner" is to be utilized under the following conditions:
A: at demolition site for the salvage of the material.
B: at the conclusion of a job where the material is to be salvaged and stocked to be reused on another job.
C: for the cleaning of salvage material at the jobsite or temporary jobsite yard.

The material cleaner classification should not be used in the performance of "form stripping, cleaning and oiling and moving to the next point of erection".

GUNITE LABORER CLASSIFICATIONS

GROUP 1: Structural Nozzleman

GROUP 2: Nozzleman, Gunman, Potman, Groundman

GROUP 3: Reboundman

GROUP 4: Gunite laborer

WRECKING WORK LABORER CLASSIFICATIONS

GROUP 1: Skilled wrecker (removing and salvaging of sash, windows and materials)

GROUP 2: Semi-skilled wrecker (salvaging of other building materials)

LABO0185-002 07/01/2013

ALPINE, AMADOR, BUTTE, COLUSA, EL DORADO, GLENN, LASSEN, MODOC, NEVADA, PLACER, PLUMAS, SACRAMENTO, SHASTA, SIERRA, SISKIYOU, SUTTER, TEHAMA, TRINITY, YOLO AND YUBA COUNTIES

	Rates	Fringes
LABORER		
Mason Tender-Brick	$ 31.52	16.53

LABO0185-005 07/01/2013

ALPINE, AMADOR, BUTTE, COLUSA, EL DORADO, GLENN, LASSEN, MODOC, NEVADA, PLACER, PLUMAS, SACRAMENTO, SHASTA, SIERRA, SISKIYOU, SUTTER, TEHAMA, TRINITY, YOLO AND YUBA COUNTIES

	Rates	Fringes
Tunnel and Shaft Laborers:		
GROUP 1	$ 34.10	16.53

GROUP 2	$ 33.87	16.53
GROUP 3	$ 33.62	16.53
GROUP 4	$ 33.17	16.53
GROUP 5	$ 32.63	16.53
Shotcrete Specialist	$ 36.12	16.53

TUNNEL AND SHAFT CLASSIFICATIONS

GROUP 1: Diamond driller; Groundmen; Gunite and shotcrete nozzlemen

GROUP 2: Rodmen; Shaft work & raise (below actual or excavated ground level)

GROUP 3: Bit grinder; Blaster, driller, powdermen, heading; Cherry pickermen - where car is lifted; Concrete finisher in tunnel; Concrete screedman; Grout pumpman and potman; Gunite & shotcrete gunman & potman; Headermen; High pressure nozzleman; Miner - tunnel, including top and bottom man on shaft and raise work; Nipper; Nozzleman on slick line; Sandblaster - potman, Robotic Shotcrete Placer, Segment Erector, Tunnel Muck Hauler, Steel Form raiser and setter; Timberman, retimberman (wood or steel or substitute materials therefore); Tugger (for tunnel laborer work); Cable tender; Chuck tender; Powderman - primer house

GROUP 4: Vibrator operator, pavement breaker; Bull gang - muckers, trackmen; Concrete crew - includes rodding and spreading, Dumpmen (any method)

GROUP 5: Grout crew; Reboundman; Swamper/ Brakeman

LABO0261-002 07/01/2009

MARIN COUNTY

	Rates	Fringes
LABORER (TRAFFIC CONTROL/LANE CLOSURE)		
Escort Driver, Flag Person	$ 26.89	14.93
Traffic Control Person I	$ 27.19	14.93
Traffic Control Person II	$ 24.69	14.93

TRAFFIC CONTROL PERSON I: Layout of traffic control, crash cushions, construction area and roadside signage.

TRAFFIC CONTROL PERSON II: Installation and removal of temporary/permanent signs, markers, delineators and crash cushions.

LABO0261-004 07/01/2013

MARIN COUNTY

	Rates	Fringes
Tunnel and Shaft Laborers:		

GROUP 1	$ 34.10	16.53
GROUP 2	$ 33.87	16.53
GROUP 3	$ 33.62	16.53
GROUP 4	$ 33.17	16.53
GROUP 5	$ 32.63	16.53
Shotcrete Specialist	$ 36.12	16.53

TUNNEL AND SHAFT CLASSIFICATIONS

GROUP 1: Diamond driller; Groundmen; Gunite and shotcrete nozzlemen

GROUP 2: Rodmen; Shaft work & raise (below actual or excavated ground level)

GROUP 3: Bit grinder; Blaster, driller, powdermen, heading; Cherry pickermen - where car is lifted; Concrete finisher in tunnel; Concrete screedman; Grout pumpman and potman; Gunite & shotcrete gunman & potman; Headermen; High pressure nozzleman; Miner - tunnel, including top and bottom man on shaft and raise work; Nipper; Nozzleman on slick line; Sandblaster - potman, Robotic Shotcrete Placer, Segment Erector, Tunnel Muck Hauler, Steel Form raiser and setter; Timberman, retimberman (wood or steel or substitute materials therefore); Tugger (for tunnel laborer work); Cable tender; Chuck tender; Powderman - primer house

GROUP 4: Vibrator operator, pavement breaker; Bull gang - muckers, trackmen; Concrete crew - includes rodding and spreading, Dumpmen (any method)

GROUP 5: Grout crew; Reboundman; Swamper/ Brakeman

LABO0261-007 07/01/2013

MARIN COUNTY

	Rates	Fringes
LABORER		
Mason Tender-Brick	$ 32.77	16.53

LABO0324-004 07/01/2009

NAPA, SOLANO, AND SONOMA, COUNTIES

	Rates	Fringes
LABORER (TRAFFIC CONTROL/LANE CLOSURE)		
Escort Driver, Flag Person	$ 25.89	14.93
Traffic Control Person I	$ 26.19	14.93
Traffic Control Person II	$ 23.69	14.93

TRAFFIC CONTROL PERSON I: Layout of traffic control, crash cushions, construction area and roadside signage.

TRAFFIC CONTROL PERSON II: Installation and removal of temporary/permanent signs, markers, delineators and crash

cushions.

LABO0324-008 07/01/2013

NAPA, SOLANO, AND SONOMA COUNTIES

	Rates	Fringes
Tunnel and Shaft Laborers:		
GROUP 1	$ 34.10	16.53
GROUP 2	$ 33.87	16.53
GROUP 3	$ 33.62	16.53
GROUP 4	$ 33.17	16.53
GROUP 5	$ 32.63	16.53
Shotcrete Specialist	$ 36.12	16.53

TUNNEL AND SHAFT CLASSIFICATIONS

GROUP 1: Diamond driller; Groundmen; Gunite and shotcrete nozzlemen

GROUP 2: Rodmen; Shaft work & raise (below actual or excavated ground level)

GROUP 3: Bit grinder; Blaster, driller, powdermen, heading; Cherry pickermen - where car is lifted; Concrete finisher in tunnel; Concrete screedman; Grout pumpman and potman; Gunite & shotcrete gunman & potman; Headermen; High pressure nozzleman; Miner - tunnel, including top and bottom man on shaft and raise work; Nipper; Nozzleman on slick line; Sandblaster - potman, Robotic Shotcrete Placer, Segment Erector, Tunnel Muck Hauler, Steel Form raiser and setter; Timberman, retimberman (wood or steel or substitute materials therefore); Tugger (for tunnel laborer work); Cable tender; Chuck tender; Powderman - primer house

GROUP 4: Vibrator operator, pavement breaker; Bull gang - muckers, trackmen; Concrete crew - includes rodding and spreading, Dumpmen (any method)

GROUP 5: Grout crew; Reboundman; Swamper/ Brakeman

LABO0324-010 07/01/2013

NAPA, SOLANO AND SONOMA COUNTIES

	Rates	Fringes
LABORER (Brick)		
Mason Tender-Brick	$ 31.95	16.53

LABO1414-005 08/07/2013

	Rates	Fringes
Plasterer tender	$ 30.00	16.36

Work on a swing stage scaffold: $1.00 per hour additional.

PAIN0016-004 01/01/2013

MARIN, NAPA, SOLANO & SONOMA COUNTIES

	Rates	Fringes
Painters:.....	$ 33.86	20.26

PREMIUMS:
EXOTIC MATERIALS - $0.75 additional per hour.
SPRAY WORK: - $0.50 additional per hour.
INDUSTRIAL PAINTING - $0.25 additional per hour
[Work on industrial buildings used for the manufacture and processing of goods for sale or service; steel construction (bridges), stacks, towers, tanks, and similar structures]

HIGH WORK:
over 50 feet - $2.00 per hour additional
100 to 180 feet - $4.00 per hour additional
Over 180 feet - $6.00 per houir additional

PAIN0016-005 01/01/2013

ALPINE, BUTTE, COLUSA, EL DORADO (west of the Sierra Nevada Mountains), GLENN, LASSEN (west of Hwy. 395, excluding Honey Lake); MARIN, MODOC, NAPA, NEVADA (west of the Sierra Nevada Mountains), PLACER (west of the Sierra Nevada Mountains), PLUMAS, SACRAMENTO, SHASTA, SIERRA (west of the Sierra Nevada Mountains), SISKIYOU, SOLANO, SONOMA, SUTTER, TEHAMA, TRINITY, YOLO AND YUBA COUNTIES

	Rates	Fringes
DRYWALL FINISHER/TAPER.....	$ 36.24	18.67

PAIN0016-007 01/01/2013

ALPINE, AMADOR, BUTTE, COLUSA. EL DORADO (west of the Sierra Nevada Mountains), GLENN, LASSEN (west of Highway 395, excluding Honey Lake), MODOC, NEVADA (west of the Sierra Nevada Mountains), PLACER (west of the Sierra Nevada Mountains), PLUMAS, SACRAMENTO, SHASTA, SIERRA (west of the Sierra Nevada Mountains), SISKIYOU, SUTTER, TEHAMA, TRINITY, YOLO & YUBA COUNTIES

	Rates	Fringes
Painters:.....	$ 29.06	15.98

SPRAY/SANDBLAST: $0.50 additional per hour.
EXOTIC MATERIALS: $1.00 additional per hour.
HIGH TIME: Over 50 ft above ground or water level $2.00 additional per hour. 100 to 180 ft above ground or water level $4.00 additional per hour. Over 180 ft above ground or water level $6.00 additional per hour.

PAIN0016-008 01/01/2013

MARIN, NAPA, SOLANO AND SONOMA COUNTIES

	Rates	Fringes
SOFT FLOOR LAYER.....	$ 44.87	17.98

PAIN0169-004 01/01/2013

MARIN , NAPA & SONOMA COUNTIES; SOLANO COUNTY (west of a line defined as follows: Hwy. 80 corridor beginning at the City of Fairfield, including Travis Air Force Base and Suisun City; going north of Manakas Corner Rd., continue north on Suisun Valley Rd. to the Napa County line; Hwy. 80 corridor south on Grizzly Island Rd. to the Grizzly Island Management area)

	Rates	Fringes
GLAZIER.....	$ 41.88	21.59

---

* PAIN0567-001 07/01/2013

EL DORADO COUNTY (east of the Sierra Nevada Mountains); LASSEN COUNTY (east of Highway 395, beginning at Stacey and including Honey Lake); NEVADA COUNTY (east of the Sierra Nevada Mountains); PLACER COUNTY (east of the Sierra Nevada Mountains); AND SIERRA COUNTY (east of the Sierra Nevada Mountains)

	Rates	Fringes
Painters:		
Brush and Roller.....	$ 23.30	10.19
Spray Painter & Paperhanger.	$ 24.15	10.19

PREMIUMS:
Special Coatings (Brush), and Sandblasting = $0.50/hr
Special Coatings (Spray), and Steeplejack = $1.00/hr
Special Coating Spray Steel = $1.25/hr
Swing Stage = $2.00/hr

*A special coating is a coating that requires the mixing of 2 or more products.

PAIN0567-007 07/01/2013

EL DORADO COUNTY (east of the Sierra Nevada Mountains); LASSEN COUNTY (east of Highway 395, beginning at Stacey and including Honey Lake); NEVADA COUNTY (east of the Sierra Nevada Mountains); PLACER COUNTY (east of the Sierra Nevada Mountains) AND SIERRA COUNTY (east of the Sierra Nevada Mountains)

	Rates	Fringes

SOFT FLOOR LAYER.....$ 25.40 11.49

PAIN0567-010 07/01/2013

EL DORADO COUNTY (east of the Sierra Nevada Mountains); LASSEN COUNTY (east of Highway 395, beginning at Stacey and including Honey Lake); NEVADA COUNTY (east of the Sierra Nevada Mountains); PLACER COUNTY (east of the Sierra Nevada Mountains); AND SIERRA COUNTY (east of the Sierra Nevada Mountains)

	Rates	Fringes
Drywall		
(1) Taper	$ 27.07	11.14
(2) Steeplejack - Taper, over 40 ft with open space below	$ 28.57	11.14

PAIN0767-004 01/01/2013

ALPINE, AMADOR, BUTTE, COLUSA, EL DORADO, GLENN, LASSEN, MODOC, NEVADA, PLACER, PLUMAS, SACRAMENTO, SHASTA, SIERRA, SISKIYOU, SOLANO (Remainder), SUTTER, TEHAMA, TRINITY, YOLO, YUBA

	Rates	Fringes
GLAZIER	$ 32.24	19.88

PAID HOLIDAYS: New Year's Day, Martin Luther King, Jr. Day, President's Day, Memorial Day, Independence Day, Labor Day, Veteran's Day, Thanksgiving Day, and Christmas Day.

Employee rquired to wear a body harness shall receive $1.50 per hour above the basic hourly rate at any elevation.

PAIN1176-001 07/01/2013

HIGHWAY IMPROVEMENT

	Rates	Fringes
Parking Lot Striping/Highway Marking:		
GROUP 1	$ 28.27	11.65
GROUP 2	$ 28.60	11.65
GROUP 3	$ 26.96	11.65

CLASSIFICATIONS

GROUP 1: Striper: Layout and application of painted traffic stripes and marking; hot thermo plastic; tape, traffic stripes and markings

GROUP 2: Gamecourt & Playground Installer

GROUP 3: Protective Coating, Pavement Sealing

PAIN1237-001 01/01/2013

ALPINE; COLUSA; EL DORADO (west of the Sierra Nevada Mountains); GLENN; LASSEN (west of Highway 395, beginning at Stacey and including Honey Lake); MODOC; NEVADA (west of the Sierra Nevada Mountains); PLACER (west of the Sierra Nevada Mountains); PLUMAS; SACRAMENTO; SHASTA; SIERRA (west of the Sierra Nevada Mountains); SISKIYOU; SUTTER; TEHAMA; TRINITY; YOLO AND YUBA COUNTIES

	Rates	Fringes
SOFT FLOOR LAYER.....	$ 28.25	16.73

PLAS0300-003 07/01/2009

	Rates	Fringes
PLASTERER		
AREA 295: Alpine, Amador, Butte, Colusa, El Dorado, Glenn, Lassen, Modoc, Nevada, Placer, Plumas, Sacramento, Shasta, Sierra, Siskiyou, Solano, Sutter, Tehema, Trinity, Yolo & Yuba Counties.....	$ 32.82	15.10
AREA 355: Marin, Napa & Sonoma Counties.....	$ 32.82	15.30

PLAS0300-005 06/28/2010

	Rates	Fringes
CEMENT MASON/CONCRETE FINISHER...	$ 28.65	18.56

PLUM0038-002 07/01/2013

MARIN AND SONOMA COUNTIES

	Rates	Fringes
PLUMBER (Plumber, Steamfitter, Refrigeration Fitter)		
(1) Work on wooden frame structures 5 stories or less excluding hgih-rise buildings and commercial work such as hospitals, prisons, hotels, schools, casinos, wastewater treatment plants, and resarch facilities as well as refrigeration pipefitting, service and repair work - MARKET		

RECOVERY RATE.....$ 62.00 42.39
(2) All other work - NEW
CONSTRUCTION RATE.....$ 62.00 42.39

PLUM0038-006 07/01/2013

MARIN & SONOMA COUNTIES

	Rates	Fringes
Landscape/Irrigation Fitter (Underground/Utility Fitter).....	$ 52.70	31.45

PLUM0228-001 07/01/2013

BUTTE, COLUSA, GLENN, LASSEN, MODOC, PLUMAS, SHASTA, SIERRA, SISKIYOU, SUTTER, TEHAMA, TRINITY & YUBA COUNTIES

	Rates	Fringes
PLUMBER.....	$ 36.70	24.69

PLUM0343-001 07/01/2013

NAPA AND SOLANO COUNTIES

	Rates	Fringes
PLUMBER/PIPEFITTER		
Light Commercial.....	$ 30.60	19.40
All Other Work.....	$ 47.50	28.20

DEFINITION OF LIGHT COMMERICIAL:
Work shall include strip shopping centers, office buildings, schools and other commercial structures which the total plumbing bid does not exceed Two Hundred and Fifty Thousand ($250,000) and the total heating and cooling does not exceed Two Hundred Fifty Thousand ($250,000); or Any projects bid in phases shall not qualify unless the total project is less than Two Hundred Fifty Thousand ($250,000) for the plumbing bid; and Two Hundred Fifty Thousand ($250,000) for the heating and cooling bid. Excluded are hospitals, jails, institutions and industrial projects, regardless size of the project

FOOTNOTES: While fitting galvanized material: $.75 per hour additional. Work from trusses, temporary staging, unguarded structures 35' from the ground or water: $.75 per hour additional. Work from swinging scaffolds, boatswains chairs or similar devices: $.75 per hour additional.

PLUM0350-001 01/01/2011

EL DORADO COUNTY (Lake Tahoe area only); NEVADA COUNTY (Lake Tahoe area only); AND PLACER COUNTY (Lake Tahoe area only)

	Rates	Fringes

PLUMBER/PIPEFITTER.....$ 34.60 10.50

PLUM0355-001 07/01/2013

ALPINE, AMADOR, BUTTE, COLUSA, EL DORADO, GLENN, LASSEN, MODOC, NAPA, NEVADA, PLACER, PLUMAS, SACRAMENTO, SHASTA, SIERRA, SISKIYOU, SOLANO, SUTTER, TEHAMA, TRINITY, YOLO, AND YUBA COUNTIES

	Rates	Fringes
Underground Utility Worker /Landscape Fitter	$ 28.55	8.30

PLUM0442-003 07/01/2013

AMADOR (South of San Joaquin River) and ALPINE COUNTIES

	Rates	Fringes
PLUMBER	$ 37.00	22.59

PLUM0447-001 07/01/2013

AMADOR (north of San Joaquin River), EL DORADO (excluding Lake Tahoe area), NEVADA (excluding Lake Tahoe area); PLACER (excluding Lake Tahoe area), SACRAMENTO AND YOLO COUNTIES

	Rates	Fringes
PLUMBER/PIPEFITTER		
Journeyman	$ 41.77	22.35
Light Commercial Work	$ 32.23	17.22

ROOF0081-006 08/01/2011

MARIN, NAPA, SOLANO AND SONOMA COUNTIES

	Rates	Fringes
Roofer	$ 33.16	10.90

ROOF0081-007 08/01/2012

ALPINE, BUTTE, COLUSA, EL DORADO, GLENN,LASSEN, MODOC, NEVADA, PLACER, PLUMAS, SACRAMENTO, SHASTA, SIERRA, SISKIYOU, SUTTER, TEHAMA, TRINITY, YOLO, AND YUBA COUNTIES

	Rates	Fringes
Roofer	$ 32.33	11.97

SFCA0483-003 01/01/2013

MARIN, NAPA, SOLANO AND SONOMA COUNTIES

	Rates	Fringes
SPRINKLER FITTER (Fire Sprinklers)	$ 52.16	24.87

SFCA0669-003 07/01/2013

ALPINE, BUTTE, COLUSA, EL DORADO, GLENN, LASSEN, MODOC, NEVADA, PLACER, PLUMAS, SACRAMENTO, SHASTA, SIERRA, SISKIYOU, SUTTER, TEHAMA, TRINITY, YOLO AND YUBA COUNTIES

	Rates	Fringes
SPRINKLER FITTER	$ 34.19	19.37

SHEE0104-006 07/01/2013

MARIN, NAPA, SOLANO SONOMA & TRINITY COUNTIES

	Rates	Fringes
Sheet Metal Worker		
Mechanical Contracts		
$200,000 or less	$ 51.30	35.96
All other work	$ 52.80	34.46

SHEE0104-009 07/01/2013

AMADOR, COLUSA, EL DORADO, NEVADA, PLACER, SACRAMENTO, SUTTER, YOLO AND YUBA COUNTIES

	Rates	Fringes
SHEET METAL WORKER	$ 38.43	29.31

SHEE0104-010 07/01/2013

AlPINE COUNTY

	Rates	Fringes
SHEET METAL WORKER	$ 35.87	26.88

SHEE0104-011 07/01/2013

BUTTE, COLUSA, EL DORADO, GLENN, LASSEN, MODOC, NEVADA, PLACER, PLUMAS, SACRAMENTO, SHASTA, SIERRA, SISKIYOU, SUTTER, TEHAMA, YOLO AND YUBA COUNTIES

	Rates	Fringes
Sheet Metal Worker (Metal decking and siding only)	$ 38.43	29.31

SHEE0104-014 07/01/2013

MARIN, NAPA, SOLANO, SONOMA AND TRINITY COUNTIES

	Rates	Fringes
SHEET METAL WORKER (Metal Decking and Siding only)	$ 52.80	34.46

SHEE0104-019 07/01/2013

BUTTE, GLENN, LASSEN, MODOC, PLUMAS, SHASTA, SIERRA, SISKIYOU AND TEHAMA COUNTIES

	Rates	Fringes
SHEET METAL WORKER		
Mechanical Jobs $200,000 & under	$ 29.54	27.16
Mechanical Jobs over $200,000	$ 38.43	29.31

TEAM0094-001 07/01/2013

	Rates	Fringes
Truck drivers:		
GROUP 1	$ 27.44	23.69
GROUP 2	$ 27.74	23.69
GROUP 3	$ 28.04	23.69
GROUP 4	$ 28.39	23.69
GROUP 5	$ 28.74	23.69

FOOTNOTES:
Articulated dump truck; Bulk cement spreader (with or without auger); Dumpcrete truck; Skid truck (debris box); Dry pre-batch concrete mix trucks; Dumpster or similar type; Slurry truck: Use dump truck yardage rate.
Heater planer; Asphalt burner; Scarifier burner; Industrial lift truck (mechanical tailgate); Utility and clean-up truck: Use appropriate rate for the power unit or the equipment utilized.

TRUCK DRIVER CLASSIFICATIONS

GROUP 1: Dump trucks, under 6 yds.; Single unit flat rack (2-axle unit); Nipper truck (when flat rack truck is used appropriate flat rack shall apply); Concrete pump truck (when flat rack truck is used appropriate flat rack shall apply); Concrete pump machine; Fork lift and lift jitneys; Fuel and/or grease truck driver or fuel person; Snow buggy; Steam cleaning; Bus or personhaul driver; Escort or pilot car driver; Pickup truck; Teamster oiler/greaser and/or serviceperson; Hook tender (including loading and unloading); Team driver; Tool room attendant (refineries)

GROUP 2: Dump trucks, 6 yds. and under 8 yds.; Transit mixers, through 10 yds.; Water trucks, under 7,000 gals.; Jetting trucks, under 7,000 gals.; Single-unit flat rack (3-axle unit); Highbed heavy duty transport; Scissor truck; Rubber-tired muck car (not self-loaded); Rubber-tired truck

jumbo; Winch truck and "A" frame drivers; Combination winch truck with hoist; Road oil truck or bootperson; Buggymobile; Ross, Hyster and similar straddle carriers; Small rubber-tired tractor

GROUP 3: Dump trucks, 8 yds. and including 24 yds.; Transit mixers, over 10 yds.; Water trucks, 7,000 gals. and over; Jetting trucks, 7,000 gals. and over; Vacuum trucks under 7500 gals. Trucks towing tilt bed or flat bed pull trailers; Lowbed heavy duty transport; Heavy duty transport tiller person; Self- propelled street sweeper with self-contained refuse bin; Boom truck - hydro-lift or Swedish type extension or retracting crane; P.B. or similar type self-loading truck; Tire repairperson; Combination bootperson and road oiler; Dry distribution truck (A bootperson when employed on such equipment, shall receive the rate specified for the classification of road oil trucks or bootperson); Ammonia nitrate distributor, driver and mixer; Snow Go and/or plow

GROUP 4: Dump trucks, over 25 yds. and under 65 yds.; Water pulls - DW 10's, 20's, 21's and other similar equipment when pulling Aqua/pak or water tank trailers; Helicopter pilots (when transporting men and materials); Lowbedk Heavy Duty Transport up to including 7 axles; DW10's, 20's, 21's and other similar Cat type, Terra Cobra, LeTourneau Pulls, Tournorocker, Euclid and similar type equipment when pulling fuel and/or grease tank trailers or other miscellaneous trailers; Vacuum Trucks 7500 gals and over and truck repairman

GROUP 5: Dump trucks, 65 yds. and over; Holland hauler; Low bed Heavy Duty Transport over 7 axles

---

WELDERS - Receive rate prescribed for craft performing operation to which welding is incidental.

==========

Unlisted classifications needed for work not included within the scope of the classifications listed may be added after award only as provided in the labor standards contract clauses (29CFR 5.5 (a) (1) (ii)).

The body of each wage determination lists the classification and wage rates that have been found to be prevailing for the cited type(s) of construction in the area covered by the wage determination. The classifications are listed in alphabetical order of "identifiers" that indicate whether the particular rate is union or non-union.

Union Identifiers

An identifier enclosed in dotted lines beginning with characters other than "SU" denotes that the union classification and rate have found to be prevailing for that classification. Example: PLUM0198-005 07/01/2011. The first four letters , PLUM, indicate the international union and the four-digit number, 0198, that follows indicates the local union number or district council number where applicable , i.e., Plumbers Local 0198. The next number, 005 in the example, is an internal number used in processing the wage determination. The date, 07/01/2011, following these characters is the effective date of the most current negotiated rate/collective bargaining agreement which would be July 1, 2011 in the above example.

Union prevailing wage rates will be updated to reflect any changes in the collective bargaining agreements governing the rates.

0000/9999: weighted union wage rates will be published annually each January.

Non-Union Identifiers

Classifications listed under an "SU" identifier were derived from survey data by computing average rates and are not union rates; however, the data used in computing these rates may include both union and non-union data. Example: SULA2004-007 5/13/2010. SU indicates the rates are not union majority rates, LA indicates the State of Louisiana; 2004 is the year of the survey; and 007 is an internal number used in producing the wage determination. A 1993 or later date, 5/13/2010, indicates the classifications and rates under that identifier were issued as a General Wage Determination on that date.

Survey wage rates will remain in effect and will not change until a new survey is conducted.

WAGE DETERMINATION APPEALS PROCESS

1.) Has there been an initial decision in the matter? This can be:

* an existing published wage determination
* a survey underlying a wage determination
* a Wage and Hour Division letter setting forth a position on a wage determination matter
* a conformance (additional classification and rate) ruling

On survey related matters, initial contact, including requests for summaries of surveys, should be with the Wage and Hour Regional Office for the area in which the survey was conducted because those Regional Offices have responsibility for the Davis-Bacon survey program. If the response from this initial contact is not satisfactory, then the process described in 2.)

and 3.) should be followed.

With regard to any other matter not yet ripe for the formal process described here, initial contact should be with the Branch of Construction Wage Determinations. Write to:

Branch of Construction Wage Determinations
Wage and Hour Division
U.S. Department of Labor
200 Constitution Avenue, N.W.
Washington, DC 20210

2.) If the answer to the question in 1.) is yes, then an interested party (those affected by the action) can request review and reconsideration from the Wage and Hour Administrator (See 29 CFR Part 1.8 and 29 CFR Part 7). Write to:

Wage and Hour Administrator
U.S. Department of Labor
200 Constitution Avenue, N.W.
Washington, DC 20210

The request should be accompanied by a full statement of the interested party's position and by any information (wage payment data, project description, area practice material, etc.) that the requestor considers relevant to the issue.

3.) If the decision of the Administrator is not favorable, an interested party may appeal directly to the Administrative Review Board (formerly the Wage Appeals Board). Write to:

Administrative Review Board
U.S. Department of Labor
200 Constitution Avenue, N.W.
Washington, DC 20210

4.) All decisions by the Administrative Review Board are final.

==========

END OF GENERAL DECISION

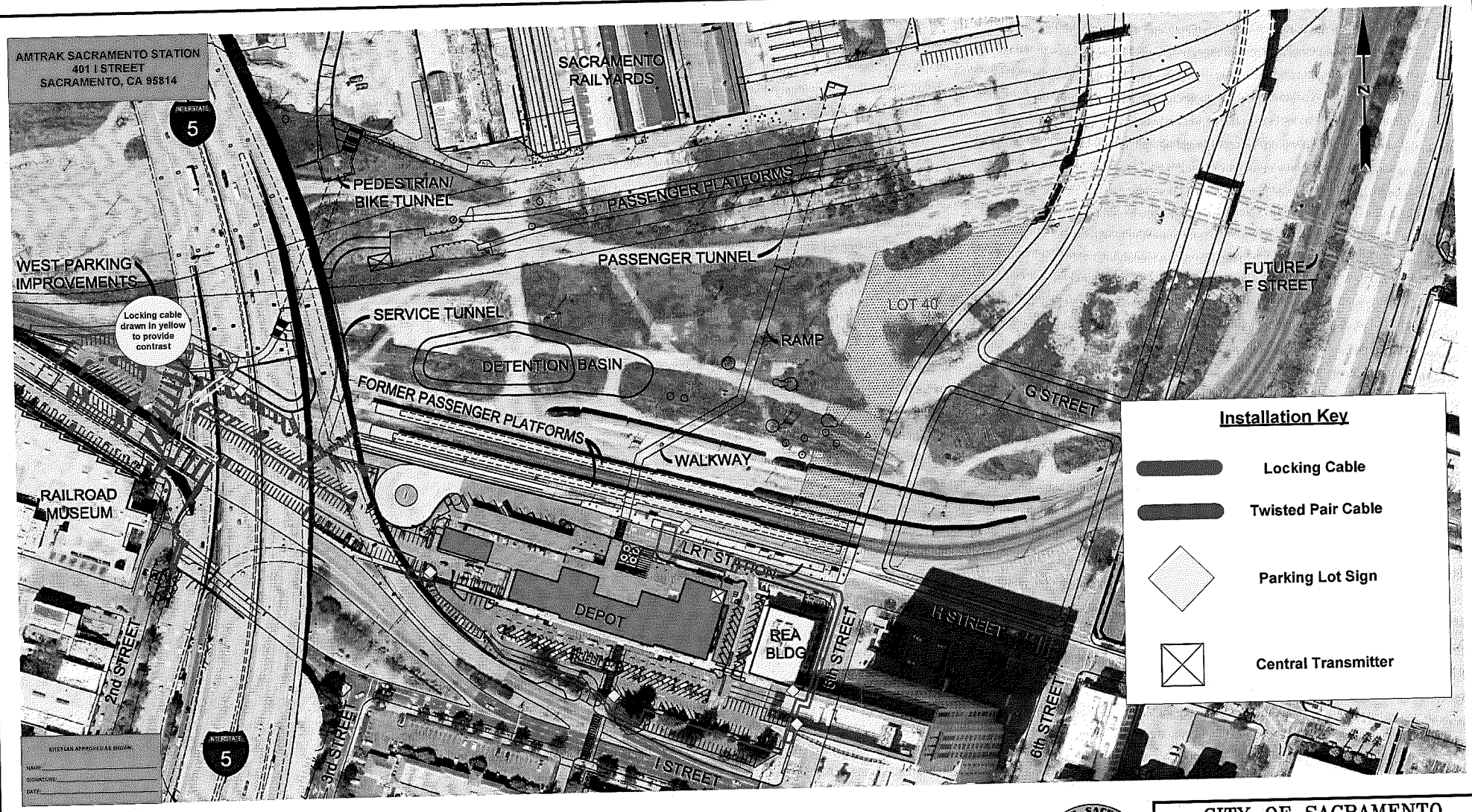

CITY OF SACRAMENTO
DEPARTMENT OF PUBLIC WORKS

SACRAMENTO VALLEY STATION & PARKING FACILITY PROPOSED IMPROVEMENTS

STATE OF CALIFORNIA • DEPARTMENT OF TRANSPORTATION

ENCROACHMENT PERMIT RIDER

TR-0122 (REV 6/1999)

Collected By	Permit No.
	0309NRX0916
Rider Fee Paid	Dist/Co/Rte/PM
$ Exempt	03-SAC-5-23.84/23.9
Date	Rider Number
Mar 14, 2012	0312-NRW0148

TO: City of Sacramento
915 I Street, Room 2000
Sacramento CA 95814
Attn: Marc Lee

(916) 808-7914

, **PERMITTEE**

Ref No. Granite Construction
DP #03116DP0179

In compliance with your request of March 14, 2012 (DATE) we are hereby amending the above numbered encroachment permit as follows

Date of completion extended to: 12/10/2013 NO CHANGE.

Complete pedestrian ramp at the West End of Viaduct, Br. No 24-0069 associated with the parent permit in the city of Sacramento per attached plans.

Contractor shall provide shoring design plans for review and approval prior to construction.

Contractor shall provied a complete SWPPP in binder per the latest Caltrans template for review and approval to the Caltrans stormwater coordinator, Mohammad Asghari prior to construction.

Permittee shall contact State inspector Mali Karimi, Cell (916) 709-1744, SEVEN (7) working days prior to commencing work, to arrange a pre-job meeting. A 24-hour notification before restarting work shall be strictly adhered to. All work shall be conducted and completed to the satisfaction of Caltrans representative. Immediately following completion of the work permitted herein, the Permittee shall fill out and mail the Notice of Completion attached to this Permit.

Except as amended, all other terms and provisions of the original permitshall remain in effect.

NO CALTRANS OVERSIGHT
cc: Mali Karimi, Permits Inspector
Rusty Grout, Maint-Sunrise Region
Mohammad Asghari, Stormwater (530) 632-2612
Eric Fredrickson, Structures Maintenance
~~Granite Construction, DP Contractor~~

APPROVED:
JODY JONES, District Director
BY: Judy McCutty FOR
BRUCE D. CAPAUL, Chief-Encroachment Permits Branch

ADA Notice For individuals with sensory disabilities, this document is available in alternate formats. For information call (916) 653-3657 or TDD (916) 654-3880 or write Records and Forms Management, 1120 N Street, MS-89, Sacramento, CA 95814.

FM 91 1437

Back to Report Table of Contents

PROJECT #: T15029032
PROJECT NAME: West Tunnel Ramps Access
DEPARTMENT: Public Works
DIVISION: Engineering Services

CITY OF SACRAMENTO

PROFESSIONAL SERVICES AGREEMENT FOR ARCHITECTS, LANDSCAPE ARCHITECTS, PROFESSIONAL ENGINEERS, AND PROFESSIONAL LAND SURVEYORS

THIS AGREEMENT is made at Sacramento, California, as of _____, by and between the **CITY OF SACRAMENTO,** a municipal corporation ("CITY"), and

Vali Cooper & Associates
1760 Creekside Oaks Drive, Suite 140, Sacramento, CA 95833
Hank Doll / (916) 826-3038 / Hank.Doll@valicooper.com

("CONTRACTOR"), who agree as follows:

1. **Services.** Subject to the terms and conditions set forth in this Agreement, CONTRACTOR shall provide to CITY the services described in Exhibit A. CONTRACTOR shall provide said services at the time, place, and in the manner specified in Exhibit A. CONTRACTOR shall not be compensated for services outside the scope of Exhibit A unless prior to the commencement of such services: (a) CONTRACTOR notifies CITY and CITY agrees that such services are outside the scope of Exhibit A; (b) CONTRACTOR estimates the additional compensation required for these additional services; and (c) CITY, after notice, approves in writing a Supplemental Agreement specifying the additional services and amount of compensation therefor. CITY shall have no obligations whatsoever under this Agreement and/or any Supplemental Agreement, unless and until this Agreement or any Supplemental Agreement is approved by the Sacramento City Manager or the City Manager's authorized designee, or by the Sacramento City Council, as required by the Sacramento City Code.

2. **Payment.** CITY shall pay CONTRACTOR for services rendered pursuant to this Agreement at the times and in the manner set forth in Exhibit B. The payments specified in Exhibit B shall be the only payments to be made to CONTRACTOR for the services rendered pursuant to this Agreement unless pursuant to Section 1, above, CITY approves additional compensation for additional services. CONTRACTOR shall submit all billings for said services to CITY in the manner specified in Exhibit B, or, if not specified in Exhibit B, according to the usual and customary procedures and practices that CONTRACTOR uses for billing clients similar to CITY.

3. **Facilities and Equipment.** Except as set forth in Exhibit C, CONTRACTOR shall, at its sole cost and expense, furnish all facilities and equipment that may be required for furnishing services pursuant to this Agreement. CITY shall furnish to CONTRACTOR only the facilities and equipment listed in Exhibit C according to any terms and conditions set forth in Exhibit C.

4. **General Provisions.** The General Provisions set forth in Exhibit D, that include indemnity and insurance requirements, are part of this Agreement. In the event of any conflict between the General Provisions and any terms or conditions of any document prepared or provided by CONTRACTOR and made a part of

this Agreement, including without limitation any document relating to the scope of services or payment therefor, the General Provisions shall control over said terms or conditions.

5. **Non-Discrimination in Employee Benefits.** This Agreement is subject to the provisions of Sacramento City Code Chapter 3.54, Non-Discrimination in Employee Benefits by City Contractors. The requirements of Sacramento City Code Chapter 3.54 are summarized in Exhibit E. CONTRACTOR is required to sign the attached Declaration of Compliance (Equal Benefits Ordinance), to assure compliance with these requirements.

6. **Authority.** The person signing this Agreement for CONTRACTOR hereby represents and warrants that he/she is fully authorized to sign this Agreement on behalf of CONTRACTOR and to bind CONTRACTOR to the performance of its obligations hereunder.

7. **Exhibits.** All exhibits referred to herein are attached hereto and are by this reference incorporated as if set forth fully herein.

Executed as of the day and year first above stated.

CITY OF SACRAMENTO
A Municipal Corporation

By:_____

Print name: Jerry Way

Title: Director of Public Works

For: John F. Shirey, City Manager

APPROVED AS TO FORM:

_____
City Attorney

ATTEST:

_____
City Clerk

Attachments

Exhibit A - Scope of Service
Exhibit B - Fee Schedule/Manner of Payment
Exhibit C - Facilities/Equipment Provided
Exhibit D - General Provisions
Exhibit E - Non-Discrimination in Employee Benefits

CONTRACTOR:

Vali Cooper & Associates
NAME OF FIRM

68-0284873
Federal I.D. No.

C1825836
State I.D. No.

1007708
City of Sacramento Business Op. Tax Cert. No.

TYPE OF BUSINESS ENTITY *(check one)*:

_____ Individual/Sole Proprietor
_____ Partnership
_X_ Corporation *(may require 2 signatures)*
_____ Limited Liability Company
_____ Other (*please specify:* _____)

_____
Signature of Authorized Person

AGNES E. HEBEL / PRESIDENT
Print Name and Title

_____
Additional Signature *(if required)*

JOHN COOPER, O.D.
Print Name and Title

DECLARATION OF COMPLIANCE
Equal Benefits Ordinance

Name of Contractor: Vali Cooper & Associates

Address: 1760 Creekside Oaks Drive, Suite 140, Sacramento, CA 95833

The above named Contractor ("Contractor") hereby declares and agrees as follows:

1. Contractor has read and understands the Requirements of the Non-Discrimination In Employee Benefits Code (the "Requirements") attached hereto as Exhibit E.

2. As a condition of receiving this Agreement, Contractor agrees to fully comply with the Requirements, as well as any additional requirements that may be specified in the City of Sacramento's Non-Discrimination In Employee Benefits Code codified at Chapter 3.54 of the Sacramento City Code (the "Ordinance").

3. Contractor understands, to the extent that such benefits are not preempted or prohibited by federal or state law, employee benefits covered by the Ordinance are any of the following:

   a. Bereavement Leave
   b. Disability, life, and other types of insurance
   c. Family medical leave
   d. Health benefits
   e. Membership or membership discounts
   f. Moving expenses
   g. Pension and retirement benefits
   h. Vacation
   i. Travel benefits
   j. Any other benefit offered to employees

   Contractor agrees that if Contractor offers any of the above-listed employee benefits, Contractor will offer those benefits, without discrimination between employees with spouses and employees with domestic partners, and without discrimination between the spouses and domestic partners of such employees.

4. Contractor understands that Contractor will not be considered to be discriminating in the provision or application of employee benefits under the following conditions or circumstances:

   a. If the actual cost of providing a benefit to a domestic partner or spouse exceeds the cost of providing the same benefit to a spouse or domestic partner of an employee, Contractor will not be required to provide the benefit, nor shall it be deemed discriminatory, if Contractor requires the employee to pay the monetary difference in order to provide the benefit to the domestic partner or to the spouse.

b. If Contractor is unable to provide a certain benefit, despite taking reasonable measures to do so, if Contractor provides the employee with a cash equivalent Contractor will not be deemed to be discriminating in the application of that benefit.

c. If Contractor provides employee benefits neither to employee's spouses nor to employee's domestic partners.

d. If Contractor provides employee benefits to employees on a basis unrelated to marital or domestic partner status.

e. If Contractor submits written evidence of making reasonable efforts to end discrimination in employee benefits by implementing policies that will be enacted before the first effective date after the first open enrollment process following the date this Agreement is executed by the City of Sacramento ("City"). Contractor understands that any delay in the implementation of such policies may not exceed one (1) year from the date this Agreement is executed by the City, and applies only to those employee benefits for which an open enrollment process is applicable.

f. Until administrative steps can be taken to incorporate nondiscrimination in employee benefits. The time allotted for these administrative steps will apply only to those employee benefits for which administrative steps are necessary and may not exceed three (3) months from the date this Agreement is executed by the City.

g. Until the expiration of a current collective bargaining agreement(s) if employee benefits are governed by such collective bargaining agreement(s).

h. Contractor takes all reasonable measures to end discrimination in employee benefits by either requesting that the union(s) involved agree to reopen the agreement(s) in order for Contractor to take whatever steps are necessary to end discrimination in employee benefits or by ending discrimination in employee benefits without reopening the collective bargaining agreement(s).

i. In the event Contractor cannot end discrimination in employee benefits despite taking all reasonable measures to do so, Contractor provides a cash equivalent to eligible employees for whom employee benefits are not available. Unless otherwise authorized in writing by the City Manager, Contractor understands this cash equivalent must begin at the time the union(s) refuse to allow the collective bargaining agreement(s) to be reopened or not longer than three (3) months after the date this Agreement is executed by the City.

5. Contractor understands that failure to comply with the provisions of Section 4(a) through 4(i), above, will subject Contractor to possible suspension and/or termination of this Agreement for cause; repayment of any or all of the Agreement amount disbursed by the City; debarment for future agreements until all penalties and restitution have been paid in full and/or for up to two (2) years; and/or the imposition of a penalty, payable to the City, in the sum of $50.00 for each employee, for each calendar day during which the employee was discriminated against in violation of the provisions of the Ordinance.

6. Contractor understands and agrees to provide notice to each current employee and, within ten (10) days of hire, to each new employee, of their rights under the Ordinance. Contractor further agrees to

maintain a copy of each such letter provided, in an appropriate file for inspection by authorized representatives of the City. Contractor also agrees to prominently display a poster informing each employee of these rights.

7. Contractor understands that Contractor has the right to request a waiver of, or exemption from, the provisions of the Ordinance by submitting a written request to the City's Procurement Services Division prior to Agreement award, which request shall identify the provision(s) of the Ordinance authorizing such waiver or exemption and the factual basis for such waiver or exemption. The City shall determine in its sole discretion whether to approve any such request.

8. Contractor agrees to defend, indemnify and hold harmless, the City, its officers and employees, against any claims, actions, damages, costs (including reasonable attorney fees), or other liabilities of any kind arising from any violation of the Requirements or of the Ordinance by Contractor.

The undersigned declares under penalty of perjury under the laws of the State of California that the foregoing is true and correct, and that he or she is authorized to bind the Contractor to the provisions of this Declaration.

Signature of Authorized Representative

4-17-14
Date

John Carey
Print Name

C.E.O.
Title

EXHIBIT A

PROFESSIONAL SERVICES AGREEMENT FOR DESIGN PROFESSIONALS

SCOPE OF SERVICES

1. Representatives.

The CITY Representative for this Agreement is:

Marc Lee, Associate Civil Engineer
915 I Street, 2nd floor, Sacramento, CA 95814
MLee@cityofsacramento.org / (916) 808-7481

All CONTRACTOR questions pertaining to this Agreement shall be referred to the CITY Representative or the Representative's designee.

The CONTRACTOR Representative for this Agreement is:

Vali Cooper & Associates
1760 Creekside Oaks Drive, Suite 140, Sacramento, CA 95833
Hank Doll / (916) 826-3038 / Hank.Doll@valicooper.com

All CITY questions pertaining to this Agreement shall be referred to the CONTRACTOR Representative. All correspondence to CONTRACTOR shall be addressed to the address set forth on page one of this Agreement. Unless otherwise provided in this Agreement, all correspondence to the CITY shall be addressed to the CITY Representative.

2. Professional Liability Insurance. Professional Liability (Errors and Omissions) insurance is ✓ is not ___ *[check one]* required for this Agreement. If required, such coverage must be continued for at least one year(s) following the completion of all Services and Additional Services under this Agreement. (See Exhibit D, Section 11, for complete insurance requirements.)

3. Conflict of Interest Requirements.

A. **Generally.** Under the California Political Reform Act, Government Code §§ 81000 et seq., designated employees of the CITY are required to comply with the CITY's Conflict of Interest Code. The term "designated employees" is a term of art and includes individuals who are working for contractors who are providing services or performing work for the CITY and who are considered to be "consultants" under the Political Reform Act. The term "consultant" generally includes individuals who make, or participate in making, governmental decisions or who serve in a staff capacity. Individuals who perform work that is solely clerical, ministerial, manual or secretarial are not "consultants."

The CITY's Conflict of Interest Code requires designated employees, including individuals who qualify as "consultants", to file the following statements of economic interests:

(1) An "assuming office" statement of economic interests to be filed within 30 days after execution of the agreement between the City and the contractor;

(2) Annual statements of economic interests while the agreement remains in effect, to be filed not later than April 30 of each year; and

(3) A "leaving office" statement of economic interests to be filed within 30 days of completion of the contract.

The above statements of economic interests are public records subject to public disclosure under the California Public Records Act.

The CITY's Conflict of Interest Code also requires individuals who qualify as "consultants" under the Political Reform Act to comply with the conflict of interest provisions of the Political Reform Act, which generally prohibit individuals from making or participating in the making of decisions that will have a material financial effect on their economic interests.

B. **Conflict of Interest Statements.** The individual(s) who will provide services or perform work pursuant to this Agreement are "consultants" within the meaning of the Political Reform Act and the CITY's Conflict of Interest Code: ✓ yes ____ no *[check one]*

If "yes" is checked above, CONTRACTOR shall cause the following to occur within 30 days after execution of this Agreement:

(1) Identify the individuals who will provide services or perform work under this Agreement as "consultants";

(2) Cause these individuals to file with the CITY Representative the "assuming office" statements of economic interests required by the CITY's Conflict of Interest Code.

Thereafter, throughout the term of the Agreement, CONTRACTOR shall cause these individuals to file with the CITY Representative annual statements of economic interests, and "leaving office" statements of economic interests, as required by the CITY's Conflict of Interest Code. The CITY may withhold all or a portion of any payment due under this Agreement until all required statements are filed.

4. Scope of Services. [*Describe services to be provided here, or, if scope of services is described in an attachment, label the attachment "Attachment 1 to Exhibit A" and include the following sentence:*]

The services provided shall be as set forth in Attachment 1to Exhibit A, attached hereto and incorporated herein.

5. Time of Performance. The services described herein shall be provided through December 31, 2014.

ATTACHMENT 1 TO EXHIBIT A

SCOPE OF SERVICES

FOR

CONSTRUCTION MANAGEMENT SERVICES

FOR THE

CITY OF SACRAMENTO

WEST TUNNEL RAMPS ACCESS PROJECT

FEDERAL AID PROJECT NO: HPLUL-5002(167)

PROJECT PN: T 15029031

To follow is a description of the scope of services that Vali Cooper & Associates, Inc. (VC&A) will provide staffing level as dictated by the cost proposal. Most subtasks are performed in conjunction with one another. All tasks hours are estimated on a time and material basis that may need adjustment should the contractor's schedule differ from the staffing plan proposed or changes beyond the control of VC&A are imposed. Mike Waldron will be the primary inspector with Steve Tuthill as backup as needed. For purposes of this scope Steve Tuthill may be used alternatively to Mike Waldron.

Task 1: Pre-Construction Services

1.1 Meetings
VC&A will attend the various design coordination meetings to provide construction insight and adapt lessons learned in previous Railyards projects into the process.
Deliverable(s): Minutes if requested.
Staff: Hank Doll (HD), Kelly Mielbrecht (KM)

1.2 Project Documents Review
If authorized by the client, VC&A will provide review of the project plans, specifications using VC&A's review checklist.
Deliverable(s): Review comments in an electronic spreadsheet.
Staff: HD, KM, Mike Waldron (MW) , Elias Rashmawi (ER) and Biologist(ICF)

1.3 Bid-Ad-Award Assistance
VC&A Staff will assist the owner, as directed, with setting up the project documents for bidding purposes. VC&A understands that the City of Sacramento will advertise the project. VC&A will assist at any pre-bid meetings and host any on-site tours of the project to prospective bidders using the owner-approved release from liability form. VC&A will assist with the review of bids for responsiveness as directed.
Deliverable(s): Electronic documentation as may be needed.
Staff: KM and Jennifer Clark (JC)

1.4 Utility Coordination

This subtask includes overseeing utility coordination and attending coordination meetings during the preconstruction phase of the project. VC&A will be provided reports from those meetings.
Deliverable(s): Client updates via email.
Staff: KM and MW

1.5 Project Set-Up
This subtask includes setting up the project files in accordance with the City of Sacramento and State of California Local Assistance Procedures guidelines, familiarizing staff with the plans and construction contract, meeting other stakeholders, and taking preconstruction photos and videos.

Prior to set-up, a meeting will be held with the owners, CM and OE to discuss various documentation formats and protocols (timing and distribution). The results of this meeting will be memorialized and provided to all parties present.

Documents will be setup in hard copy files as well as electronically (pdf, word and excel formats). The project office and amenities will be provided by the owner.
Deliverable(s): Set-up meeting memorialization letter. Client updates via email.
Staff: HD, KM, and JC

1.6 Preconstruction Biological Surveys
This subtask includes performance and reporting of pre-construction surveys as required by the mitigation monitoring plan. This work does not include the study on the historic foundry as this is anticipated to be complete prior to construction under a different contract. Requisite training of personnel will be performed as well.
Deliverable(s): Electronic reports to owner, City and State; training documentation for files
Staff: KM and ICF

1.7 Preconstruction Meeting
The Construction Manager (CM) will hold the pre-construction meeting. All appropriate persons will be invited, including the selected contractor, CM staff and subconsultants, inspectors, owner, utility companies, and at the owner's discretion, any other involved entities.

At this meeting, project specifics are typically discussed, including:

- Contract submittal requirements
- Progress payments
- Change order procedures
- Potential claims procedures
- Site security
- Labor Compliance
- Access and material storage
- The inspection process
- Construction schedule requirements
- Technical issues and safety procedures
- Various regulatory permit requirements
- Coordination with other projects
- Constraints and Phasing Requirements
- OAC and Railyard Meetings

VC&A will prepare an agenda, action items and meeting minutes for this meeting.
Deliverable(s): agenda, action items and meeting minutes in electronic format
Staff: All

1.8 Mitigation Monitoring
The CM with the assistance of ICF and the ER will monitor the construction contractor's compliance with the mitigation monitoring plan. The team will document the successful implementation in a final project report.
Deliverable(s): Electronic reports to owner, City and State; training documentation for files
Staff: KM, ER, ICF

Task 2: Construction Task

2.1 Contract Management

VC&A will use our in-house Electronic Contract Tracking System (ECATS) to address construction contract management and record keeping requirements. Our team will be responsible for setting up and implementing our ECATS system. The owner will have access to the project documents at any time.

CATS satisfies the following aspects of document control:

- ✓ Conforms to City of Sacramento and State Procedures
- ✓ Maintaining project files
- ✓ Submittal
- ✓ RFI
- ✓ Correspondence tracking
- ✓ Inspections and releases
- ✓ Tracking status of contract change orders
- ✓ Tracking progress pay estimates and overall project budget
- ✓ Tracking potential claims
- ✓ Tracking materials testing results and follow-up
- ✓ Can be modified to accept other documentation
- ✓ Various progress reports

Deliverable(s): Electronic reports to owner and files
Staff: KM and JC

2.2 Utility Coordination
This task includes implementing successful utility coordination for the project including meetings, as needed. VC&A will prepare an agenda, action items and meeting minutes for all meetings.
Deliverable(s): agenda, action items and meeting minutes
Staff: KM and MW

2.3 Environmental Management
The CM will work with the ER and City designee to oversee environmental aspects of the projects. ER will monitor and manage soils and groundwater in accordance with Railyards site documents including the various owner's management plans. ER will also oversee the preparation of soils and groundwater documentation as directed by the client. ER will regularly correspond and meet with DTSC and other regulatory agencies as authorized by the client. Sampling and results will be reported and provided to client as needed. Testing of samples will be performed by Sunstar Labs under subagreement with Stantec.
Deliverable(s): Electronic reports as dictated by the client.
Staff: KM, Stantec and Sunstar

2.4 Coordination and Correspondence
The CM will serve as the day-to-day focal point for coordination among the owner, contractor, designer, stakeholders, materials testers and surveyors. VC&A will document all communications with the contractor in correspondence and daily diaries. Our CM will hold weekly progress meetings to address the status of the project and project issues, and will review contractor correspondence and prepare responses applicable to technical issues.
Deliverable(s): letters, emails, correspondence, meeting agenda/action items/meeting minutes electronically as dictated by task 1.7 and available on ECATS website.
Staff: KM, JC and ER

2.5 Schedule Management, Progress Meetings and Reports
The schedule will be used as a tool to track construction progress and monitor construction delays. Our team will first review and approve the contractor's baseline schedule for conformance with the contract and for reasonableness of the sequence and duration of activities prior to commencement of work. Schedule updates will be required monthly and for any schedule conflicts. These will be reviewed for completeness and clarity by the VC&A staff. Scheduling meetings will be held as needed.

In weekly progress meetings, VC&A will receive from the contractor, in at least, a "one-week back and two-week look-ahead schedule" at progress meetings. This allows VC&A to manage and plan for the upcoming work. It also assists in managing the contractor's progress and allows us to coordinate and schedule the testing, monitoring and surveying more efficiently. Inconsistencies with the approved project schedule and associated updates will be addressed and corrected. Meetings will also include updates on CCO's, RFI's and outstanding issues.

Monthly progress reports will be provided to the owner that contains information regarding the work completed and any key issues. The ECATS has a consistently updated progress report that can be used for this task if the format is acceptable to the owner.

Deliverable(s): schedules, letters, emails, correspondence, meeting agenda/action items/meeting minutes electronically and on ECATS website.
Staff: KM, MW and JC

2.6 Mitigation Monitoring
The CM with the assistance of ER and ICF will monitor the project's mitigation monitoring plan (MMP). The team will document the successful implementation in a final project report.
Deliverable(s): Electronic reports to owner, City and State as requested
Staff: MW and ER

2.7 Safety
This project will inherently pose potential hazards to personnel. This project will have a contractor site specific safety plan that is required to be reviewed by VC&A personnel. Safety meetings will be held bi-weekly and when major items of work are imminent. Our inspectors will periodically attend the contractor's tailgate meetings on site. Although sole responsibility for site safety lies with the construction contractor, VC&A will monitor the contractor's site safety and inform the contractor when safety issues are discovered.
Deliverable(s): Bi Weekly meetings for files, incidence reports, safety non-conformance reports
Staff: All

2.8 Public Relations and Third Party Coordination
VC&A has a recognized familiarity in public relations (PR). Working with the City's PR staff, VC&A will assist the Owner with personable project staff. VC&A can assist with personal contact with local business owners, and overseeing the overall public image of the project at owner's discretion.
Deliverable(s): Electronic correspondence to owner
Staff: All

2.9 Submittals
ECATS includes logs for tracking submittals. JC and/or inspectors will stamp and log all submittals and review and distribute them as necessary. The log will be monitored to verify that submittal responses are submitted in a timely manner. VC&A recommend that the submittal log be reviewed at each weekly meeting so that everyone is on the same page in regard to the status of submittals. Submittals to be reviewed by VC&A staff and designer Mark Thomas may include:

- ✓ Trenching & Shoring Plans
- ✓ Signal and Lighting
- ✓ Quality Control Plan
- ✓ Architectural treatments
- ✓ Shoring
- ✓ Materials
- ✓ Shop Drawings
- ✓ Storm Water Pollution Prevention Plans
- ✓ Concrete/AC Mix Designs
- ✓ Falsework
- ✓ Schedule
- ✓ Work plans

All submittals will be reviewed for completeness and in accordance with all contract procedures.
Deliverable(s): Electronic status log available on ECATS website
Staff: All

2.10 Requests for Information (RFI)
VC&A will use the ECATS RFI log to track all inquires from the contractor regarding design or constructability issues. For general construction issues, VC&A will prepare RFI responses in a timely manner. Design related RFI's will be routed to the designer and followed up on to ensure timely turn-around. VC&A will also schedule meetings, if necessary, to resolve more difficult RFI's. RFI's will be reviewed and responded appropriately in an effort to minimize additional project expenses due to claims and/or redesign.
Deliverable(s): Electronic status log available on ECATS website.
Staff: All

2.11 Pay Estimates
Pay estimate requests will be submitted monthly by the contractor with any approved CCO payments as mandated by the City to meet HCD invoicing schedules. VC&A will review quantities, prepare back up documentation for each item, then prepare a pay request signed by the contractor, City Labor Compliance, City DOT and VC&A. Using the City's pay request system, VC&A will coordinate with the contractor and then submit electronically and by hard copy to the City. The City will work with Inland for insertion into their next payment "Draw Request." Additionally, and within the body of the pay request will be any required waivers signed by the contractor. VC&A will track all correspondence required including conditional and unconditional waivers required by the contract. VC&A can prepare a draft Draw request if requested by the Client.
Deliverable(s): Electronic pay request, waiver and status log and on ECATS website.
Staff: KM, JC, MW and DCM

2.12 Change Orders
Prior to construction, procedures for contract change order (CCO) approval will be established with the Owner. During construction, our CM and OE will assist with resolving contract change order issues and will review all contract change orders. Prior to work and, if needed, prior to execution of CCO the CM will prepare an authorization form for the owner to review, modify and sign. VC&A will prepare an independent cost estimate for each change order prior to negotiation with the contractor. VC&A will also assist with coordinating any design change orders with the designer and the Owner. Change order files will be maintained in accordance with City of Sacramento and Local Assistance procedures and documented on the red-lined as-built drawings.
Deliverable(s): Electronic change orders, back up information, status log and authorization forms available upon request and in project files.
Staff: KM, MW and JC

2.13 Potential Claims
ECATS has a file category dedicated to potential claims. All information relative to a potential claim is filed and logged in this category. The Owner will be kept informed regarding the status of potential claims. Our CM and OE will assist in determining the merit of the potential claim and recommend a course of action. Our objective is to work closely with the contractor and Owner to head off potential claims early.
Deliverable(s): Electronic status log and correspondence available on ECATS website.
Staff: All

2.14 Inspection
VC&A will serve as inspector for all day-to-day activities. All work will be inspected for compliance with contract requirements. All field inspections will be documented on the field inspector's daily diary in accordance with the City of Sacramento and State Local Assistance procedures. Digital pictures are taken prior to and during construction, logged and filed with the project files. Field activities include:

- ✓ Monitoring the contractor's work for general conformance with the plans and specifications
- ✓ Documenting the progress of the work with daily diaries and photographs/videos
- ✓ Carefully monitoring contract change order work in the field
- ✓ Measuring and calculating quantities
- ✓ Coordinating and documenting material testing
- ✓ Coordinating surveying and construction staking
- ✓ Reviewing and logging materials test results and addressing non-conforming tests
- ✓ Performing and documenting Storm Water Pollution Prevention Plan requirements
- ✓ Verifying extra work for approved contract change orders
- ✓ Coordinating and conducting final inspections
- ✓ Public relations

Deliverable(s): Electronic diaries, photos and photo logs available on ECATS website
Staff: MW

2.15 Record Drawings

Our CM, OE and/or inspectors will maintain red-lined as-built drawings by hand during the life of the project. Red-lined as-builts will be turned over to the designer at project completion. VC&A will also monitor the contractor's progress on their contract required as-builts.
Deliverable(s): Electronic Record Drawings and log in project files
Staff: All

2.16 Punchlist
The CM with assistance from the RE and inspectors, will review the constructed project for general conformance to the project plans and specifications as the project proceeds and at completion. This will be done in close coordination with the City and/or future owner(s). All end-of-project deficiencies will be presented to the contractor and documented in punchlist letter. All non-conformance reports will be reviewed to ensure all corrections have been made. When all deficiencies have been corrected, the CM will draft a letter for the owner to accept the project.
Deliverable(s): Electronic punchlist and acceptance letter
Staff: KM, MW and Mark Thomas

***2.17* Materials Testing**
The team will coordinate between the contractor and the City-provided materials tester for the estimated project-related material testing. Frequency of testing will be performed in accordance with the Local Assistance Procedures. Material test results will be reviewed, logged and filed in ECATS. Any failed tests will be addressed and appropriate correction measures implemented by the contractor and documented.

Certified materials testing technicians will perform batch plant inspection, field sampling and testing, and laboratory testing of the materials used during construction to determine compliance with project requirements. The laboratory will be certified and the firm will be familiar with required frequency of tests and test methods.

Source inspections beyond 60 miles of the site is excluded but may be required. This will constitute a change in scope and require cost modifications. The contractor's specifications should outline reimbursement to the owner for source inspection beyond 60 miles.
Deliverable(s): Electronic materials testing log, inspection reports and test reports
Staff: KM, JC and MW.

2.18 Biological Monitoring
This task includes training, performance and reporting of biological monitoring as required by the mitigation monitoring plan. This work will be performed by ICF.
Deliverable(s): Electronic reports to owner, City and State; training documentation for files
Staff: KM and ICF

2.19 Labor Compliance
This task includes monitoring the performance and reporting of labor compliance as required by State law. This work will be performed by DCM with the assistance of the CM, OE and inspectors.
Deliverable(s): Electronic reports to owner available in the project files.
Staff: All staff and DCM.

2.20 Construction Services (Designer)
This task includes the designer providing support to the City as it relates to the design. The designer will support the field team as well, with submittal and RFI review and responses.
Deliverable(s): Correspondence and plan/specification revisions and clarifications available in the project files.
Staff: KM, JC and Mark Thomas.

2.21 Construction Staking
This task includes coordinating staking requests and the City-provided surveyors. Staking notes will be provided to contractor.
Deliverable(s): correspondence, requests and notes available in the project files.
Staff: KM, JC and Mark Thomas.

Task 3: Post Construction Activities Task

3.1 Final Project Review
The project is only truly completed when all the construction is complete, including the punchlist items, the work is approved and accepted, and the project paperwork is completed and archived. VC&A, with the assistance of the owner will perform a final project review consisting of reviewing documentation for completeness, removing extraneous materials, negotiating final change orders and potential claims.
Deliverable(s): Electronic reports to owner available in the project files.
Staff: HD, KM and JC

3.2 Final Payment
This task includes preparing the proposed final payment, addressing the contractor's exceptions and submitting final payment requests in the time frame required by the contract.
Deliverable(s): Electronic reports and pay requests to owner available in the project files.
Staff: KM and JC

3.3 O&M/Warranty Training and Documentation
The construction contractor should be required to provide O&M training and manuals. VC&A will oversee, review and approve and finally submit documentation to appropriate maintaining agencies. Documentation will also be made part of the record files. VC&A will coordinate with contractor and maintaining agency the required training.
Deliverable(s): Hard copies of documentation (as required by the contractor) to maintaining agency.
Staff: KM and JC

3.4 Final Report
Along with the records, a project completion report is prepared in accordance with the City of Sacramento and Local Assistance procedures that include:

- ✓ Summary of change orders and potential claims
- ✓ Summary of the materials tested and incorporated into the work (material certification)
- ✓ Summary of work completed
- ✓ DBE Utilization
- ✓ Final project schedule
- ✓ Final project expenditures
- ✓ Summary of final acceptance
- ✓ As-built drawings
- ✓ Environmental summary(s)

Deliverable(s): Final report to owner and also available in the project files.
Staff: HD, KM, JC, ER, ICF and Mark Thomas

EXHIBIT B

PROFESSIONAL SERVICES AGREEMENT FOR DESIGN PROFESSIONALS

FEE SCHEDULE/MANNER OF PAYMENT

1. **CONTRACTOR's Compensation.** The total of all fees paid to the CONTRACTOR for the performance of all services set forth in Exhibit A, including normal revisions (hereafter the "Services"), and for all authorized Reimbursable Expenses, shall not exceed the total sum of $ 167,811.30 .

2. **Billable Rates.** CONTRACTOR shall be paid for the performance of Services on an hourly rate, daily rate, flat fee, lump sum or other basis, as set forth in Attachment 1 to Exhibit B, attached hereto and incorporated herein. *[Attach list of billable rates that apply, labeled "Attachment 1 to Exhibit B".]*

3. **CONTRACTOR's Reimbursable Expenses.** Reimbursable Expenses shall be limited to actual expenditures of CONTRACTOR for expenses that are necessary for the proper completion of the Services and shall only be payable if specifically authorized in advance by CITY.

4. **Payments to CONTRACTOR.**

   A. Payments to CONTRACTOR shall be made within a reasonable time after receipt of CONTRACTOR's invoice, said payments to be made in proportion to services performed or as otherwise specified in Attachment 1 to Exhibit B. CONTRACTOR may request payment on a monthly basis. CONTRACTOR shall be responsible for the cost of supplying all documentation necessary to verify the monthly billings to the satisfaction of CITY.

   B. All invoices submitted by CONTRACTOR shall contain the following information:

      (1) Job Name
      (2) Description of services billed under this invoice, and overall status of project
      (3) Date of Invoice Issuance
      (4) Sequential Invoice Number
      (5) CITY's Purchase Order Number
      (6) Total Contract Amount
      (7) Amount of this Invoice (Itemize all Reimbursable Expenses)
      (8) Total Billed to Date
      (9) Total Remaining on Contract
      (10) Updated project schedule. This shall identify those steps that shall be taken to bring the project back on schedule if it is behind schedule.

   C. Items shall be separated into Services and Reimbursable Expenses. Billings that do not conform to the format outlined above shall be returned to CONTRACTOR for correction. CITY shall not be responsible for delays in payment to CONTRACTOR resulting from CONTRACTOR's failure to comply with the invoice format described below.

D. Requests for payment shall be sent to:

Public Works
915 I Street, 2nd floor
Sacramento, CA 95814

Attn: Marc Lee

5. **Additional Services.** Additional Services are those services related to the scope of services of CONTRACTOR set forth in Exhibit A but not anticipated at the time of execution of this Agreement. Additional Services shall be provided only when a Supplemental Agreement authorizing such Additional Services is approved by CITY in accordance with CITY's Supplemental Agreement procedures. CITY reserves the right to perform any Additional Services with its own staff or to retain other consultants to perform said Additional Services.

6. **Accounting Records of CONTRACTOR.** During performance of this Agreement and for a period of three (3) years after completing all Services and Additional Services hereunder, CONTRACTOR shall maintain all accounting and financial records related to this Agreement, including, but not limited to, records of CONTRACTOR's costs for all Services and Additional Services performed under this Agreement and records of CONTRACTOR's Reimbursable Expenses, in accordance with generally accepted accounting practices, and shall keep and make such records available for inspection and audit by representatives of the CITY upon reasonable written notice.

7. **Taxes.** CONTRACTOR shall pay, when and as due, any and all taxes incurred as a result of CONTRACTOR's compensation hereunder, including estimated taxes, and shall provide CITY with proof of such payment upon request. CONTRACTOR hereby agrees to indemnify CITY for any claims, losses, costs, fees, liabilities, damages or injuries suffered by CITY arising out of CONTRACTOR's breach of this Section 7.

PRIME CONTRACTOR - VALI COOPER & ASSOCIATES (OH/Fringe=139.57%; Profit=10%)

		Hank Doll	Kelly Mielbrecht	Steve Tuthill	Mike Waldron	Jennifer Clark	Total Costs
	Classification	CM	RE	Insp (Note 1)	Insp	OE/Insp	
TASK 1: PRE-CONSTRUCTION SERVICES							
1.1	Meetings		10				$1,500.70
1.2	Project Documents Review		10		10		$2,830.70
1.3	Bid-Ad-Award Assistance						$0.00
1.4	Utility Coordination		10		8		$2,564.70
1.5	Project Set-up		10			10	$2,957.70
1.6	Preconstruction Biological and Cultural Surveys/Training		2		1		$433.14
1.7	Preconstruction Meeting		4		2		$866.28
1.8	Mitigation Monitoring		2		4		$832.14
	TASK TOTAL	0	48	0	25	10	$11,985.36
TASK 2: CONTRACT MANAGEMENT							
2.1	Contract Management		46			30	$11,274.22
2.2	Utility Coordination		8		20		$3,860.56
2.3	Environmental Management		2		5		$965.14
2.4	Coordination and Correspondence		20		20		$5,661.40
2.5	Schedule Management, Progress Meetings and Reports		20		10		$4,331.40
2.6	Mitigation Monitoring				2		$266.00
2.7	Safety		6		6		$1,698.42
2.8	Public Relations and 3rd Party Coordination		14		10		$3,430.98
2.9	Submittals		16		5		$3,066.12
2.10	RFIs		15				$2,251.05
2.11	Pay Estimates		12		6		$2,598.84
2.12	Change Orders		10		2		$1,766.70
2.13	Potenital Claims						$0.00
2.14	Inspection		10		94		$14,002.70
2.15	Record Drawings		6		5		$1,565.42
2.16	Punch List		8		20		$3,860.56
2.17	Material Testing		2				$300.14
2.18	Biological and Cultural Resource Monitoring						$0.00
2.19	Labor Compliance		6				$900.42
2.20	Construction Services (Designer)						$0.00
2.21	Construction Staking		4				$600.28
	TASK TOTAL = 440 hours*	0	205	0	205	30	$62,400.35
TASK 3: POST CONSTRUCTIN ACTIVITIES							
3.1	Final Project Review		20		22	10	$7,384.40
3.2	Final Payment		20		8		$4,065.40
3.3	O&M/Warranty Documentation		4		5		$1,265.28
3.4	Final Report		5		5	10	$2,872.35
	TASK TOTAL	0	49	0	40	20	$15,587.43
	Totals	0	302	0	270	60	$89,973.14
	10-H approved rate	$185.00	$150.07	$133.00	$133.00	$145.70	
	Task 1 Costs	$0.00	$7,203.36	$0.00	$3,325.00	$1,457.00	$11,985.36
	Task 2 Costs	$0.00	$30,764.35	$0.00	$27,265.00	$4,371.00	$62,400.35
	Task 3 Costs	$0.00	$7,353.43	$0.00	$5,320.00	$2,914.00	$15,587.43
	Total Costs	$0.00	$45,321.14	$0.00	$35,910.00	$8,742.00	$89,973.14

Note 1: Steve Tuthill may be used interchangably with Mike Waldron. All inspection hours shown dedicated to Mike Waldron as he will be the primary inspector.
Note 2: Other names with same classification and per approved 10-H rates may be used
Note 3: Offsite work will be at non-prevailing wage rate (See 10-H)

*55 WD's construction at 1 FTE = 440 Hrs

SUBCONTRACTOR - STANTEC (OH/Fringes = 168.48%; Profit =10%)

		Elias Rashmawi Environmental Manager	Dean Mochrie Environmental Manager	Colin Ryan Soil/Material Tester (note 3)	Brian Egger Soil/Material Tester (note 3)	Robley Lawson Admin	Sunstar Labs (note 4)	Labor Costs
TASK 1: PRE-CONSTRUCTION SERVICES								
1.1	Meetings							$0.00
1.2	Project Documents Review	6						$1,050.00
1.3	Bid-Ad-Award Assistance							$0.00
1.4	Utility Coordination							$0.00
1.5	Project Set-up							$0.00
1.6	Preconstruction Biological and Cultural Surveys/Training							$0.00
1.7	Preconstruction Meeting	2						$350.00
1.8	Mitigation Monitoring							$0.00
	TASK TOTAL	8	0	0		0		$1,400.00
TASK 2: CONTRACT MANAGEMENT								
2.1	Contract Management							$0.00
2.2	Utility Coordination							$0.00
2.3	Environmental Management	28		20		20	1	$10,580.00
2.4	Coordination and Correspondence							$0.00
2.5	Schedule Management, Progress Meetings and Reports							$0.00
2.6	Mitigation Monitoring							$0.00
2.7	Safety							$0.00
2.8	Public Relations and 3rd Party Coordination							$0.00
2.9	Submittals							$0.00
2.10	RFIs							$0.00
2.11	Pay Estimates							$0.00
2.12	Change Orders							$0.00
2.13	Potenital Claims							$0.00
2.14	Inspection							$0.00
2.15	Record Drawings							$0.00
2.16	Punch List							$0.00
2.17	Material Testing							$0.00
2.18	Biological and Cultural Resource Monitoring							$0.00
2.19	Labor Compliance							$0.00
2.20	Construction Services (Designer)							$0.00
2.21	Construction Staking							$0.00
	TASK TOTAL	28	0	20		20	1	$10,580.00
TASK 3: POST CONSTRUCTIN ACTIVITIES								
3.1	Final Project Review							$0.00
3.2	Final Payment							$0.00
3.3	O&M/Warranty Documentation							$0.00
3.4	Final Report	4				4		$876.00
	TASK TOTAL	4	0	0		4		$876.00
	SUBCONTRACTOR TOTAL	40	0	20		24	1	$12,856.00
	10-H approved rate	$175.00	$150.00	$140.00	$140.00	$44.00	$2,000.00	
	Task 1 Costs	$1,400.00	$0.00	$0.00	$0.00	$0.00	$0.00	$1,400.00
	Task 2 Costs	$4,900.00	$0.00	$2,800.00	$0.00	$880.00	$2,000.00	$10,580.00
	Task 3 Costs	$700.00	$0.00	$0.00	$0.00	$176.00	$0.00	$876.00
	check							
	Total Costs	$7,000.00	$0.00	$2,800.00	$0.00	$1,056.00	$2,000.00	$12,856.00

Note 1: Steve Tuthill may be used interchangably with Mike Waldron. All inspection hours shown dedicated to Mike Waldron as he will be the primary inspector.
Note 2: Other names with same classification and per approved 10-H rates may be used
Note 3: Offsite work will be at non-prevailing wage rate (See 10-H)

Note 4: Sunstar labs for soils and groundwater test sample analysis per attached rate sheets.

SUBCONTRACTOR - ICF (OH/Fringe=174.49%; Profit=10%)

		Christiann Havelaar	Tina Sorvari	Andrea Gueyger	Leila Harris	John Howe	Labor Costs
		Sr. Consultant I (Note 2)	Associate Consultant I (Note 2)	Associate Consultant II (Note 2)	Associate Consultant III (Note 2)	Sr. Consultant II (Note 2)	
TASK 1: PRE-CONSTRUCTION SERVICES							
1.1	Meetings						$0.00
1.2	Project Documents Review						$0.00
1.3	Bid-Ad-Award Assistance						$0.00
1.4	Utility Coordination						$0.00
1.5	Project Set-up						$0.00
1.6	Preconstruction Biological and Cultural Surveys/Training	4	8	8	4	4	$2,560.04
1.7	Preconstruction Meeting						$0.00
1.8	Mitigation Monitoring						$0.00
	TASK TOTAL	4	8	8	4	4	$2,560.04
TASK 2: CONTRACT MANAGEMENT							
2.1	Contract Management						$0.00
2.2	Utility Coordination						$0.00
2.3	Environmental Management						$0.00
2.4	Coordination and Correspondence						$0.00
2.5	Schedule Management, Progress Meetings and Reports						$0.00
2.6	Mitigation Monitoring						$0.00
2.7	Safety						$0.00
2.8	Public Relations and 3rd Party Coordination						$0.00
2.9	Submittals						$0.00
2.10	RFIs						$0.00
2.11	Pay Estimates						$0.00
2.12	Change Orders						$0.00
2.13	Potenital Claims						$0.00
2.14	Inspection						$0.00
2.15	Record Drawings						$0.00
2.16	Punch List						$0.00
2.17	Material Testing						$0.00
2.18	Biological and Cultural Resource Monitoring	10	10	5	10	10	$4,369.30
2.19	Labor Compliance						$0.00
2.20	Construction Services (Designer)						$0.00
2.21	Construction Staking						$0.00
	TASK TOTAL	10	10	5	10	10	$4,369.30
TASK 3: POST CONSTRUCTIN ACTIVITIES							
3.1	Final Project Review						$0.00
3.2	Final Payment						$0.00
3.3	O&M/Warranty Documentation						$0.00
3.4	Final Report						$0.00
	TASK TOTAL	0	0	0	0	0	$0.00
	SUBCONTRACTOR TOTAL	14	18	13	14	14	$6,929.34
	10-H approved rate	$114.64	$84.13	$79.30	$83.72	$114.79	
	Task 1 Costs	$458.56	$673.04	$634.40	$334.88	$459.16	$2,560.04
	Task 2 Costs	$1,146.40	$841.30	$396.50	$837.20	$1,147.90	$4,369.30
	Task 3 Costs	$0.00	$0.00	$0.00	$0.00	$0.00	$0.00
	check						
	Total Costs	$1,604.96	$1,514.34	$1,030.90	$1,172.08	$1,607.06	$6,929.34

Note 1: Steve Tuthill may be used interchangably with Mike Waldron. All inspection hours shown dedicated to Mike Waldron as he will be the primary inspector.
Note 2: Other names with same classification and per approved 10-H rates may be used
Note 3: Offsite work will be at non-prevailing wage rate (See 10-H)

SUBCONTRACTOR - Mark Thomas (OH/Fringe=169.90%; Profit=10%)

		Matt Brogan	Ken Doty	Todd Lewis	Jony Tji	Ruel Opada	Janet Doty	Spencer Ord	Y&C Consultants	MTW Group	Labor Costs
		Engineering Manager	Project Manager	Project Engineer	Sr. Design Engineer	Desin Engineer	Eng/Survey/ Cadd Tech (Note 2)	Design (Tech Assistance) (Note 2)	For Rates See 10-H	For Rates See 10-H	
TASK 1: PRE-CONSTRUCTION SERVICES											
1.1	Meetings										$0.00
1.2	Project Documents Review										$0.00
1.3	Bid-Ad-Award Assistance										$0.00
1.4	Utility Coordination										$0.00
1.5	Project Set-up										$0.00
1.6	Preconstruction Biological and Cultural Surveys/Training										$0.00
1.7	Preconstruction Meeting										$0.00
1.8	Mitigation Monitoring										$0.00
	TASK TOTAL	0	0	0	0	0	0	0	0	0	$0.00
TASK 2: CONTRACT MANAGEMENT											
2.1	Contract Management										$0.00
2.2	Utility Coordination										$0.00
2.3	Environmental Management										$0.00
2.4	Coordination and Correspondence										$0.00
2.5	Schedule Management, Progress Meetings and Reports										$0.00
2.6	Mitigation Monitoring										$0.00
2.7	Safety										$0.00
2.8	Public Relations and 3rd Party Coordination										$0.00
2.9	Submittals										$0.00
2.10	RFIs										$0.00
2.11	Pay Estimates										$0.00
2.12	Change Orders										$0.00
2.13	Potenital Claims										$0.00
2.14	Inspection										$0.00
2.15	Record Drawings										$0.00
2.16	Punch List										$0.00
2.17	Material Testing										$0.00
2.18	Biological and Cultural Resource Monitoring										$0.00
2.19	Labor Compliance										$0.00
2.20	Construction Services (Designer)	7	40	80	110	35	12	12	$2,000.00	$6,965.00	$37,666.06
2.21	Construction Staking										$0.00
	TASK TOTAL	7	40	80	110	35	12	12	$2,000.00	$6,965.00	$37,666.06
TASK 3: POST CONSTRUCTIN ACTIVITIES											
3.1	Final Project Review										$0.00
3.2	Final Payment										$0.00
3.3	O&M/Warranty Documentation										$0.00
3.4	Final Report										$0.00
	TASK TOTAL	0	0	0				0			$0.00
	SUBCONTRACTOR TOTAL	7	40	80	110	35	12	12			$37,666.06
	10-H approved rate	$185.00	$185.00	$158.16	$156.03	$143.86	$139.75	$53.43			
	Task 1 Costs	$0.00	$0.00	$0.00	$0.00	$0.00	$0.00	$0.00	$0.00	$0.00	$0.00
	Task 2 Costs	$1,295.00	$7,400.00	$12,652.80	$17,163.30	$5,035.10	$1,677.00	$641.16	$2,000.00	$6,965.00	$37,666.06
	Task 3 Costs	$0.00	$0.00	$0.00	$0.00	$0.00	$0.00	$0.00	$0.00	$0.00	$0.00
	check										
	Total Costs	$1,295.00	$7,400.00	$12,652.80	$17,163.30	$5,035.10	$1,677.00	$641.16	$2,000.00	$6,965.00	$37,666.06

Note 1: Steve Tuthill may be used interchangably with Mike Waldron. All inspection hours shown dedicated to Mike Waldron as he will be the primary inspector.
Note 2: Other names with same classification and per approved 10-H rates may be used
Note 3: Offsite work will be at non-prevailing wage rate (See 10-H)

SUBCONTRACTOR DCM Group (OH/Fringe=65.00%; Profit=8.5%)

		Victoria Casteneda Principal	Lindsey Kerfeld Lead Compliance Officer	Dina Dennis Contract Compliance Analyst (Note 2)	Labor Costs
TASK 1: PRE-CONSTRUCTION SERVICES					
1.1	Meetings				$0.00
1.2	Project Documents Review				$0.00
1.3	Bid-Ad-Award Assistance				$0.00
1.4	Utility Coordination				$0.00
1.5	Project Set-up	2	6	1	$788.01
1.6	Preconstruction Biological and Cultural Surveys/Training				$0.00
1.7	Preconstruction Meeting	2	2	1	$447.81
1.8	Mitigation Monitoring				$0.00
	TASK TOTAL	4	8	2	$1,235.82
TASK 2: CONTRACT MANAGEMENT					
2.1	Contract Management				$0.00
2.2	Utility Coordination				$0.00
2.3	Environmental Management				$0.00
2.4	Coordination and Correspondence				$0.00
2.5	Schedule Management, Progress Meetings and Reports				$0.00
2.6	Mitigation Monitoring				$0.00
2.7	Safety				$0.00
2.8	Public Relations and 3rd Party Coordination				$0.00
2.9	Submittals				$0.00
2.10	RFIs				$0.00
2.11	Pay Estimates				$0.00
2.12	Change Orders				$0.00
2.13	Potenital Claims				$0.00
2.14	Inspection				$0.00
2.15	Record Drawings				$0.00
2.16	Punch List				$0.00
2.17	Material Testing				$0.00
2.18	Biological and Cultural Resource Monitoring				$0.00
2.19	Labor Compliance	30	100	100	$16,996.30
2.20	Construction Services (Designer)				$0.00
2.21	Construction Staking				$0.00
	TASK TOTAL	30	100	100	$16,996.30
TASK 3: POST CONSTRUCTIN ACTIVITIES					
3.1	Final Project Review				$0.00
3.2	Final Payment	2	10		$1,077.32
3.3	O&M/Warranty Documentation				$0.00
3.4	Final Report	2	10		$1,077.32
	TASK TOTAL	4	20	0	$2,154.64
	SUBCONTRACTOR TOTAL	38	128	102	$20,386.76
	10-H approved rate	$113.41	$85.05	$50.89	
	Task 1 Costs	$453.64	$680.40	$101.78	$1,235.82
	Task 2 Costs	$3,402.30	$8,505.00	$5,089.00	$16,996.30
	Task 3 Costs	$453.64	$1,701.00	$0.00	$2,154.64
	check				
	Total Costs	$4,309.58	$10,886.40	$5,190.78	$20,386.76

Note 1: Steve Tuthill may be used interchangably with Mike Waldron. All inspection hours shown dedicated to Mike Waldron as he will be the primary inspector.
Note 2: Other names with same classification and per approved 10-H rates may be used
Note 3: Offsite work will be at non-prevailing wage rate (See 10-H)

CM SERVICES for WTAR Project

3/18/2014

TASK 1: PRE-CONSTRUCTION SERVICES		TOTALS
1.1	Meetings	$1,500.70
1.2	Project Documents Review	$3,880.70
1.3	Bid-Ad-Award Assistance	$0.00
1.4	Utility Coordination	$2,564.70
1.5	Project Set-up	$3,745.71
1.6	Preconstruction Biological and Cultural Surveys/Training	$2,993.18
1.7	Preconstruction Meeting	$1,664.09
1.8	Mitigation Monitoring	$832.14
	TASK TOTAL	$17,181.22
TASK 2: CONTRACT MANAGEMENT		
2.1	Contract Management	$11,274.22
2.2	Utility Coordination	$3,860.56
2.3	Environmental Management	$11,545.14
2.4	Coordination and Correspondence	$5,661.40
2.5	Schedule Management, Progress Meetings and Reports	$4,331.40
2.6	Mitigation Monityoring	$266.00
2.7	Safety	$1,698.42
2.8	Public Relations and 3rd Party Coordination	$3,430.98
2.9	Submittals	$3,066.12
2.10	RFIs	$2,251.05
2.11	Pay Estimates	$2,598.84
2.12	Change Orders	$1,766.70
2.13	Potenital Claims	$0.00
2.14	Inspection	$14,002.70
2.15	Record Drawings	$1,565.42
2.16	Punch List	$3,860.56
2.17	Material Testing	$300.14
2.18	Biological and Cultural Resource Monitoring	$4,369.30
2.19	Labor Compliance	$17,896.72
2.20	Construction Services (Designer)	$37,666.06
2.21	Construction Staking	$600.28
	TASK TOTAL	$132,012.01
TASK 3: POST CONSTRUCTIN ACTIVITIES		
3.1	Final Project Review	$7,384.40
3.2	Final Payment	$5,142.72
3.3	O&M/Warranty Documentation	$1,265.28
3.4	Final Report	$4,825.67
	TASK TOTAL	$18,618.07
	TOTAL	$167,811.30
	Task 1 Costs	$17,181.22
	Task 2 Costs	$132,012.01
	Task 3 Costs	$18,618.07

Note 1: Steve Tuthill may be used interchangably with Mike Waldron. All inspection hours shown dedicated to Mike Waldron as he will be the primary inspector.

Note 2: Other names with same classification and per approved 10-H rates may be used
Note 3: Offsite work will be at non-prevailing wage rate (See 10-H)

CITY OF SACRAMENTO 10-H FORM

Approved with Supplement # (type Original if it is the Original): Original
CONTRACTOR Name: Vali Cooper & Associates **Date:** 2/6/2014
Project Name: West Tunnel Ramps Access Project
Project #: T15029032

Fringe Benefit %	+	*Overhead %	=	Combined %
35.04%		104.53%		139.57%

Profit %: 8.00%

[Actual Base Hourly Rate Paid to Employee + (Actual Base Hourly Rate Paid to Employee x Combined %)] = A
A x Profit % = B A + B = Actual Fully Loaded Hourly Rate

Key Staff	Prevailing Wage	Classification	Name	Actual Base Hourly Rate Paid to Employee For Reference Only (Does not Include any Fringe or OH)	Actual Fully Loaded Hourly Rate For Reference Only (Includes Fringe, OH & Profit)	Approved Flat Hourly Billing Rate	OT 1.5x Negotiated Flat Hourly Billing Rate	OT 2x Negotiated Flat Hourly Billing Rate
X		Construction Manager	Hank Doll, PE	$75.00	$194.05	$185.00	N/A	N/A
X		Resident Engineer	Kelly Mielbrecht, PE	$58.00	$150.07	$150.07	N/A	N/A
	X	Field Inspector/Office Engineer	Jennifer Clark, PE	$55.29	$143.05	$133.00	N/A	N/A
	X	Field Inspector	Mike Waldron	$60.49	$143.05	$133.00	$156.40	$182.80
	X	Field Inspector	Steve Tuthill	$54.69	$141.50	$133.00	$156.40	$182.80

Other Direct Costs (ODC)	Description	Rate	Units	Total
	Office Supplies	At Cost		$200.00
	Printing/Reproduction	At Cost		$600.00
	Mail	At Cost		$50.00
	Overnight Delivery Services	At Cost		$50.00
	Parking for Meetings off site	At Cost		$100.00
	Office Space (provided by City)	At Cost		$0.00
		At Cost		
			Estimated Total ODC Amount:	$1,000.00

1. List all Professional and Supervisory staff by Classification and Name. For staff not listed by name, a current payroll document identifying their actual base hourly rate shall be provided with every invoice that they are billing time to. The approved flat hourly billing rates for all employees will be calculated and reimbursed based on their actual base hourly rates per the date noted above. Unless CITY Project Manager assigns a fair and reasonable flat hourly billing rate for selected employees. Approved flat hourly billing rates for new employees hired after the date of this cost proposal will not exceed (or shall be in line with) the rates of similar personnel with similar experience listed on this cost proposal. The approved flat hourly billing rate shall be all-inclusive, including all mark-ups, fringe, and overhead expenses and profit.
2. Key Staff shall be determined by CITY Project Manager. (i.e. Project Manger, a specific Principal Engineer, a specific Structural Engineer, etc. Note Key staff with an "X" in the Key Staff column.
3. The employees' actual base hourly rates used to negotiate the flat hourly billing rates in this 10-H Form are the rates that were effective per the date noted above. Addition of new staff or addition of a SUBCONTRACTOR not previously listed on the approved 10-H Form(s) shall require an executed Supplement Agreement. No work shall commence until the Supplemental Agreement is executed and written notification has been provided by CITY Project Manager. New staff shall be paid at the same or lower approved flat hourly billing rate of the previously approved or similar classification. In addition, if the substitution involves Key Staff, CONTRACTOR must request and justify the need for the substitution and obtain approval from CITY Project Manager. Substituted Key Staff shall be as qualified as the original. The executed Supplemental Agreement shall include updated 10-H Forms for CONTRACTOR and SUBCONTRACTOR(S).
4. Approved flat hourly billing rates include all standard equipment including laptop, camera, cell phone, truck, standard personal safety equipment. CITY Project Manager shall approve any other direct costs.
5. Note employees/classifications that are subject to prevailing wage requirements with an "X" in the Prevailing Wage column. Prevailing Wage specified is based on current Department of Industrial Relations (DIR) determination. CONTRACTOR shall be resporisible for any future adjustments to the prevailing wage, including but not limited to, base hourly rates and employer payments as determined by the DIR. CONTRACTOR is responsible for paying the appropriate rate, including escalations that take place during the term of the Agreement. CONTRACTOR shall be reimbursed at the above listed approved flat hourly billing rates.
6. *Overtime may be reimbursed to classifications where it is required by their union contracts (Prevailing Wage classifications). Overtime will not be charged unless prior written approval is received by CITY Project Manager. CITY shall pay CONTRACTOR at the approved overtime rates noted above. CONTRACTOR shall pay prevailing wage employees per prevailing wage guidelines. For more information on applicable prevailing wages, please visit the following website: https://www.dir.ca.gov/OPRL/PWD/
7. Parking, tolls and local transportation costs resulting from commuting to and from the employee's residence to the job site are not reimbursable.
8. The Project will not reimburse CONTRACTOR for costs to relocate its staff to the geographic area of the contract. The Project will not reimburse CONTRACTOR for any per diem.
9. ODC items are to be in compliance with Code of Federal Regulations, Title 48 Part 31 [Federal Acquisition Regulations (FAR) cost principles] and the firm's company-wide allocation policies and charging practices with all clients including federal government, state government, local agencies and private clients.

By signing here, you agree to the terms above, and attest that all information is accurate and true.

CONTRACTOR/SUBCONTRACTOR Project Manager's Signature

(type/print name here) Joel Collins

3-21-14

CITY OF SACRAMENTO 10-H FORM

Approved with Supplement # (type Original if it is the Original): Original

CONTRACTOR Name: Stantec Date: 2/12/2014

Project Name: West tunnel ramps access project

Project #: T15029032

Fringe Benefit %	+	*Overhead %	=	Combined %
61.95%		106.53%		168.48%

Profit %: 8.00%

[Actual Base Hourly Rate Paid to Employee + (Actual Base Hourly Rate Paid to Employee x Combined %)] = A

A x Profit % = B A + B = Actual Fully Loaded Hourly Rate

Key Staff	Prevailing Wage	Classification	Name	Actual Base Hourly Rate Paid to Employee For Reference Only (Does not Include any Fringe or OH)	Actual Fully Loaded Hourly Rate For Reference Only (Includes Fringe, OH & Profit)	Approved Flat Hourly Billing Rate	OT 1.5x Negotiated Flat Hourly Billing Rate	OT 2x Negotiated Flat Hourly Billing Rate
X		Offsite (non prevailing wage)	Colin Ryan	$25.34	$73.48	$74.00	N/A	N/A
X	X	Soil and Material Tester	Colin Ryan	$48.28	$139.99	$140.00	$164.14	$188.28
X		Environmental Manager	Elias Rashmawi (rate approximate and exceeds flat rate)	$100.00	$289.96	$175.00	N/A	N/A
X		Environmental manager	Dean Mochrie (rate approximate and exceed flat rate)	$60.00	$173.98	$150.00	N/A	N/A
X		Offsite (non prevailing wage)	Brian Egger	$32.17	$93.28	$95.00	N/A	N/A
X	X	Soil and Material Tester	Brian Egger	$55.17	$159.97	$140.00	$167.59	$195.17
X		Admin	Robley Lawson	$15.00	$43.49	$44.00	N/A	N/A

Total Other Direct Costs (ODC) [Estimated Total ODC Amount Shall Be Contract

Description	Rate	Units	Total
Sunstar Lab	At Cost (see rates attached)		$2,000.00
	At Cost		
	At Cost		
		Estimated Total ODC Amount:	$2,000.00

1. List all Professional and Supervisory staff by Classification and Name. For staff not listed by name, a current payroll document identifying their actual base hourly rate shall be provided with every invoice that they are billing time to. The approved flat hourly billing rates for all employees will be calculated and reimbursed based on their actual base hourly rates per the date noted above. Unless CITY Project Manager assigns a fair and reasonable flat hourly billing rate for selected employees. Approved flat hourly billing rates for new employees hired after the date of this cost proposal will not exceed (or shall be in line with) the rates of similar personnel with similar experience listed on this cost proposal. The approved flat hourly billing rate shall be all-inclusive, including all mark-ups, fringe, and overhead expenses and profit.
2. Key Staff shall be determined by CITY Project Manager. (i.e. Project Manger, a specific Principal Engineer, a specific Structural Engineer, etc. Note Key staff with an "X" in the Key Staff column.
3. The employees' actual base hourly rates used to negotiate the flat hourly billing rates in this 10-H Form are the rates that were effective per the date noted above. Addition of new staff or addition of a SUBCONTRACTOR not previously listed on the approved 10-H Form(s) shall require an executed Supplement Agreement. No work shall commence until the Supplemental Agreement is executed and written notification has been provided by CITY Project Manager. New staff shall be paid at the same or lower approved flat hourly billing rate of the previously approved or similar classification. In addition, if the substitution involves Key Staff, CONTRACTOR must request and justify the need for the substitution and obtain approval from CITY Project Manager. Substituted Key Staff shall be as qualified as the original. The executed Supplemental Agreement shall include updated 10-H Forms for CONTRACTOR and SUBCONTRACTOR(S).
4. Approved flat hourly billing rates include all standard equipment including laptop, camera, cell phone, truck, standard personal safety equipment. CITY Project Manager shall approve any other direct costs.
5. Note employees/classifications that are subject to prevailing wage requirements with an "X" in the Prevailing Wage column. Prevailing Wage specified is based on current Department of Industrial Relations (DIR) determination. CONTRACTOR shall be responsible for any future adjustments to the prevailing wage, including but not limited to, base hourly rates and employer payments as determined by the DIR. CONTRACTOR is responsible for paying the appropriate rate, including escalations that take place during the term of the Agreement. CONTRACTOR shall be reimbursed at the above listed approved flat hourly billing rates.
6. Overtime may be reimbursed to classifications where it is required by their union contracts (Prevailing Wage classifications). Overtime will not be charged unless prior written approval is received by CITY Project Manager. CITY shall pay CONTRACTOR at the approved overtime rates noted above. CONTRACTOR shall pay prevailing wage employees per prevailing wage guidelines. For more information on applicable prevailing wages, please visit the following website: https://www.dir.ca.gov/OPRL/PWD/
7. Parking, tolls and local transportation costs resulting from commuting to and from the employee's residence to the job site are not reimbursable.
8. The Project will not reimburse CONTRACTOR for costs to relocate its staff to the geographic area of the contract. The Project will not reimburse CONTRACTOR for any per diem.
9. ODC items are to be in compliance with Code of Federal Regulations, Title 48 Part 31 [Federal Acquisition Regulations (FAR) cost principles] and the firm's company-wide allocation policies and charging practices with all clients including federal government, state government, local agencies and private clients.

By signing here, you agree to the terms above, and attest that all information is accurate and true.

E. Rashmawi

CONTRACTOR/SUBCONTRACTOR Project Manager's Signature

(type/print name here) Elias Rashmawi

3/20/2014

SUNSTAR LABORATORY

SunStar Laboratory, Inc.
25712 Commercentre Drive
Lake Forest, CA 92630
530-304-5525
916-372-7523 FAX
bill@sunstarlabs.com

PRICING FOR ANALYTICAL SERVICES

Date:	09/13/13	**Expires:**	**9/13/2015**	**Quote No.**	Stantec 91313
Contact Person:	Elias Rashmawi				
Client:	Stantec				
Street Address:	3017 Kilgore Road, Suite 100				
City, State, Zip:	Rancho Cordova, CA 95670				
Telephone:	9167738100				
Fax:					
Project Name:	Pricing till 2015			**Project #:**	
SunStar Contact:	**Bill Hannell**				

Requested Parameters	Method	Matrix	QTY	TAT	Unit Price	Total Price
Standard TAT Pricing						
Semi Volatiles	8270	Variety		5days	85.00	
VOC's	8260	Variety		3days	55.00	
CAM 17 Title 22 Metals	6010	Variety		5days	90.00	
TPH Diesel/ Motor Oil	8015M	Variety		3days	32.00	
Asbestos	600/r-93/116			5days	34.00	
24 Hour TAT Pricing						
Semi Volatiles	8270	Variety		24 hr	128.00	
VOC's	8260	Variety		24 hr	82.00	
CAM 17 Title 22 Metals	6010	Variety		24 hr	135.00	
TPH Diesel/ Motor Oil	8015M	Variety		24 hr	48.00	
Asbestos	600/r-93/116			24hr	44.00	
48 Hour TAT Pricing						
Semi Volatiles	8270	Variety		48 hr	115.00	
VOC's	8260	Variety		48 hr	74.00	
CAM 17 Title 22 Metals	6010	Variety		48 hr	122.00	
TPH Diesel/ Motor Oil	8015M	Variety		48 hr	43.00	
Asbestos	600/r-93/116			48hr	39.00	
72 Hour TAT Pricing						
Semi Volatiles	8270	Variety		72 hr	102.00	
VOC's	8260	Variety		72 hr	55.00	
CAM 17 Title 22 Metals	6010	Variety		72 hr	108.00	
TPH Diesel/ Motor Oil	8015M	Variety		72 hr	38.40	
Asbestos	600/r-93/116			72hr	36.00	
					Subtotal	$0.00
						$ -
					Total Analytical Cost	$ -

SunStar Client Services	Charge
Sample Containers/Coolers	Included*
COC Forms/Seals/Labels	Included
Preservatives/Blue Ice	Included
Standard Default Level QA/Q(	Included
Sample Disposal	Included**

For Sample Pick-Up, Contact Client Services at:
530-304-5525

Summary of Services

SUNSTAR LABORATORY

SunStar Laboratory, Inc.
25712 Commercentre Drive
Lake Forest, CA 92630
530-304-5525
916-372-7523 FAX
bill@sunstarlabs.com

CDPH
California Department of
PublicHealth

CALIFORNIA STATE

ENVIRONMENTAL LABORATORY ACCREDITATION PROGRAM BRANCH

CERTIFICATE OF ENVIRONMENTAL ACCREDITATION

Is hereby granted to

Sunstar Laboratories, Inc.

25712 Commercentre Drive

Lake Forest, CA 92630

Scope of the certificate is limited to the
"Fields of Testing"
which accompany this Certificate.

Continued accredited status depends on successful completion of on-site, proficiency testing studies, and payment of applicable fees.

This Certificate is granted in accordance with provisions of Section 100825, et seq. of the Health and Safety Code.

Certificate No.: **2250**

Expiration Date: **07/31/2014**

Effective Date: **08/01/2012**

Richmond, California
subject to forfeiture or revocation

David Mazzera, Ph.D., Assistant Division Chief
Division of Drinking Water and Environmental Management

CITY OF SACRAMENTO 10-H FORM

Approved with Supplement # (type Original if it is the Original): Original

CONTRACTOR Name: Mark Thomas & Company, Inc. **Date:** 2/11/2014

Project Name: West Tunnel Ramps Access Project

Project #: T15029032

Fringe Benefit %	+	*Overhead %	=	Combined %
138.04%		135.62%		273.66%

Profit %: 10.00%

[Actual Base Hourly Rate Paid to Employee + (Actual Base Hourly Rate Paid to Employee x Combined %)] = A

A x Profit % = B A + B = Actual Fully Loaded Hourly Rate

Key Staff	Prevailing Wage	Classification	Name	Actual Base Hourly Rate Paid to Employee For Reference Only (Does not include any Fringe or OH)	Actual Fully Loaded Hourly Rate For Reference Only (Includes Fringe, OH & Profit)	Approved Flat Hourly Billing Rate
X		Engineering Manager	Matt Brogan	$81.00	$332.93	$185.00
X		Project Manager	Ken Doty	$58.21	$239.26	$185.00
X		Project Engineer	Todd Lewis	$38.48	$158.16	$158.16
X		Senior Design Engineer	Jony Tji	$37.96	$156.03	$156.03
X		Design Engineer	Ruel Opada	$35.00	$143.86	$143.86
X		Eng/Survey/Cadd Technician	Janet Doty	$34.00	$139.75	$139.75
X		Design (Tech Assistant)	Spencer Ord	$13.00	$53.43	$53.43
X		Design (Tech Assistant)	Kira Davis	$13.00	$53.43	$53.43
					$0.00	$0.00

Total Other Direct Costs (ODC)	Estimated Total ODC Amount Shall Be	Description	Rate	Units	Total
			At Cost		
			At Cost		
				Estimated Total ODC Amount:	$0.00

1. List all Professional and Supervisory staff by Classification and Name. For staff not listed by name, a current payroll document identifying their actual base hourly rate shall be provided with every invoice that they are billing time to. The approved flat hourly billing rates for all employees will be calculated and reimbursed based on their actual base hourly rates per the date noted above. Unless CITY Project Manager assigns a fair and reasonable flat hourly billing rate for selected employees. Approved flat hourly billing rates for new employees hired after the date of this cost proposal will not exceed (or shall be in line with) the rates of similar personnel with similar experience listed on this cost proposal. The approved flat hourly billing rate shall be all-inclusive, including all mark-ups, fringe, and overhead expenses and profit.
2. Key Staff shall be determined by CITY Project Manager. (i.e. Project Manger, a specific Principal Engineer, a specific Structural Engineer, etc. Note Key staff with an "X" in the Key Staff column.
3. The employees' actual base hourly rates used to negotiate the flat hourly billing rates in this 10-H Form are the rates that were effective per the date noted above. Addition of new staff or addition of a SUBCONTRACTOR not previously listed on the approved 10-H Form(s) shall require an executed Supplement Agreement. No work shall commence until the Supplemental Agreement is executed and written notification has been provided by CITY Project Manager. New staff shall be paid at the same or lower approved flat hourly billing rate of the previously approved or similar classification. In addition, if the substitution involves Key Staff, CONTRACTOR must request and justify the need for the substitution and obtain approval from CITY Project Manager. Substituted Key Staff shall be as qualified as the original. The executed Supplemental Agreement shall include updated 10-H Forms for CONTRACTOR and SUBCONTRACTOR(S).
4. Approved flat hourly billing rates include all standard equipment including laptop, camera, cell phone, truck, standard personal safety equipment. CITY Project Manager shall approve any other direct costs.
5. Note employees/classifications that are subject to prevailing wage requirements with an "X" in the Prevailing Wage column. Prevailing Wage specified is based on current Department of Industrial Relations (DIR) determination. CONTRACTOR shall be responsible for any future adjustments to the prevailing wage, including but not limited to, base hourly rates and employer payments as determined by the DIR. CONTRACTOR is responsible for paying the appropriate rate, including escalations that take place during the term of the Agreement. CONTRACTOR shall be reimbursed at the above listed approved flat hourly billing rates.
6. Overtime may be reimbursed to classifications where it is required by their union contracts (Prevailing Wage classifications). Overtime will not be charged unless prior written approval is received by CITY Project Manager. CITY shall pay CONTRACTOR at the approved overtime rates noted above. CONTRACTOR shall pay prevailing wage employees per prevailing wage guidelines. For more information on applicable prevailing wages, please visit the following website: https://www.dir.ca.gov/OPRL/PWD/
7. Parking, tolls and local transportation costs resulting from commuting to and from the employee's residence to the job site are not reimbursable.
8. The Project will not reimburse CONTRACTOR for costs to relocate its staff to the geographic area of the contract. The Project will not reimburse CONTRACTOR for any per diem.
9. ODC items are to be in compliance with Code of Federal Regulations, Title 48 Part 31 [Federal Acquisition Regulations (FAR) cost principles] and the firm's company-wide allocation policies and charging practices with all clients including federal government, state government, local agencies and private clients.

By signing here, you agree to the terms above, and attest that all information is accurate and true.

R. M. Bro

CONTRACTOR/SUBCONTRACTOR Project Manager's Signature

(type/print name here): Matt Brogan

3/19/14

CITY OF SACRAMENTO 10-H FORM

Approved with Supplement # (type Original if it is the Original): Original

CONTRACTOR Name: ICF International Date: 1/22/2014

Project Name: West Tunnel Ramps Access Project

Project #: T15029032

Fringe Benefit %	+	Overhead %	=	Combined %
32.53%		141.94%		174.49%

Profit %: 0.00%

(Actual Base Hourly Rate Paid to Employee + (Actual Base Hourly Rate Paid to Employee x Combined %)) = A

A x Profit % = B A + B = Actual Fully Loaded Hourly Rate

Key Staff	Prevailing Wage	Classification	Name	Actual Base Hourly Rate Paid to Employee For Reference Only (Does not Include any Fringe or OH)	Actual Fully Loaded Hourly Rate For Reference Only (Includes Fringe, OH & Profit)	Approved Flat Hourly Billing Rate
X		Senior Consultant I	Christiaan Havelaar	$38.67	$114.64	$114.64
X		Associate Consultant II	Tina Sorvari	$28.38	$84.13	$84.13
X		Senior Consultant I	Robin Hoffman	$31.36	$92.97	$92.97
X		Associate Consultant II	Andrea Gueyger	$26.75	$79.30	$79.30
X		Associate Consultant I	William Leyva	$21.00	$62.25	$62.25
X		Associate Consultant III	Leila Harris	$28.24	$83.72	$83.72
X		Senior Consultant II	John Howe	$38.72	$114.79	$114.79
X		Senior Consultant I	Senh Saelee	$32.40	$96.05	$96.05
					$0.00	$0.00

Other Direct Costs (ODC)	Description	Rate	Units	Total
		At Cost		
		At Cost		
			Estimated Total ODC Amount:	$0.00

1. List all Professional and Supervisory staff by Classification and Name. For staff not listed by name, a current payroll document identifying their actual base hourly rate shall be provided with every invoice that they are billing time to. The approved flat hourly billing rates for all employees will be calculated and reimbursed based on their actual base hourly rates per the date noted above. Unless CITY Project Manager assigns a fair and reasonable flat hourly billing rate for selected employees. Approved flat hourly billing rates for new employees hired after the date of this cost proposal will not exceed (or shall be in line with) the rates of similar personnel with similar experience listed on this cost proposal. The approved flat hourly billing rate shall be all-inclusive, including all mark-ups, fringe, and overhead expenses and profit.
2. Key Staff shall be determined by CITY Project Manager. (i.e. Project Manger, a specific Principal Engineer, a specific Structural Engineer, etc. Note Key staff with an "X" in the Key Staff column.
3. The employees' actual base hourly rates used to negotiate the flat hourly billing rates in this 10-H Form are the rates that were effective per the date noted above. Addition of new staff or addition of a SUBCONTRACTOR not previously listed on the approved 10-H Form(s) shall require an executed Supplement Agreement. No work shall commence until the Supplemental Agreement is executed and written notification has been provided by CITY Project Manager. New staff shall be paid at the same or lower approved flat hourly billing rate of the previously approved or similar classification. In addition, if the substitution involves Key Staff, CONTRACTOR must request and justify the need for the substitution and obtain approval from CITY Project Manager. Substituted Key Staff shall be as qualified as the original. The executed Supplemental Agreement shall include updated 10-H Forms for CONTRACTOR and SUBCONTRACTOR(S).
4. Approved flat hourly billing rates include all standard equipment including laptop, camera, cell phone, truck, standard personal safety equipment. CITY Project Manager shall approve any other direct costs.
5. Note employees/classifications that are subject to prevailing wage requirements with an "X" in the Prevailing Wage column. Prevailing Wage specified is based on current Department of Industrial Relations (DIR) determination. CONTRACTOR shall be responsible for any future adjustments to the prevailing wage, including but not limited to, base hourly rates and employer payments as determined by the DIR. CONTRACTOR is responsible for paying the appropriate rate, including escalations that take place during the term of the Agreement. CONTRACTOR shall be reimbursed at the above listed approved flat hourly billing rates.
6. *Overtime may be reimbursed to classifications where it is required by their union contracts (Prevailing Wage classifications). Overtime will not be charged unless prior written approval is received by CITY Project Manager. CITY shall pay CONTRACTOR at the approved overtime rates noted above. CONTRACTOR shall pay prevailing wage employees per prevailing wage guidelines. For more information on applicable prevailing wages, please visit the following website: https://www.dir.ca.gov/OPRL/PWD/
7. Parking, tolls and local transportation costs resulting from commuting to and from the employee's residence to the job site are not reimbursable.
8. The Project will not reimburse CONTRACTOR for costs to relocate its staff to the geographic area of the contract. The Project will not reimburse CONTRACTOR for any per diem.
9. ODC items are to be in compliance with Code of Federal Regulations, Title 48 Part 31 [Federal Acquisition Regulations (FAR) cost principles] and the firm's company-wide allocation policies and charging practices with all clients including federal government, state government, local agencies and private clients.

By signing here, you agree to the terms above, and attest that all information is accurate and true.

CONTRACTOR/SUBCONTRACTOR Project Manager's Signature

(type/print name here) Christiaan Havelaar

CITY OF SACRAMENTO 10-H FORM

Approved with Supplement # (type Original if it is the Original): Original

CONTRACTOR Name: DCM Group Date: 1/21/2014

Project Name: West End Tunnel Access Ramps

Project #: T15029032

Fringe Benefit %	+	*Overhead %	=	Combined %
20.00%		45.00%		65.00%

Profit %: 8.00%

[Actual Base Hourly Rate Paid to Employee + (Actual Base Hourly Rate Paid to Employee x Combined %)] = A

A x Profit % = B A + B = Actual Fully Loaded Hourly Rate

Key Staff	Prevailing Wage	Classification	Name	Actual Base Hourly Rate Paid to Employee For Reference Only (Does not include any Fringe or OH)	Actual Fully Loaded Hourly Rate For Reference Only (Includes Fringe, OH & Profit)	Approved Flat Hourly Billing Rate
X		Project Manager/Field Monitor	Victoria Castaneda	$63.64	$113.41	$113.41
X		Lead Compliance Officer	Lindsey Kerfeld	$47.73	$85.05	$85.05
X		Contract Compliance /Analyst	Dina Dennis	$28.56	$50.89	$50.89
X		Contract Compliance /Analyst	Cheri Beck	$28.56	$50.89	$50.89
X		Contract Compliance/Analyst	Trevor Hoit	$28.56	$50.89	$50.89
X		Contract Compliance/Analyst	John Milesi	$28.56	$50.89	$50.89
					$0.00	$0.00
					$0.00	$0.00

Other Direct Costs (ODC)	Description	Rate	Units	Total
		At Cost		
			Estimated Total ODC Amount:	$0.00

1. List all Professional and Supervisory staff by Classification and Name For staff not listed by name, a current payroll document identifying their actual base hourly rate shall be provided with every invoice that they are billing time to. The approved flat hourly billing rates for all employees will be calculated and reimbursed based on their actual base hourly rates per the date noted above. Unless CITY Project Manager assigns a fair and reasonable flat hourly billing rate for selected employees Approved flat hourly billing rates for new employees hired after the date of this cost proposal will not exceed (or shall be in line with) the rates of similar personnel with similar experience listed on this cost proposal. The approved flat hourly billing rate shall be all-inclusive, including all mark-ups, fringe, and overhead expenses and profit
2. Key Staff shall be determined by CITY Project Manager. (i e. Project Manger, a specific Principal Engineer, a specific Structural Engineer, etc. Note Key staff with an "X" in the Key Staff column.
3. The employees' actual base hourly rates used to negotiate the flat hourly billing rates in this 10-H Form are the rates that were effective per the date noted above. Addition of new staff or addition of a SUBCONTRACTOR not previously listed on the approved 10-H Form(s) shall require an executed Supplement Agreement No work shall commence until the Supplemental Agreement is executed and written notification has been provided by CITY Project Manager New staff shall be paid at the same or lower approved flat hourly billing rate of the previously approved or similar classification. In addition, if the substitution involves Key Staff, CONTRACTOR must request and justify the need for the substitution and obtain approval from CITY Project Manager. Substituted Key Staff shall be as qualified as the original. The executed Supplemental Agreement shall include updated 10-H Forms for CONTRACTOR and SUBCONTRACTOR(S).
4. Approved flat hourly billing rates include all standard equipment including laptop. camera, cell phone, truck, standard personal safety equipment. CITY Project Manager shall approve any other direct costs.
5. Note employees/classifications that are subject to prevailing wage requirements with an "X" in the Prevailing Wage column. Prevailing Wage specified is based on current Department of Industrial Relations (DIR) determination. CONTRACTOR shall be responsible for any future adjustments to the prevailing wage, including but not limited to, base hourly rates and employer payments as determined by the DIR. CONTRACTOR is responsible for paying the appropriate rate, including escalations that take place during the term of the Agreement. CONTRACTOR shall be reimbursed at the above listed approved flat hourly billing rates.
6. *Overtime may be reimbursed to classifications where it is required by their union contracts (Prevailing Wage classifications) Overtime will not be charged unless prior written approval is received by CITY Project Manager. CITY shall pay CONTRACTOR at the approved overtime rates noted above. CONTRACTOR shall pay prevailing wage employees per prevailing wage guidelines. For more information on applicable prevailing wages, please visit the following website: https://www dir ca.gov/OPRL/PWD/
7. Parking, tolls and local transportation costs resulting from commuting to and from the employee's residence to the job site are not reimbursable.
8. The Project will not reimburse CONTRACTOR for costs to relocate its staff to the geographic area of the contract The Project will not reimburse CONTRACTOR for any per diem.
9. ODC items are to be in compliance with Code of Federal Regulations, Title 48 Part 31 [Federal Acquisition Regulations (FAR) cost principles] and the firm's company-wide allocation policies and charging practices with all clients including federal government. state government, local agencies and private clients

By signing here, you agree to the terms above, and attest that all information is accurate and true

CONTRACTOR/SUBCONTRACTOR Project Manager's Signature

Attachment 1 to Exhibit B

I. COMPENSATION AND PAYMENT

A. CONTRACTOR shall not commence performance until written "Notice to Proceed" has been issued by CITY Project Manager.

B. CONTRACTOR shall be reimbursed for services at the specific rate of compensation in the approved 10-H Form(s). The specified rates shall include direct/base hourly rate, fringe benefits, overhead, and profit.

C. CONTRACTOR shall be reimbursed for Other Direct Costs (ODC), other than services, as identified on the approved 10-H Form(s) with receipts for actual costs, not to exceed the total ODC budget listed on the approved 10-H Form(s).

D. CONTRACTOR shall comply with the State of California's General Prevailing Wage Rate requirements in accordance with California Labor Code, Section 1770, City Code 3.60.180, and all Federal, State, and local laws and ordinances applicable to the work. CONTRACTOR is responsible for any future adjustments to prevailing wage rates including, but not limited to, base hourly rates and employer payments as determined by the Department of Industrial Relations. CONTRACTOR is responsible for paying the appropriate rate, including escalations that take place during the term of the Agreement. Mistake, inadvertence, or neglect by CONTRACTOR in failing to pay the correct rates of prevailing wage will be remedied solely by CONTRACTOR and will not, under any circumstances, be considered as a basis of a claim against CITY on this Agreement.

E. Monthly Invoices

1. Invoices shall be made in arrears based on services provided at specific hourly rates and other direct cost(s) incurred per the approved 10-H Form(s).

2. CONTRACTOR AND SUBCONTRACTOR invoices shall be submitted using the City-template and include the following:
   a. A Work Plan Summary.
   b. A copy of all Other Direct Cost invoices and appropriate back up documentation, which is consistent with the approved 10-H Form(s), and does not exceed the total ODC budget.
   c. A copy of SUBCONTRACTOR invoices.

d. CONTRACTOR Project Manager's signature certifying that all charges have been reviewed and are in compliance with the contracted terms.
e. Copy of the letter from CITY Project Manager approving the overtime expenses for Prevailing Wage staff consistent with the approved 10-H Form(s).

3. For non-federally funded projects, CONTRACTOR shall meet the 5% Local Business Enterprise (LBE) participation requirement, unless an LBE waiver has been obtained by CITY Project Manager prior to the agreement being executed. CONTRACTOR will track LBE utilization and include the % achieved with each invoice. The 5% requirement only applies to those agreements awarded for a not-to-exceed amount over 100K.

4. For federally funded projects in compliance with 49 CFR 26.37, a Disadvantaged Business Enterprises Utilization Report (Form ADM-3069) is required, as specified in this Agreement.

5. CONTRACTOR may include SUBCONTRACTOR costs that are treated by the CONTRACTOR as accrued due to such costs having been billed by the SUBCONTRACTOR to CONTRACTOR and recognized by CONTRACTOR and CITY as valid, undisputed, due and payable.

6. CONTRACTOR shall not add a mark-up to SUBCONTRACTOR or other direct costs included in the approved 10-H form(s).

7. Invoices for approved monthly services shall be submitted by CONTRACTOR and received by CITY Project Manager within 45 calendar days of the completion of the approved monthly services specified in the Work Plan Summary.

F. SUPPLEMENTAL AGREEMENTS

No changes to the total contract amount within the approved scope of work, re-allocation of task budgets, contract expiration date and changes/additions of personnel or SUBCONTRACTORS shall be made or be payable without Supplemental Agreement approved by CITY. No work shall commence until the Supplemental Agreement is executed and written notification has been provided by CITY Project Manager. Any work performed prior to the date of the execution of the Supplemental Agreement shall not be reimbursed. Supplemental Agreements are required for any changes to the scope and terms of the agreement, including but not limited to the following:

1. Increasing the Agreement not-to-exceed amount.

a. Any increase to the not-to-exceed amount shall include a cost proposal documenting the increase.

2. Adding task(s) within the advertised scope.

3. Changes to the total Other Direct Costs (ODC) budgets

4. Any changes or additions to staff outside of the CITY Project-Manager approved substitutions per the Agreement for classifications that are paid at rates established on the current 10-H. (This shall override the standard language on footnote 3 on the 10-H forms)
   a. Updated 10-H Form(s) for CONTRACTOR and all SUBCONTRACTORS shall be included.
   b. Any addition or substitution shall be paid at the same or lower rate of the previously approved or similar classification.
   c. If substitution involves Key Staff, CONTRACTOR shall request and justify the need for substitution and obtain written approval from CITY Project Manager. The justification shall include a resume of the proposed new Key Staff.

5. Adding SUBCONTRACTORS.

6. Extending the sunset date of the Agreement.

II. COST PRINCIPLES

A. All costs must be applied consistently and fairly to all contracts. All documentation of compliance must be retained in the project files.

B. For federally funded projects, all costs must be in accordance with the cost principles of Title 48 Code of Federal Regulations (CFR), Part 31, Contract Cost Principles and Procedures (48 CFR 31 et seq.).

C. For federally funded projects, CONTRACTOR shall comply with federal procedures in accordance with Title 49 CFR, Part 18, Uniform Administrative Requirements for Grants and Cooperative Agreements to State and Local Governments (49 CFR 18).

D. Any costs for which payment had been made to CONTRACTOR that are determined by subsequent audit to be unallowable under 48 CFR 31 or 49 CFR 18, are subject to repayment by CONTRACTOR to CITY.

III. CONFLICT OF INTEREST

A. CONTRACTOR shall disclose any financial, business, or other relationship with CITY that may have an impact upon the outcome of this contract, or any ensuing CITY construction project. CONTRACTOR shall list current clients who may have a financial interest in the outcome of this contract, or any ensuing CITY construction project, which will follow.

B. CONTRACTOR certifies that it does not now have, nor shall it acquire in the future, any financial or business interest that would conflict with the performance of services under this contract.

C. Any subcontract entered into as a result of this contract, shall contain all of the provisions of this Article III.

D. CONTRACTOR certifies that neither CONTRACTOR, nor any firm affiliated with CONTRACTOR will bid on any construction contract, or on any contract to provide construction inspection for any construction project resulting from this contract. An affiliated firm is one, which is subject to the control of the same persons through joint-ownership, or otherwise.

E. Except for SUBCONTRACTORS whose services are limited to providing surveying or materials testing information, no SUBCONTRACTOR who has provided design services in connection with this contract shall be eligible to bid on any construction contract, or on any contract to provide construction inspection for any construction project resulting from this contract.

IV PROVISIONS FOR REBATES, KICKBACKS OR OTHER UNLAWFUL CONSIDERATION

CONTRACTOR warrants that this contract was not obtained or secured through rebates kickbacks or other unlawful consideration, either promised or paid to any CITY employee. In the event of breach or violation of this warranty, CITY shall have the right in its discretion: to terminate the contract without liability; to pay only for the value of the work actually performed; or to deduct from the contract price; or otherwise recover the full amount of such rebate, kickback or other unlawful consideration.

V. PROHIBITION OF EXPENDING CITY STATE OR FEDERAL FUNDS FOR LOBBYING

A. CONTRACTOR certifies to the best of his or her knowledge and belief that:

1. No state, federal or CITY appropriated funds have been paid, or will be paid by-or-on behalf of CONTRACTOR to any person for influencing or attempting to influence an officer or employee of any state or federal agency; a Member of the State Legislature or United States Congress; an officer or employee of the Legislature or Congress; or any employee of a Member of the Legislature or Congress, in connection with the awarding of any state or federal contract; the making of any state or federal grant; the making of any state or federal loan; the entering into of any cooperative agreement, and the extension, continuation, renewal, amendment, or modification of any state or federal contract, grant, loan, or cooperative agreement.
2. If any funds other than federal appropriated funds have been paid, or will be paid to any person for influencing or attempting to influence an officer or employee of any federal agency; a Member of Congress; an officer or employee of Congress, or an employee of a Member of Congress; in connection with this federal contract, grant, loan, or cooperative agreement; CONTRACTOR shall complete and submit Standard Form-LLL, "Disclosure Form to Report Lobbying", in accordance with its instructions.

B. This certification is a material representation of fact upon which reliance was placed when this transaction was made or entered into. Submission of this certification is a prerequisite for making or entering into this transaction imposed by Section 1352, Title 31, US. Code. Any person who fails to file the required certification shall be subject to a civil penalty of not less than $10,000 and not more than $100,000 for each such failure.

C. CONTRACTOR also agrees by signing this document that he or she shall require that the language of this certification be included in all lower-tier subcontracts, which exceed $100,000, and that all such sub recipients shall certify and disclose accordingly.

VI AUDIT REVIEW PROCEDURES

A. Any dispute concerning a question of fact arising under an interim or post audit of this contract that is not disposed of by agreement, shall be reviewed by CITY'S Chief Financial Officer.

B. Not later than 30 days after issuance of the final audit report, CONTRACTOR may request a review by CITY'S Chief Financial Officer of unresolved audit issues. The request for review will be submitted in writing.

C. Neither the pendency of a dispute nor its consideration by CITY will excuse CONTRACTOR from full and timely performance, in accordance with the terms of this contract.

D. CONTRACTOR and SUBCONTRACTORS' contracts, including cost proposals and indirect cost rates (ICR), are subject to audits or reviews such as, but not limited to, a Contract Audit, an Incurred Cost Audit, an ICR Audit, or a certified public accountant (CPA) ICR Audit Workpaper Review. If selected for audit or review, the contract, cost proposal and ICR and related workpapers, if applicable, will be reviewed to verify compliance with 48 CFR, Part 31 and other related laws and regulations. In the instances of a CPA ICR Audit Workpaper Review it is CONTRACTOR's responsibility to ensure federal, state, or local government officials are allowed full access to the CPA's workpapers. The contract, cost proposal, and ICR shall be adjusted by CONTRACTOR and approved by CITY contract manager to conform to the audit or review recommendations. CONTRACTOR agrees that individual terms of costs identified in the audit report shall be incorporated into the contract by this reference if directed by CITY at its sole discretion. Refusal by CONTRACTOR to incorporate audit or review recommendations, or to ensure that the Federal, State, or local governments have access to CPA workpapers, will be considered a breach of contract terms and cause for termination of the contract and disallowance of prior reimbursed costs.

VI. SUBCONTRACTING

A. CONTRACTOR shall perform the work contemplated with resources available within its own organization; and no portion of the work pertinent to this contract shall be subcontracted without written authorization by CITY'S Contract Administrator, except that, which is expressly identified in the approved Cost Proposal.

B. Any subcontract entered into as a result of this contract, shall contain all the provisions stipulated in this contract to be applicable to SUBCONTRACTORS.

C. Any substitution of SUBCONTRACTORS must be approved in writing by CITY's Contract Administrator prior to the start of work by the SUBCONTRACTOR.

VII. RETENTION OF RECORDS/AUDIT

A. For the purpose of determining compliance with Public Contract Code 10115, et seq. and Title 21, California Code of Regulations, Chapter 21, Section 2500 et seq., when applicable and other matters connected with the performance of the contract pursuant to Government Code 8546.7; CONTRACTOR, SUBCONTRACTORS, and CITY shall maintain and make available for inspection all books, documents, papers, accounting records, and other evidence pertaining to the performance of the contract, including but not limited to, the costs of administering the contract. All parties shall make such materials available at their respective offices at all reasonable times during the contract period and for three years from the date of final payment under the contract. The state, State Auditor, CITY, FHWA, or any duly authorized representative of the Federal Government shall have access to any books, records, and documents of CONTRACTORS that are pertinent to the contract for audit, examinations, excerpts, and transactions, and copies thereof shall be furnished if requested. All subcontracts shall contain this provision.

***All referenced forms and sample templates will be provided by CITY.**

EXHIBIT C

PROFESSIONAL SERVICES AGREEMENT FOR DESIGN PROFESSIONALS

FACILITIES AND EQUIPMENT TO BE PROVIDED BY CITY

CITY shall [*check one*] ✓ Not furnish any facilities or equipment for this Agreement; or

____ furnish the following facilities or equipment for the Agreement [*list, if applicable*]:

EXHIBIT D

PROFESSIONAL SERVICES AGREEMENT FOR DESIGN PROFESSIONALS

GENERAL PROVISIONS

1. Independent Contractor.

A. It is understood and agreed that CONTRACTOR (including CONTRACTOR's employees) is an independent contractor and that no relationship of employer-employee exists between the parties hereto for any purpose whatsoever. Neither CONTRACTOR nor CONTRACTOR's assigned personnel shall be entitled to any benefits payable to employees of CITY. CITY is not required to make any deductions or withholdings from the compensation payable to CONTRACTOR under the provisions of this Agreement, and CONTRACTOR shall be issued a Form 1099 for its services hereunder. As an independent contractor, CONTRACTOR hereby agrees to indemnify and hold CITY harmless from any and all claims that may be made against CITY based upon any contention by any of CONTRACTOR's employees or by any third party, including but not limited to any state or federal agency, that an employer-employee relationship or a substitute therefor exists for any purpose whatsoever by reason of this Agreement or by reason of the nature and/or performance of any Services under this Agreement. (As used in this Exhibit D, the term "Services" shall include both Services and Additional Services as such terms are defined elsewhere in this Agreement.)

B. It is further understood and agreed by the parties hereto that CONTRACTOR, in the performance of its obligations hereunder, is subject to the control and direction of CITY as to the designation of tasks to be performed and the results to be accomplished under this Agreement, but not as to the means, methods, or sequence used by CONTRACTOR for accomplishing such results. To the extent that CONTRACTOR obtains permission to, and does, use CITY facilities, space, equipment or support services in the performance of this Agreement, this use shall be at the CONTRACTOR's sole discretion based on the CONTRACTOR's determination that such use will promote CONTRACTOR's efficiency and effectiveness. Except as may be specifically provided elsewhere in this Agreement, the CITY does not require that CONTRACTOR use CITY facilities, equipment or support services or work in CITY locations in the performance of this Agreement.

C. If, in the performance of this Agreement, any third persons are employed by CONTRACTOR, such persons shall be entirely and exclusively under the direction, supervision, and control of CONTRACTOR. Except as may be specifically provided elsewhere in this Agreement, all terms of employment, including hours, wages, working conditions, discipline, hiring, and discharging, or any other terms of employment or requirements of law, shall be determined by CONTRACTOR. It is further understood and agreed that CONTRACTOR shall issue W-2 or 1099 Forms for income and employment tax purposes, for all of CONTRACTOR's assigned personnel and subcontractors.

D. The provisions of this Section 1 shall survive any expiration or termination of this Agreement. Nothing in this Agreement shall be construed to create an exclusive relationship between CITY and CONTRACTOR. CONTRACTOR may represent, perform services for, or be employed by such additional persons or companies as CONTRACTOR sees fit provided that CONTRACTOR does not violate the provisions of Section 5, below.

2. **Licenses; Permits, Etc.** CONTRACTOR represents and warrants that CONTRACTOR has all licenses, permits, City Business Operations Tax Certificate, qualifications, and approvals of whatsoever nature that are legally required for CONTRACTOR to practice its profession or provide any services under the Agreement. CONTRACTOR represents and warrants that CONTRACTOR shall, at its sole cost and expense, keep in effect or obtain at all times during the term of this Agreement any licenses, permits, and approvals that are legally required for CONTRACTOR to practice its profession or provide such Services. Without limiting the generality of the foregoing, if CONTRACTOR is an out-of-state corporation, CONTRACTOR warrants and represents that it possesses a valid certificate of qualification to transact business in the State of California issued by the California Secretary of State pursuant to Section 2105 of the California Corporations Code.

3. **Time.** CONTRACTOR shall devote such time and effort to the performance of Services pursuant to this Agreement as is necessary for the satisfactory and timely performance of CONTRACTOR's obligations under this Agreement. Neither party shall be considered in default of this Agreement, to the extent that party's performance is prevented or delayed by any cause, present or future, that is beyond the reasonable control of that party.

4. **CONTRACTOR Not Agent.** Except as CITY may specify in writing, CONTRACTOR and CONTRACTOR's personnel shall have no authority, express or implied, to act on behalf of CITY in any capacity whatsoever as an agent. CONTRACTOR and CONTRACTOR's personnel shall have no authority, express or implied, to bind CITY to any obligations whatsoever.

5. **Conflicts of Interest.** CONTRACTOR covenants that neither it, nor any officer or principal of its firm, has or shall acquire any interest, directly or indirectly, that would conflict in any manner with the interests of CITY or that would in any way hinder CONTRACTOR's performance of Services under this Agreement. CONTRACTOR further covenants that in the performance of this Agreement, no person having any such interest shall be employed by it as an officer, employee, agent or subcontractor, without the written consent of CITY. CONTRACTOR agrees to avoid conflicts of interest or the appearance of any conflicts of interest with the interests of CITY at all times during the performance of this Agreement. If CONTRACTOR is or employs a former officer or employee of the CITY, CONTRACTOR and any such employee(s) shall comply with the provisions of Sacramento City Code Section 2.16.090 pertaining to appearances before the City Council or any CITY department, board, commission or committee.

6. **Confidentiality of CITY Information.** During performance of this Agreement, CONTRACTOR may gain access to and use CITY information regarding inventions, machinery, products, prices, apparatus, costs, discounts, future plans, business affairs, governmental affairs, processes, trade secrets, technical matters, systems, facilities, customer lists, product design, copyright, data, and other vital information (hereafter collectively referred to as "City Information") that are valuable, special and unique assets of the CITY. CONTRACTOR agrees to protect all City Information and treat it as strictly confidential, and further agrees that CONTRACTOR shall not at any time, either directly or indirectly, divulge, disclose or communicate in any manner any City Information to any third party without the prior written consent of CITY. In addition, CONTRACTOR shall comply with all CITY policies governing the use of the CITY network and technology systems, as set forth in applicable provisions of the City of Sacramento Administrative Policy Instructions # 30. A violation by CONTRACTOR of this Section 6 shall be a material violation of this Agreement and shall justify legal and/or equitable relief.

7. **CONTRACTOR Information.**

A. CITY shall have full ownership and control, including ownership of any copyrights, of all information prepared, produced, or provided by CONTRACTOR pursuant to this Agreement. In this Agreement, the term "information" shall be construed to mean and include: any and all work product, submittals, reports, plans, specifications, and other deliverables consisting of documents, writings, handwritings, typewriting, printing, photostatting, photographing, computer models, and any other computerized data and every other means of recording any form of information, communications, or representation, including letters, works, pictures, drawings, sounds, or symbols, or any combination thereof. CONTRACTOR shall not be responsible for any unauthorized modification or use of such information for other than its intended purpose by CITY.

B. CONTRACTOR shall fully defend, indemnify and hold harmless CITY, its officers and employees, and each and every one of them, from and against any and all claims, actions, lawsuits or other proceedings alleging that all or any part of the information prepared, produced, or provided by CONTRACTOR pursuant to this Agreement infringes upon any third party's trademark, trade name, copyright, patent or other intellectual property rights. CITY shall make reasonable efforts to notify CONTRACTOR not later than ten (10) days after CITY is served with any such claim, action, lawsuit or other proceeding, provided that CITY's failure to provide such notice within such time period shall not relieve CONTRACTOR of its obligations hereunder, which shall survive any termination or expiration of this Agreement.

C. All proprietary and other information received from CONTRACTOR by CITY, whether received in connection with CONTRACTOR's proposal to CITY or in connection with any Services performed by CONTRACTOR, will be disclosed upon receipt of a request for disclosure, pursuant to the California Public Records Act; provided, however, that, if any information is set apart and clearly marked "trade secret" when it is provided to CITY, CITY shall give notice to CONTRACTOR of any request for the disclosure of such information. The CONTRACTOR shall then have five (5) days from the date it receives such notice to enter into an agreement with the CITY, satisfactory to the City Attorney, providing for the defense of, and complete indemnification and reimbursement for all costs (including plaintiff's attorney fees) incurred by CITY in any legal action to compel the disclosure of such information under the California Public Records Act. The CONTRACTOR shall have sole responsibility for defense of the actual "trade secret" designation of such information.

D. The parties understand and agree that any failure by CONTRACTOR to respond to the notice provided by CITY and/or to enter into an agreement with CITY, in accordance with the provisions of subsection C, above, shall constitute a complete waiver by CONTRACTOR of any rights regarding the information designated "trade secret" by CONTRACTOR, and such information shall be disclosed by CITY pursuant to applicable procedures required by the Public Records Act.

8. **Standard of Performance.** CONTRACTOR shall perform all Services required pursuant to this Agreement in the manner and according to the standards currently observed by a competent practitioner of CONTRACTOR's profession in California. All products of whatsoever nature that CONTRACTOR delivers to CITY pursuant to this Agreement shall be prepared in a professional manner and conform to the

standards of quality normally observed by a person currently practicing in CONTRACTOR's profession, and shall be provided in accordance with any schedule of performance specified in Exhibit A. CONTRACTOR shall assign only competent personnel to perform Services pursuant to this Agreement. CONTRACTOR shall notify CITY in writing of any changes in CONTRACTOR's staff assigned to perform the Services required under this Agreement, prior to any such performance. In the event that CITY, at any time during the term of this Agreement, desires the removal of any person assigned by CONTRACTOR to perform Services pursuant to this Agreement, because CITY, in its sole discretion, determines that such person is not performing in accordance with the standards required herein, CONTRACTOR shall remove such person immediately upon receiving notice from CITY of the desire of CITY for the removal of such person.

9. Term; Suspension; Termination.

A. This Agreement shall become effective on the date that it is approved by both parties, set forth on the first page of the Agreement, and shall continue in effect until both parties have fully performed their respective obligations under this Agreement, unless sooner terminated as provided herein.

B. CITY shall have the right at any time to temporarily suspend CONTRACTOR's performance hereunder, in whole or in part, by giving a written notice of suspension to CONTRACTOR. If CITY gives such notice of suspension, CONTRACTOR shall immediately suspend its activities under this Agreement, as specified in such notice.

C. CITY shall have the right to terminate this Agreement at any time by giving a written notice of termination to CONTRACTOR. If CITY gives such notice of termination, CONTRACTOR shall immediately cease rendering Services pursuant to this Agreement. If CITY terminates this Agreement:

(1) CONTRACTOR shall, not later than five days after such notice of termination, deliver to CITY copies of all information prepared pursuant to this Agreement.

(2) CITY shall pay CONTRACTOR the reasonable value of Services rendered by CONTRACTOR prior to termination; provided, however, CITY shall not in any manner be liable for lost profits that might have been made by CONTRACTOR had the Agreement not been terminated or had CONTRACTOR completed the Services required by this Agreement. In this regard, CONTRACTOR shall furnish to CITY such financial information as in the judgment of the CITY is necessary for CITY to determine the reasonable value of the Services rendered by CONTRACTOR. The foregoing is cumulative and does not affect any right or remedy that CITY may have in law or equity.

10. Indemnity.

A. Indemnity: CONTRACTOR shall defend, hold harmless and indemnify CITY, its officers and employees, and each and every one of them, from and against any and all claims, actions, damages, costs, liabilities, demands, losses, judgments, penalties and expenses of every type and description, including, but not limited to, any fees and/or costs reasonably incurred by CITY's staff attorneys or outside attorneys and any fees and expenses incurred in enforcing this

provision (hereafter collectively referred to as "Claims"), including but not limited to Claims arising from personal injury or death, damage to personal, real, or intellectual property, or the environment, contractual or other economic damages, or regulatory penalties, that arise out of, pertain to, or relate to any negligent act or omission, recklessness, or willful misconduct of CONTRACTOR, its sub-consultants, subcontractors, or agents, and their respective officers and employees, in connection with performance of or failure to perform this Agreement, whether or not such Claims are litigated, settled, or reduced to judgment; provided that the foregoing indemnity does not apply to liability for damages for death or bodily injury to persons, injury to property, or other loss, damage, or expense to the extent arising from (i) the sole negligence or willful misconduct of, or defects in design furnished by, CITY, its agents, servants, or independent contractors who are directly responsible to CITY, or (ii) the active negligence of CITY.

B. Insurance Policies; Intellectual Property Claims: The existence or acceptance by CITY of any of the insurance policies or coverages described in this Agreement shall not affect or limit any of CITY's rights under this Section 10, nor shall the limits of such insurance limit the liability of CONTRACTOR hereunder. This Section 10 shall not apply to any intellectual property claims, actions, lawsuits, or other proceedings subject to the provisions of Section 7.B., above. The provisions of this Section 10 shall survive any expiration or termination of this Agreement.

11. Insurance Requirements. During the entire term of this Agreement, CONTRACTOR shall maintain the insurance coverage described in this Section 11.

Full compensation for all premiums that CONTRACTOR is required to pay for the insurance coverage described herein shall be included in the compensation specified for the Services provided by CONTRACTOR under this Agreement. No additional compensation will be provided for CONTRACTOR's insurance premiums.

It is understood and agreed by the CONTRACTOR that its liability to the CITY shall not in any way be limited to or affected by the amount of insurance coverage required or carried by the CONTRACTOR in connection with this Agreement.

A. Minimum Scope & Limits of Insurance Coverage

(1) Commercial General Liability Insurance, providing coverage at least as broad as ISO CGL Form 00 01 on an occurrence basis for bodily injury, including death, of one or more persons, property damage and personal injury, with limits of not less than one million dollars ($1,000,000) per occurrence. The policy shall provide contractual liability and products and completed operations coverage for the term of the policy.

(2) Automobile Liability Insurance providing coverage at least as broad as ISO Form CA 00 01 on an occurrence basis for bodily injury, including death, of one or more persons, property damage and personal injury, with limits of not less than one million dollars ($1,000,000) per occurrence. The policy shall provide coverage for owned, non-owned and/or hired autos as appropriate to the operations of the CONTRACTOR.

No automobile liability insurance shall be required if CONTRACTOR completes the following certification:

> "I certify that a motor vehicle will not be used in the performance of any work or services under this agreement." _____ (CONTRACTOR initials)

(3) Workers' Compensation Insurance with statutory limits, and Employers' Liability Insurance with limits of not less than one million dollars ($1,000,000). The Worker's Compensation policy shall include a waiver of subrogation for contracts involving construction or maintenance, or if required by the CITY by selecting the option below:

> ✓ Workers' Compensation waiver of subrogation in favor of the City is required for all work performed by the CONTRACTOR.

No Workers' Compensation insurance shall be required if CONTRACTOR completes the following certification:

> "I certify that my business has no employees, and that I do not employ anyone. I am exempt from the legal requirements to provide Workers' Compensation insurance." _____ (CONTRACTOR initials)

(4) Professional Liability Insurance providing coverage on a claims made basis for errors, omissions or malpractice with limits of not less than one million ($1,000,000) dollars if required by the CITY under Exhibit A, Section 2.

B. Additional Insured Coverage

(1) Commercial General Liability Insurance: The CITY, its officials, employees and volunteers shall be covered by policy terms or endorsement as additional insureds as respects general liability arising out of activities performed by or on behalf of CONTRACTOR, products and completed operations of CONTRACTOR, and premises owned, leased or used by CONTRACTOR. The general liability additional insured endorsement must be signed by an authorized representative of the insurance carrier for contracts involving construction or maintenance, or if required by the CITY by selecting the option below:

> ✓ Additional insured endorsement must be signed by an authorized representative of the insurance carrier.

If the policy includes a blanket additional insured endorsement or contractual additional insured coverage, the above signature requirement may be fulfilled by submitting that document with a signed declaration page referencing the blanket endorsement or policy form.

(2) Automobile Liability Insurance: The CITY, its officials, employees and volunteers shall be covered by policy terms or endorsement as additional insureds as respects auto liability.

C. Other Insurance Provisions

The policies are to contain, or be endorsed to contain, the following provisions:

(1) Except for professional liability, CONTRACTOR's insurance coverage shall be primary insurance as respects CITY, its officials, employees and volunteers. Any insurance or self-insurance maintained by CITY, its officials, employees or volunteers shall be in excess of CONTRACTOR's insurance and shall not contribute with it.

(2) Any failure to comply with reporting provisions of the policies shall not affect coverage provided to CITY, its officials, employees or volunteers.

(3) Coverage shall state that CONTRACTOR's insurance shall apply separately to each insured against whom claim is made or suit is brought, except with respect to the limits of the insurer's liability.

(4) CITY will be provided with thirty (30) days written notice of cancellation or material change in the policy language or terms.

D. Acceptability of Insurance

Insurance shall be placed with insurers with a Bests' rating of not less than A:V. Self-insured retentions, policy terms or other variations that do not comply with the requirements of this Section 11 must be declared to and approved by the CITY Risk Management Division in writing prior to execution of this Agreement.

E. Verification of Coverage

(1) CONTRACTOR shall furnish CITY with certificates and required endorsements evidencing the insurance required. The certificates and endorsements shall be forwarded to the CITY representative named in Exhibit A. Copies of policies shall be delivered to the CITY on demand. Certificates of insurance shall be signed by an authorized representative of the insurance carrier.

(2) The CITY may withdraw its offer of contract or cancel this Agreement if the certificates of insurance and endorsements required have not been provided prior to execution of this Agreement. The CITY may withhold payments to CONTRACTOR and/or cancel the Agreement if the insurance is canceled or CONTRACTOR otherwise ceases to be insured as required herein.

F. Subcontractors

CONTRACTOR shall require and verify that all sub-consultants and subcontractors maintain insurance coverage that meets the minimum scope and limits of insurance coverage specified in subsection A, above.

12. Equal Employment Opportunity. During the performance of this Agreement, CONTRACTOR, for itself, its assignees and successors in interest, agrees as follows:

A. Compliance With Regulations: CONTRACTOR shall comply with the Executive Order 11246 entitled "Equal Opportunity in Federal Employment", as amended by Executive Order 11375 and 12086, and as supplemented in Department of Labor regulations (41 CFR Chapter 60), hereinafter collectively referred to as the "Regulations".

B. Nondiscrimination: CONTRACTOR, with regards to the work performed by it after award and prior to completion of the work pursuant to this Agreement, shall not discriminate on the ground of race, color, religion, sex, national origin, age, marital status, physical handicap or sexual orientation in selection and retention of subcontractors, including procurement of materials and leases of equipment. CONTRACTOR shall not participate either directly or indirectly in discrimination prohibited by the Regulations.

C. Solicitations for Subcontractors, Including Procurement of Materials and Equipment: In all solicitations either by competitive bidding or negotiations made by CONTRACTOR for work to be performed under any subcontract, including all procurement of materials or equipment, each potential subcontractor or supplier shall be notified by CONTRACTOR of CONTRACTOR's obligation under this Agreement and the Regulations relative to nondiscrimination on the ground of race, color, religion, sex, national origin, age, marital status, physical handicap or sexual orientation.

D. Information and Reports: CONTRACTOR shall provide all information and reports required by the Regulations, or by any orders or instructions issued pursuant thereto, and shall permit access to its books, records, accounts, other sources of information and its facilities as may be determined by the CITY to be pertinent to ascertain compliance with such Regulations, orders and instructions. Where any information required of CONTRACTOR is in the exclusive possession of another who fails or refuses to furnish this information, CONTRACTOR shall so certify to the CITY, and shall set forth what efforts it has made to obtain the information.

E. Sanctions for Noncompliance: In the event of noncompliance by CONTRACTOR with the nondiscrimination provisions of this Agreement, the CITY shall impose such sanctions as it may determine to be appropriate including, but not limited to:

(1) Withholding of payments to CONTRACTOR under this Agreement until CONTRACTOR complies;

(2) Cancellation, termination, or suspension of the Agreement, in whole or in part.

F. Incorporation of Provisions: CONTRACTOR shall include the provisions of subsections A through E, above, in every subcontract, including procurement of materials and leases of equipment, unless exempted by the Regulations, or by any order or instructions issued pursuant thereto. CONTRACTOR shall take such action with respect to any subcontract or procurement as the CITY may direct as a means of enforcing such provisions including sanctions for noncompliance; provided, however, that in the event CONTRACTOR becomes involved in, or is threatened with, litigation with a subcontractor or supplier as a result of such direction, CONTRACTOR may request CITY to enter such litigation to protect the interests of CITY.

13. **Entire Agreement.** This document, including all Exhibits, contains the entire agreement between the parties and supersedes whatever oral or written understanding they may have had prior to the execution of this Agreement. No alteration to the terms of this Agreement shall be valid unless approved in writing by CONTRACTOR, and by CITY, in accordance with applicable provisions of the Sacramento City Code.

14. **Severability.** If any portion of this Agreement or the application thereof to any person or circumstance shall be held invalid or unenforceable, the remainder of this Agreement shall not be affected thereby and shall be enforced to the greatest extent permitted by law.

15. **Waiver.** Neither CITY acceptance of, or payment for, any Service or Additional Service performed by CONTRACTOR, nor any waiver by either party of any default, breach or condition precedent, shall be construed as a waiver of any provision of this Agreement, nor as a waiver of any other default, breach or condition precedent or any other right hereunder.

16. **Enforcement of Agreement.** This Agreement shall be governed, construed and enforced in accordance with the laws of the State of California. Venue of any litigation arising out of or connected with this Agreement shall lie exclusively in the state trial court or Federal District Court located in Sacramento County in the State of California, and the parties consent to jurisdiction over their persons and over the subject matter of any such litigation in such courts, and consent to service of process issued by such courts.

17. **Assignment Prohibited.** The expertise and experience of CONTRACTOR are material considerations for this Agreement. CITY has a strong interest in the qualifications and capability of the persons and entities that will fulfill the obligations imposed on CONTRACTOR under this Agreement. In recognition of this interest, CONTRACTOR shall not assign any right or obligation pursuant to this Agreement without the written consent of the CITY. Any attempted or purported assignment without CITY's written consent shall be void and of no effect.

18. **Binding Effect.** This Agreement shall be binding on the heirs, executors, administrators, successors and assigns of the parties, subject to the provisions of Section 17, above.

19. **Use Tax Requirements.** During the performance of this Agreement, CONTRACTOR, for itself, its assignees and successors in interest, agrees as follows:

    A. Use Tax Direct Payment Permit: For all leases and purchases of materials, equipment, supplies, or other tangible personal property used to perform the Agreement and shipped from outside California, the Contractor and any subcontractors leasing or purchasing such materials, equipment, supplies or other tangible personal property shall obtain a Use Tax Direct Payment Permit from the California State Board of Equalization ("SBE") in accordance with the applicable SBE criteria and requirements.

    B. Sellers Permit: For any construction contract and any construction subcontract in the amount of $5,000,000 or more, Contractor and the subcontractor(s) shall obtain sellers permits from the SBE and shall register the jobsite as the place of business for the purpose of allocating local sales and use tax to the City. Contractor and its subcontractors shall remit the self-accrued use tax to the SBE, and shall provide a copy of each remittance to the City.

C. The above provisions shall apply in all instances unless prohibited by the funding source for the Agreement.

EXHIBIT E

REQUIREMENTS OF THE NON-DISCRIMINATION IN EMPLOYEE BENEFITS CODE

INTRODUCTION

The Sacramento Non-Discrimination In Employee Benefits Code (the "Ordinance"), codified as Sacramento City Code Chapter 3.54, prohibits City contractors from discriminating in the provision of employee benefits between employees with spouses and employees with domestic partners, and between the spouses and domestic partners of employees.

APPLICATION

The provisions of the Ordinance apply to any contract or agreement (as defined below), between a Contractor and the City of Sacramento, in an amount exceeding $100,000.00. The Ordinance applies to that portion of a contractor's operations that occur: (i) within the City of Sacramento; (ii) on real property outside the City of Sacramento if the property is owned by the City or if the City has a right to occupy the property; or (iii) at any location where a significant amount of work related to a City contract is being performed.

The Ordinance does not apply: to subcontractors or subcontracts of any Contractor or contractors; to transactions entered into pursuant to cooperative purchasing agreements approved by the Sacramento City Council; to legal contracts of other governmental jurisdictions or public agencies without separate competitive bidding by the City; where the requirements of the ordinance will violate or are inconsistent with the terms or conditions of a grant, subvention or agreement with a public agency or the instructions of an authorized representative of any such agency with respect to any such grant, subvention or agreement; to permits for excavation or street construction; or to agreements for the use of City right-of-way where a contracting utility has the power of eminent domain.

DEFINITIONS

As set forth in the Ordinance, the following definitions apply:

"Contract" means an agreement for public works or improvements to be performed, or for goods or services to be purchased or grants to be provided, at the expense of the City or to be paid out of moneys deposited in the treasury or out of the trust money under the control or collected by the City. "Contract" also means a written agreement for the exclusive use ("exclusive use" means the right to use or occupy real property to the exclusion of others, other than the right reserved by the fee owner) or occupancy of real property for a term exceeding 29 days in any calendar year, whether by singular or cumulative instrument, (i) for the operation or use by others of real property owned or controlled by the City for the operation of a business, social, or other establishment or organization, including leases, concessions, franchises and easements, or (ii) for the City's use or occupancy of real property owned by others, including leases, concessions, franchises and easements.

"Contract" shall not include: a revocable at-will use or encroachment permit for the use of or encroachment on City property regardless of the ultimate duration of such permit; excavation, street construction or street use permits; agreements for the use of City right-of-way where a contracting utility has the power of eminent domain; or agreements governing the use of City property that constitute a public forum for activities that are primarily for the purpose of espousing or advocating causes or ideas and that are generally protected by the First Amendment to the United States Constitution or that are primarily recreational in nature.

"Contractor" means any person or persons, firm, partnership, corporation, company, or combination thereof, that enters into a Contract with the City. "Contractor" does not include a public entity.

"Domestic Partner" means any person who has a currently registered domestic partnership with a governmental entity pursuant to state or local law authorizing the registration.

"Employee Benefits" means bereavement leave; disability, life, and other types of insurance; family medical leave; health benefits; membership or membership discounts; moving expenses; pension and retirement benefits; vacation; travel benefits; and any other benefit given to employees. "Employee benefits" shall not include benefits to the extent that the application of the requirements of this chapter to such benefits may be preempted by federal or state.

CONTRACTOR'S OBLIGATION TO PROVIDE THE CITY WITH DOCUMENTATION AND INFORMATION

Contractor shall provide the City with documentation and information verifying its compliance with the requirements of the Ordinance within ten (10) days of receipt of a request from the City. Contractors shall keep accurate payroll records, showing, for each City Contract, the employee's name, address, Social Security number, work classification, straight time pay rate, overtime pay rate, overtime hours worked, status and exemptions, and benefits for each day and pay period that the employee works on the City Contract. Each request for payroll records shall be accompanied by an affidavit to be completed and returned by the Contractor, as stated, attesting that the information contained in the payroll records is true and correct, and that the Contractor has complied with the requirements of the Ordinance. A violation of the Ordinance or noncompliance with the requirements of the Ordinance shall constitute a breach of contract.

EMPLOYER COMPLIANCE CERTIFICATE AND NOTICE REQUIREMENTS

(a) All contractors seeking a Contract subject to the Ordinance shall submit a completed Declaration of Compliance Form, signed by an authorized representative, with each proposal, bid or application. The Declaration of Compliance shall be made a part of the executed contract, and will be made available for public inspection and copying during regular business hours.

(b) The Contractor shall give each existing employee working directly on a City contract, and (at the time of hire), each new employee, a copy of the notification provided as Attachment "A."

(c) Contractor shall post, in a place visible to all employees, a copy of the notice provided as Attachment "B."

Attachment A

YOUR RIGHTS UNDER THE CITY OF SACRAMENTO'S NON-DISCRIMINATION IN EMPLOYEE BENEFITS CODE

On ..... (date), your employer (the "Employer") entered into a contract with the City of Sacramento (the "City") for ..... (contract details), and as a condition of that contract, agreed to abide by the requirements of the City's Non-Discrimination In Employee Benefits Code (Sacramento City Code Section 3.54).

The Ordinance does not require the Employer to provide employee benefits. The Ordinance does require that if certain employee benefits are provided by the Employer, that those benefits be provided without discrimination between employees with spouses and employees with domestic partners, and without discrimination between the spouse or domestic partner of employees.

The Ordinance covers any employee working on the specific contract referenced above, but only for the period of time while those employees are actually working on this specific contract.

The included employee benefits are:

- Bereavement leave
- Disability, life and other types of insurance
- Family medical leave
- Health benefits
- Membership or membership discounts
- Moving expenses
- Pension and retirement benefits
- Vacation
- Travel benefits
- Any other benefits given to employees

(Employee Benefits does not include benefits that may be preempted by federal or state law.)

If you feel you have been discriminated or retaliated against by your employer in the terms and conditions of your application for employment, or in your employment, or in the application of these employee benefits, because of your status as an applicant or as an employee protected by the Ordinance, or because you reported a violation of the Ordinance, and after having exhausted all remedies with your employer,

You May . . .

○ Submit a written complaint to the City of Sacramento, Procurement Services containing the details of the alleged violation. The address is:

City of Sacramento
Procurement Services Division
915 I Street, Second Floor
Sacramento, CA 95814

- Bring an action in the appropriate division of the Superior Court of the State of California against the Employer and obtain the following remedies:

  - Reinstatement, injunctive relief, compensatory damages and punitive damages

  - Reasonable attorney's fees and costs

Attachment B

YOUR RIGHTS UNDER THE CITY OF SACRAMENTO'S NON-DISCRIMINATION IN EMPLOYEE BENEFITS CODE

If your employer provides employee benefits, they must be provided to those employees working on a City of Sacramento contract without discriminating between employees with spouses and employees with domestic partners.

The included employee benefits are:

- Bereavement leave
- Disability, life and other types of insurance
- Family medical leave
- Health benefits
- Membership or membership discounts
- Moving expenses
- Pension and retirement benefits
- Vacation
- Travel benefits
- Any other benefits given to employees

If you feel you have been discriminated against by your employer . . .

You May . . .

○ Submit a written complaint to the City of Sacramento, Procurement Services, containing the details of the alleged violation. The address is:

City of Sacramento
Procurement Services Division
915 I Street, Second Floor
Sacramento, CA 95814

○ Bring an action in the appropriate division of the Superior Court of the State of California against the employer and obtain reinstatement, injunctive relief, compensatory damages, punitive damages and reasonable attorney's fees and costs.

Discrimination and Retaliation Prohibited.

If you feel you have been discriminated or retaliated against by your employer in the terms and conditions of your application for employment, or in your employment, because of your status as an applicant or as an employee protected by the Ordinance, or because you reported a violation of this Ordinance . . .

You May Also . . .

Submit a written complaint to the City of Sacramento, Procurement Services, at the same address, containing the details of the alleged violation.

EXHIBIT 10-F CERTIFICATION OF CONSULTANT, COMMISSIONS & FEES

I HEREBY CERTIFY that I am the Chief Operating Officer and, duly authorized representative of the firm of Vali Cooper & Associates, Inc, whose address is 2000 Powell Street, Suite 550, Emeryville CA 94608, and that, except as hereby expressly stated, neither I nor the above firm that I represent have:

(a) employed or retained for a commission, percentage, brokerage, contingent fee, or other consideration, any firm or person (other than a bona fide employee working solely for me or the above consultant) to solicit or secure this contract; nor

(b) agreed, as an express or implied condition for obtaining this contract, to employ or retain the services of any firm or person in connection with carrying out the contract; nor

(c) paid, or agreed to pay, to any firm, organization or person (other than a bona fide employee working solely for me or the above consultant) any fee, contribution, donation, or consideration of any kind, for or in connection with, procuring or carrying out this contract.

I acknowledge that this Certificate is to be made available to the California Department of Transportation (Caltrans) in connection with this contract involving participation of federal-aid highway funds, and is subject to applicable state and federal laws, both criminal and civil.

3-5-14
(Date)

(Signature)

Distribution: 1) Local Agency Project File (Original & Contract)
2) DLAE (with contract copy)

EXHIBIT 10-K CONSULTANT CERTIFICATION OF CONTRACT COSTS AND FINANCIAL MANAGEMENT SYSTEM

(Note: If requesting to utilize the Safe Harbor Indirect Cost Rate submit Attachment 1 of DLA-OB 13-07 - Safe Harbor Indirect Cost Rate for Consultant Contracts found at http://www.dot.ca.gov/hq/LocalPrograms/DLA_OB/DLA_OB.htm in lieu of this form.)

Certification of Final Indirect Costs:

Consultant Firm Name: Vali Cooper & Associates

Indirect Cost Rate: 139.57%

Fiscal Period Covered for Indirect Cost Rate Developed (mm/dd/yyyy to mm/dd/yyyy): 1-1-12 to 12-31-12

Date of Proposal Preparation (mm/dd/yyyy): 3-5-14

I, the undersigned, certify that I have reviewed the proposal to establish final indirect cost rates for the fiscal period as specified above and to the best of my knowledge and belief:

1. All costs included in this proposal to establish final indirect cost rates are allowable in accordance with the cost principles of the Federal Acquisition Regulations (FAR) of Title 48, Code of Federal Regulations (CFR), Part 31.
2. This proposal does not include any costs which are expressly unallowable under the cost principles of the FAR of 48 CFR, Part 31.

All known material transactions or events that have occurred affecting the firm's ownership, organization, and indirect cost rates have been disclosed as of the date of proposal preparation noted above.

Certification of Financial Management System:

I, the undersigned, certify to the best of my knowledge and belief that our financial management system meets the standards for financial reporting, accounting records, internal and budget control as set forth in the FAR of Title 49, CFR, Part 18.20 to the extent applicable to Consultant.

Certification of Dollar Amount for all A&E contracts:

I, the undersigned, certify that the approximate dollar amount of all A&E contracts awarded by Caltrans or a California local agency to this firm within the last three (3) calendar years for all State DOT and Local Agencies is $158.1 Million and the number of States in which the firm does business is one.

Certification of Direct Costs:

I, the undersigned, certify to the best of my knowledge and belief that all direct costs identified on the cost proposal(s) in this contract are reasonable, allowable and allocable to the contract in accordance with the cost principles of the FAR of Title 48, CFR, Part 31. Allowable direct costs to a Government contract shall be:

1. Compliant with Generally Accepted Accounting Principles (GAAP) and standards promulgated by the Cost Accounting Standards Board (when applicable).

2. Compliant with the terms of the contract and is incurred specifically for the contract.
3. Not prohibited by 23 CFR, Chapter 1, Part 172 –Administration of Engineering and Design Related Service Contracts to the extent requirements are applicable to Consultant.

All costs must be applied consistently and fairly to all contracts. All documentation of compliance must be retained in the project files.

Subconsultants (if applicable)

Proposed Contract Amount (or amount not to exceed if on-call contract): $ 77,838.16

Prime Consultants (if applicable)

Proposed **Total** Contract Amount (or amount not to exceed if on-call contract): $ 167,811.30

Prime, list all subconsultants and proposed subcontract dollar amounts (attach additional page if necessary):

DCM	$ 20,386.76
IFC	$ 6,929.34
Mark Thomas	$ 37,666.06
Stantec	$ 12,856.00

* Consultant Certification Signature: _____

Consultant Certifying (Print Name and Title):

Name: John Collins, PE

Title: Chief Operating Officer

Consultant Contact Information:

Email: john.collins@valicooper.com

Phone number: 510-446-8301

Date of Certification (mm/dd/yyyy): 3-5-14

*An individual executive or financial officer of the consultant's organization at a level no lower than a Vice President or Chief Financial Officer, or equivalent, who has authority to represent the financial information utilized to establish the indirect cost rate proposal submitted in conjunction with the contract.

Note: *Per 23 U.S.C. 112(b)(2)(B), Subconsultants must comply with the FAR Cost Principles contained in 48 CFR, Part 31. 23 CFR Part 172.3 Definitions state: Consultant means the individual or firm providing engineering and design related services as a party to the contract. Therefore, subconsultants as parties of a contract must complete a certification and send originals to A&I and keep copies in Local Agency Project Files.*

Distribution: 1) Original to Caltrans Audits and Investigations
2) Retained in Local Agency Project Files

EXHIBIT 10-O1 CONSULTANT PROPOSAL DBE COMMITMENT

(Inclusive of all DBEs listed at bid proposal. Refer to instructions on the reverse side of this form)

Consultant to Complete this Section

1. Local Agency Name: CITY OF SACRAMENTO
2. Project Location: WEST TUNNEL RAMPS ACCESS
3. Project Description: SITE IMPROVEMENTS TO ACCESS TUNNELS TO AMTRAK
4. Consultant Name: VALI COOPER AND ASSOCIATES, INC.
5. Contract DBE Goal %: 9.71%

DBE Commitment Information

6. Description of Services to be Provided	7. DBE Firm Contact Information	8. DBE Cert. Number	9. DBE %
LABOR COMPLIANCE	DCM 777 CAMPUS COMMONS RD SUITE 200 SACRAMENTO, CA 95825 916-565-7451	36323	12.15

10. Total % Claimed	
	12.15 %

Local Agency to Complete this Section

16. Local Agency Contract Number: _____

17. Federal-aid Project Number: _____

18. Proposed Contract Execution Date: _____

Local Agency certifies that all DBE certifications are valid and the information on this form is complete and accurate:

JOSE R. LEDESMA
19. Local Agency Representative Name (Print)

20. Local Agency Representative Signature

21. Date: 4-29-14

Contracts & Compliance Specialist
22. Local Agency Representative Title

916-808-8195
23. (Area Code) Tel. No.

11. Preparer's Signature

JOHN COLLINGS
12. Preparer's Name (Print)

C.O.O.
13. Preparer's Title

14. Date: 4-17-14

15. (Area Code) Tel. No.: 510-446-8301

Distribution: (1) Original – Consultant submits to local agency with proposal
(2) Copy – Local Agency files

INSTRUCTIONS - CONSULTANT PROPOSAL DBE COMMITMENT

Consultant Section

The Consultant shall:

1. **Local Agency Name** – Enter the name of the local or regional agency that is funding the contract.
2. **Project Location** - Enter the project location as it appears on the project advertisement.
3. **Project Description** - Enter the project description as it appears on the project advertisement (Bridge Rehab, Seismic Rehab, Overlay, Widening, etc.).
4. **Consultant Name** - Enter the consultant's firm name.
5. **Contract DBE Goal %** - Enter the contract DBE goal percentage, as it was reported on the Exhibit 10-I *Notice to Proposers DBE Information* form. See LAPM Chapter 10.
6. **Description of Services to be Provided** - Enter item of work description of services to be provided. Indicate all work to be performed by DBEs including work performed by the prime consultant's own forces, if the prime is a DBE. If 100% of the item is not to be performed or furnished by the DBE, describe the exact portion to be performed or furnished by the DBE. See LAPM Chapter 9 to determine how to count the participation of DBE firms.
7. **DBE Firm Contact Information** - Enter the name and telephone number of all DBE subcontracted consultants. Also, enter the prime consultant's name and telephone number, if the prime is a DBE.
8. **DBE Cert. Number** - Enter the DBEs Certification Identification Number. All DBEs must be certified on the date bids are opened. (DBE subcontracted consultants should notify the prime consultant in writing with the date of the decertification if their status should change during the course of the contract.)
9. **DBE %** - Percent participation of work to be performed or service provided by a DBE. Include the prime consultant if the prime is a DBE. See LAPM Chapter 9 for how to count full/partial participation.
10. **Total % Claimed** – Enter the total DBE participation claimed. If the Total % Claimed is less than item "6. Contract DBE Goal", an adequately documented Good Faith Effort (GFE) is required (see Exhibit 15-H *DBE Information - Good Faith Efforts* of the LAPM).
11. **Preparer's Signature** – The person completing this section of the form for the consultant's firm must sign their name.
12. **Preparer's Name (Print)** – Clearly enter the name of the person signing this section of the form for the consultant.
13. **Preparer's Title** - Enter the position/title of the person signing this section of the form for the consultant.
14. **Date** - Enter the date this section of the form is signed by the preparer.
15. **(Area Code) Tel. No.** - Enter the area code and telephone number of the person signing this section of the form for the consultant.

Local Agency Section:

The Local Agency representative shall:

16. **Local Agency Contract Number** - Enter the Local Agency Contract Number.
17. **Federal-Aid Project Number** - Enter the Federal-Aid Project Number.
18. **Contract Execution Date** - Enter date the contract was executed and Notice to Proceed issued. See LAPM Chapter 10, page 23.
19. **Local Agency Representative Name (Print)** - Clearly enter the name of the person completing this section.
20. **Local Agency Representative Signature** - The person completing this section of the form for the Local Agency must sign their name to certify that the information in this and the Consultant Section of this form is complete and accurate.
21. **Date** - Enter the date the Local Agency Representative signs the form.
22. **Local Agency Representative Title** - Enter the position/title of the person signing this section of the form.
23. **(Area Code) Tel. No.** - Enter the area code and telephone number of the Local Agency representative signing this section of the form.

EXHIBIT 10-O2 CONSULTANT CONTRACT DBE INFORMATION

(Inclusive of all DBEs listed at contract award. Refer to instructions on the reverse side of this form)

Consultant to Complete this Section

1. Local Agency Name: CITY OF SACRAMENTO
2. Project Location: WEST TUNNEL RAMPS ACCESS
3. Project Description: ACCESS SITE IMPROVEMENTS TO AMTRAK
4. Total Contract Award Amount: $ 167,811.30
5. Consultant Name: VALI COOPER & ASSOCIATES, INC.
6. Contract DBE Goal %: 9.71%
7. Total Dollar Amount for all Subconsultants: $ 77,838.16
8. Total Number of all Subconsultants: 4

Award DBE/DBE Information

9. Description of Services to be Provided	10. DBE/DBE Firm Contact Information	11. DBE Cert. Number	12. DBE Dollar Amount
LABOR COMPLIANCE	DCM 777 CAMPUS COMMONS RD SUITE 200 SACRAMENTO, CA 95825 916-565-7451	36323	$ 20,386.76

13. Total Dollars Claimed	$ 20,386.76
14. Total % Claimed	12.15 %

Local Agency to Complete this Section

20. Local Agency Contract Number: _____
21. Federal-aid Project Number: _____
22. Contract Execution Date: _____

Local Agency certifies that all DBE certifications are valid and the information on this form is complete and accurate:

23. Local Agency Representative Name (Print): Jose R. Ledesma
24. Local Agency Representative Signature
25. Date: 4-29-14
26. Local Agency Representative Title: Contracts & Compliance Specialist
27. (Area Code) Tel. No.: 916-808-8195

15. Preparer's Signature
16. Preparer's Name (Print): Jodie Greene
17. Preparer's Title: C.O.O.
18. Date: 4-17-14
19. (Area Code) Tel. No.: 510-446-8301

Caltrans to Complete this Section

Caltrans District Local Assistance Engineer (DLAE) certifies that this form has been reviewed for completeness:

28. DLAE Name (Print) _____
29. DLAE Signature _____
30. Date _____

Distribution: (1) Copy – Email a copy to the Caltrans District Local Assistance Engineer (DLAE) within 30 days of contract award. Failure to send a copy to the DLAE within 30 days of contract award may result in delay of payment.
(2) Copy – Include in award package sent to Caltrans DLAE
(3) Original – Local agency files

INSTRUCTIONS - CONSULTANT CONTRACT AWARD DBE INFORMATION

Consultant Section

The Consultant shall:

1. **Local Agency Name** – Enter the name of the local or regional agency that is funding the contract.
2. **Project Location -** Enter the project location as it appears on the project advertisement.
3. **Project Description** - Enter the project description as it appears on the project advertisement (Bridge Rehab, Seismic Rehab, Overlay, Widening, etc).
4. **Total Contract Award Amount** - Enter the total contract award dollar amount for the prime consultant.
5. **Consultant Name -** Enter the consultant's firm name.
6. **Contract DBE Goal % -** Enter the contract DBE goal percentage, as it was reported on the Exhibit 10-I *Notice to Proposers DBE Information* form. See LAPM Chapter 10.
7. **Total Dollar Amount for all Subconsultants –** Enter the total dollar amount for all subcontracted consultants. SUM = (DBE's + all Non-DBE's). Do **not** include the prime consultant information in this count.
8. **Total number of all subconsultants** – Enter the total number of all subcontracted consultants. SUM = (DBE's + all Non-DBE's). Do **not** include the prime consultant information in this count.
9. **Description of Services to be Provided** - Enter item of work description of services to be provided. Indicate all work to be performed by DBEs including work performed by the prime consultant's own forces, if the prime is a DBE. If 100% of the item is not to be performed or furnished by the DBE, describe the exact portion to be performed or furnished by the DBE. See LAPM Chapter 9 to determine how to count the participation of DBE firms.
10. **DBE Firm Contact Information -** Enter the name and telephone number of all DBE subcontracted consultants. Also, enter the prime consultant's name and telephone number, if the prime is a DBE.
11. **DBE Cert. Number -** Enter the DBE's Certification Identification Number. All DBEs must be certified on the date bids are opened. (DBE subcontracted consultants should notify the prime consultant in writing with the date of the decertification if their status should change during the course of the contract.)
12. **DBE Dollar Amount -** Enter the subcontracted dollar amount of the work to be performed or service to be provided. Include the prime consultant if the prime is a DBE, and include DBEs that are not identified as subconsultants on the Exhibit 10-O1 *Consultant Proposal DBE Commitment* form. See LAPM Chapter 9 for how to count full/partial participation.
13. **Total Dollars Claimed** – Enter the total dollar amounts for column 13.
14. **Total % Claimed** – Enter the total DBE participation claimed for column 13. SUM = (item "14. Total Participation Dollars Claimed" divided by item "4. Total Contract Award Amount"). If the Total % Claimed is less than item "6. Contract DBE Goal", an adequately documented Good Faith Effort (GFE) is required (see Exhibit 15-H *DBE Information - Good Faith Efforts* of the LAPM).
15. **Preparer's Signature** – The person completing this section of the form for the consultant's firm must sign their name.
16. **Preparer's Name (Print)** – Clearly enter the name of the person signing this section of the form for the consultant.
17. **Preparer's Title** - Enter the position/title of the person signing this section of the form for the consultant.
18. **Date** - Enter the date this section of the form is signed by the preparer.
19. **(Area Code) Tel. No.** - Enter the area code and telephone number of the person signing this section of the form for the consultant.

Local Agency Section:

The Local Agency representative shall:

20. **Local Agency Contract Number -** Enter the Local Agency Contract Number.
21. **Federal-Aid Project Number** - Enter the Federal-Aid Project Number.
22. **Contract Execution Date -** Enter the date the contract was executed and Notice to Proceed issued. See LAPM Chapter 10, page 23.
23. **Local Agency Representative Name (Print) -** Clearly enter the name of the person completing this section.
24. **Local Agency Representative Signature** - The person completing this section of the form for the Local Agency must sign their name to certify that the information in this and the Consultant Section of this form is complete and accurate.
25. **Date -** Enter the date the Local Agency Representative signs the form.
26. **Local Agency Representative Title -** Enter the position/title of the person signing this section of the form.
27. **(Area Code) Tel. No. -** Enter the area code and telephone number of the Local Agency representative signing this section of the form.

Caltrans Section:

Caltrans District Local Assistance Engineer (DLAE) shall:

28. **DLAE Name (Print)** – Clearly enter the name of the DLAE.
29. **DLAE Signature** – DLAE must sign this section of the form to certify that it has been reviewed for completeness.
30. **Date -** Enter the date that the DLAE signs this section the form.

EXHIBIT 10-P NONLOBBYING CERTIFICATION FOR FEDERAL-AID CONTRACTS

The prospective participant certifies by signing and submitting this proposal/bid to the best of his or her knowledge and belief that:

(1) No federal appropriated funds have been paid or will be paid, by or on behalf of the undersigned, to any person for influencing or attempting to influence an officer or employee of any federal agency, a Member of Congress, an officer or employee of Congress, or an employee of a Member of Congress in connection with the awarding of any federal contract, the making of any federal grant, the making of any federal loan, the entering into of any cooperative agreement, and the extension, continuation, renewal, amendment, or modification of any federal contract, grant, loan, or cooperative agreement.

(2) If any funds other than federal appropriated funds have been paid or will be paid to any person for influencing or attempting to influence an officer or employee of any federal agency, a Member of Congress, an officer or employee of Congress, or an employee of a Member of Congress in connection with this federal contract, grant, loan, or cooperative agreement, the undersigned shall complete and submit Standard Form-LLL, "Disclosure of Lobbying Activities," in accordance with its instructions.

This certification is a material representation of fact upon which reliance was placed when this transaction was made or entered into. Submission of this certification is a prerequisite for making or entering into this transaction imposed by Section 1352, Title 31, U.S. Code. Any person who fails to file the required certification shall be subject to a civil penalty of not less than $10,000 and not more than $100,000 for each such failure.

The prospective participant also agrees by submitting his/her proposal/bid that he/she shall require that the language of this certification be included in all lower-tier subcontracts which exceed $100,000 and that all such sub-recipients shall certify and disclose accordingly.

EXHIBIT 10-I NOTICE TO PROPOSERS DBE INFORMATION

The Agency has established a DBE goal for this Contract of _____%

OR

The Agency has not established a goal for this Contract. However, proposers are encouraged to obtain DBE participation for this contract.

1. TERMS AS USED IN THIS DOCUMENT

- The term "Disadvantaged Business Enterprise" or "DBE" means a for-profit small business concern owned and controlled by a socially and economically disadvantaged person(s) as defined in Title 49, Code of Federal Regulations (CFR), Part 26.5.
- The term "Agreement" also means "Contract."
- Agency also means the local entity entering into this contract with the Contractor or Consultant.
- The term "Small Business" or "SB" is as defined in 49 CFR 26.65.

2. AUTHORITY AND RESPONSIBILITY

A. DBEs and other small businesses are strongly encouraged to participate in the performance of Contracts financed in whole or in part with federal funds (See 49 CFR 26, "Participation by Disadvantaged Business Enterprises in Department of Transportation Financial Assistance Programs"). The Consultant must ensure that DBEs and other small businesses have the opportunity to participate in the performance of the work that is the subject of this solicitation and should take all necessary and reasonable steps for this assurance. The proposer must not discriminate on the basis of race, color, national origin, or sex in the award and performance of subcontracts.

B. Proposers are encouraged to use services offered by financial institutions owned and controlled by DBEs.

3. SUBMISSION OF DBE INFORMATION

If there is a DBE goal on the contract, Exhibit 10-O1 *Consultant Proposal DBE Commitment* must be included in the Request for Proposal. In order for a proposer to be considered responsible and responsive, the proposer must make good faith efforts to meet the goal established for the contract. If the goal is not met, the proposer must document adequate good faith efforts. All DBE participation will be counted towards the contract goal; therefore, all DBE participation shall be collected and reported.

Exhibit 10-O2 *Consultant Contract DBE Information* must be included with the Request for Proposal. Even if no DBE participation will be reported, the successful proposer must execute and return the form.

4. DBE PARTICIPATION GENERAL INFORMATION

It is the proposer's responsibility to be fully informed regarding the requirements of 49 CFR, Part 26, and the Department's DBE program developed pursuant to the regulations. Particular attention is directed to the following:

A. A DBE must be a small business firm defined pursuant to 13 CFR 121 and be certified through the California Unified Certification Program (CUCP).

B. A certified DBE may participate as a prime consultant, subconsultant, joint venture partner, as a vendor of material or supplies, or as a trucking company.

C. A DBE proposer not proposing as a joint venture with a non-DBE, will be required to document one or a combination of the following:

1. The proposer is a DBE and will meet the goal by performing work with its own forces.
2. The proposer will meet the goal through work performed by DBE subconsultants, suppliers or trucking companies.
3. The proposer, prior to proposing, made adequate good faith efforts to meet the goal.

D. A DBE joint venture partner must be responsible for specific contract items of work or clearly defined portions thereof. Responsibility means actually performing, managing, and supervising the work with its own forces. The DBE joint venture partner must share in the capital contribution, control, management, risks and profits of the joint venture commensurate with its ownership interest.

E. A DBE must perform a commercially useful function pursuant to 49 CFR 26.55, that is, a DBE firm must be responsible for the execution of a distinct element of the work and must carry out its responsibility by actually performing, managing and supervising the work.

F. The proposer shall list only one subconsultant for each portion of work as defined in their proposal and all DBE subconsultants should be listed in the bid/cost proposal list of subconsultants.

G. A prime consultant who is a certified DBE is eligible to claim all of the work in the Contract toward the DBE participation except that portion of the work to be performed by non-DBE subconsultants.

5. RESOURCES

A. The CUCP database includes the certified DBEs from all certifying agencies participating in the CUCP. If you believe a firm is certified that cannot be located on the database, please contact the Caltrans Office of Certification toll free number 1-866-810-6346 for assistance.

B. Access the CUCP database from the Department of Transportation, Office of Business and Economic Opportunity Web site at: http://www.dot.ca.gov/hq/bep/.

1. Click on the link in the left menu titled *Disadvantaged Business Enterprise*;
2. Click on Search for a DBE Firm link;
3. Click on *Access to the DBE Query Form* located on the first line in the center of the page.

Searches can be performed by one or more criteria. Follow instructions on the screen.

6. MATERIALS OR SUPPLIES PURCHASED FROM DBES COUNT TOWARDS THE DBE GOAL UNDER THE FOLLOWING CONDITIONS:

A. If the materials or supplies are obtained from a DBE manufacturer, count 100 percent of the cost of the materials or supplies. A DBE manufacturer is a firm that operates or maintains a factory, or establishment that produces on the premises the materials, supplies, articles, or equipment required under the Contract and of the general character described by the specifications.

B. If the materials or supplies purchased from a DBE regular dealer, count 60 percent of the cost of the materials or supplies. A DBE regular dealer is a firm that owns, operates or maintains a store, warehouse, or other establishment in which the materials, supplies, articles or equipment of the general character described by the specifications and required under the Contract are bought, kept in stock, and regularly sold or leased to the public in the usual course of business. To be a DBE regular dealer, the firm must be an established, regular business that engages, as its principal business and under its own name, in the

purchase and sale or lease of the products in question. A person may be a DBE regular dealer in such bulk items as petroleum products, steel, cement, gravel, stone or asphalt without owning, operating or maintaining a place of business provided in this section.

C. If the person both owns and operates distribution equipment for the products, any supplementing of regular dealers' own distribution equipment shall be, by a long-term lease agreement and not an ad hoc or Agreement-by-Agreement basis. Packagers, brokers, manufacturers' representatives, or other persons who arrange or expedite transactions are not DBE regular dealers within the meaning of this section.

D. Materials or supplies purchased from a DBE, which is neither a manufacturer nor a regular dealer, will be limited to the entire amount of fees or commissions charged for assistance in the procurement of the materials and supplies, or fees or transportation charges for the delivery of materials or supplies required on the job site, provided the fees are reasonable and not excessive as compared with fees charged for similar services.

EXHIBIT 10-J STANDARD CONTRACT PROVISIONS FOR SUBCONSULTANT/DBE PARTICIPATION

1. Subconsultants

A. Nothing contained in this Contract or otherwise, shall create any contractual relation between the Agency and any subconsultants, and no subcontract shall relieve the Consultant of his/her responsibilities and obligations hereunder. The Consultant agrees to be as fully responsible to the Agency for the acts and omissions of its subconsultants and of persons either directly or indirectly employed by any of them as it is for the acts and omissions of persons directly employed by the Consultant. The Consultant's obligation to pay its subconsultants is an independent obligation from the Agency's obligation to make payments to the Consultant.

B. Any subcontract in excess of $25,000, entered into as a result of this Contract, shall contain all the provisions stipulated in this Contract to be applicable to subconsultants.

C. Consultant shall pay its subconsultants within ten (10) calendar days from receipt of each payment made to the Consultant by the Agency.

D. Any substitution of subconsultants must be approved in writing by the Agency's Contract Administrator in advance of assigning work to a substitute subconsultant.

2. Disadvantaged Business Enterprise (DBE) Participation

A. This Contract is subject to 49 CFR, Part 26 entitled "Participation by Disadvantaged Business Enterprises in Department of Transportation Financial Assistance Programs". Proposers who obtain DBE participation on this contract will assist Caltrans in meeting its federally mandated statewide overall DBE goal.

B. If the contract has a DBE goal, the Consultant must meet the goal by committing DBE participation or document a good faith effort to meet the goal. If a DBE subconsultant is unable to perform, the Consultant must make a good faith effort to replace him/her with another DBE subconsultant, if the goal is not otherwise met. A DBE is a firm meeting the definition of a DBE as specified in 49 CFR.

C. DBEs and other small businesses, as defined in 49 CFR, Part 26 are encouraged to participate in the performance of contracts financed in whole or in part with federal funds. The Consultant or subconsultant shall not discriminate on the basis of race, color, national origin, or sex in the performance of this Contract. The Consultant shall carry out applicable requirements of 49 CFR, Part 26 in the award and administration of US DOT- assisted agreements. Failure by the Consultant to carry out these requirements is a material breach of this Contract, which may result in the termination of this Contract or such other remedy as the local agency deems appropriate.

D. Any subcontract entered into as a result of this Contract shall contain all of the provisions of this section.

E. A DBE may be terminated only with prior written approval from the local agency and only for the reasons specified in 49 CFR 26.53(f). Prior to requesting local agency consent for the termination, the prime consultant must meet the procedural requirements specified in 49 CFR 26.53(f).

3. Performance of DBE Consultant and other DBE Subconsultants/Suppliers

A. A DBE performs a commercially useful function when it is responsible for execution of the work of the Contract and is carrying out its responsibilities by actually performing, managing, and supervising the work involved. To perform a commercially useful function, the DBE must also be responsible with respect to materials and supplies used on the Contract, for negotiating price, determining quality and quantity, ordering the material, and installing (where applicable) and paying for the material itself. To determine whether a DBE is performing a commercially useful function, evaluate the amount of work subcontracted, industry practices; whether the amount the firm is to be paid under the Contract is commensurate with the work it is actually performing; and other relevant factors.

B. A DBE does not perform a commercially useful function if its role is limited to that of an extra participant in a transaction, Contract, or project through which funds are passed in order to obtain the appearance of DBE participation. In determining whether a DBE is such an extra participant, examine similar transactions, particularly those in which DBEs do not participate.

C. If a DBE does not perform or exercise responsibility for at least 30 percent of the total cost of its Contract with its own work force, or the DBE subcontracts a greater portion of the work of the Contract than would be expected on the basis of normal industry practice for the type of work involved, it will be presumed that it is not performing a commercially useful function.

4. Prompt Payment of Funds Withheld to Subconsultants

A. Any subcontract entered into as a result of this Contract shall contain all of the provisions of this section.

(Local agency to include either B, C, or D below; delete the other two.)

B. No retainage will be withheld by the Agency from progress payments due the prime Consultant. Retainage by the prime Consultant or subconsultants is prohibited, and no retainage will be held by the prime Consultant from progress due subconsultants. Any violation of this provision shall subject the violating prime Consultant or subconsultants to the penalties, sanctions, and other remedies specified in Section 7108.5 of the California Business and Professions Code. This requirement shall not be construed to limit or impair any contractual, administrative, or judicial remedies, otherwise available to the prime Consultant or subconsultant in the event of a dispute involving late payment or nonpayment by the prime Consultant or deficient subconsultant performance, or noncompliance by a subconsultant. This provision applies to both DBE and non-DBE prime Consultants and subconsultants.

C. No retainage will be held by the Agency from progress payments due the prime Consultant. Any retainage held by the prime Consultant or subconsultants from progress payments due subconsultants shall be promptly paid in full to subconsultants within 30 days after the subconsultant's work is satisfactorily completed. Federal law (49 CFR26.29) requires that any delay or postponement of payment over the 30 days may take place only for good cause and with the Agency's prior written approval. Any violation of this provision shall subject the violating prime Consultant or subconsultant to the penalties, sanctions and other remedies specified in Section 7108.5 of the Business and Professions Code. These requirements shall not be construed to limit or impair any contractual, administrative, or judicial remedies, otherwise available to the prime Consultant or subconsultant in the event of a dispute involving late payment or nonpayment by the prime consultant, deficient subconsultant performance, or noncompliance by a subconsultant. This provision applies to both DBE and non-DBE prime consultant and subconsultants.

D. The Agency shall hold retainage from the prime consultant and shall make prompt and regular incremental acceptances of portions, as determined by the Agency, of the contract work, and pay retainage to the prime consultant based on these acceptances. The prime consultant, or subconsultant, shall return all monies withheld in retention from a subconsultant within 30 days after receiving payment for work satisfactorily completed and accepted including incremental acceptances of portions of the contract work by the agency. Federal law (49 CFR26.29) requires that any delay or postponement of payment over 30 days may take place only for good cause and with the agency's prior written approval. Any violation of this provision shall subject the violating prime consultant or subconsultant to the penalties, sanctions and other remedies specified in Section 7108.5 of the Business and Professions Code. These requirements shall not be construed to limit or impair any contractual, administrative, or judicial remedies, otherwise available to the prime consultant or subconsultant in the event of a dispute involving late payment or nonpayment by the prime Consultant, deficient subconsultant performance, or noncompliance by a subconsultant. This provision applies to both DBE and non-DBE prime consultant and subconsultants.

5. DBE Records

A. The Consultant shall maintain records of materials purchased or supplied from all subcontracts entered into with certified DBEs. The records shall show the name and business address of each DBE or vendor and the total dollar amount actually paid each DBE or vendor, regardless of tier. The records shall show the date of payment and the total dollar figure paid to all firms. DBE prime consultants shall also show the date of work performed by their own forces along with the corresponding dollar value of the work.

B. Upon completion of the Contract, a summary of these records shall be prepared and submitted on the form entitled, "Final Report-Utilization of Disadvantaged Business Enterprise (DBE), First-Tier Subconsultants," CEM-2402F (Exhibit 17-F, Chapter 17, of the LAPM), certified correct by the Consultant or the Consultant's authorized representative and shall be furnished to the Contract Administrator with the final invoice. Failure to provide the summary of DBE payments with the final invoice will result in 25 percent of the dollar value of the invoice being withheld from payment until the form is submitted. The amount will be returned to the Consultant when a satisfactory "Final Report-Utilization of Disadvantaged Business Enterprises (DBE), First-Tier Subconsultants" is submitted to the Contract Administrator.

6. DBE Certification and Decertification Status

If a DBE subconsultant is decertified during the life of the Contract, the decertified subconsultant shall notify the Consultant in writing with the date of decertification. If a subconsultant becomes a certified DBE during the life of the Contract, the subconsultant shall notify the Consultant in writing with the date of certification. Any changes should be reported to the Agency's Contract Administrator within 30 days.

EXHIBIT 10-Q DISCLOSURE OF LOBBYING ACTIVITIES

COMPLETE THIS FORM TO DISCLOSE LOBBYING ACTIVITIES PURSUANT TO 31 U.S.C. 1352

1. Type of Federal Action:

☐ a. contract
b. grant
c. cooperative agreement
d. loan
e. loan guarantee
f. loan insurance

2. Status of Federal Action:

☐ a. bid/offer/application
b. initial award
c. post-award

3. Report Type:

☐ a. initial
b. material change

For Material Change Only:
year _____ quarter _____
date of last report _____

4. Name and Address of Reporting Entity

☐ Prime ☐ Subawardee
Tier _____, if known

Congressional District, if known

5. If Reporting Entity in No. 4 is Subawardee, Enter Name and Address of Prime:

Congressional District, if known

6. Federal Department/Agency: N/A

7. Federal Program Name/Description:

CFDA Number, if applicable _____

8. Federal Action Number, if known:

9. Award Amount, if known:

10. Name and Address of Lobby Entity
(If individual, last name, first name, MI)

11. Individuals Performing Services (including address if different from No. 10a)
(last name, first name, MI)

(attach Continuation Sheet(s) if necessary)

12. Amount of Payment (check all that apply)

$ _____ ☐ actual ☐ planned

13. Form of Payment (check all that apply):

☐ a. cash
☐ b. in-kind; specify: nature _____
Value _____

14. Type of Payment (check all that apply)

☐ a. retainer
☐ b. one-time fee
☐ c. commission
☐ d. contingent fee
☐ e deferred
☐ f. other, specify _____

15. Brief Description of Services Performed or to be performed and Date(s) of Service, including officer(s), employee(s), or member(s) contacted, for Payment Indicated in Item 11:

(attach Continuation Sheet(s) if necessary)

16. Continuation Sheet(s) attached: **Yes** ☐ **No** ☐

17. Information requested through this form is authorized by Title 31 U.S.C. Section 1352. This disclosure of lobbying reliance was placed by the tier above when his transaction was made or entered into. This disclosure is required pursuant to 31 U.S.C. 1352. This information will be reported to Congress semiannually and will be available for public inspection. Any person who fails to file the required disclosure shall be subject to a civil penalty of not less than $10,000 and not more than $100,000 for each such failure.

Signature: [signature]

Print Name: Jonne Collins

Title: C.O.O.

Telephone No.: 510-446-8301 Date: 4-17-14

Authorized for Local Reproduction

Standard Form - LLL

Federal Use Only:

Standard Form LLL Rev. 04-28-06

Distribution: Orig- Local Agency Project Files

INSTRUCTIONS FOR COMPLETING EXHIBIT 10-Q DISCLOSURE OF LOBBYING ACTIVITIES

This disclosure form shall be completed by the reporting entity, whether subawardee or prime federal recipient at the initiation or receipt of covered federal action or a material change to previous filing pursuant to title 31 U.S.C. Section 1352. The filing of a form is required for such payment or agreement to make payment to lobbying entity for influencing or attempting to influence an officer or employee of any agency, a Member of Congress an officer or employee of Congress or an employee of a Member of Congress in connection with a covered federal action. Attach a continuation sheet for additional information if the space on the form is inadequate. Complete all items that apply for both the initial filing and material change report. Refer to the implementing guidance published by the Office of Management and Budget for additional information.

1. Identify the type of covered federal action for which lobbying activity is or has been secured to influence, the outcome of a covered federal action.
2. Identify the status of the covered federal action.
3. Identify the appropriate classification of this report. If this is a follow-up report caused by a material change to the information previously reported, enter the year and quarter in which the change occurred. Enter the date of the last, previously submitted report by this reporting entity for this covered federal action.
4. Enter the full name, address, city, state, and zip code of the reporting entity. Include Congressional District if known. Check the appropriate classification of the reporting entity that designates if it is or expects to be a prime or subaward recipient. Identify the tier of the subawardee, e.g., the first subawardee of the prime is the first tier. Subawards include but are not limited to: subcontracts, subgrants, and contract awards under grants.
5. If the organization filing the report in Item 4 checks "Subawardee" then enter the full name, address, city, state, and zip code of the prime federal recipient. Include Congressional District, if known.
6. Enter the name of the federal agency making the award or loan commitment. Include at least one organization level below agency name, if known. For example, Department of Transportation, United States Coast Guard.
7. Enter the federal program name or description for the covered federal action (item 1). If known, enter the full Catalog of Federal Domestic Assistance (CFDA) number for grants, cooperative agreements, loans and loan commitments.
8. Enter the most appropriate federal identifying number available for the federal action identification in item 1 (e.g., Request for Proposal (RFP) number, Invitation for Bid (IFB) number, grant announcement number, the contract grant. or loan award number, the application/proposal control number assigned by the federal agency). Include prefixes, e.g., "RFP-DE-90-001."
9. For a covered federal action where there has been an award or loan commitment by the Federal agency, enter the federal amount of the award/loan commitments for the prime entity identified in item 4 or 5.
10. Enter the full name, address, city, state, and zip code of the lobbying entity engaged by the reporting entity identified in Item 4 to influence the covered federal action.
11. Enter the full names of the individual(s) performing services and include full address if different from 10 (a). Enter Last Name, First Name and Middle Initial (MI).
12. Enter the amount of compensation paid or reasonably expected to be paid by the reporting entity (Item 4) to the lobbying entity (Item 10). Indicate whether the payment has been made (actual) or will be made (planned). Check all boxes that apply. If this is a material change report, enter the cumulative amount of payment made or planned to be made.
13. Check all boxes that apply. If payment is made through an in-kind contribution, specify the nature and value of the in-kind payment.
14. Check all boxes that apply. If other, specify nature.
15. Provide a specific and detailed description of the services that the lobbyist has performed or will be expected to perform and the date(s) of any services rendered. Include all preparatory and related activity not just time spent in actual contact with federal officials. Identify the federal officer(s) or employee(s) contacted or the officer(s) employee(s) or Member(s) of Congress that were contacted.
16. Check whether or not a continuation sheet(s) is attached.
17. The certifying official shall sign and date the form, and print his/her name title and telephone number.

Public reporting burden for this collection of information is estimated to average 30-minutes per response, including time for reviewing instruction, searching existing data sources, gathering and maintaining the data needed, and completing and reviewing the collection of information. Send comments regarding the burden estimate or any other aspect of this collection of information, including suggestions for reducing this burden, to the Office of Management and Budget, Paperwork Reduction Project (0348-0046), Washington, D.C. 20503. SF-LLL-Instructions Rev. 06-04-90

EXHIBIT 10-T PANEL MEMBER CONFLICT OF INTEREST AND CONFIDENTIALITY STATEMENT

RFP/RFQ PROCUREMENT NUMBERS: _____

PROJECT NAME:

_____

APPLICABILITY: Applicable to local agency consultant procurements which will contain Federal or State funds in the consultant contract.

☐ I am an employee of the local agency that is responsible for this procurement.

☐ I am an employee of a consultant under contract to the local agency that is responsible for this procurement but I am not in a management position with the local agency.

☐ I have a personal, financial, or business interest in past employment activity or a personal relationship regarding the firms (including subconsultants) that are the subject of this evaluation. A brief description is provided on the back of this form.

☐ I certify that I have no current contractual relationship with any of the firms (including subconsultants) that are the subject of this evaluation.

☐ I certify that I have no personal or financial interest and no present or past employment activity or personal relationship or prior contractual relationship which would be incompatible with my participation in this solicitation process and I am fully able to give full, fair and impartial consideration to all proposals/bids as an appointee to the related evaluation.

☐ I certify that I have read **49 CFR 18.36(b)(3)** below and I agree not to participate in selection, or in the award or administration of a contract supported by Federal funds if a conflict of interest, real or apparent, would be involved. **Note:** Caltrans is the Grantee and the local agency is the sub-grantee.

49CFR 18.36(b)(3)

(3) Grantees and subgrantees will maintain a written code of standards of conduct governing the performance of their employees engaged in the award and administration of contracts. No employee, officer, or agent of the grantee or subgrantee shall participate in selection, or in the award or administration of a contract supported by Federal funds if a conflict of interest, real or apparent, would be involved. Such a conflict would arise when:

(i) The employee, officer, or agent,

(ii) Any member of his immediate family,

(iii) His or her partner, or

(iv) An organization which employs, or is about to employ, any of the above, has a financial or other interest in the firm selected for award. The grantee's or subgrantee's officers, employees or agents will neither solicit nor accept gratuities, favors or anything of monetary value from contractors, potential contractors, or parties to subagreements. Grantee and subgrantees may set minimum rules where the financial interest is not substantial or the gift is an unsolicited item of nominal intrinsic value. To the extent permitted by State or local law or regulations, such standards or conduct will provide for penalties, sanctions, or other disciplinary actions for violations of such standards by the grantee's and subgrantee's officers, employees, or agents, or by contractors or their agents.

The awarding agency may in regulation provide additional prohibitions relative to real, apparent, or potential conflicts of interest.

☐ I fully understand and agree to immediately disqualify myself as soon as I am aware of a conflict of interest that may compromise my fair and impartial consideration of the proposals/bids.

☐ I certify that I will hold in the strictest confidence all bids, proposals, correspondence, memoranda, working papers, or any other media which has any bearing on, or disclose any aspect of, any respondent or potential respondent to the RFP/RFQ above. I will not discuss the evaluation process with anyone not involved in the evaluation process until its completion.

☐ I fully understand that it is unlawful for a person to utilize any organization name or auxiliary organization information, which is not a matter of public record, for personal gain.

☐ I fully understand that any violation of the above is a basis for disciplinary action, up to and including termination or referral to the appropriate authorities for further investigation.

☐ I am aware that the following firms and subconsultants/subcontractors have submitted proposals in response to the above referenced solicitation:

List firms including subconsultants/subcontractors:

1. _____

2. _____

3. _____

4. _____

etc. _____

Date: _____ Signed: _____

Name: _____

Title: _____

Dept./Local Agency: _____

Employer: _____

EXHIBIT 10-V NON-DISCRIMINATION CLAUSE

(To be included in Consultant Contract)

NON-DISCRIMINATION CLAUSE

During the performance of this Contract, Consultant and its subconsultant shall not unlawfully discriminate, harass, or allow harassment against any employee or applicant for employment because of sex, race, color, ancestry, religious creed, national origin, physical disability (including HIV and AIDS), mental disability, medical condition (e.g., cancer), age (over 40), marital status, and denial of family care leave. Consultant and subconsultants shall insure that the evaluation and treatment of their employees and applicants for employment are free from such discrimination and harassment. Consultant and subconsultants shall comply with the provisions of the Fair Employment and Housing Act (Gov. Code §12990 (a-f) et seq.) and the applicable regulations promulgated thereunder (California Code of Regulations, Title 2, Section 7285 et seq.). The applicable regulations of the Fair Employment and Housing Commission implementing Government Code Section 12990 (a-f), set forth in Chapter 5 of Division 4 of Title 2 of the California Code of Regulations, are incorporated into this Contract by reference and made a part hereof as if set forth in full. Consultant and its subconsultants shall give written notice of their obligations under this clause to labor organizations with which they have a collective bargaining or other Agreement.

Consultant shall include the nondiscrimination and compliance provisions of this clause in all subcontracts to perform work under the Contract.

YEAR

CALIFORNIA FORM

2014 Withholding Exemption Certificate 590

The payee completes this form and submits it to the withholding agent.

Withholding Agent (Type or print)

Name

CITY OF SACRAMENTO

Payee

Name: VALI COOPER & ASSOCIATES, INC

☐ SSN or ITIN ☐ FEIN ☐ CA Corp no. ☐ CA SOS file no. 68-0284873

Address (apt./ste., room, PO Box, or PMB no.): 2000 POWELL STREET, SUITE 550

City (If you have a foreign address, see instructions.): EMERYVILLE

State: CA ZIP Code: 94608

Exemption Reason

Check only one reason box below that applies to the payee.

By checking the appropriate box below, the Payee certifies the reason for the exemption from the California income tax withholding requirements on payment(s) made to the entity or individual.

☐ **Individuals — Certification of Residency:**
I am a resident of California and I reside at the address shown above. If I become a nonresident at any time, I will promptly notify the withholding agent. See instructions for General Information D, Definitions.

☒ **Corporations:**
The corporation has a permanent place of business in California at the address shown above or is qualified through the California Secretary of State (SOS) to do business in California. The corporation will file a California tax return. If this corporation ceases to have a permanent place of business in California or ceases to do any of the above, I will promptly notify the withholding agent. See instructions for General Information D, Definitions.

☐ **Partnerships or limited liability companies (LLCs):**
The partnership or LLC has a permanent place of business in California at the address shown above or is registered with the California SOS, and is subject to the laws of California. The partnership or LLC will file a California tax return. If the partnership or LLC ceases to do any of the above, I will promptly inform the withholding agent. For withholding purposes, a limited liability partnership (LLP) is treated like any other partnership.

☐ **Tax-Exempt Entities:**
The entity is exempt from tax under California Revenue and Taxation Code (R&TC) Section 23701 _____ (insert letter) or Internal Revenue Code Section 501(c) _____ (insert number). If this entity ceases to be exempt from tax, I will promptly notify the withholding agent. Individuals cannot be tax-exempt entities.

☐ **Insurance Companies, Individual Retirement Arrangements (IRAs), or Qualified Pension/Profit Sharing Plans:**
The entity is an insurance company, IRA, or a federally qualified pension or profit-sharing plan.

☐ **California Trusts:**
At least one trustee and one noncontingent beneficiary of the above-named trust is a California resident. The trust will file a California fiduciary tax return. If the trustee or noncontingent beneficiary becomes a nonresident at any time, I will promptly notify the withholding agent.

☐ **Estates — Certification of Residency of Deceased Person:**
I am the executor of the above-named person's estate or trust. The decedent was a California resident at the time of death. The estate will file a California fiduciary tax return.

☐ **Nonmilitary Spouse of a Military Servicemember:**
I am a nonmilitary spouse of a military servicemember and I meet the Military Spouse Residency Relief Act (MSRRA) requirements. See instructions for General Information E, MSRRA.

CERTIFICATE OF PAYEE: Payee must complete and sign below.

Under penalties of perjury, I hereby certify that the information provided in this document is, to the best of my knowledge, true and correct. If conditions change, I will promptly notify the withholding agent.

Payee's name and title (type or print): JOHN COLLINS Telephone (510) 446-8301

Payee's signature ▶ _____ Date 4-17-14

Instructions for Form 590

Withholding Exemption Certificate

References in these instructions are to the California Revenue and Taxation Code (R&TC).

General Information

Registered Domestic Partners (RDP) – For purposes of California income tax, references to a spouse, husband, or wife also refer to a Registered Domestic Partner (RDP) unless otherwise specified. For more information on RDPs, get FTB Pub. 737, Tax Information for Registered Domestic Partners.

A Purpose

Use Form 590, Withholding Exemption Certificate, to certify an exemption from nonresident withholding.

Form 590 does not apply to payments of backup withholding. For information on California backup withholding, go to **ftb.ca.gov** and search for **backup withholding**.

Form 590 does not apply to payments for wages to employees. Wage withholding is administered by the California Employment Development Department (EDD). For more information, go to **edd.ca.gov** or call 888.745.3886.

Do not use Form 590 to certify an exemption from withholding if you are a **Seller of California real estate**. Sellers of California real estate use Form 593-C, Real Estate Withholding Certificate, to claim an exemption from real estate withholding.

The following are excluded from withholding and completing this form:

- The United States and any of its agencies or instrumentalities.
- A state, a possession of the United States, the District of Columbia, or any of its political subdivisions or instrumentalities.
- A foreign government or any of its political subdivisions, agencies, or instrumentalities.

B Income Subject to Withholding

California Revenue and Taxation Code (R&TC) Section 18662 requires withholding of income or franchise tax on payments of California source income made to nonresidents of California.

Withholding is required on the following, but is not limited to:

- Payments to nonresidents for services rendered in California.
- Distributions of California source income made to domestic nonresident S corporation shareholders, partners, and members and allocations of California source income made to foreign partners and members.
- Payments to nonresidents for rents if the payments are made in the course of the withholding agent's business.
- Payments to nonresidents for royalties from natural resources with activities in California.
- Distributions of California source income to nonresident beneficiaries from an estate or trust.
- Endorsement payments received for services performed in California.
- Prizes and winnings received by nonresidents for contests in California.

However, withholding is optional if the total payments of California source income are $1,500 or less during the calendar year.

For more information on withholding get FTB Pub. 1017, Resident and Nonresident Withholding Guidelines. To get a withholding publication, see Additional Information.

C Who Certifies this Form

Form 590 is certified by the payee. California residents or entities exempt from the withholding requirement should complete Form 590 and submit it to the withholding agent. The withholding agent is then relieved of the withholding requirements if the agent relies in good faith on a completed and signed Form 590 unless notified by the Franchise Tax Board (FTB) that the form should not be relied upon.

An incomplete certificate is invalid and the withholding agent should not accept it. If the withholding agent receives an incomplete certificate, the withholding agent is required to withhold tax on payments made to the payee until a valid certificate is received. In lieu of a completed certificate on the preprinted form, the withholding agent may accept as a substitute certificate a letter from the payee explaining why the payee is not subject to withholding. The letter must contain all the information required on the certificate in similar language, including the under penalty of perjury statement and the payee's taxpayer identification number. The withholding agent must retain a copy of the certificate or substitute for at least four years after the last payment to which the certificate applies, and provide it upon request to the FTB.

For example, if an entertainer (or the entertainer's business entity) is paid for a performance, the entertainer's information must be provided. **Do not** submit the entertainer's agent or promoter information.

The grantor of a grantor trust shall be treated as the payee for withholding purposes. Therefore, if the payee is a grantor trust and one or more of the grantors is a nonresident, withholding is required. If all of the grantors on the trust are residents, no withholding is required. Resident grantors can check the box on Form 590 labeled "Individuals — Certification of Residency."

D Definitions

Nonresident includes all of the following:

- Individuals who are not residents of California.
- Corporations not qualified through the California Secretary of State (CA SOS) to do business in California or having no permanent place of business in California.
- Partnerships or limited liability companies (LLCs) with no permanent place of business in California.
- Any trust without a resident grantor, beneficiary, or trustee, or estates where the decedent was not a California resident.

Foreign refers to non-U.S.

For more information about determining resident status, get FTB Pub. 1031, Guidelines for Determining Resident Status. Military servicemembers have special rules for residency. For more information, get FTB Pub. 1032, Tax Information for Military Personnel.

Permanent Place of Business:
A corporation has a permanent place of business in California if it is organized and existing under the laws of California or if it is a foreign corporation qualified to transact intrastate business by the CA SOS. A corporation that has not qualified to transact intrastate business (e.g., a corporation engaged exclusively in interstate commerce) will be considered as having a permanent place of business in California only if it maintains a permanent office in California that is permanently staffed by its employees.

E Military Spouse Residency Relief Act (MSRRA)

Generally, for tax purposes you are considered to maintain your existing residence or domicile. If a military servicemember and nonmilitary spouse have the same state of domicile, the MSRRA provides:

- A spouse shall not be deemed to have lost a residence or domicile in any state solely by reason of being absent to be with the servicemember serving in compliance with military orders.
- A spouse shall not be deemed to have acquired a residence or domicile in any other state solely by reason of being there to be with the servicemember serving in compliance with military orders.

Domicile is defined as the one place:

- Where you maintain a true, fixed, and permanent home.
- To which you intend to return whenever you are absent.

A military servicemember's nonmilitary spouse is considered a nonresident for tax purposes if the servicemember and spouse have the same domicile outside of California and the spouse is in California solely to be with the servicemember who is serving in compliance with Permanent Change of Station orders.

California may require nonmilitary spouses of military servicemembers to provide proof that they meet the criteria for California personal income tax exemption as set forth in the MSRRA.

Income of a military servicemember's nonmilitary spouse for services performed in California is not California source income subject to state tax if the spouse is in California to be with the servicemember serving in compliance with military orders, and the servicemember and spouse have the same domicile in a state other than California.

For additional information or assistance in determining whether the applicant meets the MSRRA requirements, get FTB Pub. 1032.

Specific Instructions

Payee Instructions

Enter the withholding agent's name.

Enter the payee's information, including the taxpayer identification number (TIN) and check the appropriate TIN box.

You must provide an acceptable TIN as requested on this form. The following are acceptable TINs: social security number (SSN); individual taxpayer identification number (ITIN); federal employer identification number (FEIN); California corporation number (CA Corp no.); or CA SOS file number.

Private Mail Box (PMB) – Include the PMB in the address field. Write "PMB" first, then the box number. Example: 111 Main Street PMB 123.

Foreign Address – Enter the information in the following order: City, Country, Province/Region, and Postal Code. Follow the country's practice for entering the postal code. **Do not** abbreviate the country's name.

Check the box that reflects the reason why the payee is exempt from the California income tax withholding requirement.

Withholding Agent Instructions

Keep Form 590 for your records. **Do not** send this form to the FTB unless it has been specifically requested.

For more information, contact Withholding Services and Compliance, see Additional Information.

The payee must notify the withholding agent if any of the following situations occur:

- The individual payee becomes a nonresident.
- The corporation ceases to have a permanent place of business in California or ceases to be qualified to do business in California.
- The partnership ceases to have a permanent place of business in California.
- The LLC ceases to have a permanent place of business in California.
- The tax-exempt entity loses its tax-exempt status.

If any of these situations occur, then withholding may be required. For more information, get Form 592, Resident and Nonresident Withholding Statement, Form 592-B, Resident and Nonresident Withholding Tax Statement, and Form 592-V, Payment Voucher for Resident and Nonresident Withholding.

Additional Information

For additional information or to speak to a representative regarding this form, call the Withholding Services and Compliance telephone service at:

Telephone: **888**.792.4900
916.845.4900
Fax: 916.845.9512

OR write to:

WITHHOLDING SERVICES AND
COMPLIANCE MS F182
FRANCHISE TAX BOARD
PO BOX 942867
SACRAMENTO CA 94267-0651

You can download, view, and print California tax forms and publications at **ftb.ca.gov**.

OR to get forms by mail write to:

TAX FORMS REQUEST UNIT
FRANCHISE TAX BOARD
PO BOX 307
RANCHO CORDOVA CA 95741-0307

For all other questions unrelated to withholding or to access the TTY/TDD numbers, see the information below.

Internet and Telephone Assistance

Website: **ftb.ca.gov**
Telephone: 800.852.5711 from within the United States
916.845.6500 from outside the United States
TTY/TDD: 800.822.6268 for persons with hearing or speech impairments

Asistencia Por Internet y Teléfono

Sitio web: **ftb.ca.gov**
Teléfono: 800.852.5711 dentro de los Estados Unidos
916.845.6500 fuera de los Estados Unidos
TTY/TDD: 800.822.6268 personas con discapacidades auditivas y del habla

Form **W-9**
(Rev. August 2013)
Department of the Treasury
Internal Revenue Service

Request for Taxpayer Identification Number and Certification

Give Form to the requester. Do not send to the IRS.

Print or type
See **Specific Instructions** on page 2.

Name (as shown on your income tax return)
VAN COOPER & ASSOCIATES, INC

Business name/disregarded entity name, if different from above
N/A

Check appropriate box for federal tax classification:
☐ Individual/sole proprietor ☒ C Corporation ☐ S Corporation ☐ Partnership ☐ Trust/estate

☐ Limited liability company. Enter the tax classification (C=C corporation, S=S corporation, P=partnership) ▶

☐ Other (see instructions) ▶

Exemptions (see instructions):
Exempt payee code (if any)
Exemption from FATCA reporting code (if any)

Address (number, street, and apt. or suite no.)
2000 POWELL ST., SUITE 550

Requester's name and address (optional)

City, state, and ZIP code
EMERYVILLE, CA 94608

List account number(s) here (optional)
N/A

Part I Taxpayer Identification Number (TIN)

Enter your TIN in the appropriate box. The TIN provided must match the name given on the "Name" line to avoid backup withholding. For individuals, this is your social security number (SSN). However, for a resident alien, sole proprietor, or disregarded entity, see the Part I instructions on page 3. For other entities, it is your employer identification number (EIN). If you do not have a number, see *How to get a TIN* on page 3.

Note. If the account is in more than one name, see the chart on page 4 for guidelines on whose number to enter.

Social security number
☐☐☐ - ☐☐ - ☐☐☐☐

Employer identification number
68 - 0284873

Part II Certification

Under penalties of perjury, I certify that:

1. The number shown on this form is my correct taxpayer identification number (or I am waiting for a number to be issued to me), and
2. I am not subject to backup withholding because: (a) I am exempt from backup withholding, or (b) I have not been notified by the Internal Revenue Service (IRS) that I am subject to backup withholding as a result of a failure to report all interest or dividends, or (c) the IRS has notified me that I am no longer subject to backup withholding, and
3. I am a U.S. citizen or other U.S. person (defined below), and
4. The FATCA code(s) entered on this form (if any) indicating that I am exempt from FATCA reporting is correct.

Certification instructions. You must cross out item 2 above if you have been notified by the IRS that you are currently subject to backup withholding because you have failed to report all interest and dividends on your tax return. For real estate transactions, item 2 does not apply. For mortgage interest paid, acquisition or abandonment of secured property, cancellation of debt, contributions to an individual retirement arrangement (IRA), and generally, payments other than interest and dividends, you are not required to sign the certification, but you must provide your correct TIN. See the instructions on page 3.

Sign Here **Signature of U.S. person ▶** **Date ▶** 4-17-14

General Instructions

Section references are to the Internal Revenue Code unless otherwise noted.

Future developments. The IRS has created a page on IRS.gov for information about Form W-9, at *www.irs.gov/w9*. Information about any future developments affecting Form W-9 (such as legislation enacted after we release it) will be posted on that page.

Purpose of Form

A person who is required to file an information return with the IRS must obtain your correct taxpayer identification number (TIN) to report, for example, income paid to you, payments made to you in settlement of payment card and third party network transactions, real estate transactions, mortgage interest you paid, acquisition or abandonment of secured property, cancellation of debt, or contributions you made to an IRA.

Use Form W-9 only if you are a U.S. person (including a resident alien), to provide your correct TIN to the person requesting it (the requester) and, when applicable, to:

1. Certify that the TIN you are giving is correct (or you are waiting for a number to be issued),
2. Certify that you are not subject to backup withholding, or
3. Claim exemption from backup withholding if you are a U.S. exempt payee. If applicable, you are also certifying that as a U.S. person, your allocable share of any partnership income from a U.S. trade or business is not subject to the withholding tax on foreign partners' share of effectively connected income, and
4. Certify that FATCA code(s) entered on this form (if any) indicating that you are exempt from the FATCA reporting, is correct.

Note. If you are a U.S. person and a requester gives you a form other than Form W-9 to request your TIN, you must use the requester's form if it is substantially similar to this Form W-9.

Definition of a U.S. person. For federal tax purposes, you are considered a U.S. person if you are:

- An individual who is a U.S. citizen or U.S. resident alien,
- A partnership, corporation, company, or association created or organized in the United States or under the laws of the United States,
- An estate (other than a foreign estate), or
- A domestic trust (as defined in Regulations section 301.7701-7).

Special rules for partnerships. Partnerships that conduct a trade or business in the United States are generally required to pay a withholding tax under section 1446 on any foreign partners' share of effectively connected taxable income from such business. Further, in certain cases where a Form W-9 has not been received, the rules under section 1446 require a partnership to presume that a partner is a foreign person, and pay the section 1446 withholding tax. Therefore, if you are a U.S. person that is a partner in a partnership conducting a trade or business in the United States, provide Form W-9 to the partnership to establish your U.S. status and avoid section 1446 withholding on your share of partnership income.

In the cases below, the following person must give Form W-9 to the partnership for purposes of establishing its U.S. status and avoiding withholding on its allocable share of net income from the partnership conducting a trade or business in the United States:

- In the case of a disregarded entity with a U.S. owner, the U.S. owner of the disregarded entity and not the entity,
- In the case of a grantor trust with a U.S. grantor or other U.S. owner, generally, the U.S. grantor or other U.S. owner of the grantor trust and not the trust, and
- In the case of a U.S. trust (other than a grantor trust), the U.S. trust (other than a grantor trust) and not the beneficiaries of the trust.

Foreign person. If you are a foreign person or the U.S. branch of a foreign bank that has elected to be treated as a U.S. person, do not use Form W-9. Instead, use the appropriate Form W-8 or Form 8233 (see Publication 515, Withholding of Tax on Nonresident Aliens and Foreign Entities).

Nonresident alien who becomes a resident alien. Generally, only a nonresident alien individual may use the terms of a tax treaty to reduce or eliminate U.S. tax on certain types of income. However, most tax treaties contain a provision known as a "saving clause." Exceptions specified in the saving clause may permit an exemption from tax to continue for certain types of income even after the payee has otherwise become a U.S. resident alien for tax purposes.

If you are a U.S. resident alien who is relying on an exception contained in the saving clause of a tax treaty to claim an exemption from U.S. tax on certain types of income, you must attach a statement to Form W-9 that specifies the following five items:

1. The treaty country. Generally, this must be the same treaty under which you claimed exemption from tax as a nonresident alien.
2. The treaty article addressing the income.
3. The article number (or location) in the tax treaty that contains the saving clause and its exceptions.
4. The type and amount of income that qualifies for the exemption from tax.
5. Sufficient facts to justify the exemption from tax under the terms of the treaty article.

Example. Article 20 of the U.S.-China income tax treaty allows an exemption from tax for scholarship income received by a Chinese student temporarily present in the United States. Under U.S. law, this student will become a resident alien for tax purposes if his or her stay in the United States exceeds 5 calendar years. However, paragraph 2 of the first Protocol to the U.S.-China treaty (dated April 30, 1984) allows the provisions of Article 20 to continue to apply even after the Chinese student becomes a resident alien of the United States. A Chinese student who qualifies for this exception (under paragraph 2 of the first protocol) and is relying on this exception to claim an exemption from tax on his or her scholarship or fellowship income would attach to Form W-9 a statement that includes the information described above to support that exemption.

If you are a nonresident alien or a foreign entity, give the requester the appropriate completed Form W-8 or Form 8233.

What is backup withholding? Persons making certain payments to you must under certain conditions withhold and pay to the IRS a percentage of such payments. This is called "backup withholding." Payments that may be subject to backup withholding include interest, tax-exempt interest, dividends, broker and barter exchange transactions, rents, royalties, nonemployee pay, payments made in settlement of payment card and third party network transactions, and certain payments from fishing boat operators. Real estate transactions are not subject to backup withholding.

You will not be subject to backup withholding on payments you receive if you give the requester your correct TIN, make the proper certifications, and report all your taxable interest and dividends on your tax return.

Payments you receive will be subject to backup withholding if:

1. You do not furnish your TIN to the requester,
2. You do not certify your TIN when required (see the Part II instructions on page 3 for details),
3. The IRS tells the requester that you furnished an incorrect TIN,
4. The IRS tells you that you are subject to backup withholding because you did not report all your interest and dividends on your tax return (for reportable interest and dividends only), or
5. You do not certify to the requester that you are not subject to backup withholding under 4 above (for reportable interest and dividend accounts opened after 1983 only).

Certain payees and payments are exempt from backup withholding. See *Exempt payee code* on page 3 and the separate Instructions for the Requester of Form W-9 for more information.

Also see *Special rules for partnerships* on page 1.

What is FATCA reporting? The Foreign Account Tax Compliance Act (FATCA) requires a participating foreign financial institution to report all United States account holders that are specified United States persons. Certain payees are exempt from FATCA reporting. See *Exemption from FATCA reporting code* on page 3 and the Instructions for the Requester of Form W-9 for more information.

Updating Your Information

You must provide updated information to any person to whom you claimed to be an exempt payee if you are no longer an exempt payee and anticipate receiving reportable payments in the future from this person. For example, you may need to provide updated information if you are a C corporation that elects to be an S corporation, or if you no longer are tax exempt. In addition, you must furnish a new Form W-9 if the name or TIN changes for the account, for example, if the grantor of a grantor trust dies.

Penalties

Failure to furnish TIN. If you fail to furnish your correct TIN to a requester, you are subject to a penalty of $50 for each such failure unless your failure is due to reasonable cause and not to willful neglect.

Civil penalty for false information with respect to withholding. If you make a false statement with no reasonable basis that results in no backup withholding, you are subject to a $500 penalty.

Criminal penalty for falsifying information. Willfully falsifying certifications or affirmations may subject you to criminal penalties including fines and/or imprisonment.

Misuse of TINs. If the requester discloses or uses TINs in violation of federal law, the requester may be subject to civil and criminal penalties.

Specific Instructions

Name

If you are an individual, you must generally enter the name shown on your income tax return. However, if you have changed your last name, for instance, due to marriage without informing the Social Security Administration of the name change, enter your first name, the last name shown on your social security card, and your new last name.

If the account is in joint names, list first, and then circle, the name of the person or entity whose number you entered in Part I of the form.

Sole proprietor. Enter your individual name as shown on your income tax return on the "Name" line. You may enter your business, trade, or "doing business as (DBA)" name on the "Business name/disregarded entity name" line.

Partnership, C Corporation, or S Corporation. Enter the entity's name on the "Name" line and any business, trade, or "doing business as (DBA) name" on the "Business name/disregarded entity name" line.

Disregarded entity. For U.S. federal tax purposes, an entity that is disregarded as an entity separate from its owner is treated as a "disregarded entity." See Regulation section 301.7701-2(c)(2)(iii). Enter the owner's name on the "Name" line. The name of the entity entered on the "Name" line should never be a disregarded entity. The name on the "Name" line must be the name shown on the income tax return on which the income should be reported. For example, if a foreign LLC that is treated as a disregarded entity for U.S. federal tax purposes has a single owner that is a U.S. person, the U.S. owner's name is required to be provided on the "Name" line. If the direct owner of the entity is also a disregarded entity, enter the first owner that is not disregarded for federal tax purposes. Enter the disregarded entity's name on the "Business name/disregarded entity name" line. If the owner of the disregarded entity is a foreign person, the owner must complete an appropriate Form W-8 instead of a Form W-9. This is the case even if the foreign person has a U.S. TIN.

Note. Check the appropriate box for the U.S. federal tax classification of the person whose name is entered on the "Name" line (Individual/sole proprietor, Partnership, C Corporation, S Corporation, Trust/estate).

Limited Liability Company (LLC). If the person identified on the "Name" line is an LLC, check the "Limited liability company" box only and enter the appropriate code for the U.S. federal tax classification in the space provided. If you are an LLC that is treated as a partnership for U.S. federal tax purposes, enter "P" for partnership. If you are an LLC that has filed a Form 8832 or a Form 2553 to be taxed as a corporation, enter "C" for C corporation or "S" for S corporation, as appropriate. If you are an LLC that is disregarded as an entity separate from its owner under Regulation section 301.7701-3 (except for employment and excise tax), do not check the LLC box unless the owner of the LLC (required to be identified on the "Name" line) is another LLC that is not disregarded for U.S. federal tax purposes. If the LLC is disregarded as an entity separate from its owner, enter the appropriate tax classification of the owner identified on the "Name" line.

Other entities. Enter your business name as shown on required U.S. federal tax documents on the "Name" line. This name should match the name shown on the charter or other legal document creating the entity. You may enter any business, trade, or DBA name on the "Business name/disregarded entity name" line.

Exemptions

If you are exempt from backup withholding and/or FATCA reporting, enter in the *Exemptions* box, any code(s) that may apply to you. See *Exempt payee code* and *Exemption from FATCA reporting code* on page 3.

Exempt payee code. Generally, individuals (including sole proprietors) are not exempt from backup withholding. Corporations are exempt from backup withholding for certain payments, such as interest and dividends. Corporations are not exempt from backup withholding for payments made in settlement of payment card or third party network transactions.

Note. If you are exempt from backup withholding, you should still complete this form to avoid possible erroneous backup withholding.

The following codes identify payees that are exempt from backup withholding:

1—An organization exempt from tax under section 501(a), any IRA, or a custodial account under section 403(b)(7) if the account satisfies the requirements of section 401(f)(2)

2—The United States or any of its agencies or instrumentalities

3—A state, the District of Columbia, a possession of the United States, or any of their political subdivisions or instrumentalities

4—A foreign government or any of its political subdivisions, agencies, or instrumentalities

5—A corporation

6—A dealer in securities or commodities required to register in the United States, the District of Columbia, or a possession of the United States

7—A futures commission merchant registered with the Commodity Futures Trading Commission

8—A real estate investment trust

9—An entity registered at all times during the tax year under the Investment Company Act of 1940

10—A common trust fund operated by a bank under section 584(a)

11—A financial institution

12—A middleman known in the investment community as a nominee or custodian

13—A trust exempt from tax under section 664 or described in section 4947

The following chart shows types of payments that may be exempt from backup withholding. The chart applies to the exempt payees listed above, 1 through 13.

IF the payment is for . . .	THEN the payment is exempt for . . .
Interest and dividend payments	All exempt payees except for 7
Broker transactions	Exempt payees 1 through 4 and 6 through 11 and all C corporations. S corporations must not enter an exempt payee code because they are exempt only for sales of noncovered securities acquired prior to 2012.
Barter exchange transactions and patronage dividends	Exempt payees 1 through 4
Payments over $600 required to be reported and direct sales over $5,000[1]	Generally, exempt payees 1 through 5[2]
Payments made in settlement of payment card or third party network transactions	Exempt payees 1 through 4

[1] See Form 1099-MISC, Miscellaneous Income, and its instructions.

[2] However, the following payments made to a corporation and reportable on Form 1099-MISC are not exempt from backup withholding: medical and health care payments, attorneys' fees, gross proceeds paid to an attorney, and payments for services paid by a federal executive agency.

Exemption from FATCA reporting code. The following codes identify payees that are exempt from reporting under FATCA. These codes apply to persons submitting this form for accounts maintained outside of the United States by certain foreign financial institutions. Therefore, if you are only submitting this form for an account you hold in the United States, you may leave this field blank. Consult with the person requesting this form if you are uncertain if the financial institution is subject to these requirements.

A—An organization exempt from tax under section 501(a) or any individual retirement plan as defined in section 7701(a)(37)

B—The United States or any of its agencies or instrumentalities

C—A state, the District of Columbia, a possession of the United States, or any of their political subdivisions or instrumentalities

D—A corporation the stock of which is regularly traded on one or more established securities markets, as described in Reg. section 1.1472-1(c)(1)(i)

E—A corporation that is a member of the same expanded affiliated group as a corporation described in Reg. section 1.1472-1(c)(1)(i)

F—A dealer in securities, commodities, or derivative financial instruments (including notional principal contracts, futures, forwards, and options) that is registered as such under the laws of the United States or any state

G—A real estate investment trust

H—A regulated investment company as defined in section 851 or an entity registered at all times during the tax year under the Investment Company Act of 1940

I—A common trust fund as defined in section 584(a)

J—A bank as defined in section 581

K—A broker

L—A trust exempt from tax under section 664 or described in section 4947(a)(1)

M—A tax exempt trust under a section 403(b) plan or section 457(g) plan

Part I. Taxpayer Identification Number (TIN)

Enter your TIN in the appropriate box. If you are a resident alien and you do not have and are not eligible to get an SSN, your TIN is your IRS individual taxpayer identification number (ITIN). Enter it in the social security number box. If you do not have an ITIN, see *How to get a TIN* below.

If you are a sole proprietor and you have an EIN, you may enter either your SSN or EIN. However, the IRS prefers that you use your SSN.

If you are a single-member LLC that is disregarded as an entity separate from its owner (see *Limited Liability Company (LLC)* on page 2), enter the owner's SSN (or EIN, if the owner has one). Do not enter the disregarded entity's EIN. If the LLC is classified as a corporation or partnership, enter the entity's EIN.

Note. See the chart on page 4 for further clarification of name and TIN combinations.

How to get a TIN. If you do not have a TIN, apply for one immediately. To apply for an SSN, get Form SS-5, Application for a Social Security Card, from your local Social Security Administration office or get this form online at *www.ssa.gov*. You may also get this form by calling 1-800-772-1213. Use Form W-7, Application for IRS Individual Taxpayer Identification Number, to apply for an ITIN, or Form SS-4, Application for Employer Identification Number, to apply for an EIN. You can apply for an EIN online by accessing the IRS website at *www.irs.gov/businesses* and clicking on Employer Identification Number (EIN) under Starting a Business. You can get Forms W-7 and SS-4 from the IRS by visiting IRS.gov or by calling 1-800-TAX-FORM (1-800-829-3676).

If you are asked to complete Form W-9 but do not have a TIN, apply for a TIN and write "Applied For" in the space for the TIN, sign and date the form, and give it to the requester. For interest and dividend payments, and certain payments made with respect to readily tradable instruments, generally you will have 60 days to get a TIN and give it to the requester before you are subject to backup withholding on payments. The 60-day rule does not apply to other types of payments. You will be subject to backup withholding on all such payments until you provide your TIN to the requester.

Note. Entering "Applied For" means that you have already applied for a TIN or that you intend to apply for one soon.

Caution: *A disregarded U.S. entity that has a foreign owner must use the appropriate Form W-8.*

Part II. Certification

To establish to the withholding agent that you are a U.S. person, or resident alien, sign Form W-9. You may be requested to sign by the withholding agent even if items 1, 4, or 5 below indicate otherwise.

For a joint account, only the person whose TIN is shown in Part I should sign (when required). In the case of a disregarded entity, the person identified on the "Name" line must sign. Exempt payees, see *Exempt payee code* earlier.

Signature requirements. Complete the certification as indicated in items 1 through 5 below.

1. Interest, dividend, and barter exchange accounts opened before 1984 and broker accounts considered active during 1983. You must give your correct TIN, but you do not have to sign the certification.

2. Interest, dividend, broker, and barter exchange accounts opened after 1983 and broker accounts considered inactive during 1983. You must sign the certification or backup withholding will apply. If you are subject to backup withholding and you are merely providing your correct TIN to the requester, you must cross out item 2 in the certification before signing the form.

3. Real estate transactions. You must sign the certification. You may cross out item 2 of the certification.

4. Other payments. You must give your correct TIN, but you do not have to sign the certification unless you have been notified that you have previously given an incorrect TIN. "Other payments" include payments made in the course of the requester's trade or business for rents, royalties, goods (other than bills for merchandise), medical and health care services (including payments to corporations), payments to a nonemployee for services, payments made in settlement of payment card and third party network transactions, payments to certain fishing boat crew members and fishermen, and gross proceeds paid to attorneys (including payments to corporations).

5. Mortgage interest paid by you, acquisition or abandonment of secured property, cancellation of debt, qualified tuition program payments (under section 529), IRA, Coverdell ESA, Archer MSA or HSA contributions or distributions, and pension distributions. You must give your correct TIN, but you do not have to sign the certification.

What Name and Number To Give the Requester

For this type of account:	Give name and SSN of:
1. Individual	The individual
2. Two or more individuals (joint account)	The actual owner of the account or, if combined funds, the first individual on the account [1]
3. Custodian account of a minor (Uniform Gift to Minors Act)	The minor [2]
4. a. The usual revocable savings trust (grantor is also trustee)	The grantor-trustee [1]
b. So-called trust account that is not a legal or valid trust under state law	The actual owner [1]
5. Sole proprietorship or disregarded entity owned by an individual	The owner [3]
6. Grantor trust filing under Optional Form 1099 Filing Method 1 (see Regulation section 1.671-4(b)(2)(i)(A))	The grantor*
For this type of account:	**Give name and EIN of:**
7. Disregarded entity not owned by an individual	The owner
8. A valid trust, estate, or pension trust	Legal entity [4]
9. Corporation or LLC electing corporate status on Form 8832 or Form 2553	The corporation
10. Association, club, religious, charitable, educational, or other tax-exempt organization	The organization
11. Partnership or multi-member LLC	The partnership
12. A broker or registered nominee	The broker or nominee
13. Account with the Department of Agriculture in the name of a public entity (such as a state or local government, school district, or prison) that receives agricultural program payments	The public entity
14. Grantor trust filing under the Form 1041 Filing Method or the Optional Form 1099 Filing Method 2 (see Regulation section 1.671-4(b)(2)(i)(B))	The trust

[1] List first and circle the name of the person whose number you furnish. If only one person on a joint account has an SSN, that person's number must be furnished.

[2] Circle the minor's name and furnish the minor's SSN.

[3] You must show your individual name and you may also enter your business or "DBA" name on the "Business name/disregarded entity" name line. You may use either your SSN or EIN (if you have one), but the IRS encourages you to use your SSN.

[4] List first and circle the name of the trust, estate, or pension trust. (Do not furnish the TIN of the personal representative or trustee unless the legal entity itself is not designated in the account title.) Also see *Special rules for partnerships* on page 1.

***Note.** Grantor also must provide a Form W-9 to trustee of trust.

Note. If no name is circled when more than one name is listed, the number will be considered to be that of the first name listed.

Secure Your Tax Records from Identity Theft

Identity theft occurs when someone uses your personal information such as your name, social security number (SSN), or other identifying information, without your permission, to commit fraud or other crimes. An identity thief may use your SSN to get a job or may file a tax return using your SSN to receive a refund.

To reduce your risk:

- Protect your SSN,
- Ensure your employer is protecting your SSN, and
- Be careful when choosing a tax preparer.

If your tax records are affected by identity theft and you receive a notice from the IRS, respond right away to the name and phone number printed on the IRS notice or letter.

If your tax records are not currently affected by identity theft but you think you are at risk due to a lost or stolen purse or wallet, questionable credit card activity or credit report, contact the IRS Identity Theft Hotline at 1-800-908-4490 or submit Form 14039.

For more information, see Publication 4535, Identity Theft Prevention and Victim Assistance.

Victims of identity theft who are experiencing economic harm or a system problem, or are seeking help in resolving tax problems that have not been resolved through normal channels, may be eligible for Taxpayer Advocate Service (TAS) assistance. You can reach TAS by calling the TAS toll-free case intake line at 1-877-777-4778 or TTY/TDD 1-800-829-4059.

Protect yourself from suspicious emails or phishing schemes. Phishing is the creation and use of email and websites designed to mimic legitimate business emails and websites. The most common act is sending an email to a user falsely claiming to be an established legitimate enterprise in an attempt to scam the user into surrendering private information that will be used for identity theft.

The IRS does not initiate contacts with taxpayers via emails. Also, the IRS does not request personal detailed information through email or ask taxpayers for the PIN numbers, passwords, or similar secret access information for their credit card, bank, or other financial accounts.

If you receive an unsolicited email claiming to be from the IRS, forward this message to *phishing@irs.gov*. You may also report misuse of the IRS name, logo, or other IRS property to the Treasury Inspector General for Tax Administration at 1-800-366-4484. You can forward suspicious emails to the Federal Trade Commission at: *spam@uce.gov* or contact them at *www.ftc.gov/idtheft* or 1-877-IDTHEFT (1-877-438-4338).

Visit IRS.gov to learn more about identity theft and how to reduce your risk.

Privacy Act Notice

Section 6109 of the Internal Revenue Code requires you to provide your correct TIN to persons (including federal agencies) who are required to file information returns with the IRS to report interest, dividends, or certain other income paid to you; mortgage interest you paid; the acquisition or abandonment of secured property; the cancellation of debt; or contributions you made to an IRA, Archer MSA, or HSA. The person collecting this form uses the information on the form to file information returns with the IRS, reporting the above information. Routine uses of this information include giving it to the Department of Justice for civil and criminal litigation and to cities, states, the District of Columbia, and U.S. commonwealths and possessions for use in administering their laws. The information also may be disclosed to other countries under a treaty, to federal and state agencies to enforce civil and criminal laws, or to federal law enforcement and intelligence agencies to combat terrorism. You must provide your TIN whether or not you are required to file a tax return. Under section 3406, payers must generally withhold a percentage of taxable interest, dividend, and certain other payments to a payee who does not give a TIN to the payer. Certain penalties may also apply for providing false or fraudulent information.

Client#: 310729 VALICOOP

ACORD™ CERTIFICATE OF LIABILITY INSURANCE

DATE (MM/DD/YYYY) 5/01/2014

THIS CERTIFICATE IS ISSUED AS A MATTER OF INFORMATION ONLY AND CONFERS NO RIGHTS UPON THE CERTIFICATE HOLDER. THIS CERTIFICATE DOES NOT AFFIRMATIVELY OR NEGATIVELY AMEND, EXTEND OR ALTER THE COVERAGE AFFORDED BY THE POLICIES BELOW. THIS CERTIFICATE OF INSURANCE DOES NOT CONSTITUTE A CONTRACT BETWEEN THE ISSUING INSURER(S), AUTHORIZED REPRESENTATIVE OR PRODUCER, AND THE CERTIFICATE HOLDER.

IMPORTANT: If the certificate holder is an ADDITIONAL INSURED, the policy(ies) must be endorsed. If SUBROGATION IS WAIVED, subject to the terms and conditions of the policy, certain policies may require an endorsement. A statement on this certificate does not confer rights to the certificate holder in lieu of such endorsement(s).

PRODUCER
Hub International
HUB Int'l Insurance Serv. Inc.
P.O. Box 4047
Concord, CA 94524-4047

CONTACT NAME:
PHONE (A/C, No, Ext): 925 609-6500 FAX (A/C, No): 925 609-6550
E-MAIL ADDRESS:

INSURER(S) AFFORDING COVERAGE	NAIC #
INSURER A : Hanover Insurance Company	22292
INSURER B : Navigators Specialty Ins Co	36056
INSURER C : Travelers Prop Cas Co of Amer	25674
INSURER D : Continental Casualty Company	20443
INSURER E : Massachusetts Bay Insurance Co	22306
INSURER F :	

INSURED
Vali Cooper & Associates, Inc.
2000 Powell Street, Suite 550
Emeryville, CA 94608

COVERAGES CERTIFICATE NUMBER: REVISION NUMBER:

THIS IS TO CERTIFY THAT THE POLICIES OF INSURANCE LISTED BELOW HAVE BEEN ISSUED TO THE INSURED NAMED ABOVE FOR THE POLICY PERIOD INDICATED. NOTWITHSTANDING ANY REQUIREMENT, TERM OR CONDITION OF ANY CONTRACT OR OTHER DOCUMENT WITH RESPECT TO WHICH THIS CERTIFICATE MAY BE ISSUED OR MAY PERTAIN, THE INSURANCE AFFORDED BY THE POLICIES DESCRIBED HEREIN IS SUBJECT TO ALL THE TERMS, EXCLUSIONS AND CONDITIONS OF SUCH POLICIES. LIMITS SHOWN MAY HAVE BEEN REDUCED BY PAID CLAIMS.

INSR LTR	TYPE OF INSURANCE	ADDL INSR	SUBR WVD	POLICY NUMBER	POLICY EFF (MM/DD/YYYY)	POLICY EXP (MM/DD/YYYY)	LIMITS	
A	GENERAL LIABILITY			ZHF8970089	12/30/2013	12/30/2014	EACH OCCURRENCE	$2,000,000
	X COMMERCIAL GENERAL LIABILITY						DAMAGE TO RENTED PREMISES (Ea occurrence)	$1,000,000
	CLAIMS-MADE X OCCUR						MED EXP (Any one person)	$10,000
	X Ded: 0						PERSONAL & ADV INJURY	$2,000,000
							GENERAL AGGREGATE	$4,000,000
	GEN'L AGGREGATE LIMIT APPLIES PER:						PRODUCTS - COMP/OP AGG	$4,000,000
	POLICY X PRO-JECT X LOC							$
E	AUTOMOBILE LIABILITY			ADF8952855	12/30/2013	12/30/2014	COMBINED SINGLE LIMIT (Ea accident)	$1,000,000
	X ANY AUTO						BODILY INJURY (Per person)	$
	ALL OWNED AUTOS / SCHEDULED AUTOS						BODILY INJURY (Per accident)	$
	X HIRED AUTOS / X NON-OWNED AUTOS						PROPERTY DAMAGE (Per accident)	$
	X Ded: 0							$
B	UMBRELLA LIAB X OCCUR			SE13EXC701858IC	12/30/2013	12/30/2014	EACH OCCURRENCE	$10,000,000
	X EXCESS LIAB CLAIMS-MADE						AGGREGATE	$10,000,000
	DED X RETENTION $0							$
C	WORKERS COMPENSATION AND EMPLOYERS' LIABILITY			PJUB8464L16213	12/30/2013	12/30/2014	X WC STATU-TORY LIMITS / OTH-ER	
	ANY PROPRIETOR/PARTNER/EXECUTIVE OFFICER/MEMBER EXCLUDED? Y / N	N / A					E.L. EACH ACCIDENT	$1,000,000
	(Mandatory in NH) If yes, describe under DESCRIPTION OF OPERATIONS below						E.L. DISEASE - EA EMPLOYEE	$1,000,000
							E.L. DISEASE - POLICY LIMIT	$1,000,000
D	PROFESSIONAL LIAB Claims-Made			AEH288342192	12/30/2013	12/30/2014	Per Claim: $10,000,000 Aggregate: $10,000,000 Ded: $35,000	

DESCRIPTION OF OPERATIONS / LOCATIONS / VEHICLES (Attach ACORD 101, Additional Remarks Schedule, if more space is required)

Re: PN: T15029032, West Tunnel Ramps Access.
The City of Sacramento, its officials, employees and volunteers as Additional Insured as respects General Liability & Auto Liability per attached forms 421-0778 0909 & CA2048 0299; and coverage applies on a Primary basis per 421-0452 0607 & 461-0479 1212. General Liability & Auto Liability Separation of Insureds applies per CG0001 1207 (pg. 12 of 16) & CA0001 0306 (pg. 10 of 12). Workers Compensation Waiver of
(See Attached Descriptions)

CERTIFICATE HOLDER

City of Sacramento
Public Works; Engineering Svcs Division
Attn: Brenda Kee
915 I Street, Room 2000
Sacramento, CA 95814-2702

CANCELLATION

SHOULD ANY OF THE ABOVE DESCRIBED POLICIES BE CANCELLED BEFORE THE EXPIRATION DATE THEREOF, NOTICE WILL BE DELIVERED IN ACCORDANCE WITH THE POLICY PROVISIONS.

AUTHORIZED REPRESENTATIVE

© 1988-2010 ACORD CORPORATION. All rights reserved.

DESCRIPTIONS (Continued from Page 1)

Subrogation in favor of the City of Sacramento applies per WC990376. All as required by written contract.

"Should the policies be cancelled before the expiration date, Hub International Insurance Services Inc. (Hub), independent of any rights which may be afforded within the policies to the certificate holder named below, will provide to such certificate holder notice of such cancellation within thirty (30) days of the cancellation date, except in the event the cancellation is due to non-payment of premium, in which case Hub will provide to such certificate holder notice of such cancellation within ten (10) days of the cancellation date."

VALI COOPER & ASSOCIATES INC ZHF 8970089

HUB INTERNATIONAL INS

Commercial General Liability Coverage Part Declaration

Audit Frequency: Annual

Limits of Insurance:	
General Aggregate Limit	$4,000,000
Products-Completed Operations are Included in the General Aggregate Limit	
Each Occurrence Limit	$2,000,000
Personal and Advertising Injury Limit	$2,000,000
Fire Damage Limit, Any One Fire	$1,000,000
Medical Expense Limit, Any One Person	$5,000
General Liability Deductible:	
Total Advance Commercial General Liability Premium	$35,459.00

Forms Applicable to General Liability Coverage Parts:

Form Number	Edition Date	Description
221-0163	10/03	MANUSCRIPTED FORM
421-0022	12/90	Asbestos Liability Exclusion
421-0037	06/95	Lead Poisoning Liability Exclusion
421-0307	10/03	Change Endorsement Form
421-0452	06/07	Other Insurance-Primary and Non-Contributory (additional Insured)
421-0778	09/09	California Commercial General Liability Special Broadening Endorsement
421-0803	12/09	Broadened Coverage For Non-Owned Watercraft
421-0805	12/09	Broadened Coverage For Newly Acquired Or Formed Organizations
421-0806	12/09	Property Damage To Your Work
421-0820	12/09	Exclusion- Infringement Of Copyright, Patent, Trademark Or Trade Secret - Changes
421-0832	12/09	Broadened Property Damage - Rented Premises
421-1471	10/10	Broadened Coverage For Non-Owned Aircraft - Hired, Chartered Or Loaned With Paid Crew
CG 00 01	12/07	Commercial General Liability Coverage Form
CG 00 68	05/09	Recording And Distribution of Material or Information In Violation of Law Exclusion
CG 04 35	12/07	Employee Benefits Liability Coverage
CG 20 10	07/04	Additional Insured - Owners, Lessees or Contractors - Scheduled Person or Organization
CG 20 11	01/96	Additional Insured - Managers or Lessors of Premises
CG 20 37	07/04	Additional Insured - Owners, Lessees or Contractors - Completed Operations

Authorized Representative Agent

VALI COOPER & ASSOCIATES INC ZHF 8970089

HUB INTERNATIONAL INS

Commercial General Liability Classification Schedule Declaration

Forms Applicable to General Liability Coverage Parts:

Form Number	Edition Date	Description
CG 21 47	12/07	Employment - Related Practices Exclusion
CG 21 52	07/98	Exclusion - Financial Services
CG 21 55	09/99	Total Pollution With a Hostile Fire Exception
CG 21 67	12/04	Fungi or Bacteria Exclusion
CG 21 70	01/08	Cap On Losses From Certified Acts Of Terrorism
CG 21 76	01/08	Exclusion of Punitive Damages Related To a Certified Act of Terrorism
CG 21 96	03/05	Silica or Silica-Related Dust Exclusion
CG 22 33	07/98	Exclusion - Testing or Consulting Errors and Omissions
CG 22 34	07/98	Exclusion - Construction Management Errors and Omissions
CG 22 43	07/98	Exclusion - Engineers, Architects or Surveryors Professional Liability
CG 24 04	05/09	Waiver of Transfer of Rights of Recovery Against Others to Us
CG 24 17	10/01	Contractual Liability - Railroads
CG 25 03	05/09	Designated Construction Project (s) General Aggregate Limit
CG 32 34	01/05	California Changes

THIS ENDORSEMENT CHANGES THE POLICY. PLEASE READ IT CAREFULLY.

It is hereby agreed upon, and understood, that the Commercial General Liability limits are as listed below:

General Aggregate Limit : $4,000,000

Products - Completed Operations Limit - $4,000,000

Each Occurrence Limit : $2,000,000

Personal Advertising Injury Limit : $2,000,000

Fire Damage Limit, Any One Fire : $1,000,000

Medical Expense Limit, Any One Person : $5,000

All other terms & conditions remain unchanged.

Nothing herein contained shall be held to vary, alter, waive or extend any of the terms, conditions, agreements or limitations of the policy other than as above stated.

(Completion of the following, including countersignature, is required to make this endorsement effective only when it is issued subsequent to preparation of the Policy.)

Effective 12/30/2013 this endorsement forms a part of Policy No. ZHF-8970089

Issued to Vali Cooper & Associates Inc

By

Date of Issue 05/01/2014 Countersigned by _____

Authorized Representative of the Company

221-0163 (4-90)

THIS ENDORSEMENT CHANGES THE POLICY. PLEASE READ IT CAREFULLY.

CALIFORNIA COMMERCIAL GENERAL LIABILITY SPECIAL BROADENING ENDORSEMENT

This endorsement modifies insurance provided under the following:

COMMERCIAL GENERAL LIABILITY COVERAGE PART

SUMMARY OF COVERAGES

1.	Additional Insured by Contract, Agreement or Permit	Included
2.	Additional Insured - Broad Form Vendors	Included
3.	Aggregate Limit per Location	Included
4.	Alienated Premises	Included
5.	Bodily Injury Redefined	Included
6.	Broad Form Property Damage - Borrowed Equipment, Customers Goods & Use of Elevators	Included
7.	Extended Property Damage	Included
8.	Incidental Malpractice (Employed nurses, EMT's & paramedics)	Included
9.	Knowledge of Occurrence	Included
10.	Liberalization Clause	Included
11.	Medical Payments - Increased Limit	$ 10,000
12.	Mobile Equipment Redefined	Included
13.	Newly Acquired or Formed Organizations - Covered until end or policy period	Included
14.	Non-owned Watercraft	51 ft.
15.	Personal Injury - Broad Form	Included
16.	Product Recall Expense	
	- Each Occurrence Limit	$ 25,000
	- Aggregate Limit	$ 50,000
17.	Property Damage Legal Liability (Fire, Lighting, Explosion, Smoke or Leakage Damage)	$ 500,000
18.	Supplementary Payments Increased Limits	
	- Bail Bonds	$ 2,500
	- Loss of Earnings	$ 300
19.	Unintentional Failure to Disclose Hazards	Included
20.	Unintentional Failure to Notify	Included

This endorsement amends coverages provided under the Commercial General Liability Coverage Form through new coverages, higher limits and broader coverage grants.

1. Additional Insured by Contract, Agreement or Permit

Under **Section II - Who Is An insured,** Paragraph **4.** is added as follows:

4. a. Any person or organization with whom you agreed, because of a written contract, written agreement or permit to provide insurance, is an insured, but only with respect to:

(1) "Your work" for the additional insured(s) at the location designated in the contract, agreement or permit; or

(2) Premises you own, rent, lease or occupy. This insurance applies on a primary basis if that is required by the written contract, written agreement or permit.

b. This provision does not apply:

(1) Unless the written contract or written agreement has been executed or permit has been issued prior to the "bodily injury", "property damage", "personal injury" or "advertising injury".

Includes copyrighted material of ISO Insurance Services Office, Inc. with its permission.

(2) To any person or organization included as an insured by an endorsement issued by us and made part of this Coverage Part.

(3) To any person or organization included as an insured under item 2 of this endorsement.

(4) To any lessor of equipment:

(a) After the equipment lease expires; or

(b) If the "bodily injury", "property damage", "personal injury" or "advertising injury" arises out of sole negligence of the lessor.

(5) To any:

(a) Owners or other interests from whom land has been leased which takes place after the lease for the land expires; or

(b) Managers or lessors of premises if:

(i) The occurrence takes place after you cease to be a tenant in that premises; or

(ii) The "bodily injury", "property damage", "personal injury" or "advertising injury" arises out of structural alterations, new construction or demolition operations performed by or on behalf of the manager or lessor.

2. **Additional Insured - Broad Form Vendors**

Under **Section II - Who Is An Insured,** Paragraph **5.** is added as follows:

5. a. Any person or organization with whom you agreed, because of a written contract or written agreement to provide insurance, but only with respect to "bodily injury" or "property damage" arising out of "your products" which are distributed or sold in the regular course of the vendor's business, subject to the following additional exclusions:

b. The insurance afforded the vendor does not apply to:

(1) "Bodily injury" or "property damage" for which the vendor is obligated to pay damages by reasons of the assumption of liability in a contract or agreement. This exclusion does not apply to liability for damages that the insured would have in the absence of the contract or agreement;

(2) Any express warranty unauthorized by you;

(3) Any physical or chemical change in the product made intentionally by the vendor;

(4) Repackaging, unless unpacked solely for the purpose of inspection, demonstration, testing, or the substitution of parts under instruction from the manufacturer, and then repackaged in the original container;

(5) Any failure to make such inspection, adjustments, tests or servicing as the vendor has agreed to make or normally undertakes to make in the usual course of business in connection with the sale of the product;

(6) Demonstration, installation, servicing or repair operations, except such operations performed at the vendor's premises in connection with the sale of the product;

(7) Products which, after distribution or sale by you, have been labeled or relabeled or used as a container, part or ingredient of any thing or substance by or for the vendor.

c. This insurance does not apply to any insured person or organization, from whom you have acquired such products, or any ingredient, part or container, entering into, accompanying or containing such products.

3. **Aggregate Limit Per Location**

(1) Under **Section III - Limits of Insurance** the General Aggregate Limit applies separately to each of your "locations" owned by or rented to you.

(2) Under **Section V - Definitions,** definition **23.** is added as follows:

23. "Location" means premises involving the same or connecting lots, or premises whose connection is interrupted only by a street, roadway, waterway or right-of-way of a railroad.

4. **Alienated Premises**

Under **Section I - Coverage A,** paragraph **2. Exclusions, j. (2)** is replaced in its entirety with the following:

(2) Premises you sell, give away or abandon, if the "property damage" arises out of any part of those premises and occurred from hazards that were known by you, or should have reasonably been known by you, at the time the property was transferred or abandoned.

5. **Bodily Injury Redefined**

Under **Section V - Definitions**, definition **3.** "bodily injury" is replaced in its entirety with the following:

Includes copyrighted material of ISO Insurance Services Office, Inc. with its permission.

3. "Bodily injury" means bodily injury, sickness or disease sustained by a person. This includes mental anguish, mental injury, shock, fright or death resulting from "bodily injury", sickness or disease.

6. **Broad Form Property Damage - Borrowed Equipment, Customers Goods, Use of Elevators**

(1) Under **Section I - Coverage A,** paragraph **2. Exclusion j.** is amended as follows:

Paragraph **(4)** does not apply to "property damage" to borrowed equipment while at a jobsite and not being used to perform operations.

Paragraphs **(3), (4)** and **(6)** do not apply to "property damage" to "customers goods" while on your premises nor do they apply to the use of elevators at premises you own, rent, lease or occupy.

(2) Under **Section V - Definitions,** definition **24.** is added as follows:

24. "Customers goods" means property of your customer on your premises for the purpose of being:

a. worked on; or

b. used in your manufacturing process.

(3) The insurance afforded under this provision is excess over any other valid and collectible property insurance (including deductible) available to the insured whether primary, excess, contingent or on any other basis.

7. **Extended Property Damage**

Under **Section I - Coverage A,** paragraph **2. Exclusions,** Exclusion **a.** is replaced in its entirety with the following:

a. "Bodily injury" or "property damage" expected or intended from the standpoint of the insured. This exclusion does not apply to "bodily injury" or "property damage" resulting from the use of reasonable force to protect persons or property.

8. **Incidental Malpractice - Employed Nurses, EMT's and Paramedics**

Under **Section II - Who Is An Insured,** paragraph **2.a.(1)(d)** does not apply to a nurse, emergency medical technician or paramedic employed by you if you are not engaged in the business or occupation of providing medical, paramedical, surgical, dental, x-ray or nursing services.

9. **Knowledge of Occurrence**

Under **Section IV - Commercial General Liability Conditions,** Condition **2 - Duties in the Event of Occurrence, Offense, Claim or Suit,** paragraph **e.** is added as follows:

e. Notice of an "occurrence", offense, claim or "suit" will be considered knowledge of the insured if reported to an individual named insured, partner, executive officer or an "employee" designated by you to give us such a notice.

10. **Liberalization Clause**

Under **Section IV - Commercial General Liability Conditions,** condition **10.** is added as follows:

10. Liberalization Clause

If we adopt any revision that would broaden the coverage under this Coverage Form without additional premium, within 45 days prior to or during the policy period, the broadened coverage will immediately apply to this Coverage Part.

11. **Medical Payments - Increased Limits**

(1) Under **Section I - Coverage C, paragraph a. (3)(b)** is replaced in its entirety by the following:

(3)(b) The expenses are incurred and reported to us within three years of the date of the accident; and

(2) Under **Section III - Limits of Insurance,** paragraph **7.** is replaced in its entirety by the following:

7. Subject to 5. above, the higher of:

a. $10,000; or

b. The amount shown in the Declarations for Medical Expense Limit is the most we will pay under Coverage C for all medical expenses because of "bodily injury" sustained by one person.

(3) This coverage does not apply if **Coverage C - Medical Payments** is excluded either by the provisions of the Coverage Part or by endorsement.

12. **Mobile Equipment Redefined**

Under **Section V - Definitions,** definition **12,** Mobile Equipment, paragraph **f.(1)(a)(b)(c)** does not apply to self-propelled vehicles of less than 1,000 pounds gross vehicle weight.

13. **Newly Acquired Or Formed Organizations**

Under **Section II - Who Is An Insured,** paragraph

Includes copyrighted material of ISO Insurance Services Office, Inc. with its permission.

3.a. is replaced in its entirety by the following:

a. Coverage under this provision is afforded only until the end of the policy period.

14. Non-Owned Watercraft

Under **Section I - Coverage A,** paragraph **2 Exclusions, g.(2)** is replaced in its entirety by the following:

(2) A watercraft you do not own that is:

(a) Less than 51 feet long; and

(b) Not being used to carry persons or property for a charge;

This provision applies to any person, who with your consent, either uses or is responsible for the use of a watercraft.

15. Personal Injury - Broad Form

(1) Under **Section I - Coverage B,** paragraph **2.e.** is deleted in its entirety.

(2) Under **Section V - Definitions,** definition **14,** paragraph **b.** is replaced in its entirety by the following:

b. Malicious prosecution or abuse of process.

(3) Under **Section V - Definitions,** definition **14,** paragraph **h.** is added as follows:

h. Discrimination or humiliation (unless insurance thereof is prohibited by law) that results in injury to the feelings or reputation of a natural person, but only if such discrimination or humiliation is:

(1) Not done intentionally by or at the direction of:

(a) The insured;

(b) Any officer of the corporation, director, stockholder, partner or member of the insured; and

(2) Not directly or indirectly related to an "employee", not to the employment, prospective employment or termination of any person or persons by an insured.

(4) This coverage does not apply if **Coverage B - Personal and Advertising Injury Liability** is excluded either by the provisions of the Coverage Part of by endorsement.

16. Product Recall Expense

(1) Under **Section I - Coverage A,** paragraph **2 Exclusions, n.** is replaced in its entirety by the following:

n. Recall of Products, Work or Impaired Property

Damages claimed for any loss, cost or expense incurred by you or others for the loss of use, withdrawal, recall, inspection, repair, replacement, adjustment, removal or disposal of:

(1) "Your product";

(2) "Your work"; or

(3) "Impaired property";

if such product, work, or property is withdrawn or recalled from the market or from use by any person or organization because of a known or suspected defect, deficiency, inadequacy or dangerous condition in it, but this exclusion does not apply to "product recall expenses" that you incur for the "covered recall" of "your product". The exception to the exclusion does not apply to "Product recall expenses" resulting from:

(1) Failure of any products to accomplish their intended purpose;

(2) Breach of warranties of fitness, quality, durability or performance;

(3) Loss of customer approval, or any cost incurred to regain customer approval;

(4) Redistribution or replacement of "your product" which has been recalled by like products or substitutes;

(5) Caprice or whim of the insured;

(6) A condition likely to cause loss of which any insured knew or had reason to know at the inception of this insurance;

(7) Asbestos, including loss, damage or clean up resulting from asbestos or asbestos containing materials;

(8) Recall of "your products" that have no known or suspected defect solely because a known or suspected defect in another of "your products" has been found.

(2) Under **Section II - Who Is An Insured,** paragraph **3.d.** is added as follows:

d. Coverage A does not apply to "product recall expense" arising out of any withdrawal or recall that occurred before you acquired or formed the organization.

(3) Under **Section III - Limits of Insurance,** paragraph **8.** is added as follows:

8. The Limits of Insurance and rules stated below fix the most we will pay under this coverage part.

Includes copyrighted material of ISO Insurance Services Office, Inc. with its permission.

(1) The Aggregate Limit is the most we will reimburse you for the sum of all "product recall expenses" incurred for all "product recall expenses" initiated during the policy period.

(2) The Each Occurrence Limit shown in the Summary of Coverages Declaration is the most we will pay in connection with any one defect or deficiency.

(a) All "product recall expenses" in connection with substantially the same general harmful condition will be deemed to arise out of the same defect or deficiency and considered one occurrence.

(b) Any amount reimbursed for "product recall expenses" in connection with any one occurrence will reduce the amount of the Aggregate Limit available for reimbursement of "product recall expenses" in connection with any other defect or deficiency.

(c) If the Aggregate Limit has been reduced by reimbursement of "product recall expenses" to an amount that is less than the Each Occurrence Limit, the remaining Aggregate Limit is the most that will be available for reimbursement of "product recall expenses" in connection with any other defect or deficiency.

The Limits of Insurance of Product Recall Expense apply separately to each consecutive annual period and to any remaining period of less than 12 months, starting with the beginning of the policy period shown in the Declarations, unless the policy period is extended after issuance for an additional period of less than 12 months. In that case, the additional period will be deemed part of the last preceding period for the purposes of determining the Limits of Insurance.

(3) A Deductible of $500 applies for Each Occurrence.

(4) Under **Section IV - Commercial General Liability Conditions,** Condition **2 - Duties in the Event of Occurrence, Offense, Claim or Suit,** paragraph **f.** is added as follows:

f. You must see to it that the following are done in the event of an actual or anticipated "covered recall" that may result in "product recall expense":

(1) Give us prompt notice of any discovery or notification that "your product" must be withdrawn or recalled. Include a description of "your product" and the reason for the withdrawal or recall;

(2) Cease any further release, shipment, consignment or any other method of distribution of like or similar products until it has been determined that all such products are free from defects that could be a cause of loss under this insurance.

(5) Under **Section V - Definitions,** the following definitions are added:

25. "Covered recall," means a recall made necessary because you or a government body has determined that a known or suspected defect, deficiency, inadequacy, or dangerous condition in "your product" has resulted or will result in "bodily injury" or "property damage".

26. "Product recall expense" means:

a. Necessary and reasonable expenses for:

(1) Communications, including radio or television announcements or printed advertisements including stationery, envelopes and postage;

(2) Shipping the recalled products from any purchaser, distributor or user to the place or places designated by you;

(3) Remuneration paid to your regular "employees" for necessary overtime;

(4) Hiring additional persons, other than your regular "employees";

(5) Expenses incurred by "employees" including transportation and accommodations;

(6) Expenses to rent additional warehouse or storage space;

(7) Disposal of "your product", but only to the extent that specific methods of destruction other than those employed for trash discarding or disposal are required to avoid "bodily injury" or "property damage" as a result of such disposal;

You incur exclusively for the purpose of recalling "your product"; and

b. Your lost profit resulting from such "covered recall".

Includes copyrighted material of ISO Insurance Services Office, Inc. with its permission.

17. **Property Damage Legal Liability (Fire, Lightning, Explosion, Smoke or Leakage from Fire Protective Systems Damage)**

(1) The word **fire** is changed to **fire, lightning, explosion, smoke and leakage from fire protective systems** where it appears in the Limits of Insurance section of the Declarations for the Commercial General Liability Coverage Part.

(2) Under **Section I - Coverage A,** the last paragraph (after the exclusions) is replaced in its entirety by the following:

Exclusions c. through n. do not apply to damage by fire, lightning, explosion, smoke or leakage from fire protective systems to premises while rented to you or temporarily occupied by you with the permission of the owner. A separate limit of insurance applies to this coverage as described in LIMITS OF INSURANCE (SECTION III). This limit will apply to all damage proximately caused by the same event, whether such damage results from fire, lightning, explosion, smoke or leakage from fire protective systems or any combination of the five.

(3) Under **Section III - Limits Of Insurance,** paragraph **6.** is replaced in its entirety by the following:

6. Subject to 5. above, the higher of:

a. $500,000; or

b. The Fire, Lightning, Explosion, Smoke or Leakage from Fire Protective Systems Damage Limit shown in the Declarations is the most we will pay under Coverage A for damages because of "property damage" from fire, lightning, explosion, smoke and leakage from fire protective systems to premises, while rented to you or temporarily occupied by you with permission of the owner.

(4) Under **Section IV - Commercial General Liability Conditions,** Condition **4. Other Insurance,** paragraph **(1)(a)(ii)** is replaced by the following:

(ii) That is fire, lightning, explosion, smoke or leakage from fire protective systems insurance for premises rented to you or temporarily occupied by you with permission of the owner; or

(5) Under **Section V - Definitions,** definition **9. "Insured contract", a.** is replaced in its entirety by the following:

a. A contract for a lease of premises. However, that portion of the contract for a lease of premises that indemnifies any person or organization for damage by fire, lightning, explosion, smoke or leakage from fire protective systems to premises while rented to you or temporarily occupied by you with permission of the owner is not an "insured contract".

(6) This coverage does not apply if Fire Damage Legal Liability of **Coverage A** is excluded either by the provisions of the Coverage Part or by endorsement.

18. **Supplementary Payments Increased Limits**

Under **Section I - Supplementary Payments, Coverages A and B,** paragraphs **1.b.** and **1.d.** are replaced in their entirety as follows:

1.b. Up to $2,500 for cost of bail bonds required because of accidents or traffic law violations arising out of the use of any vehicle to which the Bodily Injury Liability Coverage applies. We do not have to furnish these bonds.

1.d. All reasonable expenses incurred by the insured at our request to assist us in the investigation or defense of the claim or "suit", including actual loss of earnings up to $300 a day because of time off from work.

19. **Unintentional Failure to Disclose Hazards**

Under **Section IV - Commercial General Liability Conditions,** Condition **6. - Representations,** paragraph **d.** is added as follows:

d. We will not disclaim coverage under this Coverage Part if you fail to disclose all hazards existing as of the inception date of the policy provided such failure is not intentional.

20. **Unintentional Failure to Notify**

Under **Section IV - Commercial General Liability Conditions,** Condition **2. - Duties in the Event of Occurrence, Offense, Claim or Suit,** paragraph **g.** is added as follows:

g. Your rights afforded under this policy shall not be prejudiced if you fail to give us notice of an "occurrence", offense, claim or "suit", solely due to your reasonable and documented belief that the "bodily injury" or "property damage" is not covered under this policy.

Includes copyrighted material of ISO Insurance Services Office, Inc. with its permission.

POLICY NUMBER: ADF8952855

COMMERCIAL AUTO
CA 20 48 02 99

THIS ENDORSEMENT CHANGES THE POLICY. PLEASE READ IT CAREFULLY.

DESIGNATED INSURED

This endorsement modifies insurance provided under the following:

BUSINESS AUTO COVERAGE FORM
GARAGE COVERAGE FORM
MOTOR CARRIER COVERAGE FORM
TRUCKERS COVERAGE FORM

With respect to coverage provided by this endorsement, the provisions of the Coverage Form apply unless modified by this endorsement.

This endorsement identifies person(s) or organization(s) who are "insureds" under the Who Is An Insured Provision of the Coverage Form. This endorsement does not alter coverage provided in the Coverage Form.

This endorsement changes the policy effective on the inception date of the policy unless another date is indicated below.

Endorsement Effective 12/30/2013	Countersigned By:
Named Insured: VALI COOPER & ASSOCIATES INC	(Authorized Representative)

SCHEDULE

Name of Person(s) or Organization(s): BLANKET AS REQUIRED BY WRITTEN CONTRACT.

(If no entry appears above, information required to complete this endorsement will be shown in the Declarations as applicable to the endorsement.)

Each person or organization shown in the Schedule is an "insured" for Liability Coverage, but only to the extent that person or organization qualifies as an "insured" under the Who Is An Insured Provision contained in **Section II** of the Coverage Form.

Copyright, Insurance Services Office, Inc., 1998

THIS ENDORSEMENT CHANGES THE POLICY. PLEASE READ IT CAREFULLY.

Other Insurance – Primary and Non-Contributory
(Additional Insured)

This endorsement modifies insurance provided under the following:

COMMERCIAL GENERAL LIABILITY COVERAGE PART

The following is added to **Section IV – Commercial General Liability Conditions**

4. Other Insurance

a. Additional Insureds

If you agree in a written contract, written agreement or permit that the insurance provided to any person or organization included as an Additional Insured under **Section II – Who is An Insured**, is primary and non-contributory, the following applies:

If other valid and collectible insurance is available to the Additional Insured for a loss we cover under Coverages **A** or **B** of this Coverage Part, our obligations are limited as follows:

1. Primary Insurance

This insurance is primary to other insurance that is available to the Additional Insured which covers the Additional Insured as a Named Insured. We will not seek contribution from any other insurance available to the Additional Insured except:

i. For the sole negligence of the Additional Insured;

ii. when the Additional Insured is an Additional Insured under another primary liability policy; or

iii. when **2.** below applies.

If this insurance is primary, our obligations are not affected unless any of the other insurance is also primary. Then, we will share with all that other insurance by the method described in **3.** below.

2. Excess Insurance

This insurance is excess over:

(1) Any of the other insurance, whether primary, excess, contingent or on any other basis:

(a) That is Fire, Extended Coverage, Builder's Risk, Installation Risk or similar coverage for "your work";

(b) That is Fire insurance for premises rented to the Additional Insured or temporarily occupied by the Additional Insured with permission of the owner;

(c) That is insurance purchased by the Additional Insured to cover the Additional Insured's liability as a tenant for "property damage" to premises rented to the Additional Insured or temporarily occupied by the Additional with permission of the owner; or

(d) If the loss arises out of the maintenance or use of aircraft, "autos" or watercraft to the extent not subject to Exclusion **g.** of Section **I** – Coverage **A** – Bodily Injury And Property Damage Liability.

When this insurance is excess, we will have no duty under Coverages **A** or **B** to defend the insured against any "suit" if any other insurer has a duty to defend the insured against that "suit". If no other insurer defends, we will undertake to do so, but we will be entitled to the insured's rights against all those other insurers.

When this insurance is excess over other insurance, we will pay only our share of the amount of the loss, if any, that exceeds the sum of:

Includes copyrighted material of Insurance Services Offices, Inc., with its permission

(1) The total amount that all such other insurance would pay for the loss in the absence of this insurance; and

(2) The total of all deductible and self-insured amounts under all that other insurance.

We will share the remaining loss, if any, with any other insurance that is not described in this Excess Insurance provision and was not bought specifically to apply in excess of the Limits of Insurance shown in the Declarations of this Coverage Part.

3. Method Of Sharing

If all of the other insurance permits contribution by equal shares, we will follow this method also. Under this approach each insurer contributes equal amounts until it has paid its applicable limit of insurance or none of the loss remains, whichever comes first.

If any of the other insurance does not permit contribution by equal shares, we will contribute by limits. Under this method, each insurer's share is based on the ratio of its applicable limit of insurance to the total applicable limits of insurance of all insurers.

Includes copyrighted material of Insurance Services Offices, Inc., with its permission

THIS ENDORSEMENT CHANGES THE POLICY. PLEASE READ IT CAREFULLY.

DESIGNATED ADDITIONAL INSURED – PRIMARY AND NON-CONTRIBUTORY

This endorsement modifies insurance provided under the following:

BUSINESS AUTO COVERAGE PART

A. The following is added to **SECTION IV – BUSINESS AUTO CONDITIONS,** Paragraph **B. General Conditions,** subparagraph **5. Other Insurance:**

Primary and Non-Contributory

If you agree in a written contract, written agreement or written permit that the insurance provided to a person or organization who qualifies as an additional "insured" under **SECTION II – LIABILITY COVERAGE,** Paragraph **A.1. Who Is An Insured** is primary and non-contributory, the following applies:

The liability coverage provided by this Coverage Part is primary to any other insurance available to the additional "insured" as a Named Insured. We will not seek contribution from any other insurance available to the additional "insured" except:

(1) For the sole negligence of the additional "insured"; or

(2) For negligence arising out of the ownership, maintenance or use of any "auto" not owned by the additional "insured" or by you, unless that "auto" is a "trailer" connected to an "auto" owned by the additional "insured" or by you; or

(3) When the additional "insured" is also an additional "insured" under another liability policy.

B. This endorsement will apply only if the "accident" occurs:

1. During the policy period;

2. Subsequent to the execution of the written contract or written agreement or the issuance of the written permit; and

3. Prior to the expiration of the period of time that the written contract, written agreement or written permit requires such insurance to be provided to the additional "insured".

C. Coverage provided to an additional "insured" will not be broader than coverage provided to any other "insured" under this Coverage Part.

ALL OTHER TERMS, CONDITIONS, AND EXCLUSIONS REMAIN UNCHANGED.

 Includes copyrighted material of ISO Insurance Services Office, Inc., with its permission

(3) When this insurance is excess over other insurance, we will pay only our share of the amount of the loss, if any, that exceeds the sum of:

(a) The total amount that all such other insurance would pay for the loss in the absence of this insurance; and

(b) The total of all deductible and self-insured amounts under all that other insurance.

(4) We will share the remaining loss, if any, with any other insurance that is not described in this Excess Insurance provision and was not bought specifically to apply in excess of the Limits of Insurance shown in the Declarations of this Coverage Part.

c. **Method Of Sharing**

If all of the other insurance permits contribution by equal shares, we will follow this method also. Under this approach each insurer contributes equal amounts until it has paid its applicable limit of insurance or none of the loss remains, whichever comes first.

If any of the other insurance does not permit contribution by equal shares, we will contribute by limits. Under this method, each insurer's share is based on the ratio of its applicable limit of insurance to the total applicable limits of insurance of all insurers.

5. **Premium Audit**

a. We will compute all premiums for this Coverage Part in accordance with our rules and rates.

b. Premium shown in this Coverage Part as advance premium is a deposit premium only. At the close of each audit period we will compute the earned premium for that period and send notice to the first Named Insured. The due date for audit and retrospective premiums is the date shown as the due date on the bill. If the sum of the advance and audit premiums paid for the policy period is greater than the earned premium, we will return the excess to the first Named Insured.

c. The first Named Insured must keep records of the information we need for premium computation, and send us copies at such times as we may request.

6. **Representations**

By accepting this policy, you agree:

a. The statements in the Declarations are accurate and complete;

b. Those statements are based upon representations you made to us; and

c. We have issued this policy in reliance upon your representations.

7. **Separation Of Insureds**

Except with respect to the Limits of Insurance, and any rights or duties specifically assigned in this Coverage Part to the first Named Insured, this insurance applies:

a. As if each Named Insured were the only Named Insured; and

b. Separately to each insured against whom claim is made or "suit" is brought.

8. **Transfer Of Rights Of Recovery Against Others To Us**

If the insured has rights to recover all or part of any payment we have made under this Coverage Part, those rights are transferred to us. The insured must do nothing after loss to impair them. At our request, the insured will bring "suit" or transfer those rights to us and help us enforce them.

9. **When We Do Not Renew**

If we decide not to renew this Coverage Part, we will mail or deliver to the first Named Insured shown in the Declarations written notice of the nonrenewal not less than 30 days before the expiration date.

If notice is mailed, proof of mailing will be sufficient proof of notice.

SECTION V – DEFINITIONS

1. "Advertisement" means a notice that is broadcast or published to the general public or specific market segments about your goods, products or services for the purpose of attracting customers or supporters. For the purposes of this definition:

a. Notices that are published include material placed on the Internet or on similar electronic means of communication; and

b. Regarding web-sites, only that part of a web-site that is about your goods, products or services for the purposes of attracting customers or supporters is considered an advertisement.

2. "Auto" means:

a. A land motor vehicle, trailer or semitrailer designed for travel on public roads, including any attached machinery or equipment; or

b. Any other land vehicle that is subject to a compulsory or financial responsibility law or other motor vehicle insurance law in the state where it is licensed or principally garaged.

However, "auto" does not include "mobile equipment".

© ISO Properties, Inc., 2006

2. Any other land vehicle that is subject to a compulsory or financial responsibility law or other motor vehicle insurance law where it is licensed or principally garaged.

However, "auto" does not include "mobile equipment".

C. "Bodily injury" means bodily injury, sickness or disease sustained by a person including death resulting from any of these.

D. "Covered pollution cost or expense" means any cost or expense arising out of:

1. Any request, demand, order or statutory or regulatory requirement that any "insured" or others test for, monitor, clean up, remove, contain, treat, detoxify or neutralize, or in any way respond to, or assess the effects of "pollutants"; or
2. Any claim or "suit" by or on behalf of a governmental authority for damages because of testing for, monitoring, cleaning up, removing, containing, treating, detoxifying or neutralizing, or in any way responding to or assessing the effects of "pollutants".

"Covered pollution cost or expense" does not include any cost or expense arising out of the actual, alleged or threatened discharge, dispersal, seepage, migration, release or escape of "pollutants":

a. That are, or that are contained in any property that is:
   (1) Being transported or towed by, handled, or handled for movement into, onto or from the covered "auto";
   (2) Otherwise in the course of transit by or on behalf of the "insured";
   (3) Being stored, disposed of, treated or processed in or upon the covered "auto";
b. Before the "pollutants" or any property in which the "pollutants" are contained are moved from the place where they are accepted by the "insured" for movement into or onto the covered "auto"; or
c. After the "pollutants" or any property in which the "pollutants" are contained are moved from the covered "auto" to the place where they are finally delivered, disposed of or abandoned by the "insured".

Paragraph **a.** above does not apply to fuels, lubricants, fluids, exhaust gases or other similar "pollutants" that are needed for or result from the normal electrical, hydraulic or mechanical functioning of the covered "auto" or its parts, if:

(1) The "pollutants" escape, seep, migrate, or are discharged, dispersed or released directly from an "auto" part designed by its manufacturer to hold, store, receive or dispose of such "pollutants"; and
(2) The "bodily injury", "property damage" or "covered pollution cost or expense" does not arise out of the operation of any equipment listed in Paragraph **6.b.** or **6.c.** of the definition of "mobile equipment".

Paragraphs **b.** and **c.** above do not apply to "accidents" that occur away from premises owned by or rented to an "insured" with respect to "pollutants" not in or upon a covered "auto" if:

(1) The "pollutants" or any property in which the "pollutants" are contained are upset, overturned or damaged as a result of the maintenance or use of a covered "auto"; and
(2) The discharge, dispersal, seepage, migration, release or escape of the "pollutants" is caused directly by such upset, overturn or damage.

E. "Diminution in value" means the actual or perceived loss in market value or resale value which results from a direct and accidental "loss".

F. "Employee" includes a "leased worker". "Employee" does not include a "temporary worker".

G. "Insured" means any person or organization qualifying as an insured in the Who Is An Insured provision of the applicable coverage. Except with respect to the Limit of Insurance, the coverage afforded applies separately to each insured who is seeking coverage or against whom a claim or "suit" is brought.

H. "Insured contract" means:

1. A lease of premises;
2. A sidetrack agreement;
3. Any easement or license agreement, except in connection with construction or demolition operations on or within 50 feet of a railroad;

© ISO Properties, Inc., 2005

TRAVELERS

ONE TOWER SQUARE
HARTFORD, CT 06183

WORKERS COMPENSATION
AND
EMPLOYERS LIABILITY POLICY
ENDORSEMENT WC 99 06 11 (A)

POLICY NUMBER: (PJUB-8464L16-2-13)

NOTICE OF CANCELLATION

Except for non-payment of premium by you, we agree that no cancellation or limitation of this policy shall become effective until the number of day's written notice specified in item 2 of the Schedule has been mailed to you and to the person or organization designated in item 1 of the Schedule at the address indicated.

SCHEDULE

1. Name: ANY PERSON OR ORGANIZATION TO WHOM YOU HAVE AGREED IN A WRITTEN CONTRACT THAT NOTICE OF CANCELLATION OR MATERIAL LIMITATION OF THIS POLICY WILL BE GIVEN, BUT ONLY IF;
   1. YOU SEND US A WRITTEN REQUEST TO PROVIDE SUCH NOTICE, INCLUDING THE NAME AND ADDRESS OF SUCH PERSON OR ORGANIZATION, AFTER THE FIRST NAMED INSURED RECEIVES NOTICE FROM US OF THE CANCELLATION OR MATERIAL LIMITATION OF THIS POLICY; AND
   2. WE RECEIVE SUCH WRITTEN REQUEST AT LEAST 14 DAYS BEFORE THE BEGINNING OF THE APPLICABLE NUMBER OF DAYS SHOWN IN THIS SCHEDULE.

   Address: THE ADDRESS FOR THAT PERSON OR ORGANIZATION INCLUDED IN SUCH WRITTEN REQUEST FROM YOU TO US.

2. Number of Days Written Notice: 30 Additional Days

This endorsement changes the policy to which it is attached and is effective on the date issued unless otherwise stated.

(The information below is required only when this endorsement is issued subsequent to preparation of the policy.)

Endorsement Effective Policy No. Endorsement No.

Insured Premium $

Insurance Company Countersigned by _____

DATE OF ISSUE: 12-23-13 ST ASSIGN: