Meeting Date: **7/15/2014**

Report Type: Consent

Report ID: 2014-00256

City of SACRAMENTO **09**

City Council Report
915 I Street, 1st Floor
www.CityofSacramento.org

Title: Contract: 28th Street Landfill Flare Replacement Project (Y13000100)

Location: District 3

Recommendation: 1) Pass a Resolution a) establishing the 28th Street Landfill Flare Replacement capital improvement project (Y13000100); b) appropriating $619,897 from the Solid Waste Fund (Fund 6007) to the project; and c) establishing an expenditure budget in the amount of $619,897 for the project (Solid Waste Fund, Fund 6007); and 2) pass a Motion a) approving the construction plans and specifications; b) awarding a construction contract to Blue Flame Crew West, LLC., the lowest responsive and responsible bidder, for the 28th Street Landfill Flare Replacement Project in the amount of $619,896.14; and c) authorizing the City Manager or the City Manager's designee to execute the contract specified above.

Contact: Steve Harriman, Integrated Waste General Manager, (916) 808-4949, Department of General Services

Presenter: None

Department: General Services

Division: Landfill Operations

Dept ID: 13001771

Attachments:

1-Description/Analysis

2-Resolution

3-Contract

City Attorney Review

Approved as to Form
Lan Wang
7/8/2014 10:27:56 AM

Approvals/Acknowledgements

Department Director or Designee: Reina Schwartz - 6/27/2014 8:55:31 AM

Back to Report Table of Contents

Description/Analysis

Issue Detail: In order to comply with regulations promulgated by the California Air Resources Board (CARB), the methane gas generated by the buried waste at the 28th Street Landfill must be continuously burned using two flare stations that are part of the landfill gas collection system. On December 4, 2013, a fire destroyed one of the flare stations, thus eliminating the system redundancy that ensures continual operation. The remaining operational flare station is oversized for the declining quality and quantity of landfill gas generated at the site. The result is the flare sometimes shuts down, which may violate conditions of the City's landfill closure permit and prompt regulatory action.

Policy Considerations: The recommendations in this report are in accordance with City Code Chapter 3.60 regarding contracts for public projects.

Economic Impacts: The recommended contract is expected to create 2.5 jobs (1.4 direct jobs and 1.1 jobs through indirect and induced activities) and create $382,745 in total economic output ($241,247 of direct output and another $141,498 of output in indirect and induced activities).

The indicated economic impacts are estimates calculated using a calculation tool developed by the Center for Strategic Economic Research (CSER). CSER utilized the IMPLAN input-output model (2009 coefficients) to quantify the economic impacts of a hypothetical $1 million of spending in various construction categories within the City of Sacramento in an average one-year period. Actual impacts could differ significantly from the estimates and neither the City of Sacramento nor CSER shall be held responsible for consequences resulting from such differences.

Environmental Considerations:

> **California Environmental Quality Act (CEQA):** No environmental review is necessary because this report involves the restoration or rehabilitation of deteriorated or damaged structures, facilities, or mechanical equipment to meet current standards of public health and safety, and staff has confirmed that the damage did not result from an environmental hazard such as earthquake, landslide, or flood, in accordance with Section 15301(d) of the CEQA Guidelines.
>
> **Sustainability:** Replacing the damaged flare station will support the Sustainability Master Plan by ensuring the reduction of greenhouse gas production by methane gas generated at the 28th Street Landfill.

Commission/Committee Action: None

Rationale for Recommendation: The construction of a new flare station to replace the fire-damaged flare station will ensure the continual burning of methane gas in compliance with clean air regulations set by CARB and the Sacramento Metropolitan Air Quality Management District.

In accordance with City Code Chapter 3.60, the Recycling and Solid Waste Division issued Invitation for Bid (IFB) No. 14131771001 on May 8, 2014 for the 28th Street Landfill Flare Replacement Project. The engineer's estimate for this project was $650,000. Bids closed on June 4, 2014 and four bids were received. Blue Flame Crew West, LLC. was determined to be the lowest responsive and responsible bidder.

A summary of the bid results is provided in the following table:

Contractor	Bid Amount	LBE Participation
Blue Flame Crew West, LLC.	$619,896.14	11%
AECOM Technical Services, Inc.	$642,717.77	100%
CB&I Environmental and Infrastructure, Inc.	$690,262.00	100%
R.J. Gordon Construction, Inc.	$831,746.00	6%

Financial Considerations: This report recommends awarding a construction contract in the amount of $619,896.14 for the 28th Street Landfill Flare Replacement project. Sufficient funding exists in the FY2014/15 Department of General Services, Recycling and Solid Waste Division contingency budget (Solid Waste Fund, Fund 6007) for the recommended budget appropriation to the project.

Local Business Enterprise (LBE): Blue Flame Crew West, LLC. has satisfied the LBE requirements.

Back to Report Table of Contents

RESOLUTION NO. 2014-

Adopted by the Sacramento City Council

July 15, 2014

ESTABLISHING A CAPITAL IMPROVEMENT PROJECT AND APPROPRIATING FUNDS FOR THE 28TH STREET LANDFILL FLARE REPLACEMENT PROJECT (Y13000100)

BACKGROUND

A. To comply with clean air regulations, the methane gas generated by the buried waste at the 28th Street landfill must be continuously burned using two flare stations that are part of the landfill gas collection system.

B. On December 4, 2013, a fire permanently damaged one of the flare stations, thus eliminating the system redundancy that ensures continual operation.

C. The remaining operational flare station is oversized for the declining quality and quantity of landfill gas generated at the site and is prone to periodic shut downs, which may violate conditions of the City's landfill closure permit and may prompt regulatory action.

D. The construction of a new flare station to replace the fire-damaged flare station will ensure the continual burning of methane gas in compliance with clean air regulations set by the California Air Resources Board and the Sacramento Metropolitan Air Quality Management District.

BASED ON THE FACTS SET FORTH IN THE BACKGROUND, THE CITY COUNCIL RESOLVES AS FOLLOWS:

1. The 28th Street Landfill Flare Replacement Project capital improvement project (Y13000100) is established.

2. Appropriating $619,897 from the Solid Waste Fund (Fund 6007) to the 28th Street Landfill Flare Replacement Project (Y13000100) is approved.

3. An expenditure budget in the amount of $619,897 (Solid Waste Fund, Fund 6007) is established for the 28th Street Landfill Flare Replacement Project (Y13000100).

Back to Report Table of Contents

AGREEMENT

(Construction Contract Over $25,000)

THIS AGREEMENT, dated for identification _____, 20___, is made and entered into between the CITY OF SACRAMENTO, a municipal corporation ("City"), and Blue Flame Crew West, LLC ("Contractor").

The City and Contractor hereby mutually agree as follows:

1. CONTRACT DOCUMENTS

The Contract Documents, sometimes also referred to as the "Contract," consist of the following items, which are hereby incorporated by reference as if set forth in full in this Agreement:

- The Notice to Contractors
- The Proposal Form submitted by the Contractor
- The Instructions to Bidders and Contract Specifications for the 28th Street Landfill Flare Replacement, Invitation to Bid B14131771001
- The Local Business Enterprise (LBE) Requirements
- The Requirements for the Non-Discrimination in Employee Benefits by City Contractors Ordinance and the Declaration of Compliance
- The City's Reference Guide for Construction Contracts
- The Addenda, if any
- This Agreement
- The Standard Specifications
- The Special Provisions
- The Plans and Technical Specifications
- The drawings and other data and all developments thereof prepared by City pursuant to the Contract
- Any modifications of any of the foregoing made or approved by City, including but not limited to duly authorized change orders.

Unless specifically noted otherwise, references to the "Standard Specifications" shall mean and refer to the Standard Specifications for Public Construction of the City of Sacramento approved by the Sacramento City Council on June 4, 2007 (Resolution No. 2007-350), and any subsequent amendments thereto approved by the Sacramento City Council or the Sacramento City Manager. Work called for in any one Contract Document and not mentioned in another is to be performed and executed as if mentioned in all Contract Documents. The table of contents, titles and headings contained in the Contract Documents are provided solely to facilitate reference to various provisions of the Contract Documents and in no way affect or limit the interpretation of the provisions to which they refer.

2. DEFINITIONS

Unless otherwise specifically provided herein, all words and phrases defined in the Standard Specifications shall have the same meaning and intent in this Agreement.

3. AGREEMENT CONTROLS

In the event of a conflict between any of the terms and conditions set forth in this Agreement and the terms and conditions set forth in other Contract Documents, the terms and conditions set forth in this Agreement shall prevail, except that the provisions of any duly authorized change order shall prevail over any conflicting provisions of this Agreement.

4. SCOPE OF CONTRACT

Contractor agrees to furnish all tools, equipment, apparatus, facilities, labor, material and transportation necessary to perform and complete in a good and workmanlike manner to the satisfaction of City, all the Work called for in the Contract Documents entitled:

28th Street Landfill Flare Replacement
Invitation to Bid B14131771001

Contractor agrees to perform such Work in the manner designated in and in strict conformity with the Contract Documents.

5. CONTRACT AMOUNT AND PAYMENTS

City agrees to pay and Contractor agrees to accept, as complete payment for the above Work, in accordance with the schedule and procedures set forth in the Contract Documents and subject to deductions, withholdings and additions as specified in the Contract Documents, a total sum that shall not exceed the total bid amount set forth in Contractor's Proposal Form. In addition, subject to deductions, withholdings and additions as specified in the Contract Documents, payment for individual items of the Work shall be computed as follows:

(A) For items of the Work for which a lump sum price is specified in Contractor's Proposal Form, Contractor shall be paid the lump sum price(s) specified in Contractor's Proposal Form; and

(B) For items of the Work for which a unit price is specified in Contractor's Proposal Form, Contractor shall be paid the sum computed at such unit price, or computed at a different price if such different price is determined by City in accordance with the Standard Specifications, based on the actual amount of each such item performed and/or furnished and incorporated in the Work; provided that in no event shall the total sum for a unit price item exceed the total bid amount set forth for such item in the Contractor's Proposal Form, unless authorized by Change Order.

6. PROGRESS PAYMENTS

Subject to the terms and conditions of the Contract, City shall cause payments to be made upon demand of Contractor as follows:

(A) On or about the first of the month, the Engineer shall present to the Contractor a statement showing the amount of labor and materials incorporated in the Work through the twentieth (20) calendar day of the preceding month. After

both Contractor and Engineer approve the statement in writing, and the City's labor compliance officer provides written approval, the City shall issue a certificate for ninety-five (95) percent of the amount it shall find to be due, subject to any deductions or withholdings authorized or required under the Contract or any applicable Laws or Regulations.

(B) No inaccuracy or error in said monthly estimates shall operate to release Contractor from damages arising from such Work or from enforcement of each and every provision of the Contract Documents, and City shall have the right subsequently to correct any error made in any estimate for payment.

(C) Contractor shall not be paid for any defective or improper Work.

(D) The remaining five (5) percent of the value of the Work performed under the Contract, if unencumbered and subject to any deductions or withholdings authorized or required under the Contract or any applicable Laws or Regulations, shall be released not later than sixty (60) days after completion and final acceptance of the Work by City. Acceptance by Contractor of the final payment shall constitute a waiver of all claims against the City arising under the Contract Documents, except for disputed claims in stated amounts that the Contractor specifically reserves in writing, but only to the extent that the Contractor has complied with all procedures and requirements applicable to the presentation and processing of such claim(s) under the Contract Documents. Contractor shall be entitled to substitute securities for retention or to direct that payments of retention be made into escrow, as provided in Public Contract Code Section 22300, upon execution of the City's Escrow Agreement for Security Deposits in Lieu of Retention.

(E) The parties agree that, for purposes of the timely progress payment requirements specified in Public Contract Code Section 20104.50, the date that the City receives a statement jointly approved by the Contractor and the Engineer as provided above shall be deemed to constitute the date that City receives an undisputed and properly submitted payment request from the Contractor. Progress payments not made within 30 days after this date may be subject to payment of interest as provided in Public Contract Code Section 20104.50.

7. RETENTION OF SUMS CHARGED AGAINST CONTRACTOR

When, under the provisions of this Contract or any applicable Laws or Regulations, City is authorized or required to withhold, deduct or charge any sum of money against Contractor, City may deduct and retain the amount of such charge from the amount of the next succeeding progress estimate(s), or from any other moneys due or that may become due Contractor from City. If, on completion or termination of the Contract, sums due Contractor are insufficient to pay City's charges, City shall have the right to recover the balance from Contractor or its Sureties.

8. COMMENCEMENT AND PROSECUTION OF WORK

Contractor shall commence the Work not later than fifteen (15) working days after the date of the written Notice to Proceed from City to Contractor and shall diligently prosecute the Work to final completion. The phase "commence the Work" means to engage in a continuous program on-site including, but not limited to, site clearance, grading, dredging, land filling and the fabrications, erection, or installation of the Work. The Notice to Proceed shall be issued within fifteen (15) calendar days following execution of the Agreement by the City and the filing by Contractor of the required Bonds and proof of insurance, provided that the Engineer may delay issuance of the Notice to Proceed if the Engineer determines in the Engineer's sole discretion that conditions on the site of the Work are unsuitable for commencement of the Work. After the Notice to Proceed is issued, the continuous prosecution of Work by Contractor shall be subject only to Excusable Delays as defined in this Agreement.

9. TIME OF COMPLETION

The entire Work shall be brought to completion in the manner provided for in the Contract Documents on or before March 31, 2015, unless extensions of time are granted in accordance with the Contract Documents.

Failure to complete the entire Work by the Completion Date and in the manner provided for in the Contract Documents shall subject Contractor to liquidated damages as provided in this Agreement. Time is and shall be of the essence in the performance of the Contract and the Work.

10. PAYMENTS DO NOT IMPLY ACCEPTANCE OF WORK

The payment of any progress payment, or the acceptance thereof by Contractor, shall not constitute acceptance of the Work or any portion thereof and shall in no way reduce the liability of Contractor to replace unsatisfactory work or material, whether or not the unsatisfactory character of such work or material was apparent or detected at the time such payment was made.

11. ACCEPTANCE NOT RELEASE

Contractor shall correct immediately any defective or imperfect work or materials that may be discovered before final acceptance of the entire Work, whether or not such defect or imperfection was previously noticed or identified by the City. The inspection of the Work, or any part thereof, shall not relieve Contractor of any of its obligations to perform satisfactory work as herein specified.

Failure or neglect on the part of City or any of its officers, employees or authorized agents to discover, identify, condemn or reject defective or imperfect work or materials shall not be construed to imply an acceptance of such work or materials, if such defect or imperfection becomes evident at any time prior to final acceptance of the entire Work, nor shall such failure or neglect be construed as barring City from enforcing Contractor's warranty(ies) or otherwise recovering damages or such a sum of money as may be required to repair or rebuild the defective or imperfect work or

materials whenever City may discover the same, subject only to any statutes of limitation that may apply to any such claim.

12. CITY'S RIGHT TO TAKE POSSESSION OF THE WORK IN WHOLE OR IN PART

The City shall have the right at any time to enter upon the Work and perform work not covered by this Contract, or to occupy and use a portion of the Work, prior to the date of the final acceptance of the Work as a whole, without in any way relieving Contractor of any obligations under this Contract.

13. NO WAIVER OF REMEDIES

Neither the inspection by City, its officers, employees or agents, nor any certificate or other approval for the payment of money, nor any payment for, nor acceptance of the whole or any part of the Work by City, nor any extensions of time, nor any position taken by City, its officers, employees or its agents shall operate as a waiver of any provision of the Contract Documents nor of any power herein reserved to City or any right to damages herein provided, nor shall any waiver of any breach of this Agreement be held to be a waiver of any other or subsequent breach. All remedies provided in the Contract Documents shall be taken and construed as cumulative; in addition to each and every other remedy herein provided, the City shall have any and all equitable and legal remedies that it would in any case have.

14. WARRANTY

Except as otherwise expressly provided in the Contract Documents, and excepting only items of routine maintenance, ordinary wear and tear and unusual abuse or neglect by City, Contractor warrants and guarantees all Work executed and all supplies, materials and devices of whatsoever nature incorporated in or attached to the Work, or otherwise provided as a part of the Work pursuant to the Contract, to be absolutely free of all defects of workmanship and materials for a period of one year after final acceptance of the entire Work by the City. Contractor shall repair or replace all work or material, together with any other work or material that may be displaced or damaged in so doing, that may prove defective in workmanship or material within this one year warranty period without expense or charge of any nature whatsoever to City.

In the event that Contractor shall fail to comply with the conditions of the foregoing warranty within ten (10) days after being notified of the defect in writing, City shall have the right, but shall not be obligated, to repair, or obtain the repair of, the defect and Contractor shall pay to City on demand all costs and expense of such repair. Notwithstanding anything herein to the contrary, in the event that any defect in workmanship or material covered by the foregoing warranty results in a condition that constitutes an immediate hazard to public health or safety, or any property interest, or any person, City shall have the right to immediately repair, or cause to be repaired, such defect, and Contractor shall pay to City on demand all costs and expense of such repair. The foregoing statement relating to hazards to health,

safety or property shall be deemed to include both temporary and permanent repairs that may be required as determined in the sole discretion and judgment of City.

In addition to the above, the Contractor shall make a written assignment of all manufacturer's and other product warranties to the City, prior to completion and final acceptance of the Work by City.

The Contractor's Performance Bond shall secure the performance of the Contractor's obligations under this Section 14, and the Contractor and its Surety shall be jointly and severally liable for these obligations.

15. LIQUIDATED DAMAGES IF WORK NOT COMPLETED ON TIME

(A) The actual fact of the occurrence of damages and the actual amount of the damages that City would suffer if the entire Work, and/or any specified portion thereof, were not completed within the time(s) specified herein are dependent upon many circumstances and conditions that could prevail in various combinations, and for this reason, it is impracticable and extremely difficult to fix the actual damages. Damages that City would suffer in the event of such delay include: loss of the use of the project; expenses of prolonged assignment to the project of an architectural and/or engineering staff; prolonged costs of administration, inspection, and supervision; increased operational expenses and/or impaired operation of other facilities dependent upon completion of the project; and the loss and inconvenience suffered by the public within the City of Sacramento by reason of the delay in the completion of the project or portion thereof. Accordingly, the parties agree, and by execution of this Agreement, Contractor acknowledges that it understands and agrees, that the amount(s) set forth herein as liquidated damages reflect the parties' best efforts at the time of entering into the Contract to estimate the damages that may be incurred by City and the public due to the Contractor's delay in completion of the Work and/or any specified portion thereof, and shall be presumed to be the amount of damages sustained by the failure of Contractor to complete the entire Work and/or any specified portion thereof within the time(s) specified herein.

(B) Contractor shall pay liquidated damages to City for failure to complete the entire Work by the Completion Date (as extended in accordance with the Contract Documents, if applicable) in the amount of $1,000.00 for each calendar day after the Completion Date (as extended in accordance with the Contract Documents, if applicable), continuing to the time at which the entire Work is completed. Such amount is the actual cash value agreed upon by the City and Contractor as the loss to City and the public resulting from Contractor's default.

The parties agree, and by execution of this Agreement, Contractor acknowledges that it understands and agrees, that the foregoing provisions provide for the imposition of liquidated damages from the Completion Date (as extended in accordance with the Contract Documents, if applicable) until the date of completion of the entire Work as determined by the Engineer in accordance with Section 8-4 of the Standard Specifications, whether or not the Work or any

portion thereof is claimed or determined to be substantially complete prior to such date of completion.

(C) In the event Contractor shall become liable for liquidated damages, City, in addition to all other remedies provided by law, shall have the right to withhold any and all payments that otherwise would be or become due Contractor until the liability of Contractor under this section is finally determined. City shall have the right to use and apply such payments, in whole or in part, to reimburse City for all liquidated damages due or to become due to City. Any remaining balance of such payments shall be paid to Contractor only after discharge in full of all liability incurred by Contractor under this section or otherwise under any provision of the Contract Documents or any applicable Law or Regulation. If the sum so retained by City is not sufficient to discharge all such liabilities of Contractor, Contractor shall continue to remain liable to City until all such liabilities are satisfied in full. No failure by City to withhold any payment as specified above shall in any manner be construed to constitute a release of any such liabilities nor a waiver of the City's right to withhold payment for such liabilities.

16. INDEMNITY AND HOLD HARMLESS

(A) Contractor shall defend, hold harmless and indemnify the City, its officers, employees, and agents, and each and every one of them, from and against any and all actions, damages, costs, liabilities, claims, demands, losses, judgments, penalties, costs and expenses of every type and description, whether arising on or off the site of the Work, including, but not limited to, any fees and/or costs reasonably incurred by City's staff attorneys or outside attorneys and any fees and expenses incurred in enforcing this provision (hereafter collectively referred to as "Liabilities"), including but not limited to Liabilities arising from personal injury or death, damage to personal, real or intellectual property or the environment, contractual or other economic damages, or regulatory penalties, arising out of or in any way connected with performance of or failure to perform the Work by the Contractor, any subcontractor or agent, anyone directly or indirectly employed by any of them or anyone for whose acts any of them may be liable, whether or not (i) such Liabilities are caused in part by a party indemnified hereunder, or (ii) such Liabilities are litigated, settled or reduced to judgment; provided that the foregoing indemnity does not apply to liability for damages for death or bodily injury to persons, injury to property, or other loss, damage or expense to the extent arising from (i) the sole negligence or willful misconduct of, or defects in design furnished by, City, its agents, servants, or independent contractors who are directly responsible to City, or (ii) the active negligence of City.

(B) The existence or acceptance by City of any of the insurance policies or coverages described in this Agreement shall not affect or limit any of City's rights under this Section 16, nor shall the limits of such insurance limit the liability of Contractor hereunder. The provisions of this Section 16 shall survive any expiration or termination of the Contract.

17. CONTRACTOR SHALL ASSUME RISKS

Until the completion and final acceptance by City of all Work under this Contract, the Work shall be under Contractor's responsible care and charge, and Contractor, at no cost to City, shall rebuild, repair, restore and make good all injuries, damages, re-erections, and repairs occasioned or rendered necessary by accidental causes of any nature, to all or any portions of the Work.

18. GENERAL LIABILITY OF CONTRACTOR

Except as otherwise herein expressly stipulated, Contractor shall perform all the Work and furnish all the labor, materials, tools, equipment, apparatus, facilities, transportation, power and light, and appliances, necessary or proper for performing and completing the Work herein required in the manner and within the time herein specified. The mention of any specific duty or liability of Contractor shall not be construed as a limitation or restriction of any general liability or duty of Contractor, and any reference to any specific duty or liability shall be construed to be solely for the purpose of explanation.

19. INSURANCE

During the entire term of this Contract and until completion and final acceptance of the Work as provided in the Contract Documents, Contractor shall maintain in full force and effect the insurance coverage described in this section.

Full compensation for all premiums that Contractor is required to pay for the insurance coverage described herein shall be included in the compensation specified for performance of the Work under the Contract. No additional compensation will be provided for Contractor's insurance premiums.

It is understood and agreed by the Contractor that its liability to the City shall not in any way be limited to or affected by the amount of insurance coverage required of or carried by the Contractor.

(A) Minimum Scope and Limits of Insurance Coverage

(1) Commercial General Liability Insurance, providing coverage at least as broad as ISO CGL Form 00 01 on an occurrence basis for bodily injury, including death, of one or more persons, property damage and personal injury, with limits of not less than one million dollars ($1,000,000) per occurrence. The policy shall provide contractual liability and products and completed operations coverage for the term of the policy.

(2) Automobile Liability Insurance providing coverage at least as broad as ISO Form CA 00 01 on an occurrence basis for bodily injury, including death, of one or more persons, property damage and personal injury, with limits of not less than one million dollars ($1,000,000) per occurrence. The policy shall provide coverage for owned, non-owned and/or hired autos as appropriate to the operations of the Contractor.

(3) Workers' Compensation Insurance with statutory limits, and Employers' Liability Insurance with limits of not less than one million dollars ($1,000,000). The Worker's Compensation policy shall include a waiver of subrogation.

(B) Additional Insured Coverage

(1) Commercial General Liability Insurance: The City, its officials, employees and volunteers shall be covered by policy terms or endorsement as additional insureds as respects general liability arising out of activities performed by or on behalf of Contractor, products and completed operations of Contractor, and premises owned, leased or used by Contractor. The general liability additional insured endorsement must be signed by an authorized representative of the insurance carrier.

If the policy includes a blanket additional insured endorsement or contractual additional insured coverage, the above signature requirement may be fulfilled by submitting that document with a signed declaration page referencing the blanket endorsement or policy form.

(2) Automobile Liability Insurance: The City, its officials, employees and volunteers shall be covered by policy terms or endorsement as additional insureds as respects auto liability.

(C) Other Insurance Provisions

The policies are to contain, or be endorsed to contain, the following provisions:

(1) Contractor's insurance coverage shall be primary insurance as respects City, its officials, employees and volunteers. Any insurance or self-insurance maintained by City, its officials, employees or volunteers shall be in excess of Contractor's insurance and shall not contribute with it.

(2) Any failure to comply with reporting provisions of the policies shall not affect coverage provided to City, its officials, employees or volunteers.

(3) Coverage shall state that Contractor's insurance shall apply separately to each insured against whom claim is made or suit is brought, except with respect to the limits of the insurer's liability.

(4) City will be provided with thirty (30) days written notice of cancellation or material change in the policy language or terms.

(D) Acceptability of Insurance

Insurance shall be placed with insurers with a Bests' rating of not less than A:V. Self-insured retentions, policy terms or other variations that do not comply with the requirements of this Section 19 must be declared to and approved by the City Risk Management Division in writing prior to execution of this Agreement.

(E) Verification of Coverage

(1) Contractor shall furnish City with certificates and required endorsements evidencing the insurance required. The certificates and endorsements shall be forwarded to the City representative designated by City. Copies of policies shall be delivered to the City on demand. Certificates of insurance shall be signed by an authorized representative of the insurance carrier.

(2) The City may withdraw its offer of contract or cancel the Contract if the certificates of insurance and endorsements required have not been provided prior to execution of this Agreement. The City may withhold payments to Contractor and/or cancel the Contract if the insurance is canceled or Contractor otherwise ceases to be insured as required herein.

(F) Subcontractors

Contractor shall require and verify that all subcontractors maintain insurance coverage that meets the minimum scope and limits of insurance coverage specified in subsection A, above.

20. FAILURE TO MAINTAIN BONDS OR INSURANCE

If, at any time during the performance of this Contract, Contractor fails to maintain any item of the bonds and/or insurance required under the Contract in full force and effect, Contractor shall immediately suspend all work under the Contract and notify City in writing of such failure. After such notice is provided, or if City discovers such failure and notifies Contractor, the City thereafter may withhold all Contract payments due or that become due until notice is received by City that such bonds and/or insurance have been restored in full force and effect and that the premiums therefor have been paid for a period satisfactory to the Division of Risk Management. Contractor shall not resume work until notified by City to do so, and the City shall have no responsibility or liability for any costs incurred by Contractor as a result of such suspension of Work.

In addition to the foregoing, any failure to maintain any item of the required bonds and/or insurance at any time during the performance of this Contract will be sufficient cause for termination of the Contract by City.

The Contractor shall be solely responsible for, and shall defend, indemnify and hold harmless the City, its officers, employees and agents against and from, any and all damages, claims, losses, actions, costs or other expenses of any kind incurred by any party as a direct or indirect result of any suspension of Work or termination of the Contract under the provisions of this Section.

21. EXCUSABLE DELAYS

For the purpose of these Contract Documents, the term "Excusable Delay" shall mean, and is limited to, delay caused directly by: acts of God; acts of a public enemy; fires; inclement weather as determined by the Engineer; riots; insurrections;

epidemics; quarantine restrictions; strikes; lockouts; sitdowns; acts of a governmental agency; priorities or privileges established for the manufacture, assemble, or allotment of materials necessary in the Work by order, decree or otherwise of the United States or by any department, bureau, commission, committee, agent, or administrator of any legally constituted public authority; changes in the Work ordered by City insofar as they necessarily require additional time in which to complete the Work; the prevention of Contractor from commencing or prosecuting the Work because of the acts of others, excepting Contractor's subcontractors or suppliers; or the prevention of Contractor from commencing or prosecuting the Work because of a Citywide failure of public utility service.

The term "Excusable Delay" shall specifically not include: (i) any delay that could have been avoided by the exercise of care, prudence, foresight and diligence on the part of Contractor; (ii) any delay in the prosecution of any part of the Work that does not constitute a Controlling Operation, whether or not such delay is unavoidable; (iii) any reasonable delay resulting from time required by City for review of any Contractor submittals and for the making of surveys, measurements and inspection; and, (iv) any delay arising from an interruption in the prosecution of the Work on account of reasonable interference by other Contractors employed by City that does not necessarily prevent the completion of the entire Work within the time specified. Excusable Delays, if any, shall operate only to extend the Completion Date (not in excess of the period of such delay as determined by City) and shall not under any circumstances increase the amount City is required to pay Contractor except as otherwise provided in these Contract Documents.

22. CONTRACTOR TO SERVE NOTICE OF DELAYS

Whenever Contractor foresees any delay in the prosecution of the Work, and in any event as soon as possible (not to exceed a period of ten (10) calendar days) after the initial occurrence of any delay that Contractor regards as or may later claim to be an Excusable Delay, the Contractor shall notify the Engineer in writing of such delay and its cause, in order that the Engineer: (i) may take immediate steps to prevent if possible the occurrence or continuance of the delay; or (ii) if this cannot be done, may determine whether the delay is to be considered excusable, how long it continues, and to what extent the prosecution and completion of the Work are delayed thereby. Said written notice shall constitute an application for an extension of time only if the notice requests such an extension and sets forth the Contractor's estimate of the additional time required together with a full description of the cause of the delay relied upon.

After the completion of any part or whole of the Work, the Engineer, in estimating the amount due Contractor, will assume that any and all delays that may have occurred in its prosecution and completion were not Excusable Delays, except for such delays for which the Contractor has provided timely written notice as required herein, and that the Engineer has found to be excusable. Contractor shall not be entitled to claim Excusable Delay for any delay for which the Contractor failed to provide such timely written notice.

23. EXTENSION OF TIME

If the Contractor complies with Section 22, above, and the Engineer finds a delay claimed by the Contractor to be an Excusable Delay, the Contractor shall be allowed an extension of time to complete the Work that is proportional to the period of Excusable Delay determined by the Engineer, subject to the approval by City of a change order granting such time extension. During a duly authorized extension for an Excusable Delay, City shall not charge liquidated damages against the Contractor for such delay.

If the City extends the time to complete the Work as provided herein, such extension shall in no way release any warranty or guarantee given by Contractor pursuant to the provisions of the Contract Documents, nor shall such extension of time relieve or release the sureties of the Bonds provided pursuant to the Contract Documents. By executing such Bonds, the Sureties shall be deemed to have expressly agreed to any such extension of time. The granting of any extension of time as provided herein shall in no way operate as a waiver on the part of City of its rights under this Contract, excepting only extension of the Completion Date for such period of Excusable Delay as may be determined by the Engineer and approved by a duly authorized change order.

24. NO PAYMENT FOR DELAYS

No damages or compensation of any kind shall be paid to Contractor or any subcontractor because of delays in the progress of the Work whether or not such delays qualify for extension of time under this Agreement; except that this provision shall not preclude the recovery of damages for a delay caused by the City that is unreasonable under the circumstances and that is not within the contemplation of the parties, provided that the Contractor timely submits all such written notice(s) and fully complies with such other procedures as may be specified in the Contract Documents or any Laws or Regulations for Contractor to claim damages for such delay.

25. CHANGES IN THE WORK

Changes in the Work authorized or directed in accordance with the Contract Documents and extensions of time of completion made necessary by reason thereof shall not in any way release any warranty or guarantee given by Contractor pursuant to the provisions of the Contract Documents, nor shall such changes in the Work relieve or release the Sureties on Bonds provided pursuant to the Contract Documents. By executing such Bonds, the Sureties shall be deemed to have expressly agreed to any such change in Work and to any extension of time made by reason thereof.

26. TERMINATION AFTER COMPLETION DATE

In addition to any other rights City may have, if any services or work required under the Contract (including but not limited to punch list items) are not completed as of

the Completion Date (as adjusted by any extensions of time for Excusable Delays granted pursuant to the Contract Documents), City may terminate the Contract at any time after the Completion Date (as adjusted by any extensions of time for Excusable Delays granted pursuant to the Contract Documents), by providing a written notice to Contractor specifying the date of termination. Such notice also may specify conditions or requirements that Contractor must meet to avoid termination of the Contract on such date. If Contractor fails to fulfill all such conditions and requirements by such termination date, or, if no such conditions or requirements are specified, Contractor shall cease rendering services and performing work on such termination date, and shall not be entitled to receive any compensation for services rendered or work performed after such termination date. In the event of such termination, Contractor shall remain liable to City for liquidated damages incurred for any period of time prior to the termination date.

In addition to any other charges, withholdings or deductions authorized under the Contract or any Laws or Regulations, if City terminates the Contract pursuant to this section, City may withhold and deduct from any payment and/or retention funds otherwise due Contractor any sum necessary to pay the City's cost of completing or correcting, or contracting for the completion or correction of, any services or work under the Contract that are not completed to the satisfaction of the City or that otherwise are deficient or require correction as of such termination date, including but not limited to incomplete punch list items. Such costs shall include all of the City's direct and indirect costs incurred to complete or correct such services or work, including the City's administrative and overhead costs. If the amount of payment(s) and/or retention funds otherwise due the Contractor are insufficient to pay such costs, City shall have the right to recover the balance of such costs from the Contractor and/or its Surety(ies).

27. TERMINATION FOR CONVENIENCE

Upon written notice to the Contractor, the City may at any time, without cause and without prejudice to any other right or remedy of the City, elect to terminate the Contract for the convenience of City. In such case, the Contractor shall be paid (without duplication of any items, and after deduction and/or withholding of any amounts authorized to be deducted or withheld by the Contract Documents or any Laws or Regulations):

(A) For Work executed in accordance with the Contract Documents prior to the effective date of termination and determined to be acceptable by the Engineer, including fair and reasonable sums for overhead and profit on such Work;

(B) For reasonable claims, costs, losses, and damages incurred in settlement of terminated contracts with subcontractors, suppliers, and others; and

(C) For reasonable expenses directly attributable to termination.

Contractor shall not be paid for any loss of anticipated profits or revenue for any Work not performed prior to termination, nor for any economic loss arising out of or resulting from such termination, except for the payments listed in this section. Contractor's warranty under Section 14 of this Agreement shall apply, and Contractor

shall remain responsible for all obligations related to such warranty, with respect to all portions of the Work performed prior to the effective date of the termination for convenience pursuant to this section. The City shall be entitled to have any or all remaining Work performed by other contractors or by any other means at any time after the effective date of a termination for convenience pursuant to this section.

28. TERMINATION FOR BREACH OF CONTRACT

If Contractor abandons the Work under this Contract, or if the Contract or any portion of the Contract is sublet or assigned without the consent of the City, or if the Engineer determines in the Engineer's sole discretion that the conditions of the Contract in respect to the rate of progress of the Work are not being fulfilled or any part thereof is unnecessarily delayed, or if Contractor violates or breaches, or fails to execute in good faith, any of the terms or conditions of the Contract, or if Contractor refuses or fails to supply enough properly skilled labor or materials or refuses or fails to make prompt payment to subcontractors for material or labor, or if Contractor disregards any Laws or Regulations or proper instruction or orders of the Engineer, then, notwithstanding any provision to the contrary herein, the City may give Contractor and its Sureties written notification to immediately correct the situation or the Contract shall be terminated.

In the event that such notice is given, and, in the event such situation is not corrected, or arrangements for correction satisfactory to the City are not made, within ten (10) calendar days from the date of such notice or within such other period of time as may be specified by the City in the notice, the Contract shall upon the expiration of said period cease and terminate. In the event of any such termination, City may take over the Work and prosecute the Work to completion, or otherwise, and the Contractor and its Sureties shall be liable to City for any cost occasioned City thereby, as hereinafter set forth.

In the event City completes the Work, or causes the Work to be completed, no payment of any kind shall be made to Contractor until the Work is complete. The cost of completing the Work, including but not limited to, extra costs of project administration and management incurred by City, both direct or indirect, shall be deducted from any sum then due, or that becomes due, to Contractor from City. If sums due to Contractor from City are less than the cost of completing the Work, Contractor and its Sureties shall pay City a sum equal to this difference on demand. In the event City completes the Work, and there is a sum remaining due to Contractor after City deducts the costs of completing the Work, then City shall pay such sum to Contractor. The Contractor and Contractor's Sureties shall be jointly and severally liable for all obligations imposed on Contractor hereunder.

No act by City before the Work is finally accepted, including, but not limited to, exercise of other rights under the Contract, actions at law or in equity, extensions of time, payments, assessments of liquidated damages, occupation or acceptance of any part of the Work, waiver of any prior breach of the Contract or failure to take action pursuant to this section upon the happening of any prior default or breach of Contractor, shall be construed to be a waiver or estoppel of the City's right to act

pursuant to this Section upon any subsequent event, occurrence or failure by Contractor to fulfill the terms and conditions of the Contract. The rights of City to terminate the Contract pursuant to this Section and pursuant to Sections 26 and 27 are cumulative and are in addition to all other rights of City pursuant to the Contract and at law or in equity.

29. CONTRACTOR BANKRUPT

If Contractor should commence any bankruptcy proceeding, or if Contractor is adjudged a bankrupt, or if Contractor makes any assignment for the benefit of creditors, or if a receiver is appointed on account of Contractor's insolvency, then the City may, without prejudice to any other right or remedy, terminate the Contract and complete the work by giving notice as provided in Section 28 above.

30. SURETIES' OBLIGATIONS UPON TERMINATION

If the City terminates the Contract pursuant to Section 28 or Section 29 above:

(A) The Surety under Contractor's performance bond shall be fully responsible for all of the Contractor's remaining obligations of performance under the Contract as if the Surety were a party to the Contract, including without limitation Contractor's obligations, as provided in the Contract Documents, to complete and provide a one-year warranty of the entire Work, pay liquidated damages and indemnify, defend and hold harmless City, up to the full amount of the performance bond.

(B) The Surety under Contractor's payment bond shall be fully responsible for the performance of all of the Contractor's remaining payment obligations for work, services, equipment or materials performed or provided in connection with the Work or any portion thereof, up to the full amount of the payment bond.

31. ACCOUNTING RECORDS OF CONTRACTOR

During performance of the Contract and for a period of three (3) years after completing the entire Work, Contractor shall maintain all accounting and financial records related to the Contract and performance of the Work in accordance with generally accepted accounting practices, and shall keep and make such records available for inspection and audit by representatives of the City upon reasonable written notice.

32. USE TAX REQUIREMENTS

During the performance of this Agreement, CONTRACTOR, for itself, its assignees and successors in interest, agrees as follows:

(A) Use Tax Direct Payment Permit: For all leases and purchases of materials, equipment, supplies, or other tangible personal property used to perform the Agreement and shipped from outside California, the Contractor and any subcontractors leasing or purchasing such materials, equipment, supplies or other tangible personal property shall obtain a Use Tax Direct Payment Permit from the California State Board of Equalization ("SBE") in accordance with the applicable SBE criteria and requirements.

(B) Sellers Permit: For any construction contract and any construction subcontract in the amount of $5,000,000 or more, Contractor and the subcontractor(s) shall obtain sellers permits from the SBE and shall register the jobsite as the place of business for the purpose of allocating local sales and use tax to the City. Contractor and its subcontractors shall remit the self-accrued use tax to the SBE, and shall provide a copy of each remittance to the City.

(C) The above provisions shall apply in all instances unless prohibited by the funding source for the Agreement.

IN WITNESS WHEREOF, the parties hereto have signed this Agreement on the date set for opposite their names.

CONTRACTOR
Under penalty of perjury, I certify that the taxpayer identification number and all other information provided here are correct.

DATE June 23, 2014

BY [signature]

Timothy A. Boos
Print Name

PRESIDENT
Title

BY _____

_____
Print Name

_____
Title

80-0959448
Federal ID#

201330910360
State ID#

1018330
City of Sacramento Business Operation Tax Certificate No. (City will not award contract until Certificate Number is obtained)

Type of Business Entity *(check one)*:
_____ Individual/Sole Proprietor
_____ Partnership
_____ Corporation
_X_ Limited Liability Company
_____ Other (*please specify:*_____)

CITY OF SACRAMENTO
a municipal corporation

DATE _____

BY _____

For: _____
City Manager

Original Approved As To Form:

[signature]
City Attorney

Attest:

_____
City Clerk

City of SACRAMENTO

BUSINESS TAX INQUIRY

915 I STREET, ROOM 1214
SACRAMENTO, CA 95814

We are pleased to provide you with the following information you requested.

Business Information

Account Number	1018330
Firm	BLUE FLAME CREW WEST, LLC
Street Address	2492 ACORN HILL CT
City, State, Zip	LISLE, IL 60532-3203
Business Phone	(312)560-2560
Business Description	LANDFILL MAINTENANCE SERVICE
Business Start Date	05/29/2014
Business Close Dt	
Period Expires	03/31/2015

Owner Information

Ownership Type

Owner Name(s):

BLUE FLAME CREW WEST, LLC

It must be emphasized that this information was provided by the applicant. We cannot guarantee the accuracy or content of this data.

Insurance Requirements Review

RE:	**JOB/Contract: City of Sacramento**
To:	**Blue Flame Companies, Timothy Boss**

We have reviewed the insurance requirements Timothy Boss sent over via e-mail on 6/23/2014; our review determined the following:

Additional Requirements	Comments
☒ Notice of Cancellation	☒ Please advise if you are required to meet the cancellation provisions stated in the contract. Notice of cancellation, or material change, can only be granted through language specifically on the policy and such language or endorsements, if available from your carrier(s), may result in an additional premium.
☒ Indemnification or Hold Harmless or Contractual Liability to insure this contract provisions	☒ See important note below

Additional Insured Endorsement/Waiver of Subrogation Endorsement Note: Most additional insured/waiver of subrogation forms require that a written contract be executed in order to trigger the additional insured coverage under the policy. The requirement sometimes can be as specific as to require that the additional insured must be a direct signatory on the contract with you. Our review does not verify whether you have the appropriate contract(s) in place or not.

IMPORTANT: Many contracts or insurance requirements include hold harmless or indemnification wording that requires you to indemnify another party for claims. All General Liability policies contain exclusions that limit coverage; and thus insurance is not available in the marketplace to fully cover such broadly written contract provisions that are not in accord with policy exclusions.

Reviewed By: Alyssa Ehrsam Date: 6/23/2014

CERTIFICATE OF LIABILITY INSURANCE

DATE (MM/DD/YYYY): 6/23/2014

THIS CERTIFICATE IS ISSUED AS A MATTER OF INFORMATION ONLY AND CONFERS NO RIGHTS UPON THE CERTIFICATE HOLDER. THIS CERTIFICATE DOES NOT AFFIRMATIVELY OR NEGATIVELY AMEND, EXTEND OR ALTER THE COVERAGE AFFORDED BY THE POLICIES BELOW. THIS CERTIFICATE OF INSURANCE DOES NOT CONSTITUTE A CONTRACT BETWEEN THE ISSUING INSURER(S), AUTHORIZED REPRESENTATIVE OR PRODUCER, AND THE CERTIFICATE HOLDER.

IMPORTANT: If the certificate holder is an ADDITIONAL INSURED, the policy(ies) must be endorsed. If SUBROGATION IS WAIVED, subject to the terms and conditions of the policy, certain policies may require an endorsement. A statement on this certificate does not confer rights to the certificate holder in lieu of such endorsement(s).

PRODUCER

Assurance Agency, Ltd
1750 E Golf Road
Suite 1100
Schaumburg IL 60173

CONTACT NAME:
PHONE (A/C, No, Ext): (847) 463-7883 **FAX (A/C, No):** (847) 440-9127
E-MAIL ADDRESS: mpozzi@assuranceagency.com

INSURER(S) AFFORDING COVERAGE	NAIC #
INSURER A : Starr Indemnity and Liability Compa	38318
INSURER B : Federal Insurance Company	20281
INSURER C :	
INSURER D :	
INSURER E :	
INSURER F :	

INSURED BLUEFLA-01

Blue Flame Companies
Blue Flame Crew West, LLC
PO Box 525
Naperville IL 60566

COVERAGES **CERTIFICATE NUMBER:** 409111424 **REVISION NUMBER:**

THIS IS TO CERTIFY THAT THE POLICIES OF INSURANCE LISTED BELOW HAVE BEEN ISSUED TO THE INSURED NAMED ABOVE FOR THE POLICY PERIOD INDICATED. NOTWITHSTANDING ANY REQUIREMENT, TERM OR CONDITION OF ANY CONTRACT OR OTHER DOCUMENT WITH RESPECT TO WHICH THIS CERTIFICATE MAY BE ISSUED OR MAY PERTAIN, THE INSURANCE AFFORDED BY THE POLICIES DESCRIBED HEREIN IS SUBJECT TO ALL THE TERMS, EXCLUSIONS AND CONDITIONS OF SUCH POLICIES. LIMITS SHOWN MAY HAVE BEEN REDUCED BY PAID CLAIMS.

INSR LTR	TYPE OF INSURANCE	ADDL INSR	SUBR WVD	POLICY NUMBER	POLICY EFF (MM/DD/YYYY)	POLICY EXP (MM/DD/YYYY)	LIMITS	
A	**GENERAL LIABILITY**			1000065006141	5/10/2014	5/10/2015	EACH OCCURRENCE	$1,000,000
	X COMMERCIAL GENERAL LIABILITY						DAMAGE TO RENTED PREMISES (Ea occurrence)	$100,000
	CLAIMS-MADE X OCCUR						MED EXP (Any one person)	$5,000
							PERSONAL & ADV INJURY	$1,000,000
							GENERAL AGGREGATE	$2,000,000
	GEN'L AGGREGATE LIMIT APPLIES PER:						PRODUCTS - COMP/OP AGG	$2,000,000
	POLICY PRO-JECT LOC							$
A	**AUTOMOBILE LIABILITY**			SISIPCA08294314	5/10/2014	5/10/2015	COMBINED SINGLE LIMIT (Ea accident)	$1,000,000
	X ANY AUTO						BODILY INJURY (Per person)	$
	ALL OWNED AUTOS / SCHEDULED AUTOS						BODILY INJURY (Per accident)	$
	X HIRED AUTOS / X NON-OWNED AUTOS						PROPERTY DAMAGE (Per accident)	$
								$
A	**UMBRELLA LIAB** X OCCUR			1000336106141	5/10/2014	5/10/2015	EACH OCCURRENCE	$10,000,000
	X **EXCESS LIAB** CLAIMS-MADE						AGGREGATE	$
	DED RETENTION $							$
B	**WORKERS COMPENSATION AND EMPLOYERS' LIABILITY** Y / N	N / A		004 4727758	5/10/2014	5/10/2015	WC STATU-TORY LIMITS / OTH-ER	
	ANY PROPRIETOR/PARTNER/EXECUTIVE OFFICER/MEMBER EXCLUDED? **(Mandatory in NH)** If yes, describe under DESCRIPTION OF OPERATIONS below						E.L. EACH ACCIDENT	$1,000,000
							E.L. DISEASE - EA EMPLOYEE	$1,000,000
							E.L. DISEASE - POLICY LIMIT	$1,000,000
A	Professional Liability Pollution			1000065006141	5/10/2014	5/10/2015	1,000,000 1,000,000	5,000/Deductible

DESCRIPTION OF OPERATIONS / LOCATIONS / VEHICLES (Attach ACORD 101, Additional Remarks Schedule, if more space is required)

RE: All work performed by the Named Insured on behalf of the Certificate Holder.

It is agreed that the following are added as Additional Insureds, when required by written contract, on the General Liability on a primary and non-contributory basis and Additional Insured on the Automobile policy with respect to operations performed by the Named Insured in connection with this project:
1. City of Sacramento, its officials, employees and volunteers
See Attached...

CERTIFICATE HOLDER

City of Sacramento
Recycling & Solid Waste
2812 Meadowview Road, BLDG 1
Sacramento CA 95832

CANCELLATION

SHOULD ANY OF THE ABOVE DESCRIBED POLICIES BE CANCELLED BEFORE THE EXPIRATION DATE THEREOF, NOTICE WILL BE DELIVERED IN ACCORDANCE WITH THE POLICY PROVISIONS.

AUTHORIZED REPRESENTATIVE

Daniel A. Kferas

© 1988-2010 ACORD CORPORATION. All rights reserved.

AGENCY CUSTOMER ID: BLUEFLA-01

LOC #: _____

ADDITIONAL REMARKS SCHEDULE

AGENCY	NAMED INSURED
Assurance Agency, Ltd	Blue Flame Companies Blue Flame Crew West, LLC PO Box 525 Naperville IL 60566
POLICY NUMBER	
CARRIER / NAIC CODE	EFFECTIVE DATE:

ADDITIONAL REMARKS

THIS ADDITIONAL REMARKS FORM IS A SCHEDULE TO ACORD FORM,

FORM NUMBER: 25 FORM TITLE: CERTIFICATE OF LIABILITY INSURANCE

A Waiver of Subrogation in favor of the Additional Insureds applies to the Worker's Compensation, General Liability and Automobile policies, when required by written contract and where allowed by law.

© 2008 ACORD CORPORATION. All rights reserved.

The ACORD name and logo are registered marks of ACORD

City of SACRAMENTO
Department of General Services

CONTRACT SPECIFICATIONS
FOR

28th Street Landfill Flare Replacement

B14131771001
Engineer's Estimate: $650,000
Construction Time: TEN (10) Months

Plans Attached

Mandatory Pre-Bid Conference:
MAY 15, 2014
1 – 2:30pm
20 28th Street, Landfill Office
Sacramento, CA 95816

Bids to be received before **2:00 PM**
Wednesday, May 28, 2014
New City Hall, Office of the City Clerk
915 I Street, 5th Floor
Sacramento, CA 95814

LBE Program Participation

For information on meeting the City of Sacramento's Local Business Enterprise (LBE) project goals, please contact Lorrie Lowry at (916) 808-5448, or visit the City of Sacramento's small business web site at: http://www.cityofsacramento.org/econdev/business-open/small-business-certification.cfm

28th Street Landfill Flare Replacement

TABLE OF CONTENTS

LBE INFORMATION	Page 1 of 1
INVITATION TO BID	Page 1 of 2
NOTICE TO CONTRACTORS	Page 1 of 2
PROPOSAL FORMS (To be submitted by all Bidders as the Bid Page)	
Sealed Proposal	Page 1 of 4
Bid Proposal Guarantee	Page 1 of 1
Subcontractor and LBE Participation Verification	Page 1 of 1
Drug-Free Workplace Policy and Affidavit	Page 1 of 1
Minimum Qualifications Questionnaire	Page 1 of 6
Requirements of the Non-Discrimination in Employee Benefits Code	Page 1 of 9
Construction and Demolition (C&D) Debris Recycling Requirements	Page 1 of 2
C & D Waste Management Plan	Page 1 of 2
C&D Debris Haulers & Facilities	Page 1 of 1
C&D Debris Waste Log	Page 1 of 1
Green Contracting Survey	Page 1 of 3
LBE Requirements (City Contracts no Federal Funds Used)	Page 1 of 5
CONTRACT FORMS (Only for successful Bidder)	
Worker's Compensation Insurance Certification	Page 1 of 1
Certificate of Insurance	Page 1 of 1
Agreement	Page 1 of 15
Bonds	Page 1 of 2
• Performance Bond • Payment Bond	
CALIFORNIA LABOR CODE RELATING TO APPRENTICES	Page 1 of 1
TECHNICAL SPECIFICATIONS	

LBE INFORMATION

The City of Sacramento's Local Business Development (LBE) program establishes an annual local business enterprise (LBE) participation goal for City contracts, and authorizes City departments to require minimum LBE participation levels in individual contracts. Under City Code section 3.60.270, all bidding contractors must meet or exceed participation goals established for this project in order to qualify as a responsible bidder.

For information on meeting the City of Sacramento's Local Business Enterprise (LBE) project goals, please contact Lorrie Lowry at (916) 808-5448, or visit the City of Sacramento's small business web site at: http://www.cityofsacramento.org/econdev/business-open/small-businesscertification.cfm

INVITATION TO BID

Sealed Proposals will be received by the City Clerk of the City of Sacramento at the office of the City Clerk, New City Hall, 5TH Floor, located at 915 I Street between 9th and 10th Streets, up to the hour of **2:00 PM** on **MAY 28, 2014** and will be opened as soon thereafter as business allows, at 915 I Street, Historic City Hall, Hearing Room, 2nd Floor, Sacramento, California. for:

28TH STREET LANDFILL FLARE REPLACEMENT

As set forth in the Construction Documents.

Proposals received and work performed there-under shall comply with the requirements of Title 3 of the Sacramento City Code. Each Bid Proposal shall be accompanied by bid security of at least 10% of the sum of the Bid Proposal which conforms to the requirements of Section 7.0 of the Instructions to Bidders. The right to reject Proposals or to waive any error or omission in any Bid Proposal received is reserved by the City. Signed proposals shall be submitted on the printed forms contained in the Project Manual and enclosed in an envelope marked: Sealed Bid Proposal for:

28TH STREET LANDFILL FLARE REPLACEMENT

LBE CERTIFICATION STATEMENTS ARE DUE BY THE CLOSE OF BUSINESS TWO DAYS AFTER BID OPENING to:
(if not included at the time of bid)
David Levine
Department of General Services, Recycling and Solid Waste Division
2812 Meadowview Road Bldg. 1, Sacramento, CA 95832
Phone: (916) 808-7943/ Fax: (916) 808-4999/ Email: dlevine@cityofsacramento.org

Failure to submit the required LBE information may be grounds for finding the bid non-responsive.

You can view and download the plans and Contract Documents from:

PLANET BIDS
http://www.planetbids.com/portal/portal.cfm?CompanyID=15300#

Subcontractors shall comply with the rates of wages currently established by the Director of Industrial Relations under provisions of Sections 1773 of the Labor Code of the State of California, a copy of which is on file in the office of the City Clerk. In accordance with Sacramento City Code Section 3.60.180 and Section 1771.5 of the California Labor Code, the payment of the general prevailing rate of per diem wages or the general prevailing rate of per diem wages for holiday and overtime is not required for any Public Construction project of $25,000 or less, or Public Maintenance project of $15,000 or less. The City of Sacramento has an approved Labor Compliance Program. **The City uses an electronic system for the submission of Labor Compliance Reports, which became effective May 1, 2007.** Each contractor and every lower-tier subcontractor submits certified payrolls and labor compliance documentation electronically at the discretion of and in the manner specified by the City of Sacramento.

Electronic submittal is via a web-based system, accessed on the World Wide Web by a web browser. Each contractor and subcontractor is given a Log On identification and password to access the City of Sacramento's reporting system.

Use of the system may entail additional data entry of weekly payroll information including; employee identification, labor classification, total hours worked and hours worked on this project, wage and benefit rates paid, etc. The contractor's payroll and accounting software might be capable of generating a 'comma delimited file' that will interface with the software.

Disseminate these provisions to every lower-tier subcontractor and vendor required to provide labor compliance documentation.

All questions regarding this Labor Compliance Program should be directed to the department's contracts staff or Contracts Services at (916) 808-5524.

Pursuant to Sacramento City Code Section 3.60.250, any Agreement awarded pursuant to this Invitation to Bid shall contain a provision permitting the substitution of securities for any monies withheld to ensure performance under the Agreement. The terms of such provisions shall be according to the requirements and the form required by the City.

Bid protests must be filled and maintained in accordance with the provisions of Sections 3.60.460 through 3.60.560 of the Sacramento City Code. Bid protests that do not comply with Sections 3.60.460 through 3.60.560 of the Sacramento City Code shall be invalid and shall not be considered. A bid protest fee of $750.00 is required at the time of filing to be considered valid in accordance with City of Sacramento Resolution No. 2003-231 dated April 29, 2003. As used herein, the term "bid protest" includes any bid protest that (1) claims that one or more bidders on this contract should be disqualified or rejected for any reason, or (2) contests a City staff recommendation to award this contract to a particular bidder, or (3) contests a City staff recommendation to disqualify or reject one or more bidders on this contract. A copy of Sections 3.60.460 through 3.60.560 of the Sacramento City Code may be obtained from the Project Manager, or from the City Clerk, located at 915 I Street, 5th Floor, Sacramento, CA 95814.

THE FOLLOWING DOCUMENTS

ARE TO BE COMPLETED AND

SUBMITTED WITH THE BID PACKAGE

CONTRACTOR NAME: _____

CITY OF SACRAMENTO

SEALED PROPOSAL

(MUST BE SIGNED BY BIDDER)

The Sealed Proposal will be received not later than **May 28, 2014**, at the Office of the City Clerk, New City Hall, at 915 I Street, 5th Floor, Sacramento, California and opened at **2:00 PM**, or as soon thereafter as business allows, on **May 28, 2014**, by the Office of the City Clerk, 915 I Street, Historic City Hall, Hearing Room, 2nd Floor, Sacramento, California.

TO THE HONORABLE CITY COUNCIL:

The undersigned hereby proposes and agrees to furnish any and all required labor, material, transportation, and services for

28TH STREET LANDFILL FLARE REPLACEMENT

in the City and County of Sacramento, California.

TOTAL BID: _____ ($_____).

The work herein described is to be performed in strict conformity with the Plans, City of Sacramento Standard Specifications (Resolution No. 89-216) and these Special Provisions, all as on file in the Office of the City Clerk, at the following unit prices.

Item No.	Description	Unit		Unit Cost	Amount
1	Mobilization & demobilization, including dust, noise and traffic control, observing health and safety provisions at all times, equipment storage or relocation per City, clean-up and site restoration, and coordination with landfill operator (City) or their authorized representative.	1	ls		
2	Survey including horizontal and vertical controls, staking the locations of the vertical LFG extraction wells, horizontal LFG collectors and LFG header and lateral alignments, condensate pumping system and LFG flaring system.	1	ls		
3	Utility location survey and protection of all existing above- and below-grade utilities in the work area	1	ls		
4	Furnish and install above-grade high-density polyethylene (HDPE) ping and fittings, including LFG header connection piping and Unistrut supports; and, reinstallation of piping and fitting required for connection and reuse of equipment within the BFF.	1	ls		
5	Furnish, install and test skid-mounted LFG Flaring System, including existing utility clearances and protection, removal and restoration of existing roadway surfaces, grading and compaction, reinforced concrete pads and slabs, blower skid, vertical enclosed ground flare, all controls and instrumentations, piping valves, pipe supports, gauges, controls, lighting; complete in place, tested and ready for use.	1	ls		

6	Provide interconnection between existing operational flare and new LFG Flaring System control panel; complete in place, tested and ready for use. Work includes, connection and below-grade electrical work to existing control panel(s) for existing John Zink flare system at site, per the electrical drawings. Contractor to coordinate work with new flare equipment vendor and shall provide their electrical contractor for flare vendor technician for an estimated 2 days during start-up of new LFG Flaring System.	1	ls		
7	Furnish, install and test air rotary screw compressor, including drive motor, starter cubical, oil system, air system, integral refrigerated dryer, electro-pneumatic control panel, air receiver tank, reinforced concrete pad, overhead cover. Service air connections with quick-disconnect shall be provided to the flaring system.	1	ls		
8	Remove and replace chain link fencing and gates if necessary to be removed for construction of new blower/flare station (BFS) equipment.	1	lf		
9	Site electrical work for BFS System and electrical grounding for said system, including coordination with Utility Provider, complete in place, tested and ready for use.	1	ls		
10	Prepare as-built drawings, including red-line markups, vendor As-Built Drawings, and any other affiliated information as set forth in the Contract Technical Specifications.	1	ls		
11	De-activate and/or dismantle existing BFS components and demolish existing concrete pads within the work area. Reuse, reinstall, and re-activate blower and ancillary equipment in other BFF site location. Includes all electrical reassembly and removal of old components (Blowers, compressors, condensate tank, miscellaneous piping and BFS components not needed for the new system to a City designated area near site), and connection and reactivation of reused equipment. Reactivation includes all necessary fittings and components (e.g., expansion couplings, etc.) required to retrofit blower at new location. Includes grading and restoration of the dismantling work area to prepare for new concrete pads and equipment.	1	ls		
12	Connection of existing condensate sump to new BFS System and existing condensate storage tank, activation, complete and in place, and ready for operation. Includes, all necessary electrical, pneumatic, and plumbing required to provide connectivity and be operable with the new BFS components.	1	ls		
13	Perform flare source test per SMAQMD requirements; complete as specified and directed by the Engineer.	1	ls		
	SUBTOTAL				
	TOTAL COST				

If awarded the Agreement, the undersigned agrees to sign said Agreement and furnish the necessary surety bonds and insurance certificates within ten (10) days after receipt of the notice of award of Agreement, and to begin work within fifteen (15) days after the Notice to Proceed by the City.

In determining the amount bid by each bidder, the City shall disregard mathematical errors in addition, subtraction, multiplication, and division that appear obvious on the face of the Proposal. When such a mathematical error appears on the face of the Proposal, the City shall have the right to correct such error and to compute the total amount bid by said bidder on the basis of the corrected figure or figures.

When an item price is required to be set forth in the Proposal, and the total for the item set forth separately does not agree with a figure which is derived by multiplying the item price times the Engineer's estimate of the quantity of work to be performed for said item, the item price shall prevail over the sum set forth as the total for the item unless, in the sole discretion of the City, such a procedure would be inconsistent with the policy of the bidding procedure. The total paid

for each such item of work shall be based upon the item price and not the total price. Should the Proposal contain only total price for the item and the item price is omitted, the City shall determine the item price by dividing the total price for the item by the Engineer's estimate of the estimated quantities of work to be performed as items of work.

If the Proposal contains neither the item price nor the total price for the item, then it shall be deemed incomplete and the Proposal shall be disregarded.

The undersigned has examined the location of the proposed Work, the local conditions at the place where the Work is to be done, is familiar with the Contract Documents and is familiar and expressly agrees to the liquidated damages provision of the Contract Documents. The undersigned has checked carefully all of the foregoing figures and understands that the City of Sacramento will not be responsible for any errors or omissions on the part of the undersigned in making up this Bid Proposal.

Enclosed is Bid Proposal Guarantee, as required, consisting of a bidder's bond or other acceptable security for not less than ten percent (10%) of the amount Bid Proposal.

The undersigned agrees that all addenda received and acknowledged herein shall become a part of and be included in this Bid Proposal. This Bid Proposal includes the following addenda:

Add. # _____ DATE _____

Add. # _____ DATE _____

Add. # _____ DATE _____

NOTE: State whether your concern is a corporation, a co-partnership, private individual, or individuals doing business under a firm name.

If the Bidder is a corporation, the Bid Proposal must be executed in the name of the corporation and must be signed by a duly authorized officer of the corporation.

If the Bidder is a partnership, the Bid Proposal must be executed in the name of the partnership and one of the partners must subscribe their signature thereto as the authorized representative of the partnership.

AMOUNT OF BID PROPOSAL GUARANTEE ENCLOSED:

($_____) not less than ten percent (10%) of amount Bid Proposal

FOR CITY USE ONLY

BID BOND SECURITY

- ☐ *Properly Signed*
- ☐ *Improperly Signed*
- ☐ *Not Included*
- ☐ *Not Required*

TYPE OF DEPOSIT

- ☐ *Bid Bond*
- ☐ *Cashier/Certified Check*
- ☐ *Other* _____

Initial: _____

CONTRACTOR:

By: _____
(Signature)

_____
(Print or Type)

Title _____

Address _____

_____

Telephone No. _____

Fax No. _____

EMAIL ADDRESS _____

Date _____

PLEASE PRINT CLEARLY AS BID RESULTS WILL BE SENT VIA EMAIL

Contractor's License No. _____ Type _____

Expiration Date _____

Tax I.D. Nos.- Fed. _____ State _____

City of Sacramento Business Operation Tax Certificate No. _____
(City will not award contract if Certificate Number is missing.)

BID PROPOSAL GUARANTEE

KNOW ALL MEN BY THESE PRESENTS,

That we,_____

as Principal, and _____

a corporation duly organized under the laws of the State of _____ and duly licensed to become sole surety on bonds required or authorized by the State of California, as Surety, are held and firmly bound unto the City of Sacramento, hereinafter called the City, in the penal sum of ten percent (10%) of the (BASE OR LUMP SUM) Proposal of the Principal above named, or other amount as set forth in the Invitation to Bidders, submitted by said Principal to the City for the Work described below, for the payment of which sum in lawful money of the United States, well and truly to be made, we bind ourselves, our heirs, executors, administrators and successors, jointly and severally, firmly by these presents.

THE CONDITION OF THIS OBLIGATION IS SUCH
That whereas the Principal has submitted the above-mentioned Proposal to the City, for which Proposals are to be opened at the Department of City Clerk, City of Sacramento, located at **915 I Street, Historic City Hall, Hearing Room, 2nd Floor, Sacramento, CA 95814** up to the hour of 2:00 p.m. on **MAY 28, 2014** for the Work specifically described as follows:

28TH STREET LANDFILL FLARE REPLACEMENT

NOW, THEREFORE, if the aforesaid Principal is awarded the Contract and within the time and manner required under the Contract Documents, enters into a written Contract, in the prescribed form, in accordance with the Proposal, and files two (2) bonds with the City, one to guarantee faithful performance and the other to guarantee payment for labor and materials, and files the required insurance policies with the City, all as required by the Contract Documents or by law, then the obligation shall be null and void; otherwise it shall be and remain in full force and effect.

In the event suit is brought upon this bond by the Obligee and judgment is recovered, the Surety shall pay all costs incurred by the Obligee in such suit, including a reasonable attorney's fee to be fixed by the court, which sums shall be additional to the principal amount of this bond.

IN WITNESS THEREOF We have hereunto set our hands and seal this _____
day of _____ 20_____.

_____
(Contractor) (Seal)
By _____
Title _____

ORIGINAL APPROVED AS TO FORM:

_____
City Attorney

_____
(Surety)(Seal)
By _____
Title _____
Agent Name and Address _____
_____
Agent Phone # _____
Surety Phone # _____
California License # _____

City of SACRAMENTO

Subcontractor and Local Business Enterprise (LBE) Participation Form

THIS FORM MUST BE SUBMITTED WITH THE SEALED BID PROPOSAL
USE ONLY BASE BID AMOUNT TO ESTIMATE DOLLAR VALUE

To be eligible for award of this contract, the bidder shall list the business entities used to attain the 5% LBE requirement. Additionally, the bidder shall list all other subcontractors who perform work, render service, or provide materials in an amount in excess of one-half of 1 percent of the total bid amount. In the case of bids for the construction of streets and highways, including bridges, subcontractors whose subcontract value exceeds one-half of 1 percent of the total bid or ten thousand dollars ($10,000), whichever is greater, shall be listed. Estimated dollar values shall be provided for all work / services listed. The failure to attain the 5% LBE participation or the inclusion of false information or the omission of required information will render the bid non-responsive.

Prime Contractor Name: _____ Base Bid Amount: _____ Is the Prime Contractor a LBE ? _____Yes ____ No

Business Entity/Subcontractor Name and Address	Subcontractor License No.	Indicate LBE (subject to verification)	Items of Work and/or Description of Work, Services, or Materials to be provided to complete contract	Estimated Dollar Value of Work, Services, or Materials to be provided for Base Bid

The Prime Contractor hereby certifies that each subcontractor listed on this Subcontractor and LBE Participation Form has been notified that it has been listed and has consented in writing to its name being submitted for this contract. The Prime Contractor also certifies that it will notify each subcontractor listed on this Form in writing if the contract award is made to the Prime Contractor, and will make all documentation relevant to the subcontractor and LBE participation available to City of Sacramento upon request. The Prime Contractor further certifies that all of the information contained in this Form is true and correct and acknowledges that the City will rely on the accuracy of this information in awarding the contract.

COPY AND ATTACH ADDITIONAL SHEETS AS NECESSARY

Page ___ of ____

LBE PRIME CONTRACTOR AND SUBCONTRACTOR PARTICIPATION VERIFICATION INFORMATION ARE DUE BY CLOSE OF BUSINESS TWO DAYS AFTER BID OPENING.
THE SUBCONTRACTOR LICENSING NUMBER IS DUE WITHIN 24 HOURS OF THE BID DUE DATE AND TIME.

DRUG-FREE WORKPLACE POLICY AND AFFIDAVIT

BID PROPOSAL MAY BE DECLARED NONRESPONSIVE IF THIS FORM (COMPLETED) IS NOT ATTACHED.
Pursuant to City Council Resolution CC90-498 dated 6/26/90 the following is required.

The undersigned contractor certifies that it and all subcontractors performing under this Agreement will provide a drug-free workplace by:

1. Publishing a "Drug-Free Workplace" statement notifying employees that the unlawful manufacture, distribution, dispensing, possession or use of a controlled substance is prohibited in the contractor's workplace and specifying the actions that will be taken against employees for violations of such prohibition.

2. Establishing a Drug-Free Awareness Program to inform employees about:

a. The dangers of drug abuse in the workplace.
b. The contractor's policy of maintaining a drug-free workplace.
c. Any available drug counseling, rehabilitation, and employee assistance program.
d. The penalties that may be imposed upon employees for drug abuse violations occurring in the workplace.

3. Notify employees that as a condition of employment under this Agreement, employees will be expected to:

a. Abide by the terms of the statement.
b. Notify the employer of any criminal drug statute conviction for a violation occurring in the workplace.

4. Making it a requirement that each employee to be engaged in the performance of the Agreement be given a copy on the "Drug-Free Workplace" statement.

5. Taking one of the following appropriate actions, within thirty (30) days of receiving notice from an employee or otherwise receiving such notice, that said employee has received a drug conviction for a violation occurring in the workplace:

a. Taking appropriate disciplinary action against such an employee, up to and including termination; or
b. Requiring such employee to participate satisfactorily in a drug abuse assistance or rehabilitation program approved for such purposes by a federal, state, or local health, law enforcement or other appropriate agency.

***** I certify that no person employed by this company, corporation, or business has been convicted of any criminal drug statute violation on any job site or project where this company, corporation or business was performing was within three years of the date of my signature below.

EXCEPTION: _____ _____ _____
Date **Violation Type** **Place of Occurrence**

If additional space is required use back of this form.

*** The above statement will also be incorporated as a part of each subcontract agreement for any and all subcontractors selected for performance on this project.**

IN THE EVENT THIS COMPANY, CORPORATION, OR BUSINESS IS AWARDED THIS CONSTRUCTION AGREEMENT, AS A RESULT OF THIS BID; THE CONTRACTOR WITH HIS/HER SIGNATURE REPRESENTS TO THE CITY THAT THE INFORMATION DISCLOSED IN THIS DOCUMENT IS COMPLETE AND ACCURATE. IT IS UNDERSTOOD AND AGREED THAT FALSE CERTIFICATION IS SUBJECT TO IMMEDIATE TERMINATION BY THE CITY.

The Representations Made Herein On This Document Are Made Under Penalty Of Perjury.

CONTRACTOR'S NAME: _____

BY: _____ **Date:** _____
Signature **Title**

Effects of violations: a. Suspension of payments under the Agreement. **b.** Suspension or termination of the Agreement**. c.** Suspension or debarment of the contractor from receiving any Agreement from the City of Sacramento for a period not to exceed five years.

MINIMUM QUALIFICATIONS QUESTIONNAIRE

Sacramento City Code Section 3.60.020 authorizes the Sacramento City Council to adopt standard minimum qualifications for bidders on competitively bid public works construction projects, and requires, among other provisions, that a bidder meet such minimum qualifications at the time of bid opening in order to bid. On July 31, 2007, the City Council adopted Resolution No. 2007-574 establishing these standard minimum qualifications. Pursuant to City Code section 3.60.020, a bidder failing to meet these minimum qualifications at the time of bid opening shall not be considered a responsible bidder for purposes of bidding on the subject project.

All bidders must demonstrate compliance with the minimum qualifications established by Resolution No. 2007-574 by completing all of the questions contained in this questionnaire. Bidder responses shall be limited to those operating business units, offices, branches and/or subsidiary divisions of the bidder that will be involved with the performance of any project work if awarded the contract. If a bidder answers "yes" to any single question, fails to submit a fully completed questionnaire, or submits false information, this will result in a determination that the minimum qualifications are not met, and the bidder shall not be considered a qualified bidder for purposes of bidding on this contract. If two or more entities submit a bid on a contract as a Joint Venture, each entity within the Joint Venture must separately meet these minimum qualifications for the Joint Venture to be considered a qualified bidder.

The City of Sacramento ("City") shall make its determination on the basis of the submitted questionnaire, as well as any relevant information that is obtained from others or as a result of investigation by the City. While it is the intent of this questionnaire to assist the City in determining whether bidders possess the minimum qualifications necessary to submit bids on the City's competitively bid public works construction contracts, the fact that a bidder submits a questionnaire demonstrating that it meets these minimum qualifications shall not in any way limit or affect the City's ability to: (1) review other information contained in the bid submitted by the bidder, and additional relevant information, and determine whether the contractor is a responsive and/or responsible bidder; or (2) establish pre-qualification requirements for a specific contract or contracts.

By submitting this questionnaire, the bidder consents to the disclosure of its questionnaire answers: (i) to third parties for purposes of verification and investigation; (ii) in connection with any protest, challenge or appeal of any action taken by the City; and (iii) as required by any law or regulation, including without limitation the California Public Records Act (Calif. Gov't Code sections 6250 et seq.). Each questionnaire must be signed under penalty of perjury in the manner designated at the end of the form, by an individual who has the legal authority to bind the bidder submitting the questionnaire. If any information provided by a bidder becomes inaccurate, the bidder shall immediately notify the City and provide updated accurate information in writing, under penalty of perjury.

FOR CITY CLERK USE ONLY

RESOLUTION NO.: 2007-574

DATE ADOPTED: July 31, 2007

QUESTIONNAIRE

NOTICE: **For firms that maintain other operating business units, offices, branches and/or subsidiary divisions that will not be involved with the performance of any project work if the firm is awarded the contract, references hereafter to "your firm" shall mean only those operating business units, offices, branches and/or subsidiary divisions that will be involved with the performance of any project work.**

All of the following questions regarding "your firm" refer to the firm (corporation, partnership or sole proprietor) submitting this questionnaire, as well as any firm(s) with which any of your firm's owners, officers, or partners are or have been associated as an owner, officer, partner or similar position within the last five years
The firm submitting this questionnaire shall not be considered a responsible bidder if the answer to any of these questions is "yes", or if the firm submits a questionnaire that is not fully completed or contains false information.

1. **Classification & Expiration Date(s) of California** Contractor's License Number(s) held by firm:

   _____

2. Has a contractor's license held by your firm and/or any owner, officer or partner of your firm been revoked at anytime in the last five years?

   ☐ Yes ☐ No

3. Within the last five years, has a surety firm completed a contract on your firm's behalf, or paid for completion of a contract to which your firm was a party, because your firm was considered to be in default or was terminated for cause by the project owner?

   ☐ Yes ☐ No

4. At the time of submitting this minimum qualifications questionnaire, is your firm ineligible to bid on or be awarded a public works contract, or perform as a subcontractor on a public works contract, pursuant to either California Labor Code section 1777.1 (prevailing wage violations) or Labor Code section 1777.7 (apprenticeship violations)?

   ☐ Yes ☐ No

5. At any time during the last five years, has your firm, or any of its owners, officers or partners been convicted of a crime involving the awarding of a contract for a government construction project, or the bidding or performance of a government contract?

   ☐ Yes ☐ No

FOR CITY CLERK USE ONLY

RESOLUTION NO.: 2007-574

6. Answer either subsection A or B, as applicable:

A. Your firm has completed three or more government construction contracts in Sacramento County within the last five years: Within those five years, has your firm been assessed liquidated damages on three or more government construction contracts in Sacramento County for failure to complete contract work on time?

NOTE: If there is a pending administrative or court action challenging the assessment of liquidated damages on a government contract within the last five years, you need not include that contract in responding to this question.

☐ Yes ☐ No ☐ Not applicable

OR

B. Your firm has not completed at least three government construction contracts in Sacramento County within the last five years: Within the last three years, has your firm been assessed liquidated damages on three or more government construction contracts for failure to complete contract work on time?

NOTE: If there is a pending administrative or court action challenging an assessment of liquidated damages on a government contract within the last three years, you need not include that contract in responding to this question.

☐ Yes ☐ No ☐ Not applicable

7. In the last three years has your firm been debarred from bidding on, or completing, any government agency or public works construction contract for any reason?

NOTE: If there is a pending administrative or court action challenging a debarment, you need not include that debarment in responding to this question.

☐ Yes ☐ No

8. Has CAL OSHA assessed a total of three or more penalties against your firm for any "serious" or "willful" violation occurring on construction projects performed in Sacramento County at any time within the last three years?

NOTE: If there is a pending administrative or court action appealing a penalty assessment, you need not include that penalty assessment in responding to this question.

☐ Yes ☐ No

FOR CITY CLERK USE ONLY

RESOLUTION NO.: 2007-574

9. Answer either subsection A or B, as preferred:

A. In the last three years has your firm had a three year average Workers' Compensation experience modification rate exceeding 1.1?

☐ Yes ☐ No

OR

B. In the last three years has your firm had a three-year average incident rate for total lost workday cases exceeding 10?

NOTE: Incident rates represent the number of lost workday cases per 100 full-time workers and is to be calculated as: (N/EH) x 200,000, where

N	**=**	**number of lost workday cases (as defined by the U.S. Dept. of Labor, Bureau of Labor Statistics)**
EH	**=**	**total hours worked by all employees during the calendar year**
200,000	**=**	**base for 100 equivalent full-time working (working 40 hours per week, 50 weeks per year)**

☐ Yes ☐ No

10. In the past three years, has the federal EPA, Region IX or a California Air Quality Management District or Regional Water Quality Control Board assessed penalties three or more times, either against your firm, or against the project owner for a violation resulting in whole or in part from any action or omission by your firm on a project on which your firm was a contractor in Sacramento County?

NOTE: If there is a pending administrative or court action appealing a penalty assessment, you need not include that penalty assessment in responding to this question.

☐ Yes ☐ No

FOR CITY CLERK USE ONLY

RESOLUTION NO.: 2007-574

DATE ADOPTED: July 31, 2007

11. In the past three years, has the federal EPA, Region IX or a California Air Quality Management District or Regional Water Quality Control Board assessed a single penalty of $100,000 or more, either against your firm, or against the project owner for a violation resulting in whole or in part from any action or omission by your firm on a project on which your firm was the contractor in Sacramento County?

NOTE: If there is a pending administrative or court action appealing a penalty assessment, you need not include that penalty assessment in responding to this question.

☐ Yes ☐ No

12. In the past three years, have civil penalties been assessed against your firm pursuant to California Labor Code 1777.7 for violation of California public works apprenticeship requirements, three or more times?

NOTE: If there is a pending administrative or court action appealing a penalty assessment, you need not include that penalty assessment in responding to this question.

☐ Yes ☐ No

13. In the past three years, has a public agency in California withheld contract payments or assessed penalties against your firm for violation of public works prevailing wage requirements, three or more times?

NOTE: If there is a pending administrative or court action appealing a withholding or penalty assessment, you need not include that withholding or penalty assessment in responding to this question.

☐ Yes ☐ No

14. Has your firm been assessed penalties for violation of public works prevailing wage requirements in California, in an aggregate amount for the past three years of $50,000 or more?

NOTE: If there is a pending administrative or court action appealing a penalty assessment, you need not include that penalty assessment in responding to this question.

☐ Yes ☐ No

FOR CITY CLERK USE ONLY

RESOLUTION NO.: 2007-574

VERIFICATION AND SIGNATURE

I, the undersigned, certify and declare that I have read all the foregoing answers to this Minimum Qualifications Questionnaire, and know their contents. The matters stated in these Questionnaire answers are true of my own knowledge and belief, except as to those matters stated on information and belief, and as to those matters I believe them to be true. I declare under penalty of perjury under the laws of the State of California that the foregoing is true and correct.

Signed at _____, on _____.
(Location) (Date)

Signature: _____

Print name: _____

Title: _____

NOTE: If two or more entities submit a bid on a contract as a Joint Venture, each entity within the Joint Venture must submit a separate Minimum Qualifications Questionnaire.

FOR CITY CLERK USE ONLY

RESOLUTION NO.: 2007-574

REQUIREMENTS OF THE NON-DISCRIMINATION IN EMPLOYEE BENEFITS CODE

INTRODUCTION

The Sacramento Non-Discrimination In Employee Benefits Code (the "Ordinance"), codified as Sacramento City Code Chapter 3.54, prohibits City contractors from discriminating in the provision of employee benefits between employees with spouses and employees with domestic partners, and between the spouses and domestic partners of employees.

APPLICATION

The provisions of the Ordinance apply to any contract or agreement (as defined below), between a Contractor and the City of Sacramento, in an amount exceeding $100,000.00. The Ordinance applies to that portion of a contractor's operations that occur: (i) within the City of Sacramento; (ii) on real property outside the City of Sacramento if the property is owned by the City or if the City has a right to occupy the property; or (iii) at any location where a significant amount of work related to a City contract is being performed.

The Ordinance does not apply: to subcontractors or subcontracts of any Contractor or contractors; to transactions entered into pursuant to cooperative purchasing agreements approved by the Sacramento City Council; to legal contracts of other governmental jurisdictions or public agencies without separate competitive bidding by the City; where the requirements of the ordinance will violate or are inconsistent with the terms or conditions of a grant, subvention or agreement with a public agency or the instructions of an authorized representative of any such agency with respect to any such grant, subvention or agreement; to permits for excavation or street construction; or to agreements for the use of City right-of-way where a contracting utility has the power of eminent domain.

DEFINITIONS

As set forth in the Ordinance, the following definitions apply:

"Contract" means an agreement for public works or improvements to be performed, or for goods or services to be purchased or grants to be provided, at the expense of the City or to be paid out of moneys deposited in the treasury or out of the trust money under the control or collected by the City. "Contract" also means a written agreement for the exclusive use ("exclusive use" means the right to use or occupy real property to the exclusion of others, other than the right reserved by the fee owner) or occupancy of real property for a term exceeding 29 days in any calendar year, whether by singular or cumulative instrument, (i) for the operation or use by others of real property owned or controlled by the City for the operation of a business, social, or other establishment or organization, including leases, concessions, franchises and easements, or (ii) for the City's use or occupancy of real property owned by others, including leases, concessions, franchises and easements.

"Contract" shall not include: a revocable at-will use or encroachment permit for the use of or encroachment on City property regardless of the ultimate duration of such permit; excavation, street construction or street use permits; agreements for the use of City right-of-way where a contracting utility has the power of eminent domain; or agreements governing the use of City property that constitute a public forum for activities that are primarily for the purpose of espousing or advocating causes or ideas and that are generally protected by the First Amendment to the United States Constitution or that are primarily recreational in nature.

“Contractor” means any person or persons, firm partnership or corporation, company, or combination thereof, that enters into a Contract with the City. “Contractor” does not include a public entity.

“Domestic Partner” means any person who has a currently registered domestic partnership with a governmental entity pursuant to state or local law authorizing the registration.

“Employee Benefits” means bereavement leave; disability, life, and other types of insurance; family medical leave; health benefits; membership or membership discounts; moving expenses; pension and retirement benefits; vacation; travel benefits; and any other benefit given to employees. “Employee benefits” shall not include benefits to the extent that the application of the requirements of this chapter to such benefits may be preempted by federal or state.

CONTRACTOR’S OBLIGATION TO PROVIDE THE CITY WITH DOCUMENTATION AND INFORMATION

Contractor shall provide the City with documentation and information verifying its compliance with the requirements of the Ordinance within ten (10) days of receipt of a request from the City. Contractors shall keep accurate payroll records, showing, for each City Contract, the employee’s name, address, Social Security number, work classification, straight time pay rate, overtime pay rate, overtime hours worked, status and exemptions, and benefits for each day and pay period that the employee works on the City Contract. Each request for payroll records shall be accompanied by an affidavit to be completed and returned by the Contractor, as stated, attesting that the information contained in the payroll records is true and correct, and that the Contractor has complied with the requirements of the Ordinance. A violation of the Ordinance or noncompliance with the requirements of the Ordinance shall constitute a breach of contract.

EMPLOYER COMPLIANCE CERTIFICATE AND NOTICE REQUIREMENTS

(a) All contractors seeking a Contract subject to the Ordinance shall submit a completed Declaration of Compliance Form (attachment “A”), signed by an authorized representative, with each proposal, bid or application. The Declaration of Compliance shall be made a part of the executed contract, and will be made available for public inspection and copying during regular business hours.

(b) The Contractor shall give each existing employee working directing on a City contract, and (at the time of hire), each new employee, a copy of the notification provided as attachment “B.”

(c) Contractor shall post, in a place visible to all employees, a copy of the notice provided as attachment “C.”

DECLARATION OF COMPLIANCE
Equal Benefits Ordinance

_____
Name of Contractor

_____
Address

The above named contractor ("Contractor") hereby declares and agrees as follows:

1. I have read and understand the Requirements of the Non-Discrimination In Employee Benefits Code (the "Requirements") provided to me by the City of Sacramento ("City") in connection with the City's request for proposals or other solicitations for the performance of services, or for the provision of commodities, under a City contract or agreement ("Contract").

2. As a condition of receiving the City Contract, I agree to fully comply with the Requirements, as well as any additional requirements that may be specified in the City's Non-Discrimination in Employee Benefits Code codified at Chapter 3. 54 of the Sacramento City Code (the "Ordinance").

3. I understand, to the extent that such benefits are not preempted or prohibited by federal or state law, employee benefits covered by the Ordinance, are any of the following:

   a. Bereavement Leave
   b. Disability, life, and other types of insurance
   c. Family medical leave
   d. Health benefits
   e. Membership or membership discounts
   f. Moving expenses
   g. Pension and retirement benefits
   h. Vacation
   i. Travel benefits
   j. Any other benefit offered to employees

   I agree that should I offer any of the above listed employee benefits, that I will offer those benefits, without discrimination between employees with spouses and employees with domestic partners, and without discrimination between the spouses and domestic partners of such employees.

4. I understand that I will not be considered to be discriminating in the provision or application of employee benefits under the following conditions or circumstances:

DECLARATION OF COMPLIANCE
Equal Benefits Ordinance

a. In the event that the actual cost of providing a benefit to a domestic partner or spouse, exceeds the cost of providing the same benefit to a spouse or domestic partner of an employee, I will not be required to provide the benefit, nor shall it be deemed discriminatory, if I require the employee to pay the monetary difference in order to provide the benefit to the domestic partner or to the spouse.

b. In the event I am unable to provide a certain benefit, despite taking reasonable measures to do so, if I provide the employee with a cash equivalent, I will not be deemed to be discriminating in the application of that benefit.

c. If I provide employee benefits neither to employee's spouses nor to employee's domestic partners.

d. If I provide employee benefits to employees on a basis unrelated to marital or domestic partner status.

e. If I submit, to the Program Coordinator, written evidence of making reasonable efforts to end discrimination in employee benefits by implementing policies which are to be enacted before the first effective date after the first open enrollment process following the date the Contract is executed with the City.

   I understand that any delay in the implementation of such policies may not exceed one (1) year from the date the Contract is executed with the City, and applies only to those employee benefits for which an open enrollment process is applicable.

f. Until administrative steps can be taken to incorporate, in the infrastructure, nondiscrimination in employee benefits

   The time allotted for these administrative steps will apply only to those employee benefits for which administrative steps are necessary and may not exceed three (3) months from the date the Contract is executed with the City.

g. Until the expiration of a current collective bargaining agreement(s) where, in fact, employee benefits are governed by a collective bargaining agreement(s).

h. I take all reasonable measures to end discrimination in employee benefits by either requesting the union(s) involved agree to reopen the agreement(s) in order for me to take whatever steps are necessary to end discrimination in employee benefits or by my ending discrimination in employee benefits without reopening the collective bargaining agreement(s).

i. In the event I cannot end discrimination in employee benefits despite taking all reasonable measures to do so, I provide a cash equivalent to eligible employees for whom employee benefits (as listed previously), are not available.

Unless otherwise authorized in writing by the City Manager, I understand this cash equivalent must begin at the time the union(s) refuse to allow the collective bargaining agreement(s) to be reopened or no longer than three (3) months from the date the Contract is executed with the City.

5. I understand that failure to comply with the provisions of Section 4. (a) through 4. (i), above, will subject me to possible suspension and/or termination of this Contract for cause; repayment of any or all of the Contract amount disbursed by the City; debarment for future contracts until all penalties and restitution have been paid in full; deemed ineligible for future contracts for up to two (2) years; the imposition of a penalty, payable to the City, in the sum of $50.00 for each employee, for each calendar day during which the employee was discriminated against in violation of the provisions of the Ordinance.

6. I understand and do hereby agree to provide each current employee and, within ten (10) days of hire, each new employee, of their rights under the Ordinance. I further agree to maintain a copy of each such letter provided, in an appropriate file for possible inspection by an authorized representative of the City. I also agree to prominently display a poster informing each employee of these rights.

7. I understand that I have the right to request an exemption to the benefit provisions of the Ordinance when such a request is submitted to the Procurement Services Division, in writing with sufficient justification for resolution, prior to contract award.

   I further understand that the City may request a waiver or exemption to the provisions or requirements of the Ordinance, when only one contractor is available to enter into a contract or agreement to occupy and use City property on terms and conditions established by the City; when sole source conditions exist for goods, services, public project or improvements and related construction services; when there are no responsive bidders to the Ordinance requirements and the
   contract is for essential goods or services; when emergency conditions with public health and safety implications exist; or when the contract is for specialized legal services if in the best interest of the City.

8. In consideration of the foregoing, I shall defend, indemnify and hold harmless, the City, its officers and employees, against any claims, actions, damages, costs (including reasonable attorney fees), or other liabilities of any kind arising from any violation of the Requirements or of the Ordinance by
   me.

DECLARATION OF COMPLIANCE
Equal Benefits Ordinance

I declare under penalty of perjury under the laws of the State of California that the foregoing is true and correct, and that I am authorized to bind the Contractor to the provisions of this Declaration.

_____ _____
Signature of Authorized Representative Date

_____
Print Name

_____
Title

YOUR RIGHTS UNDER THE CITY OF SACRAMENTO'S NON-DISCRIMINATION IN EMPLOYEE BENEFITS BY CITY CONTRACTORS ORDINANCE

On …….. (date), your employer (the "Employer") entered into a contract with the City of Sacramento (the "City") for …….. (contract details), and as a condition of that contract, agreed to abide by the requirements of the City's Non-Discrimination In Employee Benefits By City Contractors Ordinance (Sacramento City Code Section 3.54).

The Ordinance does not require the Employer to provide employee benefits. The Ordinance does require that if certain employee benefits are provided by the Employer, that those benefits be provided without discrimination between employees with spouses and employees with domestic partners, and without discrimination between the spouse or domestic partner of employees.

The Ordinance covers any employee working on the specific contract referenced above, but only for the period of time while those employees are actually working on this specific contract.

The included employee benefits are:

- Bereavement leave
- Disability, life and other types of insurance
- Family medical leave
- Health benefits
- Membership or membership discounts
- Moving expenses
- Pension and retirement benefits
- Vacation
- Travel benefits
- Any other benefits given to employees

(Employee Benefits does not include benefits that may be preempted by federal or state law.)

If you feel you have been discriminated or retaliated against by your employer in the terms and conditions of your application for employment, or in your employment, or in the application of these employee benefits, because of your status as an applicant or as an employee protected by the Ordinance, or because you reported a violation of the Ordinance, and after having exhausted all remedies with your employer,

You May . . .

- Submit a written complaint to the City of Sacramento, Contract Services Unit, containing the details of the alleged violation. The address is:

  City of Sacramento
  Contract Services Unit
  915 I St., 2nd Floor
  Sacramento, CA 95814

- Bring an action in the appropriate division of the Superior Court of the State of California against the Employer and obtain the following remedies:

  - Reinstatement, injunctive relief, compensatory damages and punitive damages

  - Reasonable attorney's fees and costs

YOUR RIGHTS UNDER THE CITY OF SACRAMENTO'S NON-DISCRIMINATION IN EMPLOYEE BENEFITS BY CITY CONTRACTORS ORDINANCE

If your employer provides employee benefits, they must be provided to those employees working on a City of Sacramento contract without discriminating between employees with spouses and employees with domestic partners.

The included employee benefits are:

- Bereavement leave
- Disability, life and other types of insurance
- Family medical leave
- Health benefits
- Membership or membership discounts
- Moving expenses
- Pension and retirement benefits
- Vacation
- Travel benefits
- Any other benefits given to employees

If you feel you have been discriminated against by your employer . . .

You May . . .

- Submit a written complaint to the City of Sacramento, Contract Services Unit, containing the details of the alleged violation. The address is:

  City of Sacramento
  Contract Services Unit
  915 I St., 2nd Floor
  Sacramento, CA 95814

- Bring an action in the appropriate division of the Superior Court of the State of California against the employer and obtain reinstatement, injunctive relief, compensatory damages, punitive damages and reasonable attorney's fees and costs.

Discrimination and Retaliation Prohibited.

If you feel you have been discriminated or retaliated against by your employer in the terms and conditions of your application for employment, or in your employment, because of your status as an applicant or as an employee protected by the Ordinance, or because you reported a violation of this Ordinance . . .

You May Also . . .

Submit a written complaint to the City of Sacramento, Contract Services Unit, at the same address, containing the details of the alleged violation.

Construction & Demolition Debris Recycling Ordinance

C&D Debris Waste Management Plan
City of Sacramento Solid Waste Services
2812 Meadowview Road, Building 1
Sacramento, CA 95832
Phone: (916) 808-4839 / Fax: (916) 808-4999
C&D@cityofsacramento.org

What is it?

The City developed the Construction & Demolition (C&D) Debris Recycling Ordinance in 2009 to divert more material away from landfills, and instead be reused and recycled. The State of California then developed a similar ordinance in 2011.

50% of all debris must be recycled if generated during the course of your project. You can either **source-separate** the material, which may be hauled by anyone, or mix them in one container and send the **mixed C&D debris** load to a **certified mixed C&D sorting facility**. Mixed C&D loads can only be hauled by a franchised hauler or self-hauled. Please see the Definitions section, on the next page, for more information.

50%
of all debris must be recycled

What is the process?

Step 1: **Waste Logs**	If you have filled out a waste management plan before, please confirm that you have submitted all of your waste logs, with copies of weight tickets, from your previous projects for which you, or your organization, is listed as the applicant. You may 1.) scan and email; 2.) mail; or 3.) drop it off. Contact information is at the top of this form.
Step 2: **Fill out WMP**	Fill out the form Construction & Demolition Waste Management Plan (WMP). A copy is in this packet. Or, you may download the Microsoft Word form from the City's Web Site at www.cityofsacramento.org/generalservices/solid-waste/CandD/. More information about this form is on the next page.
Step 3: **Submit WMP**	Submit the WMP the Solid Waste and Recycling Division, not to the Community Development Department. If the WMP is for a wrecking permit, please submit that form, too. You may 1.) scan and email; 2.) mail; or 3.) drop it off. Contact information is at the top of this form.
Step 4: **Approval**	Solid Waste staff will review the WMP submitted, and will respond with questions, if necessary. If you scan and email, and a signature is required (i.e., a wrecking permit), we will scan the signature and email it back to you. We will also include an invoice for the administration fee (see next page for more information), which is to be paid at the public counter at the Community Development Department, along with the other permit-related fees. *Fee payments are no longer accepted at Solid Waste.*
Step 5: **Waste Log** ***Due 30 days after project completion***	You, or your contractor, is to keep a log of all debris hauled away for disposal or recycling. Within 30 days of project completion, the applicant or contractor is to submit the waste log, with a copy of the weight tickets. A copy of a report from the facility receiving the debris may be used in lieu of the waste log and tickets, as long as it shows the same information. If using a certified mixed C&D recycling facility, please make sure that whoever hauls the material confirms that the facility knows the material is to be sorted for recycling, and not simply sent to a landfill. If there is no indication that the material was recycled, it won't be counted towards the 50% recycling requirement.

Construction & Demolition Debris Recycling Ordinance

C&D Debris Waste Management Plan
City of Sacramento Solid Waste Services
2812 Meadowview Road, Building 1
Sacramento, CA 95832
Phone: (916) 808-4839 / Fax: (916) 808-4999
C&D@cityofsacramento.org

What permits are covered?

Construction

- All projects with a valuation of $250,000 or more
- All new construction projects
- First tenant improvements

Demolition

All demolition, whether interior or down-to-the-ground, regardless of job valuation.

Please see the section "C&D Ordinance – What's Covered?" for more detailed list and information.

What is the fee?

Fee is 0.04% of project valuation, with a minimum of $40, and a maximum: $800.

Fee examples:

Valuation	Fee	Valuation	Fee
$50,000.00	$40.00	$1,000,000.00	$400.00
$100,000.00	$40.00	$2,000,000.00	$800.00
$150,000.00	$60.00	$3,000,000.00	$800.00

What is required on the WMP?

Building Permit Number	Only required if known. Applicants for a wrecking permit or other over-the-counter (OTC) applications do not receive the number until later. If this is the case, leave this blank.
Form submitted by	Please fill out your contact information here, so we can contact you if we have further questions about the form.
Building Project Information	Please fill all possible blanks in this form. If the contractor is not yet known, please put "TBD", then contact us once a contractor is selected.
Briefly describe the project	This may simply be "Demolition garage" or "Building new home."
How will C&D debris will be stored on the project site *	Mixed C&D: All debris (no wet garbage) into one bin Source-separated: Separated on-site by type, then hauled away in separate loads (i.e., one load of wood, another load of concrete, etc.)
Company to haul away debris *	Mixed C&D: Only the permit-holder, the waste generator (i.e., contractor), or a franchised hauler may haul away mixed C&D material. Source-separated: Anyone may haul this material away.
Facilities to receive debris *	Mixed C&D: This may be hauled to a SWA-certified Mixed C&D facility only. Source-separated: Any facility that is authorized to the material.

** The last three sections must be completed when submitting the WMP; they may not be marked "TBD".* However, if you are able change to another hauler later. Simply let Solid Waste staff know of the change, and they will update your WMP appropriately.

Please see the back of the WMP form for more definitions and notes.

Construction & Demolition Waste Management Plan

C&D Debris Waste Management Plan
City of Sacramento Solid Waste Services
2812 Meadowview Road, Building 1
Sacramento, CA 95832
Phone: (916) 808-0965 / Fax: (916) 808-4999
C&D@cityofsacramento.org

Building Permit Numbers	
	Please put all known permit numbers related to this project.
Form submitted by:	
	Please attach a business card, or put your name with a phone number and/or an email address.

This Waste Management Plan (WMP) must be submitted and approved before your building permit(s) will be issued. Only one WMP is required if a project has multiple building permits associated to it (i.e., multiple houses in a subdivision, or multiple related permits at one address). The administration fee and security deposit (if applicable) must be submitted for this form to be approved. Administration fee is 0.04% of project valuation (min $40, max $800); security deposit is 1% of valuation (max $10,000). **The accompanying Waste Log must be submitted within 30 days of final inspection (or permit expiration) of the project, or a fine may be imposed.** Approval may also be delayed if the waste log from a previous project is due.

Building Project Information:

Job Address: _____

Contractor: _____ Phone: _____

Address: _____ Email: _____

Owner: _____ Phone: _____

Address: _____ Email: _____

Briefly describe the project:

_____

_____

Materials Required to be Recycled

50% of all debris must be recycled if generated during the course of your project. You can either **source-separate** them, which may be hauled by anyone, or mix them in one container and send the **mixed C&D debris** load to a **Certified Mixed C&D Sorting Facility**. Mixed C&D loads can only be hauled by a franchised hauler or self-hauled. Please see the Definitions section, on the next page, for more information.

50%
of all debris must be recycled

Material Management

How the C&D debris will be stored on the project site: ☐ Mixed C&D ☐ Source-Separated

Company to haul away debris: _____

Facilities to receive debris: _____

Waste Log and tickets must be submitted within 30 days of permit being finaled.

Office Use Only: Received by: _____ On date: _____

☐ Logged ☐ Approved ☐ Scanned ☐ Payment Processed ☐ Filed Fee amount: $_____

Construction & Demolition Waste Management Plan

C&D Debris Waste Management Plan
City of Sacramento Solid Waste Services
2812 Meadowview Road, Building 1
Sacramento, CA 95832
Phone: (916) 808-4839 / Fax: (916) 808-4999
C&D@cityofsacramento.org

Definitions.

Please read and understand these terms. Call Solid Waste at (916) 808-0965 if these terms are not clear to you. More information is also available online at http://www.sacrecycle.org/.

1. **Self-haul or self-hauling**: This is when the permit holder, general contractor, or a subcontractor *who is doing work on the project* hauls their own waste materials for recycling or disposal. Note that a *jobsite cleanup crew is not doing other work on the project and is not self-hauling*. Jobsite cleanup crews need to be franchised in order to haul mixed C&D debris away.

2. **Franchised hauler**: See Solid Waste web site (http://www.sacrecycle.org/) for a list of these haulers. These companies are the only companies in Sacramento who can legally collect and haul mixed C&D debris for a fee.

3. **Source separation**: This is achieving compliance with the recycling requirement by keeping wood, metal, cardboard, or other recyclables in separate containers, and sending it to an authorized recycler. (A list of recyclers is on the Solid Waste web site at http://www.sacrecycle.org/.) Source-separated material may be hauled by anyone.

4. **Mixed C&D debris**: This is achieving compliance with the recycling requirement by putting all recyclable (and a small amount of unrecyclable) debris into one container. Mixed material must be sent to a certified mixed C&D sorting facility to have the recyclable material extracted and recovered. Mixed material also must be either self-hauled, or hauled by a franchised hauler. If your job site is crowded, this option saves the most space.

5. **Certified Mixed C&D Sorting Facility**: See the Solid Waste web site for a list. These facilities have been certified by the Sacramento Regional Solid Waste Authority to extract recyclable materials from mixed C&D debris. If you achieve compliance by mixed recovery, your debris must go to a certified mixed sorting facility.

Terms and Conditions

- Your approved Waste Management Plan and Waste Log must be kept on the job site in the permit folder for the duration of the project.
- City of Sacramento staff may enter the jobsite to inspect waste collection areas.
- Only SWA-Certified Mixed C&D Sorting Facilities may be used to recycle these materials if mixed with other materials.
- Only SWA-Franchised Haulers or self-haulers (as defined above) may collect and transport trash or mixed C&D material from the jobsite.
- Construction and Demolition Debris may not be burned or dumped illegally.
- Your Waste Log must be completed and submitted within 30 days of your permit being finaled or expired. All waste hauling and disposal or recycling activity must be entered on the Waste Log, including information from any subcontractors who self-hauled their own debris off-site. *Enter your Permit Number on your Waste Log now!*
- You must keep all receipts or weight-tickets from your project for a period of one year from the submittal of your waste log.
- Failure to comply with these terms and conditions may result in a fine and a security deposit on future projects.

C&D Debris Haulers & Facilities

C&D Debris Waste Management Plan
City of Sacramento Solid Waste Services
2812 Meadowview Road, Building 1
Sacramento, CA 95832
Phone: (916) 808-4833 / Fax: (916) 808-4999
C&D@cityofsacramento.org

Certified Mixed C&D Facilities

Allied Waste / Elder Creek Transfer and Recovery	(916) 387-8425
Florin-Perkins Public Disposal	(916) 443-5120
L&D Landfill	(916) 737-8640
Waste Management / K&M Recycle America	(916) 452-0142

Franchised Haulers

ACES Waste Services, Inc.	(866) 488-8837	Elk Grove Waste Management, LLC	(916) 689-4052
Allied Waste Services	(916) 631-0600	Mini Drops, Inc.	(916) 686-8785
All Waste Systems, Inc.	(916) 456-1555	Norcal Waste Services of Sacramento	(916) 381-5300
Atlas Disposal Industries, LLC	(916) 455-2800	North West Recyclers	(916) 686-8575
California Waste Recovery Systems	(916) 441-1985	Waste Management of Sacramento	(916) 387-1400
Central Valley Waste Services, Inc.	(209) 369-8274	Waste Removal & Recycling	(916) 453-1400
City of Sacramento Solid Waste	(916) 808-4839	Western Strategic Materials, Inc.	(916) 388-1076

Recyclers*

Bell Marine	(916) 442-9089
C & C Paper Recycling	(916) 920-2673
EBI Aggregates	(916) 372-7580
International Paper	(916) 371-4634
Modern Waste Solutions	(916) 447-6800
PRIDE Industries, Inc.	(916) 640-1300
Recycling Industries, Inc.	(916) 452-3961
Sacramento Local Conservation Corps	(916) 386-8394
Smurfit-Stone Container Corporation	(916) 381-3340
Southside Art Center	(916) 387-8080
Spencer Building Maintenance, Inc.	(916) 922-1900

Recovery Stations & Landfills

Elder Creek Recovery & Transfer Station	(916) 387-8425
Kiefer Landfill	(916) 875-5555
L & D Landfill	(916) 383-9420
North Area Recovery Station	(916) 875-5555
Sacramento Recycling & Transfer Station	(916) 379-0500
Waste Management Recycle America	(916) 452-0142

More updated information can be found online at:
http://www.cityofsacramento.org/utilities/

* Please note that any facility may receive source-separated recyclable materials as long as it is authorized to do so by the State of California. This is not meant to be a complete list.

Construction & Demolition Waste Log

C&D Debris Waste Management Plan
City of Sacramento Recycling and Solid Waste
2812 Meadowview Road, Building 1
Sacramento, CA 95832
Phone: (916) 808-0965 / Fax: (916) 808-4999
C&D@cityofsacramento.org

Building Permit Numbers: _____

Please put all known permit numbers related to this project.

This waste log must be submitted to Solid Waste within 30 days of the building permit being finaled (or expired). This waste log, and the supporting weight tickets, must also be kept on file for one year after project completion.

Date	Hauler	Material	Destination	Weight*

Hauler: Indicate the Franchisee, Self-Hauler, City of Sacramento, or other hauler who removed the material offsite.
Material: Indicate appropriate category: Scrap Metal, Inert Materials, Cardboard, Wooden Pallets, or Clean Wood Waste.
Destination: Indicate the facility that received the material for disposal or recycling
*** Weight**: Indicate the weight. If weight is not known, put volume. Example: “3.2 tons” – or – “10 yards”

Office Use Only: Received by: _____ On date: _____

☐ Logged ☐ Approved ☐ Scanned ☐ Filed Total Diversion: _____%

Rev. 05/06/2014

Green Contracting Survey
(Voluntary)

The City of Sacramento and the Sacramento Metropolitan Air Quality District (SMAQMD) are conducting a joint pilot project to help meet Federal Clean Air Standards for the Sacramento region.

Attached is a Green Contracting Fleet Inventory Form. Please complete the form, remove it from the bid package and return it to SMAQMD in the postage paid envelope provided with the bid package. Please do not return the Green Contracting Fleet Inventory Form to the City of Sacramento with the bid documents or otherwise.

A limited amount of funds and other financial incentives may be available to qualified contractors participating in this joint project to assist qualified contractors with upgrading and/or replacing equipment and/or trucks.

Completing and returning the Green Contracting Fleet Inventory Form is strictly voluntary.

Voluntary Green Contracting Fleet Inventory List (On-Road Equipment)

In Partnership with the City of Sacramento and the Sacramento Metropolitan Air Quality Management District

Company Name:	
Contact Name:	
Company Address:	
City, State, ZIP:	
Company Phone:	

City Bid Information	
Department	
Project #	
ESBE/SBE?	

Instructions:

a) Please enter the vehicle / equipment information for each unit used in conjunction with your City of Sacramento Bid.
b) All fields are required for both on-road heavy-duty vehicles and off-road construction equipment over 50 HP.
c) Electronic version available at http://www.airquality.org/ceqa/index.shtml
d) For additional questions, please call (916) 874-4892

Please Submit To:

Kristian Damkier, P.E.
Sacramento Metropolitan AQMD
777 12th St, 3rd Floor
Sacramento, CA 95814-1908

#	VIN	License Plate	Vehicle Information			Engine Information				Annual Usage (miles)	Received Funding
			Make	Model	Year	Make	Model	Year	HP		
(ex)	*1XP5AAC35RG339402*	*1T45678*	*Kenworth*	*T-300*	*2002*	*Cummins*	*ISB*	*2002*	*250*	*35,000*	*No*

Voluntary Green Contracting Fleet Inventory List (Off-Road Equipment)

In Partnership with the City of Sacramento and the Sacramento Metropolitan AQMD

Company Name:	
Contact Name:	
Company Address:	
City, State, ZIP:	
Company Phone:	

	City Bid Information
Department	
Project #	
ESBE/SBE?	

Instructions:

a) Please enter the vehicle / equipment information for each unit used in conjunction with your City of Sacramento Bid.
b) All fields are required for both on-road heavy-duty vehicles and off-road construction equipment over 50 HP.
c) Electronic version is available at http://www.airquality.org/ceqa/index.shtml
d) For additional questions, please call (916) 874-4892

Please Submit To:

Kristian Damkier, P.E.
Sacramento Metropolitan AQMD
777 12th St, 3rd Floor
Sacramento, CA 95814-1908

#	Equipment Serial Number	Equipment Information				Engine Information				Annual Usage (hours)
		Make	Model	Type	Year	Make	Model	Year	HP	
(ex)	*48W34456*	*Caterpillar*	*631G*	*Scraper*	*2003*	*Caterpillar*	*3408E*	*2003*	*485*	*1,600*

LOCAL BUSINESS ENTERPRISE (LBE) PARTICIPATION REQUIREMENTS

(City Contracts no Federal Funds Used)

I. LBE PARTICIPATION REQUIREMENT

On April 3, 2012, the Sacramento City Council adopted a Local Business Enterprise (LBE) Preference Program to provide enhanced opportunities for the participation of local business enterprises (LBEs) in the City's contracting and procurement activities. On November 19, 2013, City Council increased the LBE preference percentage and authorized City departments to require minimum LBE participation levels in specific contracts. Under City Code section 3.60.270, when the bid specifications for a City contract establish a minimum participation level for LBEs, no bidder on the contract shall be considered responsive unless its bid meets the minimum LBE participation level required by the bid specifications.

The City has established **a minimum 5% participation level for LBEs on this contract**. Pursuant to City Code Section 3.60.270, no bidder on this contract shall be considered responsive unless its bid meets or exceeds this minimum participation level.

Bidders shall submit proof to the City demonstrating that the business and each subcontractor, trucker, material supplier, or other business entity listed on the forms submitted are in compliance with all applicable laws relating to licensing and are not delinquent in payment of any City of Sacramento or County of Sacramento taxes, permits, or fees. Failure to submit the required LBE information may be grounds for finding the bid non-responsive.

II. LBE QUALIFICATION

A. A LBE designated in the bid must be qualified as a LBE prior to the time set for submission of bids.

B. Local Business Enterprise means a business enterprise, including but not limited to, a sole proprietorship, partnership, limited liability company, corporation, or other business entity that has a legitimate business presence in the city or unincorporated county of Sacramento. Proof of legitimate business presence in the city or unincorporated county of Sacramento shall include:

1. Having a current City of Sacramento Business Operation Tax or County of Sacramento Business License for at least twelve (12) consecutive months prior to submission of bid; and
2. Having either of the following types of offices or workspace operating legally within the city or unincorporated county of Sacramento for at least twelve (12) consecutive months prior to submission of bid:
    a. The LBE's principle business office or workspace; or
    b. The LBE's regional, branch or satellite office with at least one full time employee located in the city or unincorporated county of Sacramento.

C. A LBE must provide a physical address for the basis of location. This excludes P.O. Box addresses.

D. A LBE must provide a current copy of the City of Sacramento Business Operations Tax Certificate or County of Sacramento Business License.

III. DETERMINATION OF LBE PARTICIPATION LEVEL

A. LBE Participation: The percentage of LBE participation is determined based on the dollar value of the work to be performed or supplies to be furnished by certified LBEs designated in the bidder's Subcontractor and LBE Participation Verification Form, relative to the total dollar amount of the bid.

B. Participation Credit: To receive credit for participation:(1) an LBE subcontractor must be responsible for the execution of a distinct element of the work, must possess any license or certification required for the work, and must actually perform, manage, or supervise the work without subcontracting or otherwise shifting any portion of the work to another subcontractor; and (2) an LBE supplier must furnish materials, equipment, or supplies that the supplier sells as a recurring, although not necessarily primary, part of its business, and that are necessary for performance of the work.

C. Suppliers: Credit for an LBE supplier of materials, equipment, or supplies is counted as one hundred (100) percent of the amount paid to the supplier for the material, equipment, or supplies. To receive this credit, LBE suppliers must be listed on the bidder's Subcontractor and LBE Participation Verification Form.

D. Subcontractors (including truckers): To receive credit for an LBE subcontractor, the subcontractor must be listed on the bidder's Subcontractor and LBE Participation Verification Form.

- Truckers: Credit for an LBE trucker is counted as one hundred (100) percent of the amount paid to the trucker for trucking services, not including any amount paid to the trucker for the cost of any materials, equipment, or supplies being transported by the trucker.

IV. LBE REQUIREMENTS FOR CONTRACTOR

A. LBE Records: The Contractor shall maintain records of all subcontracts with verified LBE subcontractors and records of materials purchased from verified LBE suppliers for one (1) year after receiving final payment from the City. Such records shall show the name and business address of each LBE subcontractor or supplier and the total dollar amount actually paid each LBE subcontractor or supplier.

Not later than 30 days after completion of the work performed under the contract, a summary of these records shall be prepared, certified correct by the Contractor's authorized representative and furnished to the City. The Contractor shall provide such other information, records, reports, certifications or other documents as may

be required by City, to determine compliance with any provision of the LBE program or these specifications.

B. Performance of LBE Subcontractors and Suppliers: The LBEs listed by the Contractor shall perform the work and supply the materials, equipment, and supplies for which they are listed unless the Contractor has received prior written authorization from the City to perform the work with other forces or to obtain the material, equipment, or supplies from other sources. Reasons for requesting such authorization would include:

1. The listed LBE fails to execute a written contract based upon the general terms, conditions, plans, and specifications for the project.

2. The listed LBE becomes bankrupt or insolvent.

3. The listed LBE subcontractor fails to meet the bond requirements of the Contractor.

4. The work performed or the materials/equipment/supplies provided by the listed LBE are unsatisfactory or are not in accordance with the plans and specifications, or the listed LBE fails to perform its contractual obligations.

5. It would be in the best interest of the City.

C. Subcontractor Substitution: No substitution of an LBE subcontractor shall be made at any time without compliance with the Subletting and Subcontracting Fair Practices Act. If an LBE subcontractor is unable to perform successfully and is to be replaced, the Contractor shall make reasonable efforts to replace the original LBE subcontractor with another verified LBE subcontractor. The new LBE subcontractor must be verified at the time of substitution.

D. Reporting and Utilization Requirements and Sanctions: Failure to provide specific information, records, reports, certifications, or any other documents required for compliance with these specifications, or failure to utilize one or more LBEs in substantial compliance with the LBE utilization indicated in the Contractor's bid (unless otherwise authorized by City as provided herein, or when such failure results from changes to the work approved by the City), shall be considered a breach of the contract, and a deduction may be made from the contract amount. The deduction shall be not more than ten (10) percent of the value of the work or materials/equipment/supplies that the subject LBE(s) were listed to perform/provide in the Contractor's bid, and shall be deducted from any payment due to the Contractor. This is in addition to any deduction that may be made under any other provision of the contract, the Sacramento City Code, or State law.

E. Hearing and Review of Division Manager Decision: Prior to making a deduction pursuant to Section IV (D), above, the City shall provide written notice of the proposed deduction to the Contractor, and the Contractor may, not later than five (5) working days after receiving such notice, provide a written request to City for a hearing to contest the proposed deduction. Upon receipt of a timely written

request from the Contractor, the City shall schedule a hearing before the Division Manager (as defined in the City's Standard Specifications for Public Construction), and written notice of the date, time and location of the hearing shall be provided to the Contractor not less than five (5) working days prior to the date of the hearing. The hearing shall be conducted in the manner specified in Section 4-8 of the Standard Specifications, and the Division Manager shall prepare and forward to the Contractor a written decision as soon as practicable after the hearing. The Division Manager's decision shall be subject to review in accordance with the provisions of Section 4-9 of the Standard Specifications. Failure to request such review in compliance with the requirements set forth in Section 4-9 shall constitute acceptance of the Division Manager's decision by the Contractor.

The written notices and requests described above shall be provided by registered or certified mail (return receipt requested), by telecopy, by personal delivery, or by any other method that provides reliable evidence of the date of receipt. Written notice provided by telecopy shall be deemed received on the date that it is transmitted and transmission is confirmed by the transmitting machine. Written notice provided by personal delivery shall be deemed received on the date of delivery.

V. DEFINITIONS

A. Local Business Enterprise (LBE): A business enterprise, including but not limited to, a sole proprietorship, partnership, limited liability company, corporation, or any other business entity that has a legitimate business presence in the city or unincorporated county of Sacramento.

B. Contractor: The sole proprietorship, partnership, limited liability company, corporation, or any other business entity entering into a contract with the City of Sacramento.

C. Subcontractor: The sole proprietorship, partnership, limited liability company, corporation, or other business entity entering into a contract with the prime contractor to perform a portion of the work.

D. Supplier: The sole proprietorship, partnership, limited liability company, corporation, or other business entity to provide materials, equipment, or supplies necessary for performance of the work.

E. Proposal: Any response to a City solicitation for Proposals or Qualifications.

F. Bid: Any response to a City solicitation for bids.

LOCAL BUSINESS ENTERPRISE (LBE) PARTICPATION PROGRAM

NOTE: Proposers must provide responses to the following items. Failure to provide a response to each of the items in this section may be grounds for rejection of the proposal.

1. LBE FIVE PERCENT (5%) PARTICIPATION

On April 3, 2012, the Sacramento City Council adopted a Local Business Enterprise (LBE) Preference Program to provide enhanced opportunities for the participation of local business enterprises (LBEs) in the City's contracting and procurement activities. On November 19, 2013, City Council increased the LBE preference and authorized City departments to require minimum LBE participation levels in individual contracts. Under City Code section 3.60.270 , when the bid specifications for a City contract establish a minimum participation level for LBEs, no bidder on the contract shall be considered responsive unless its bid meets the minimum LBE participation level required by the bid specifications.

The City has established a minimum 5% participation level for LBEs on this contract. Pursuant to City Code Section 3.60.270, no bidder on this contract shall be considered responsive unless its bid meets or exceeds this minimum participation level.

Local Business Enterprise means a business enterprise, including but not limited to, a sole proprietorship, partnership, limited liability company, corporation, or other business entity that has a legitimate business presence in the city or unincorporated county of Sacramento. Evidence of legitimate business presence in the city or unincorporated county of Sacramento shall include:

1. Having a current City of Sacramento Business Operation Tax or County of Sacramento Business License; and
2. Having either of the following types of offices or workspace operating legally within the city or unincorporated county of Sacramento:
    a. The LBE's principle business office or workspace; or
    b. The LBE's regional, branch or satellite office with at least one full time employee located in the city or unincorporated county of Sacramento.

A. LOCAL BUSINESS ENTERPRISE (LBE)

Is the firm submitting the bid qualified as a local business enterprise? Check the appropriate box below:

☐ **YES** - the firm submitting the bid is qualified as a local business enterprise.

☐ **NO** - the firm submitting the bid is not qualified as a local business enterprise.

If the response to the above is YES, provide the City of Sacramento Business Operations Tax Certificate Number and/or County of Sacramento Business License Number:

_____

If the response to the above is YES, provide a current copy of the City of Sacramento Business Operations Tax Certificate and/or County of Sacramento Business License.

If the response to the above is YES, provide business office or workspace address*:

_____

_____

_____

* Address must be a physical address for the basis of location, this excludes P.O. Box addresses.

THE FOLLOWING FORMS

ARE TO BE COMPLETED AND

SIGNED ONLY IF AWARDED CONTRACT

WORKER'S COMPENSATION CERTIFICATION

In accordance with Article 5 (commencing at Section 1860), Chapter 1, Part 7, Division 2 of the Labor Code, the below certificate must be signed and filed with the awarding body prior to performing any work under this contract. Labor Code Section 3700, inter alia, states the following:

"Every employer shall secure the payment of compensation in one or more of the following ways:

"(a) By being insured against liability to pay compensation in one or more insurers duly authorized to write compensation insurance in this State.

"(b) By securing from the Director of Industrial Relations a certificate of consent to self-insure, which may be given upon furnishing proof satisfactory to the Director of Industrial Relations of ability to self-insure and to pay any compensation that may become due to his employees.

To be signed by authorized corporate officer or partner or individual submitting the Proposal. If Bidder is: (example)

1. An individual using a firm name, sign: "John Doe, an individual doing business as Blank Company."
2. An individual doing business under his own name, Sign: your name only.
3. A co-partnership, sign: "John Doe and Richard Doe, co-partners doing business as Blank Company, by, John Doe, co-partner.
4. A corporation, sign: "Blank Company, by John Doe, Secretary." (or other title)

I am aware of the provisions of Section 3700 of the Labor Code which require every employer to be insured against liability for worker's compensation or to undertake self-insurance in accordance with the provisions of that code, and I will comply with such provisions before commencing the performance of the work of this contract.

DATE: _____ Contractor _____

By _____
Signature

CITY OF SACRAMENTO

CERTIFICATE OF INSURANCE

This is to certify to the CITY OF SACRAMENTO that the insurance policies listed below have been issued to the named insured and are in force at this time.

NAMED INSURED: _____

ADDRESS: _____

DESCRIPTION OF PERMIT / CONTRACT: _____

TYPE OF INSURANCE	INSURER AND POLICY NUMBER	POLICY PERIOD	LIMITS OF LIABILITY		
				Each Occurrence	**Aggregate**
GENERAL LIABILITY ( ) General Liability ( ) Liquor Liability ( ) Contractual ( ) Products / Completed Operations ( ) Personal Injury ( ) Broad Form Property Damage			BODILY INJURY PROPERTY DAMAGE BODILY INJURY AND PROPERTY DAMAGE COMBINED DEDUCTIBLE	$ $ $ $	$ $ $ $
AUTOMOBILE LIABILITY ( ) Owned, Non-Owned and Hired Automobiles			BODILY INJURY (EACH PERSON) BODILY INJURY (EACH ACCIDENT) PROPERTY DAMAGE BODILY INJURY AND PROPERTY DAMAGE COMBINED	$ $ $ $	
UMBRELLA LIABILITY ( ) Umbrella / Excess Liability			SINGLE LIMIT SELF-INSURED RETENTION	$ $	
WORKERS' COMPENSATION ( ) Workers' Compensation and Employer Liability			EMPLOYER LIABILITY LIMIT	$	
FIRE ( ) Fire & Extended Coverage Perils			AMOUNT OF INSURANCES	$	
MISCELLANEOUS COVERAGE ( ) Aircraft Liability (including passenger injuries) ( ) Garage Keepers Liability ( ) Watercraft Liability ( ) Professional Liability			BODILY INJURY PROPERTY DAMAGE AMOUNT OF INSURANCES BODILY INJURY PROPERTY DAMAGE AMOUNT OF INSURANCES	$ $ $ $ $ $	
OTHER INSURANCE (Indicate)					

THE FOLLOWING PROVISIONS APPLY:

1 None of the above described coverage will be cancelled, reduced or non-renewed until after 30 days written notice has been given to the Risk Management Manager, City of Sacramento.

2 The City of Sacramento, its officials, agents and employees are named on all liability policies described above (except professional liability policies) as additional insureds with respect to all operations performed for the City of Sacramento by or on behalf of the named insured.

3. The above policies include a severability of interest clause.

Any liability insurance maintained by the City of Sacramento will apply only in excess of the liability insurance coverage and limits described above.

DATE ISSUED _____

AUTHORIZED REPRESENTATIVE OF INSURANCE COMPANY

_____

Signature Title

_____

Company Name

_____

Address

_____

_____

_____

Phone

AGREEMENT
(Construction Contract Over $25,000)

THIS AGREEMENT, dated for identification _____, 20__, is made and entered into between the CITY OF SACRAMENTO, a municipal corporation ("City"), and _____ ("Contractor").

The City and Contractor hereby mutually agree as follows:

1. CONTRACT DOCUMENTS

The Contract Documents, sometimes also referred to as the "Contract," consist of the following items, which are hereby incorporated by reference as if set forth in full in this Agreement:

The Notice to Contractors
The Proposal Form submitted by the Contractor
The Instructions to Bidders
The Local Business Enterprise (LBE) Requirements
The Requirements for the Non-Discrimination in Employee Benefits by City Contractors Ordinance and the Declaration of Compliance
The City's Reference Guide for Construction Contracts
The Addenda, if any
This Agreement
The Standard Specifications
The Special Provisions
The Plans and Technical Specifications
The drawings and other data and all developments thereof prepared by City pursuant to the Contract
Any modifications of any of the foregoing made or approved by City, including but not limited to duly authorized change orders.

Unless specifically noted otherwise, references to the "Standard Specifications" shall mean and refer to the Standard Specifications for Public Construction of the City of Sacramento approved by the Sacramento City Council on June 4, 2007 (Resolution No. 2007-350), and any subsequent amendments thereto approved by the Sacramento City Council or the Sacramento City Manager. Work called for in any one Contract Document and not mentioned in another is to be performed and executed as if mentioned in all Contract Documents. The table of contents, titles and headings contained in the Contract Documents are provided solely to facilitate reference to various provisions of the Contract Documents and in no way affect or limit the interpretation of the provisions to which they refer.

2. DEFINITIONS

Unless otherwise specifically provided herein, all words and phrases defined in the Standard Specifications shall have the same meaning and intent in this Agreement.

3. AGREEMENT CONTROLS

In the event of a conflict between any of the terms and conditions set forth in this Agreement and the terms and conditions set forth in other Contract Documents, the terms and conditions set forth

in this Agreement shall prevail, except that the provisions of any duly authorized change order shall prevail over any conflicting provisions of this Agreement.

4. SCOPE OF CONTRACT

Contractor agrees to furnish all tools, equipment, apparatus, facilities, labor, material and transportation necessary to perform and complete in a good and workmanlike manner to the satisfaction of City, all the Work called for in the Contract Documents entitled:

28th Street Landfill Flare Replacement

Contractor agrees to perform such Work in the manner designated in and in strict conformity with the Contract Documents.

5. CONTRACT AMOUNT AND PAYMENTS

City agrees to pay and Contractor agrees to accept, as complete payment for the above Work, in accordance with the schedule and procedures set forth in the Contract Documents and subject to deductions, withholdings and additions as specified in the Contract Documents, a total sum that shall not exceed the total bid amount set forth in Contractor's Proposal Form. In addition, subject to deductions, withholdings and additions as specified in the Contract Documents, payment for individual items of the Work shall be computed as follows:

(A) For items of the Work for which a lump sum price is specified in Contractor's Proposal Form, Contractor shall be paid the lump sum price(s) specified in Contractor's Proposal Form; and

(B) For items of the Work for which a unit price is specified in Contractor's Proposal Form, Contractor shall be paid the sum computed at such unit price, or computed at a different price if such different price is determined by City in accordance with the Standard Specifications, based on the actual amount of each such item performed and/or furnished and incorporated in the Work; provided that in no event shall the total sum for a unit price item exceed the total bid amount set forth for such item in the Contractor's Proposal Form, unless authorized by Change Order.

6. PROGRESS PAYMENTS

Subject to the terms and conditions of the Contract, City shall cause payments to be made upon demand of Contractor as follows:

(A) On or about the first of the month, the Engineer shall present to the Contractor a statement showing the amount of labor and materials incorporated in the Work through the twentieth (20) calendar day of the preceding month. After both Contractor and Engineer approve the statement in writing, and the City's labor compliance officer provides written approval, the City shall issue a certificate for ninety-five (95) percent of the amount it shall find to be due, subject to any deductions or withholdings authorized or required under the Contract or any applicable Laws or Regulations.

(B) No inaccuracy or error in said monthly estimates shall operate to release Contractor from damages arising from such Work or from enforcement of each and every provision of the

Contract Documents, and City shall have the right subsequently to correct any error made in any estimate for payment.

(C) Contractor shall not be paid for any defective or improper Work.

(D) The remaining five (5) percent of the value of the Work performed under the Contract, if unencumbered and subject to any deductions or withholdings authorized or required under the Contract or any applicable Laws or Regulations, shall be released not later than sixty (60) days after completion and final acceptance of the Work by City. Acceptance by Contractor of the final payment shall constitute a waiver of all claims against the City arising under the Contract Documents, except for disputed claims in stated amounts that the Contractor specifically reserves in writing, but only to the extent that the Contractor has complied with all procedures and requirements applicable to the presentation and processing of such claim(s) under the Contract Documents. Contractor shall be entitled to substitute securities for retention or to direct that payments of retention be made into escrow, as provided in Public Contract Code Section 22300, upon execution of the City's Escrow Agreement for Security Deposits in Lieu of Retention.

(E) The parties agree that, for purposes of the timely progress payment requirements specified in Public Contract Code Section 20104.50, the date that the City receives a statement jointly approved by the Contractor and the Engineer as provided above shall be deemed to constitute the date that City receives an undisputed and properly submitted payment request from the Contractor. Progress payments not made within 30 days after this date may be subject to payment of interest as provided in Public Contract Code Section 20104.50.

7. RETENTION OF SUMS CHARGED AGAINST CONTRACTOR

When, under the provisions of this Contract or any applicable Laws or Regulations, City is authorized or required to withhold, deduct or charge any sum of money against Contractor, City may deduct and retain the amount of such charge from the amount of the next succeeding progress estimate(s), or from any other moneys due or that may become due Contractor from City. If, on completion or termination of the Contract, sums due Contractor are insufficient to pay City's charges, City shall have the right to recover the balance from Contractor or its Sureties.

8. COMMENCEMENT AND PROSECUTION OF WORK

Contractor shall commence the Work not later than fifteen (15) working days after the date of the written Notice to Proceed from City to Contractor and shall diligently prosecute the Work to final completion. The phase "commence the Work" means to engage in a continuous program on-site including, but not limited to, site clearance, grading, dredging, land filling and the fabrications, erection, or installation of the Work. The Notice to Proceed shall be issued within fifteen (15) calendar days following execution of the Agreement by the City and the filing by Contractor of the required Bonds and proof of insurance, provided that the Engineer may delay issuance of the Notice to Proceed if the Engineer determines in the Engineer's sole discretion that conditions on the site of the Work are unsuitable for commencement of the Work. After the Notice to Proceed is issued, the continuous prosecution of Work by Contractor shall be subject only to Excusable Delays as defined in this Agreement.

9. TIME OF COMPLETION

The entire Work shall be brought to completion in the manner provided for in the Contract Documents on or before Sixty Working Days (60) from the Notice to Proceed for substantial completion and Ninety calendar days (90) for plant establishment from the date of the Notice to Proceed (hereinafter called the "Completion Date") unless extensions of time are granted in accordance with the Contract Documents.

Failure to complete the entire Work by the Completion Date and in the manner provided for in the Contract Documents shall subject Contractor to liquidated damages as provided in this Agreement. Time is and shall be of the essence in the performance of the Contract and the Work.

10. PAYMENTS DO NOT IMPLY ACCEPTANCE OF WORK

The payment of any progress payment, or the acceptance thereof by Contractor, shall not constitute acceptance of the Work or any portion thereof and shall in no way reduce the liability of Contractor to replace unsatisfactory work or material, whether or not the unsatisfactory character of such work or material was apparent or detected at the time such payment was made.

11. ACCEPTANCE NOT RELEASE

Contractor shall correct immediately any defective or imperfect work or materials that may be discovered before final acceptance of the entire Work, whether or not such defect or imperfection was previously noticed or identified by the City. The inspection of the Work, or any part thereof, shall not relieve Contractor of any of its obligations to perform satisfactory work as herein specified.

Failure or neglect on the part of City or any of its officers, employees or authorized agents to discover, identify, condemn or reject defective or imperfect work or materials shall not be construed to imply an acceptance of such work or materials, if such defect or imperfection becomes evident at any time prior to final acceptance of the entire Work, nor shall such failure or neglect be construed as barring City from enforcing Contractor's warranty(ies) or otherwise recovering damages or such a sum of money as may be required to repair or rebuild the defective or imperfect work or materials whenever City may discover the same, subject only to any statutes of limitation that may apply to any such claim.

12. CITY'S RIGHT TO TAKE POSSESSION OF THE WORK IN WHOLE OR IN PART

The City shall have the right at any time to enter upon the Work and perform work not covered by this Contract, or to occupy and use a portion of the Work, prior to the date of the final acceptance of the Work as a whole, without in any way relieving Contractor of any obligations under this Contract.

13. NO WAIVER OF REMEDIES

Neither the inspection by City, its officers, employees or agents, nor any certificate or other approval for the payment of money, nor any payment for, nor acceptance of the whole or any part of the Work by City, nor any extensions of time, nor any position taken by City, its officers, employees or its agents shall operate as a waiver of any provision of the Contract Documents nor of any power herein reserved to City or any right to damages herein provided, nor shall any waiver of any breach of this Agreement be held to be a waiver of any other or subsequent breach. All remedies provided in the Contract Documents shall be taken and construed as cumulative; in

addition to each and every other remedy herein provided, the City shall have any and all equitable and legal remedies that it would in any case have.

14. WARRANTY

Except as otherwise expressly provided in the Contract Documents, and excepting only items of routine maintenance, ordinary wear and tear and unusual abuse or neglect by City, Contractor warrants and guarantees all Work executed and all supplies, materials and devices of whatsoever nature incorporated in or attached to the Work, or otherwise provided as a part of the Work pursuant to the Contract, to be absolutely free of all defects of workmanship and materials for a period of one year after final acceptance of the entire Work by the City. Contractor shall repair or replace all work or material, together with any other work or material that may be displaced or damaged in so doing, that may prove defective in workmanship or material within this one year warranty period without expense or charge of any nature whatsoever to City.

In the event that Contractor shall fail to comply with the conditions of the foregoing warranty within ten (10) days after being notified of the defect in writing, City shall have the right, but shall not be obligated, to repair, or obtain the repair of, the defect and Contractor shall pay to City on demand all costs and expense of such repair. Notwithstanding anything herein to the contrary, in the event that any defect in workmanship or material covered by the foregoing warranty results in a condition that constitutes an immediate hazard to public health or safety, or any property interest, or any person, City shall have the right to immediately repair, or cause to be repaired, such defect, and Contractor shall pay to City on demand all costs and expense of such repair. The foregoing statement relating to hazards to health, safety or property shall be deemed to include both temporary and permanent repairs that may be required as determined in the sole discretion and judgment of City.

In addition to the above, the Contractor shall make a written assignment of all manufacturer's and other product warranties to the City, prior to completion and final acceptance of the Work by City.

The Contractor's Performance Bond shall secure the performance of the Contractor's obligations under this Section 14, and the Contractor and its Surety shall be jointly and severally liable for these obligations.

15. LIQUIDATED DAMAGES IF WORK NOT COMPLETED ON TIME

(A) The actual fact of the occurrence of damages and the actual amount of the damages that City would suffer if the entire Work, and/or any specified portion thereof, were not completed within the time(s) specified herein are dependent upon many circumstances and conditions that could prevail in various combinations, and for this reason, it is impracticable and extremely difficult to fix the actual damages. Damages that City would suffer in the event of such delay include: loss of the use of the project; expenses of prolonged assignment to the project of an architectural and/or engineering staff; prolonged costs of administration, inspection, and supervision; increased operational expenses and/or impaired operation of other facilities dependent upon completion of the project; and the loss and inconvenience suffered by the public within the City of Sacramento by reason of the delay in the completion of the project or portion thereof. Accordingly, the parties agree, and by execution of this Agreement, Contractor acknowledges that it understands and agrees, that the amount(s) set forth herein as liquidated

damages reflect the parties' best efforts at the time of entering into the Contract to estimate the damages that may be incurred by City and the public due to the Contractor's delay in completion of the Work and/or any specified portion thereof, and shall be presumed to be the amount of damages sustained by the failure of Contractor to complete the entire Work and/or any specified portion thereof within the time(s) specified herein.

(B) Contractor shall pay liquidated damages to City for failure to complete the entire Work by the Completion Date (as extended in accordance with the Contract Documents, if applicable) in the amount of $1,000.00 for each calendar day after the Completion Date (as extended in accordance with the Contract Documents, if applicable), continuing to the time at which the entire Work is completed. Such amount is the actual cash value agreed upon by the City and Contractor as the loss to City and the public resulting from Contractor's default.

The parties agree, and by execution of this Agreement, Contractor acknowledges that it understands and agrees, that the foregoing provisions provide for the imposition of liquidated damages from the Completion Date (as extended in accordance with the Contract Documents, if applicable) until the date of completion of the entire Work as determined by the Engineer in accordance with Section 8-4 of the Standard Specifications, whether or not the Work or any portion thereof is claimed or determined to be substantially complete prior to such date of completion.

(C) In the event Contractor shall become liable for liquidated damages, City, in addition to all other remedies provided by law, shall have the right to withhold any and all payments that otherwise would be or become due Contractor until the liability of Contractor under this section is finally determined. City shall have the right to use and apply such payments, in whole or in part, to reimburse City for all liquidated damages due or to become due to City. Any remaining balance of such payments shall be paid to Contractor only after discharge in full of all liability incurred by Contractor under this section or otherwise under any provision of the Contract Documents or any applicable Law or Regulation. If the sum so retained by City is not sufficient to discharge all such liabilities of Contractor, Contractor shall continue to remain liable to City until all such liabilities are satisfied in full. No failure by City to withhold any payment as specified above shall in any manner be construed to constitute a release of any such liabilities nor a waiver of the City's right to withhold payment for such liabilities.

16. INDEMNITY AND HOLD HARMLESS

(A) Contractor shall defend, hold harmless and indemnify the City, its officers, employees, and agents, and each and every one of them, from and against any and all actions, damages, costs, liabilities, claims, demands, losses, judgments, penalties, costs and expenses of every type and description, whether arising on or off the site of the Work, including, but not limited to, any fees and/or costs reasonably incurred by City's staff attorneys or outside attorneys and any fees and expenses incurred in enforcing this provision (hereafter collectively referred to as "Liabilities"), including but not limited to Liabilities arising from personal injury or death, damage to personal, real or intellectual property or the environment, contractual or other economic damages, or regulatory penalties, arising out of or in any way connected with performance of or failure to perform the Work by the Contractor, any subcontractor or agent, anyone directly or indirectly employed by any of them or anyone for whose acts any of them may be liable, whether or not (i) such Liabilities are caused in part by a party indemnified hereunder, or (ii) such Liabilities are litigated, settled or reduced to judgment; provided that the foregoing indemnity does not apply to liability for damages for

death or bodily injury to persons, injury to property, or other loss, damage or expense to the extent arising from (i) the sole negligence or willful misconduct of, or defects in design furnished by, City, its agents, servants, or independent contractors who are directly responsible to City, or (ii) the active negligence of City.

(B) The existence or acceptance by City of any of the insurance policies or coverages described in this Agreement shall not affect or limit any of City's rights under this Section 16, nor shall the limits of such insurance limit the liability of Contractor hereunder. The provisions of this Section 16 shall survive any expiration or termination of the Contract.

17. CONTRACTOR SHALL ASSUME RISKS

Until the completion and final acceptance by City of all Work under this Contract, the Work shall be under Contractor's responsible care and charge, and Contractor, at no cost to City, shall rebuild, repair, restore and make good all injuries, damages, re-erections, and repairs occasioned or rendered necessary by accidental causes of any nature, to all or any portions of the Work.

18. GENERAL LIABILITY OF CONTRACTOR

Except as otherwise herein expressly stipulated, Contractor shall perform all the Work and furnish all the labor, materials, tools, equipment, apparatus, facilities, transportation, power and light, and appliances, necessary or proper for performing and completing the Work herein required in the manner and within the time herein specified. The mention of any specific duty or liability of Contractor shall not be construed as a limitation or restriction of any general liability or duty of Contractor, and any reference to any specific duty or liability shall be construed to be solely for the purpose of explanation.

19. INSURANCE

During the entire term of this Contract and until completion and final acceptance of the Work as provided in the Contract Documents, Contractor shall maintain in full force and effect the insurance coverage described in this section.

Full compensation for all premiums that Contractor is required to pay for the insurance coverage described herein shall be included in the compensation specified for performance of the Work under the Contract. No additional compensation will be provided for Contractor's insurance premiums.

It is understood and agreed by the Contractor that its liability to the City shall not in any way be limited to or affected by the amount of insurance coverage required of or carried by the Contractor.

(A) Minimum Scope and Limits of Insurance Coverage

(1) Commercial General Liability Insurance, providing coverage at least as broad as ISO CGL Form 00 01 on an occurrence basis for bodily injury, including death, of one or more persons, property damage and personal injury, with limits of not less than one million dollars ($1,000,000) per occurrence. The policy shall provide contractual liability and products and completed operations coverage for the term of the policy.

(2) Automobile Liability Insurance providing coverage at least as broad as ISO Form CA 00 01 on an occurrence basis for bodily injury, including death, of one or more persons, property damage and personal injury, with limits of not less than one million dollars ($1,000,000) per occurrence. The policy shall provide coverage for owned, non-owned and/or hired autos as appropriate to the operations of the Contractor.

(3) Workers' Compensation Insurance with statutory limits, and Employers' Liability Insurance with limits of not less than one million dollars ($1,000,000). The Worker's Compensation policy shall include a waiver of subrogation.

(B) Additional Insured Coverage

(1) Commercial General Liability Insurance: The City, its officials, employees and volunteers shall be covered by policy terms or endorsement as additional insureds as respects general liability arising out of activities performed by or on behalf of Contractor, products and completed operations of Contractor, and premises owned, leased or used by Contractor. The general liability additional insured endorsement must be signed by an authorized representative of the insurance carrier.

If the policy includes a blanket additional insured endorsement or contractual additional insured coverage, the above signature requirement may be fulfilled by submitting that document with a signed declaration page referencing the blanket endorsement or policy form.

(2) Automobile Liability Insurance: The City, its officials, employees and volunteers shall be covered by policy terms or endorsement as additional insureds as respects auto liability.

(C) Other Insurance Provisions

The policies are to contain, or be endorsed to contain, the following provisions:

(1) Contractor's insurance coverage shall be primary insurance as respects City, its officials, employees and volunteers. Any insurance or self-insurance maintained by City, its officials, employees or volunteers shall be in excess of Contractor's insurance and shall not contribute with it.

(2) Any failure to comply with reporting provisions of the policies shall not affect coverage provided to City, its officials, employees or volunteers.

(3) Coverage shall state that Contractor's insurance shall apply separately to each insured against whom claim is made or suit is brought, except with respect to the limits of the insurer's liability.

(4) City will be provided with thirty (30) days written notice of cancellation or material change in the policy language or terms.

(D) Acceptability of Insurance

Insurance shall be placed with insurers with a Bests' rating of not less than A:V. Self-insured retentions, policy terms or other variations that do not comply with the requirements of this Section 19 must be declared to and approved by the City Risk Management Division in writing prior to execution of this Agreement.

(E) Verification of Coverage

(1) Contractor shall furnish City with certificates and required endorsements evidencing the insurance required. The certificates and endorsements shall be forwarded to the City representative designated by City. Copies of policies shall be delivered to the City on demand. Certificates of insurance shall be signed by an authorized representative of the insurance carrier.

(2) The City may withdraw its offer of contract or cancel the Contract if the certificates of insurance and endorsements required have not been provided prior to execution of this Agreement. The City may withhold payments to Contractor and/or cancel the Contract if the insurance is canceled or Contractor otherwise ceases to be insured as required herein.

(F) Subcontractors

Contractor shall require and verify that all subcontractors maintain insurance coverage that meets the minimum scope and limits of insurance coverage specified in subsection A, above.

20. FAILURE TO MAINTAIN BONDS OR INSURANCE

If, at any time during the performance of this Contract, Contractor fails to maintain any item of the bonds and/or insurance required under the Contract in full force and effect, Contractor shall immediately suspend all work under the Contract and notify City in writing of such failure. After such notice is provided, or if City discovers such failure and notifies Contractor, the City thereafter may withhold all Contract payments due or that become due until notice is received by City that such bonds and/or insurance have been restored in full force and effect and that the premiums therefor have been paid for a period satisfactory to the Division of Risk Management. Contractor shall not resume work until notified by City to do so, and the City shall have no responsibility or liability for any costs incurred by Contractor as a result of such suspension of Work.

In addition to the foregoing, any failure to maintain any item of the required bonds and/or insurance at any time during the performance of this Contract will be sufficient cause for termination of the Contract by City.

The Contractor shall be solely responsible for, and shall defend, indemnify and hold harmless the City, its officers, employees and agents against and from, any and all damages, claims, losses, actions, costs or other expenses of any kind incurred by any party as a direct or indirect result of any suspension of Work or termination of the Contract under the provisions of this Section.

21. EXCUSABLE DELAYS

For the purpose of these Contract Documents, the term "Excusable Delay" shall mean, and is limited to, delay caused directly by: acts of God; acts of a public enemy; fires; inclement weather

as determined by the Engineer; riots; insurrections; epidemics; quarantine restrictions; strikes; lockouts; sitdowns; acts of a governmental agency; priorities or privileges established for the manufacture, assemble, or allotment of materials necessary in the Work by order, decree or otherwise of the United States or by any department, bureau, commission, committee, agent, or administrator of any legally constituted public authority; changes in the Work ordered by City insofar as they necessarily require additional time in which to complete the Work; the prevention of Contractor from commencing or prosecuting the Work because of the acts of others, excepting Contractor's subcontractors or suppliers; or the prevention of Contractor from commencing or prosecuting the Work because of a Citywide failure of public utility service.

The term "Excusable Delay" shall specifically not include: (i) any delay that could have been avoided by the exercise of care, prudence, foresight and diligence on the part of Contractor; (ii) any delay in the prosecution of any part of the Work that does not constitute a Controlling Operation, whether or not such delay is unavoidable; (iii) any reasonable delay resulting from time required by City for review of any Contractor submittals and for the making of surveys, measurements and inspection; and, (iv) any delay arising from an interruption in the prosecution of the Work on account of reasonable interference by other Contractors employed by City that does not necessarily prevent the completion of the entire Work within the time specified. Excusable Delays, if any, shall operate only to extend the Completion Date (not in excess of the period of such delay as determined by City) and shall not under any circumstances increase the amount City is required to pay Contractor except as otherwise provided in these Contract Documents.

22. CONTRACTOR TO SERVE NOTICE OF DELAYS

Whenever Contractor foresees any delay in the prosecution of the Work, and in any event as soon as possible (not to exceed a period of ten (10) calendar days) after the initial occurrence of any delay that Contractor regards as or may later claim to be an Excusable Delay, the Contractor shall notify the Engineer in writing of such delay and its cause, in order that the Engineer: (i) may take immediate steps to prevent if possible the occurrence or continuance of the delay; or (ii) if this cannot be done, may determine whether the delay is to be considered excusable, how long it continues, and to what extent the prosecution and completion of the Work are delayed thereby. Said written notice shall constitute an application for an extension of time only if the notice requests such an extension and sets forth the Contractor's estimate of the additional time required together with a full description of the cause of the delay relied upon.

After the completion of any part or whole of the Work, the Engineer, in estimating the amount due Contractor, will assume that any and all delays that may have occurred in its prosecution and completion were not Excusable Delays, except for such delays for which the Contractor has provided timely written notice as required herein, and that the Engineer has found to be excusable. Contractor shall not be entitled to claim Excusable Delay for any delay for which the Contractor failed to provide such timely written notice.

23. EXTENSION OF TIME

If the Contractor complies with Section 22, above, and the Engineer finds a delay claimed by the Contractor to be an Excusable Delay, the Contractor shall be allowed an extension of time to complete the Work that is proportional to the period of Excusable Delay determined by the Engineer, subject to the approval by City of a change order granting such time extension. During a duly authorized extension for an Excusable Delay, City shall not charge liquidated damages against the Contractor for such delay.

If the City extends the time to complete the Work as provided herein, such extension shall in no way release any warranty or guarantee given by Contractor pursuant to the provisions of the Contract Documents, nor shall such extension of time relieve or release the sureties of the Bonds provided pursuant to the Contract Documents. By executing such Bonds, the Sureties shall be deemed to have expressly agreed to any such extension of time. The granting of any extension of time as provided herein shall in no way operate as a waiver on the part of City of its rights under this Contract, excepting only extension of the Completion Date for such period of Excusable Delay as may be determined by the Engineer and approved by a duly authorized change order.

24. NO PAYMENT FOR DELAYS

No damages or compensation of any kind shall be paid to Contractor or any subcontractor because of delays in the progress of the Work whether or not such delays qualify for extension of time under this Agreement; except that this provision shall not preclude the recovery of damages for a delay caused by the City that is unreasonable under the circumstances and that is not within the contemplation of the parties, provided that the Contractor timely submits all such written notice(s) and fully complies with such other procedures as may be specified in the Contract Documents or any Laws or Regulations for Contractor to claim damages for such delay.

25. CHANGES IN THE WORK

Changes in the Work authorized or directed in accordance with the Contract Documents and extensions of time of completion made necessary by reason thereof shall not in any way release any warranty or guarantee given by Contractor pursuant to the provisions of the Contract Documents, nor shall such changes in the Work relieve or release the Sureties on Bonds provided pursuant to the Contract Documents. By executing such Bonds, the Sureties shall be deemed to have expressly agreed to any such change in Work and to any extension of time made by reason thereof.

26. TERMINATION AFTER COMPLETION DATE

In addition to any other rights City may have, if any services or work required under the Contract (including but not limited to punch list items) are not completed as of the Completion Date (as adjusted by any extensions of time for Excusable Delays granted pursuant to the Contract Documents), City may terminate the Contract at any time after the Completion Date (as adjusted by any extensions of time for Excusable Delays granted pursuant to the Contract Documents), by providing a written notice to Contractor specifying the date of termination. Such notice also may specify conditions or requirements that Contractor must meet to avoid termination of the Contract on such date. If Contractor fails to fulfill all such conditions and requirements by such termination date, or, if no such conditions or requirements are specified, Contractor shall cease rendering services and performing work on such termination date, and shall not be entitled to receive any compensation for services rendered or work performed after such termination date. In the event of such termination, Contractor shall remain liable to City for liquidated damages incurred for any period of time prior to the termination date.

In addition to any other charges, withholdings or deductions authorized under the Contract or any Laws or Regulations, if City terminates the Contract pursuant to this section, City may withhold and deduct from any payment and/or retention funds otherwise due Contractor any sum necessary to pay the City's cost of completing or correcting, or contracting for the completion or correction of, any services or work under the Contract that are not completed to the satisfaction of the City

or that otherwise are deficient or require correction as of such termination date, including but not limited to incomplete punch list items. Such costs shall include all of the City's direct and indirect costs incurred to complete or correct such services or work, including the City's administrative and overhead costs. If the amount of payment(s) and/or retention funds otherwise due the Contractor are insufficient to pay such costs, City shall have the right to recover the balance of such costs from the Contractor and/or its Surety(ies).

27. TERMINATION FOR CONVENIENCE

Upon written notice to the Contractor, the City may at any time, without cause and without prejudice to any other right or remedy of the City, elect to terminate the Contract for the convenience of City. In such case, the Contractor shall be paid (without duplication of any items, and after deduction and/or withholding of any amounts authorized to be deducted or withheld by the Contract Documents or any Laws or Regulations):

(A) For Work executed in accordance with the Contract Documents prior to the effective date of termination and determined to be acceptable by the Engineer, including fair and reasonable sums for overhead and profit on such Work;

(B) For reasonable claims, costs, losses, and damages incurred in settlement of terminated contracts with subcontractors, suppliers, and others; and

(C) For reasonable expenses directly attributable to termination.

Contractor shall not be paid for any loss of anticipated profits or revenue for any Work not performed prior to termination, nor for any economic loss arising out of or resulting from such termination, except for the payments listed in this section. Contractor's warranty under Section 14 of this Agreement shall apply, and Contractor shall remain responsible for all obligations related to such warranty, with respect to all portions of the Work performed prior to the effective date of the termination for convenience pursuant to this section. The City shall be entitled to have any or all remaining Work performed by other contractors or by any other means at any time after the effective date of a termination for convenience pursuant to this section.

28. TERMINATION FOR BREACH OF CONTRACT

If Contractor abandons the Work under this Contract, or if the Contract or any portion of the Contract is sublet or assigned without the consent of the City, or if the Engineer determines in the Engineer's sole discretion that the conditions of the Contract in respect to the rate of progress of the Work are not being fulfilled or any part thereof is unnecessarily delayed, or if Contractor violates or breaches, or fails to execute in good faith, any of the terms or conditions of the Contract, or if Contractor refuses or fails to supply enough properly skilled labor or materials or refuses or fails to make prompt payment to subcontractors for material or labor, or if Contractor disregards any Laws or Regulations or proper instruction or orders of the Engineer, then, notwithstanding any provision to the contrary herein, the City may give Contractor and its Sureties written notification to immediately correct the situation or the Contract shall be terminated.

In the event that such notice is given, and, in the event such situation is not corrected, or arrangements for correction satisfactory to the City are not made, within ten (10) calendar days from the date of such notice or within such other period of time as may be specified by the City

in the notice, the Contract shall upon the expiration of said period cease and terminate. In the event of any such termination, City may take over the Work and prosecute the Work to completion, or otherwise, and the Contractor and its Sureties shall be liable to City for any cost occasioned City thereby, as hereinafter set forth.

In the event City completes the Work, or causes the Work to be completed, no payment of any kind shall be made to Contractor until the Work is complete. The cost of completing the Work, including but not limited to, extra costs of project administration and management incurred by City, both direct or indirect, shall be deducted from any sum then due, or that becomes due, to Contractor from City. If sums due to Contractor from City are less than the cost of completing the Work, Contractor and its Sureties shall pay City a sum equal to this difference on demand. In the event City completes the Work, and there is a sum remaining due to Contractor after City deducts the costs of completing the Work, then City shall pay such sum to Contractor. The Contractor and Contractor's Sureties shall be jointly and severally liable for all obligations imposed on Contractor hereunder.

No act by City before the Work is finally accepted, including, but not limited to, exercise of other rights under the Contract, actions at law or in equity, extensions of time, payments, assessments of liquidated damages, occupation or acceptance of any part of the Work, waiver of any prior breach of the Contract or failure to take action pursuant to this section upon the happening of any prior default or breach of Contractor, shall be construed to be a waiver or estoppel of the City's right to act pursuant to this Section upon any subsequent event, occurrence or failure by Contractor to fulfill the terms and conditions of the Contract. The rights of City to terminate the Contract pursuant to this Section and pursuant to Sections 26 and 27 are cumulative and are in addition to all other rights of City pursuant to the Contract and at law or in equity.

29. CONTRACTOR BANKRUPT

If Contractor should commence any bankruptcy proceeding, or if Contractor is adjudged a bankrupt, or if Contractor makes any assignment for the benefit of creditors, or if a receiver is appointed on account of Contractor's insolvency, then the City may, without prejudice to any other right or remedy, terminate the Contract and complete the work by giving notice as provided in Section 28 above.

30. SURETIES' OBLIGATIONS UPON TERMINATION

If the City terminates the Contract pursuant to Section 28 or Section 29 above:

(A) The Surety under Contractor's performance bond shall be fully responsible for all of the Contractor's remaining obligations of performance under the Contract as if the Surety were a party to the Contract, including without limitation Contractor's obligations, as provided in the Contract Documents, to complete and provide a one-year warranty of the entire Work, pay liquidated damages and indemnify, defend and hold harmless City, up to the full amount of the performance bond.

(B) The Surety under Contractor's payment bond shall be fully responsible for the performance of all of the Contractor's remaining payment obligations for work, services, equipment or materials performed or provided in connection with the Work or any portion thereof, up to the full amount of the payment bond.

31. ACCOUNTING RECORDS OF CONTRACTOR

During performance of the Contract and for a period of three (3) years after completing the entire Work, Contractor shall maintain all accounting and financial records related to the Contract and performance of the Work in accordance with generally accepted accounting practices, and shall keep and make such records available for inspection and audit by representatives of the City upon reasonable written notice.

32. USE TAX REQUIREMENTS

During the performance of this Agreement, CONTRACTOR, for itself, its assignees and successors in interest, agrees as follows:

(A) Use Tax Direct Payment Permit: For all leases and purchases of materials, equipment, supplies, or other tangible personal property used to perform the Agreement and shipped from outside California, the Contractor and any subcontractors leasing or purchasing such materials, equipment, supplies or other tangible personal property shall obtain a Use Tax Direct Payment Permit from the California State Board of Equalization ("SBE") in accordance with the applicable SBE criteria and requirements.

(B) Sellers Permit: For any construction contract and any construction subcontract in the amount of $5,000,000 or more, Contractor and the subcontractor(s) shall obtain sellers permits from the SBE and shall register the jobsite as the place of business for the purpose of allocating local sales and use tax to the City. Contractor and its subcontractors shall remit the self-accrued use tax to the SBE, and shall provide a copy of each remittance to the City.

(C) The above provisions shall apply in all instances unless prohibited by the funding source for the Agreement.

IN WITNESS WHEREOF, the parties hereto have signed this Agreement on the date set for opposite their names.

CONTRACTOR

Under penalty of perjury, I certify that the taxpayer identification number and all other information provided here are correct.

DATE _____

BY_____

_____
Print Name

_____
Title

BY_____

_____
Print Name

_____
Title

_____
Federal ID#

_____
State ID#

_____
City of Sacramento Business Operation Tax Certificate No. (City will not award contract until Certificate Number is obtained)

Type of Business Entity *(check one)*:

_____ Individual/Sole Proprietor
_____ Partnership
_____ Corporation
_____ Limited Liability Company
_____Other (*please specify:*_____)

CITY OF SACRAMENTO
a municipal corporation

DATE _____

BY _____

For: _____
City Manager

Original Approved As To Form:

_____
City Attorney

Attest:

_____
City Clerk

CITY OF SACRAMENTO
PERFORMANCE BOND

Bond No.:_____
Premium: _____

WHEREAS, the City of Sacramento, State of California, hereinafter called City, has conditionally awarded to (*here insert full name and address of Contractor*):

as principal, hereinafter called Contractor, a contract for construction of:

28th Street Landfill Flare Replacement

which contract is by reference incorporated herein and made a part hereof as if the Surety named below were a party to the contract, and is hereinafter referred to as the Contract; and

WHEREAS, under the terms of the Contract, Contractor is required to furnish a bond for the faithful performance of the Contract.

NOW, THEREFORE, we the Contractor and *(here insert full name and address of Surety)*:
_____,
a corporation duly authorized and admitted to transact business and issue surety bonds in the State of California, hereinafter called Surety, are held and firmly bound unto the City, as obligee, in the sum of:
_____**DOLLARS**
($_____), for the payment of which sum well and truly to be made, we the Contractor and Surety bind ourselves, our heirs, executors, administrators, successors and assigns, jointly and severally. The condition of this obligation is such that, if the Contractor, Contractor's heirs, executors, administrators, successors or assigns, shall in all things stand to and abide by, and well and truly keep and fully perform all covenants, conditions and agreements required to be kept and performed by Contractor in the Contract and any changes, additions or alterations made thereto, to be kept and performed at the time and in the manner therein specified, and in all respects according to their true intent and meanings, and shall indemnify and save harmless the City, its officers, employees and agents, as therein provided, then the Surety's obligations under the Contract and this bond shall be null and void; otherwise they shall be and remain in full force and effect. This obligation shall remain in full force and effect through the end of the Contract warranty period, which will expire one year after the completion of work date specified in the Notice of Completion filed for the above-named project.

As part of the obligations secured hereby and in addition to the sum specified above, there shall be included all costs, expenses and fees, including attorney's fees, reasonably incurred by City in successfully enforcing such obligations, all to be taxed as costs and included in any judgment rendered.

The Surety, for value received, hereby stipulates and agrees that no change, extension of time, alteration or addition to the terms of the Contract or to the work to be performed thereunder or to the specifications accompanying the same shall in any way affect its obligations on this bond, and it does hereby waive notice of any such change, extension, alteration or addition.

IN WITNESS WHEREOF, this instrument has been duly executed by authorized representatives of the Contractor and Surety. SIGNED AND SEALED on _____, 20_____.

_____
(Contractor) (Seal)
By _____
Title _____

ORIGINAL APPROVED AS TO FORM:

_____

City Attorney

_____
(Surety) (Seal)
By _____
Title _____

Agent name & Address _____
_____
Agent Phone # _____
Surety Phone # _____
California License # _____

CITYOF SACRAMENTO
PAYMENT BOND

Bond No.:_____
Premium: _____

WHEREAS, the City of Sacramento, in the State of California, hereinafter called City, has conditionally awarded to:

hereinafter called Contractor, a contract for construction of:

28th Street Landfill Flare Replacement

Which contract is by reference incorporated herein and made a part hereof, and is hereinafter referred to as the Contract; and

WHEREAS, under the terms of the Contract and pursuant to Chapter 5 of Title 3 of Part 6 of Division 4 of the California Civil Code (commencing with Civil Code Section 9550), Contractor is required to furnish a good and sufficient payment bond to secure payment of the claims to which reference is made in Civil Code Section 9554.

NOW, THEREFORE, we the Contractor and (*here insert full name and address of Surety*):
_____,
a corporation duly authorized and admitted to transact business and issue surety bonds in the State of California, hereinafter called Surety, are held and firmly bound unto the City, and unto all persons or entities entitled to assert a claim against a payment bond under any of the aforesaid Civil Code provisions in the sum of **_____DOLLARS ($_____),** on the condition that if Contractor shall fail to pay for any materials or equipment furnished or used in performance of the Contract, or for any work or labor thereon of any kind, or for amounts due under the Unemployment Insurance Act with respect to such work or labor, or for any amounts required to be deducted, withheld, and paid over to the Franchise Tax Board or the Employment Development Department from the wages of employees of the Contractor and all subcontractors with respect to such work or labor, then the Surety shall pay the same in an amount not exceeding the sum specified above. If suit is brought upon this bond, Surety shall pay, in addition to the above sum, all costs, expenses and fees, including attorney's fees, reasonably incurred by any party in successfully enforcing the obligation secured hereby, all to be taxed as costs and included in any judgment rendered. Should the condition of this bond be fully performed, then this obligation shall become null and void, otherwise it shall be and remain in full force and effect, and shall bind Contractor, Surety, their heirs, executors, administrators, successors and assigns, jointly and severally.

It is hereby stipulated and agreed that this bond shall inure to the benefit of all persons, companies, corporations, political subdivisions, State agencies and other entities entitled to assert a claim against a payment bond under any of the aforesaid Civil Code provisions, so as to give a right of action to them or their assigns in any suit brought upon this bond. The Surety, for value received, hereby stipulates and agrees that no change, extension of time, alteration or addition to the terms of the Contract or to the work to be performed thereunder or to the specifications accompanying the same shall in any way affect its obligations on this bond, and it does hereby waive notice of any such change, extension, alteration or addition.

IN WITNESS WHEREOF, this instrument has been duly executed by authorized representatives of the Contractor and Surety. SIGNED AND SEALED on _____, 20 _____.

_____
(Contractor) (Seal)
By _____
Title _____

ORIGINAL APPROVED AS TO FORM:

_____

City Attorney

_____
(Surety) (Seal)
By _____
Title _____

Agent name & Address _____
_____
Agent Phone # _____
Surety Phone # _____
California License # _____

CALIFORNIA LABOR CODE RELATING TO APPRENTICES ON PUBLIC WORKS PROJECTS

See following links: www.dir.ca.gov and/or www.leginfo.ca.gov

TECHNICAL SPECIFICATIONS

SCS ENGINEERS

TECHNICAL SPECIFICATIONS

FLARE REPLACEMENT
SACRAMENTO CITY LANDFILL
SACRAMENTO, CALIFORNIA

Prepared for:

City of Sacramento

Recycling and Solid Waste Division
2812 Meadowview Road
Sacramento, California 95832

Presented by:

SCS ENGINEERS

3117 Fite Circle, Suite 108
Sacramento, California 95827

April 2014
File No. 01197137.05 T106

Offices Nationwide
www.scsengineers.com

Rev. No.	Date	Description
0	4/25/14	Issued for Construction

These Technical Specifications: Flare Replacement for the Sacramento City Landfill (a.k.a., 28th Street Landfill) in Sacramento, California, dated April 2014, were prepared and reviewed by the following:

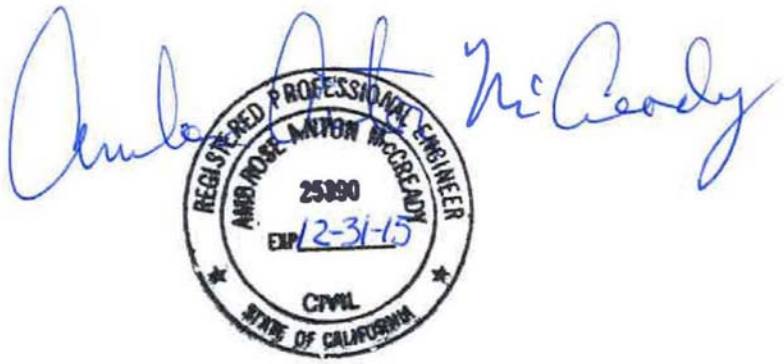

Ambrose A. McCready, P.E.
Vice President
SCS ENGINEERS

TECHNICAL SPECIFICATIONS

DIVISION 1 - GENERAL REQUIREMENTS

01010	Summary of Work
01025	Measurement and Payment
01030	Special Provisions
01050	Surveying
01092	Abbreviations
01300	Submittals
01700	Contract Closeout

DIVISION 2 - SITE WORK

02050	Demolition/Reuse – Existing BFS Components/Equipment
02220	Excavation/Trenching, Backfilling, and Compaction
02830	Chain Link Fence and Gates (as applicable)

DIVISION 3 - CONCRETE

03100	Concrete Formwork
03200	Steel Reinforcement
03300	Concrete

DIVISION 4 - MASONRY

NOT USED

DIVISION 5 - METALS

NOT USED

DIVISION 6 - WOOD AND PLASTIC

NOT USED

DIVISION 7 -THERMAL AND MOISTURE PROTECTION

NOT USED

DIVISION 8 - DOORS AND WINDOWS

NOT USED

DIVISION 9 - FINISHES

NOT USED

DIVISION 10 - SPECIALTIES

NOT USED

DIVISION 11 - EQUIPMENT

11187 Landfill Gas Flaring System

DIVISION 12 - FURNISHINGS

NOT USED

DIVISION 13 - SPECIAL CONSTRUCTION

NOT USED

DIVISION 14 - CONVEYING SYSTEMS

NOT USED

DIVISION 15 - MECHANICAL

15012 High-Density Polyethylene (HDPE) Piping
15016 Valves

DIVISION 16 - ELECTRICAL

16010 Basic Electrical Requirements
16050 Basic Materials and Methods
16110 Raceways
16120 Wires, Cables, and Connections
16450 Grounding

SECTION 01010

SUMMARY OF WORK

PART 1. GENERAL

1.01 DESCRIPTION

A. This section describes the project and work to be performed under this contract. Detailed requirements and extent of work are stated in applicable Specification sections and as shown on the Contract Drawings.

B. This section describes the project and work to be performed under this contract. Detailed requirements and extent of work are stated in applicable Specification sections and as shown on the Contract Drawings.

1.02 ORGANIZATION AND INTERPRETATION OF CONTRACT DOCUMENTS

A. Specifications and Drawings included in these Contract Documents establish the performance, quality requirements, location, and general arrangement of materials and equipment, and establish the minimum standards for quality of workmanship and appearance.

B. Specification sections have not been divided into groups for work of subcontractors or various trades. Questions concerning the applicability or interpretation of a particular section or part of section or Drawing should be directed to the Engineer.

C. Piping work shown on the Contract Drawings is intended to be a depiction and may not be an exact and complete representation of the actual finished work. The Contractor shall include fittings, pipe support, nuts, bolts, and other accessories required to provide complete and satisfactory piping system, as specified, even though some items may not be specifically shown on the Contract Drawings.

D. A part of the work that is necessary or required to make each installation satisfactory and operable for its intended purpose, even though it is not specifically included in the Specifications or on the Contract Drawings, shall be performed as incidental work as if it was described in the Specifications and shown on the Drawings.

1.03 DESCRIPTION OF WORK

A. The work for installation of a new turn-key Blower Flare System (BFS) for the existing Gas Collection and Control System (GCCS) at City of Sacramento Landfill (a.k.a. 28th Street Landfill) for the City of Sacramento (City), California, includes, but is not limited to, the following:

1. Mobilization and demobilization.

2. Surveying and staking the locations of new components for the LFG flaring system (BFS). Contractor shall survey ground elevation at each location, submit survey in-

formation to the City/Engineer in advance of work being performed under this Contract.

3. Location survey and protection of all existing above- and below-grade utilities in the work area.

4. Furnishing, trenching and installing all necessary components to depths shown on the Contract Drawings or to meet any applicable electrical or building code, including fittings, valves, etc., and backfilling and compaction.

5. Furnishing, installing, and testing, (testing if required by the City or Engineer), above-grade high-density polyethylene (HDPE) LFG connection header(s), including fittings, grading, and pipe supports and anchors.

6. Furnishing, installing and testing below-grade conduits, including existing utility clearances and protection, trenching, piping, fittings, backfill and compaction, regrading and in-kind surface restoration.

7. Furnishing, installing, and testing a skid-mounted LFG Flaring System (BFS), including existing utility clearances and protection, removal and restoration of existing surfaces, grading and compaction, reinforced concrete pads and slabs, mechanical, and electrical, controls. Testing will include performance test, as specified, and source tests as required per the Bay Area Air Quality Management District protocol.

8. Furnishing, installing, and testing air rotary screw compressor, including drive motor, starter cubical, oil system, air system, integral refrigerated dryer, electro-pneumatic control panel, air receiver tank, reinforced concrete pad, overhead cover (pole-barn) extending as shown in all directions. Service air connections with quick-disconnect, shall be provided to the BFS.

9. Grading and preparation of BFS area.

10. Chain link fencing and gates, as applicable.

11. Site electrical work. Electrical work includes new BFS, interconnection to the existing BFS, and other items included in the Contract Documents.

12. Completing all incidental related work.

13. Preparing the marked up set of drawings, reflecting as-built conditions, including surveying where necessary, and submitting to the City/Engineer.

14. Observing safety requirements at all times during construction.

15. Dust and traffic control.

16. Clean up and site restoration.

17. Provide operation and maintenance manuals for the completed BFS and components.

18. Dismantle existing blower and ancillary system components and replacement and re-activation of blower and components to a pre-determined site location. Other blower and component removal from area where said components will be placed. The Contractor shall perform the work so that downtime of the existing operational BFS is reduced to the extent possible. Coordination of this work item is imperative and Contractor shall coordinate with the City prior to completing this work item and shall provide adequate notification to the Engineer in advance of said work. Upon successful installation and testing of the BFS, the existing BFS components will be used as backup to the new BFS. Any existing equipment, ancillary component, or other that is removed or dismantled during the course of the Contract Work, shall be retained by the City for future use and be shown in the Contract Documents.

19. Interconnection of the existing BFS to the control panel of the new BFS System. Interconnection includes, but is not limited to, providing relays, electrical connections, and other ancillary components or devices to allow for temperature, flow, on/off controls, blower selection, and data logging capabilities from the existing BFS to be sent to and recorded by the Programmable Logic Controller (PLC) of the new BFS.

B. The Contractor shall furnish all labor, materials, equipment, tools, facilities, and services necessary for proper execution, testing, and completion of the work.

C. Coordinate the progress of the work, including coordination between trades, subcontractors, suppliers, and public utilities, to ensure the progress of the work.

D. It is in the interest of the Contractor that the work precedes in the most expeditious manner possible.

1.04 LIST OF DRAWINGS

The following drawings shall form part of the Contract Documents.

Sheet Number	Description
1	Title Sheet – Location Map
2	Existing Blower/Flare System Layout
3	Blower/Flare System Demolition Plan
4.	Schematic Flow Diagram
5.	LFG Blower/Flare System Plan
6.	LFG Blower/Flare Section and Details
7.	Structural Notes

8. Structural Details
9. Site Electrical Plan
10. Single Line Diagram and Load Schedule
11. Electrical Details

1.05 REFERENCE DRAWINGS

Reference drawings for de-activating and/or dismantling the existing BFS system components and connection to the existing BFS system may be obtained by the Owner (City). These shall form part of the Contract Documents.

PART 2. PRODUCTS (NOT USED)

PART 3. EXECUTION (NOT USED)

END OF SECTION

SECTION 01025

MEASUREMENT AND PAYMENT

PART 1 – GENERAL

1.1 DESCRIPTION

A. The bid items will be paid by Unit Prices. They constitute all of the labor and costs for the completion of the work.

No direct or separate payment will be made for providing miscellaneous temporary or accessory works and services, including but not limited to Contractor's field offices and sheds, surveys, job signs, sanitary requirements, testing, safety devices, submittals, water supplies, dust controls, power, maintaining traffic, removal of Contractor generated waste, watchmen, security, bonds, insurance, cleanup, and all other conditions of the Contract Documents.

B. Contractor mobilization and demobilization shall be paid for as Lump Sum and shall not exceed 5% of the total bid.

C. Record drawings, project meetings, and construction quality control shall be included in related bid items.

D. All Contractor Health and Safety provisions to perform the work will be included in related bid items.

E. Contractor Quality Control and associated testing provisions during the progression of the work will be included in the related bid items.

F. Monthly Payment Applications for Lump Sum and Unit Price Items in progress, if applicable, shall be based on labor and materials expended at the end of each month as documented by the Contractor and approved by the OWNER and/or ENGINEER, if requested by the OWNER. During the last week of the month, the Contractor is responsible for providing the Owner with records of construction that has occurred during that month. The Owner will consider the information provided by the Contractor and other information as necessary before making a determination on the percent complete on each pay item for the month.

1.2 RELATED DOCUMENTS

A. Drawings, Special Provisions, and Technical Specification Divisions 1 and 2 apply to this Section.

1.3 SUMMARY

A. This Section specifies administrative and procedural requirements for Unit Price, and Lump Sum pay items.

1. Bid prices shall be based on labor and material Unit Prices or Lump Sums and include all necessary material, overhead, profit, and applicable taxes and permit fees.

2. Refer to individual Technical Specifications sections for construction activities requiring the establishment of bid prices, as applicable.

3. The OWNER reserves the right to reject the Contractor's work-in-place until the work meets the requirements of the Drawings and Specifications.

B. The Bid Item measurement and payment descriptions for the work follow.

1. Mobilization/Demobilization (Bid Item 1)
Measurement by lump sum (LS), based on mobilizing of equipment and labor to perform work and demobilizing from and cleaning the site after all work and testing has been performed and accepted by the OWNER.

Payment as follows: 50 percent of lump sum amount upon completion of 10 percent of the work, and 50 percent for demobilization and site cleanup; Payment includes all costs for mobilizing and demobilizing equipment, living expenses, permits, bonds, insurance, office and field overhead, and any other administrative costs necessary to complete the work. Includes work described in Section 01010, 01025, 01050, 01300, and 01700. Payment will be limited to 10 percent of the total contract price.

2. Construction Surveying (Bid Item 2)
Measured by the lump sum (LS).

Payment includes all costs for construction surveying needed to perform the work shown on the Drawings and/or set forth in the Construction Specifications herein. Payment includes all costs to perform construction surveying as described in Section 01050.

3. Utility Location Surveying (Bid Item 3)
Measured by the lump sum (LS).

Payment includes all costs for associated utility location surveying needed to perform the work shown on the Drawings and/or set forth in the Construction Specifications herein. Payment includes all costs to perform associated construction surveying as described in Section 01050.

4. Above Grade HDPE Piping and Fittings (Bid Item 4)
Measured by the lump sum (LS).

Payment includes all costs for associated connection of the new Blower/Flare System (BFS) piping to the existing flare within the Blower Flare Facility (BFF) and all associated fittings and ancillary equipment to perform the work shown on the Drawings and/or set forth in the Construction Specifications herein.

5. Install new LFG Flaring System (BFS) (Bid Item 5)
Measured by the lump sum (LS).

Payment includes all costs for installation of the new Blower/Flare System, all required electrical connection, removal and restoration of existing ground surfaces, grading and compaction, reinforced concrete pads and slabs, blower skid, vertical enclosed ground flare, all controls and instrumentations, piping, valves, pipe supports, gauges, controls, lighting; complete and in place, tested and ready for use. Includes all other ancillary equipment shown on the Drawings and/or set forth in the Construction Specifications herein.

6. Inter-connection between new BFS and Existing BFS (Bid Item 6)
Measured by the lump sum (LS).

Payment includes all costs for interconnection work between the new BFS and the existing BFS, consisting of the John Zink Flare, all required below-grade electrical connections per the electrical drawings, coordination with the OWNER and Flare Equipment Provider. Payment also includes the all costs for the CONTRACTOR to provide their electrical sub for the work to the Flare Equipment Technician for a minimum of 2 days for electrical interconnection work during start-up of the new BFS. Work complete, in place and ready for use.

7. Air Rotary Screw Compressor (Bid Item 7)
Measured by the lump sum (LS).

Payment includes all costs to furnish and install the air rotary screw compressor, including drive motor, starter cubical, oil system, air system, integral refrigerated dryer, electro-pneumatic control panel, air receiver tank, reinforced concrete pad, and overhead cover. Service air connections with quick-disconnect shall be provided to the flaring system. Payment includes costs for the above and any ancillary equipment required for operation thereof; complete and in place, tested and ready for use.

8. Remove and Replace Chain Link or Other Type Fence (Bid Item 8)
Measured by the lineal foot (LF).

Payment includes all costs to remove and replace fencing, if required, to enable placement of the new BFS LFG Flaring system.

9. Site Electrical Work (Bid Item 9)
Measured by the Lump Sum (LS).

Payment includes the cost of site electrical work for new BFS System and electrical grounding for said system, including coordination with Utility Provider, complete in place, tested and ready for use. Includes any associated reconnection of reused and relocated blower equipment in other BFF area.

10. As-Built Drawings (Bid Item 10)
Measured by the Lump Sum (LS).

Payment includes the cost to prepare as-built drawings, including red-line markups, vendor As-Built Drawings, and any other affiliated information as set forth in the Contract Technical Specifications.

11. Deactivate, Dismantle, and Reuse of Existing Equipment (Bid Item 11)
Measured by the Lump Sum (LS).

Payment includes the cost to de-activate and/or dismantle existing BFS components and demolish existing concrete pads within the work area; reuse, reinstall, and re-activate blower and ancillary equipment in other BFF site location as shown on the Drawings, all electrical reassembly and removal of old components (Blowers, compressors, condensate tank, miscellaneous piping and BFS components not needed for the new system to a City designated area near site), and connection and reactivation of reused equipment; complete and in place, ready for use. Reactivation includes all necessary fittings and components (e.g., expansion couplings,

etc.) required to retrofit blower at new location. Includes grading and restoration of the dismantling work area to prepare for new concrete pads and equipment.

12. Connection and Reactivation of Existing Condensate Sump (Bid Item 12)
Measured by the Lump Sum (LS).

Payment includes the cost to connect the existing condensate sump to the new BFS System and existing condensate storage tank, activation, complete and in place, and ready for operation. Includes, all necessary electrical, pneumatic, and plumbing required to provide connectivity and be operable with the new BFS components.

13. Perform Flare Source Test (Bid Item 13)
Measured by the Lump Sum (LS).

Payment includes all costs of all work associated with performing the flare source test per SMAQMD requirements; complete as specified and directed by the Engineer. Includes Contractor notifications to the SMAQMD prior to conducting the work of the source test. Contractor notification shall be sent no less than 1 month prior to the date of new BFS start-up.

PART 2 - PRODUCTS

Not used.

PART 3 - EXECUTION

Not used.

END OF SECTION

SECTION 01030

SPECIAL PROVISIONS

PART 1. GENERAL

1.01 LFG ANALYSIS

A. Landfill gas (LFG) is approximately 50 percent methane, 50 percent carbon dioxide, and trace amounts of other gases. The gas is saturated with moisture and will support combustion.

1.02 UTILITIES

A. The Contractor is responsible for providing any temporary water, power, and sanitary facilities required at the site during the construction of the work.

B. The Contractor is responsible for locating above-ground and underground utilities and taking all necessary precautions to prevent damage or disruption to existing utility systems and hazards to the public and Contractor personnel and equipment.

1.03 ENVIRONMENTAL PROTECTION

A. The Contractor shall comply with the following:

1. Environmental Constraints:

a. Dust Control. Trucked water shall be used for dust control.

b. Odor Control. The odor control measures taken by the Contractor shall comply with the requirements of governing Agencies. Excavated materials causing odors shall be trucked to the accepting landfill. Emphasis shall be given to the reduction of any other circumstances causing odors.

c. VOC Control. The Contractor shall be responsible for mitigating the release of volatile chemicals during all Contract Work activities, including monitoring chemical concentrations to protect site residents, the public, and workers.

d. Explosion Protection. Caution shall be exercised on overnight stoppages to prevent methane accumulation. The Contractor shall be responsible for enforcing all additional explosion protection precautions according to the Guidelines prepared by SWANA Landfill Gas Division, Health and Safety Task Force.

e. Litter. The Contractor shall be required to control, collect, and truck all litter excavated or exposed by his work.

1.04 SAFETY AND PROTECTION

A. General. The Contractor is advised that the project site is an active municipal solid waste (MSW) landfill. The Contractor shall prepare and submit a site- and job-specific health and safety plan to the City in advance of the work, and be responsible for implementing those health and safety procedures during the work. General and other considerations for health and safety plans at landfills are outlined in Sections A-H below.

1. The shall comply with all federal, state, and local safety codes, ordinances, and regulations, including the requirements of the Occupational Safety and Health Administration, the Division of Industrial Safety, State of California (Cal OSHA), and other such safety measures as may be required by the above-mentioned regulatory agencies whenever any work is being done within 50 feet of a refuse-filled area.

2. Landfill gas is colorless, can be odorless, may contain hydrogen sulfide, is combustible, and contains no oxygen. Landfill gas can also migrate through soil near the landfill. The Contractor is therefore advised of the need for precautions against fire, explosion, and asphyxiation when working in or near refuse-filled areas.

3. First aid facilities conforming at least to the minimum requirements of the Occupational Safety and Health Administration shall be provided in a readily accessible location or locations.

4. The Contractor shall make all reports as required by any authority having jurisdiction and shall permit all safety inspections of the work being performed under the Contract. Before proceeding with any construction work, the Contractor shall take the necessary action to comply with all provisions for safety and accident prevention.

5. The Contractor shall be prepared to respond to potential injuries, illnesses, or situations of imminent hazard to employees or public health and safety. Personnel from the nearest, local medical facility shall be contacted in case of a medical need, and the quickest route to this facility shall be determined in advance.

B. Landfill Safety Hazards:

1. Hazards that might occur could be one or more of the following:

a. Fires may start or be started from exposed and/or confined decomposing solid waste.

b. Fires or explosions may occur in confined or enclosed spaces.

c. Landfill gases displace oxygen and may cause an oxygen deficiency in underground trenches, vaults, conduits, and structures.

d. Heavy acid gases, including hydrogen sulfide (H_2S), may be present. H_2S is a colorless, toxic, flammable gas which, in low concentrations, has an offensive odor described as that of rotten eggs. It is unlikely that hazardous concentrations of H_2S will build up except in vaults or other confined spaces. In addition, H_2S

quickly numbs the olfactory senses so that reliance upon odor can lead to a very dangerous condition and cause instant death.

e. Wildlife which could represent hazards to humans includes rattlesnakes and black widow spiders. Rodents, birds, and stray dogs should be treated as potential hazards.

2. Air quality studies consistently show that concentrations of most potentially hazardous substances (Priority Pollutants) in the ambient air on and in the vicinity of sanitary landfills are well below threshold limits. However, in confined or enclosed areas or venting sources of gas on or adjacent to landfills, dangerous concentrations of combustible and possibly toxic gases may accumulate. Oxygen depletion may also occur in these areas of confinement; therefore, planning shall be performed followed by safety procedures, which shall be continuously observed.

C. Level of Protection:

1. Three levels of protection are described as follows:

a. Level D: Coveralls, chemical-resistant boots with steel toe and shank, 5-minute escape mask and goggles.

b. Level C: A NIOSH-approved half-face air purifying respirator with acid gas/organic vapor cartridges and goggles (or safety glasses) may be worn when none to very limited accidental exposure is anticipated. Appropriate protective clothing, e.g., Tyvek suit, chemical-resistant boots with steel toe and shank, goggles, inner and outer chemical-resistant gloves, and hard hat.

OR

c. Level C: A NIOSH-approved full-face air purifying mask connected by a hose to a portable combination-type nonorganic vapor/acid gas canister with HEPA filter. Appropriate protective clothing, e.g., Tyvek suit with gloves and boots.

d. Level B: A portable, self-contained breathing apparatus with same protective clothing as mentioned above.

2. All clothing must be appropriately donned, secured, taped, and worn.

3. Based on prevailing site conditions, it is anticipated that Level D protection shall be enforced for site activities at all times. However, if higher levels of protection are necessary or anticipated, the Contractor will be compensated for the additional levels of protection; as provided by a Change Order when approved by the City/Engineer.

4. With consideration for the fact that excessive application of “level of protection” can also be a safety hazard (e.g., by causing accidents due to limitations of vision, clumsiness, and heat stress), the level of protection may be adjusted with the approval of the City/Engineer. Under no circumstances will personnel be allowed to be overexposed

beyond allowable limits. If the City/Engineer feels it is necessary to adjust the level of protection, the proper recommendations will be made.

5. Chemical cartridge respirators can be used for gaseous contaminants (not H2S) only if oxygen concentration is satisfactory and if the chemical contaminants have been identified, the concentrations are monitored, the cartridges are effective in removing the contaminants, and if the contaminants have good warning properties. If all of the above conditions cannot be satisfied, a special auxiliary plan is required. Air purifying respirators will not be used for protection in environments containing constituents which have poor warning properties and which are near, at, or above, or can reasonably be expected to be near, at, or above the threshold limit value. Initial characterization in conjunction with continuous monitoring of total hydrocarbons in ppm as methane can be used to monitor conditions to ensure dangerous levels are not reached. Written records of monitoring should be maintained.

6. Self-contained breathing apparatus or supplied-air masks shall be used when entering areas containing oxygen deficient atmospheres, unknown atmospheres, or atmospheres considered to be at or above Immediately Dangerous to Life and Health (IDLH) levels (as declared and published by NIOSH). Under no circumstances should any worker ever inhale raw, undiluted landfill gas.

7. The length of time a canister or cartridge is effective in removing hazardous material from the ambient air will depend on the concentration of hazardous material in the air and the level of effort required for a worker to accomplish his assigned tasks. The higher the breathing rate, the more frequently canisters will need to be replaced. These maximum operating periods vary according to manufacturer, so it will be necessary to monitor the total usage of cartridges and canisters during all work requiring a respirator. Monitoring will be the responsibility of the Contractor.

8. The cartridges or respirators chosen will be rated for the removal of both organic vapors and acid gases. The type of respirator recommended has been based on an 8-hour day for each worker at the site. Disposable clothing, if worn, shall be worn only once and then securely bagged in plastic and placed in a trash receptacle. Under no circumstances shall workers be permitted to wear the disposable clothing or rubber boots off site.

D. Planning:

1. The address, telephone number, and location map of the local hospital and medical emergency room shall be prominently posted. In addition, the telephone number of ambulance and fire department/rescue units shall be posted.

2. Fires or explosions in confined areas are caused by a source of ignition. Smoking shall be strictly forbidden. Nonsparking and/or explosion-proof tools shall be used in vaults, trenches, or other enclosed areas. Positive ventilation is required in construction shacks or other structures on or near a landfill. Temporary structures on the landfill surface shall be constructed on supports with a ventilated area under the main floor.

E. General Requirements:

1. The Contractor shall assign a site Safety Officer during the course of the work. The site Safety Officer shall conduct safety orientation and instruction at all meetings with all workers prior to the start of operations. This person shall be trained in the use of all of the recommended safety equipment. The workers shall be advised concerning the kind and degree of hazard associated with the operations and the safety precautions required. Any persons employed after the initiation of operations shall also be oriented and instructed on said safety hazards and precautions.

2. Smoking or open flames shall be prohibited within the site construction area (Work Area) or as directed by the City/Engineer.

3. No worker shall be allowed to work alone at any time in or immediately near trenching/excavation areas. Another worker shall be present at the site, but shall maintain a safe distance to preclude possible adverse impacts from landfill gas or potential cave-ins.

4. Periodically during construction, the work area shall be monitored for levels of methane and hydrogen sulfide with results recorded and available for review by the City/Engineer.

5. No worker shall handle excavated refuse, if present, without wearing work gloves.

6. Construction equipment shall be equipped with a vertical exhaust at least 5 feet above grade and/or with spark arrestors.

7. Motors utilized in the excavation/trenching area(s) shall be explosion-proof.

8. No welding shall be permitted in or within 50 feet of an excavation/trench area or as directed by the City/Engineer.

9. All personnel must wear hard hats.

10. A minimum of two fire extinguishers of the 50-pound dry chemical type shall be maintained or kept within easy access of working area.

11. Startup and shutdown of equipment shall not be done in areas of exposed refuse.

12. In addition to conforming to the safety rules and regulations of governmental authorities having jurisdiction, the Contractor is advised of the presence of methane gas emanating from the natural decomposition of refuse buried at or near the work area and shall take precautions to ensure the safety of workers and the public.

13. The Contractor shall demonstrate to the City/Engineer on a daily basis that all safety equipment is functioning properly, that all monitoring instruments are calibrated, and that the instrument operators are sufficiently knowledgeable in the use of the safety equipment.

14. A copy of the safety plan shall be posted at the job-site (work area). Scheduled meetings shall be held to review the safety program.

15. The Contractor shall adequately identify and guard all hazardous areas and conditions by visual warning devices and, where necessary, physical barriers. Such devices shall, at a minimum, conform to the requirements of Cal OSHA.

16. No excavation or trench greater than 12 inches deep shall be left open overnight unless securely covered with a steel plate of sufficient size to prevent access to the hole/excavation and sufficient thickness to support expected loads. The plate shall be weighted down to discourage removal by unauthorized persons. The edges of the plate shall be covered with a sufficient quantity of soil to prevent gas from escaping. Barricades shall be placed around the covered hole/excavation outside the range of possible cave-in.

F. Safety Equipment:

1. Prior to commencement of the construction of any work item under the Contract, the Contractor shall provide the following equipment:

   a. Hard hats, work gloves, coveralls, and chemical-resistant boots with steel-toe and shank for all personnel.

   b. First aid kit, eye wash station, stretcher, and blankets.

   c. Two fire extinguishers, 50-pound dry chemical-type.

   d. No smoking signs.

   e. Air purifying respirators (with acid gas/organic vapor cartridge) for each worker and observer with replacement cartridges which fit the respirator.

   f. Two parachute-type harnesses and safety lines (as applicable).

   g. Methane/oxygen indicator.

   h. Hydrogen sulfide indicator.

   i. Barricades.

   j. Ladders.

   k. Clean water, soap, and paper towels.

G. Procedures for Trenching and Pipe Installation

1. Contractor shall submit to the City/Engineer, in advance of the excavation of any trench or trenches 4 feet or more in depth, detailed plans showing the design of shoring, bracing, sloping, or other provisions to be made for worker protection from the hazard of caving ground during excavation of such trench or trenches. The plans

shall be prepared and signed by a registered civil or structural engineer, and shall comply with the shoring system standards set forth in the Construction Safety Orders in Article 6, Chapter 4, Subchapter 4, Title 8 of the California Code of Regulations. Shoring, bracing, sloping, or other protective systems shall not be less effective than the ones required by the California Construction Safety Orders.

2. Safe and suitable ladders, which project 2 feet over the top of the trench, shall be provided for all trenches over 5 feet in depth. A minimum of one ladder shall be provided for every 100 feet of open trench or fraction thereof and shall be located so that workmen in the trench need not move more than 50 feet to a ladder.

3. All persons working near the edge of the excavations shall be secured with a safety belt and life line for protection from caving. No more than 4 feet of slack shall be allowed in the tether line.

4. Solvent cleaning, gluing, bonding, and/or welding pipe shall be performed outside the excavation whenever possible. Forced ventilation shall be provided when such work is performed in a trench deeper than 3 feet.

5. The construction of piping trench, which exposes landfill trash to the atmosphere, shall be staged such that no more than 100 linear feet of trench is exposed at any time prior to backfilling. The trenches shall not be left open overnight or when work is not in progress.

1.05 SITE CONDITIONS

A. The Contractor shall be responsible for having determined to his satisfaction, prior to the submission of his bid, the nature and location of the work, the conformation of the ground, the character and quality of the landfill, the type and quantity of materials to be encountered, the character of equipment and facilities needed preliminary to and during the execution of the work, the general and local conditions, and all other matters which can in any way affect the work under this Contract. The prices established for the work to be done will reflect all costs pertaining to the work. Any claims for extras based on landfill or groundwater table conditions will not be allowed.

PART 2 PRODUCTS (NOT USED)

PART 3. EXECUTION (NOT USED).

END OF SECTION

SECTION 01050

SURVEYING

PART 1 – GENERAL

1.1 SUMMARY

This section includes the requirements for surveying, field engineering, and record documents.

1.2 CONTRACTOR'S SURVEYOR

A. The Contractor shall separately contract with a surveyor licensed in the State of California to provide field engineering and surveying services as required for layout and construction of the project and to provide as-built Drawings of the completed project. The Surveyor shall:

- locate existing features,
- verify existing grades,
- provide construction stake out,
- create final Record Drawings (as-builts),
- provide survey base maps for Record Drawings.

1.3 CONTRACTOR SUBMITTALS

The Contractor shall submit the following items to the OWNER for review:

A. Project Record Documents: Upon substantial completion of the Work, deliver record documents to Owner. Final payments will not be made until satisfactory record documents are received by OWNER. Accompany record documents with transmittal letter containing:

1. Date.
2. Project title and number.
3. Contractor's name and address.
4. Title and number of each record document.
5. Certification that each document as submitted is complete and accurate.
6. Signature of Contractor, or its authorized representative.

1.4 WEEKLY INSPECTIONS

To verify the Contractor's monthly progress payment requests, the following items shall be made available for monthly inspection by the CQA Officer:

A. Record Documents.

B. Updated construction schedules using Microsoft Project on a CD ROM, if required by the Owner.

1.5 SITE CONDITIONS

A. Existing Grades: The Contract Drawings depict surface elevations within the work area [Blower Flare Facility (BFF)] upon commencing the work described in the Contract Documents.

B. Existing Features: Contractor is required to field-verify the location of existing features, and at points of connection or tie-in to the work. The OWNER's record drawings are available to the Contractor. The existence and location of features are not guaranteed. Before beginning site work, investigate and verify the existence and location of underground utilities and existing features. The OWNER and the ENGINEER take no responsibility for the accuracy of these record drawings implied or otherwise.

C. Field Verification: Prior to construction, coordinate with OWNER or their ENGINEER to verify the elevations of existing features of the BFF and at points of connection or tie-in to the Work.

D. Discrepancies: Should the Contractor discover any discrepancy between actual conditions and those indicated which prevent following good practice or the intent of the Drawings and Specifications, he/she shall notify the Owner or their authorized representative in writing and request clarification and instructions on how to proceed. The Contractor shall not proceed with work without advance approval from OWNER.

E. No Additional Payment: No claims shall be made for extra payment or extensions of Contract completion time if the Contractor fails to notify the OWNER of any discrepancy before proceeding with that part of the Work.

PART 2 - PRODUCTS

Not used.

PART 3 - EXECUTION

3.1 QUALIFICATIONS OF SURVEYOR

The Contractor shall arrange for the services of a State of California licensed land surveyor.

3.2 FIELD SURVEY WORK

A. Control Points: The OWNER will provide drawings with control point data for locations shown on the Contract Drawings to the Contractor.

B. Benchmarks: The Contractor shall establish and maintain a minimum of two permanent benchmarks on the site, referenced to data established by survey control points. Record benchmark locations including horizontal and vertical data on Project Record Documents. Do not change or relocate benchmarks or control points without prior written approval by the Owner. Promptly report lost or destroyed benchmarks and central points or requirements to relocate benchmarks and central points because of necessary changes in grades or locations, as applicable.

C. Site Improvements: The Contractor shall work from lines and levels established by benchmarks and control points to set lines and levels as needed to properly locate each element of the Project. Locate and lay out site improvements, including stakes for slopes, grading, fill placement, drainage controls, and pipe invert elevations. Calculate and measure required dimensions within indicated or recognized tolerances. Do not scale Drawings to determine dimensions.

.

D. Relocation of Existing Utilities: The Contractor shall furnish information necessary to adjust, move, or relocate existing features, structures, services or other appurtenances located in, or affected by the work, if they exist. Coordinate with the City, OWNER, and local authorities having jurisdiction.

3.3 TOLERANCES

A. Inside the BFF: Within the facility, minimum and maximum slope requirements shown on the Drawings and specified herein must be observed at all times. Slopes and tolerances shall be constructed as indicated.

1. Horizontal and vertical survey tolerances shall be 1.0 feet and 0.1 feet,

respectively.

B. Positive Drainage: Within the limits of the project area, provide positive drainage towards permanent drainage ways, to extent possible. All areas shall be graded to the minimum slopes indicated. No ponding areas are permitted.

3.4 RECORD DOCUMENTS

A. General: Protect new record documentation from deterioration and loss in a secure, fire-resistive location; provide access to record documents for the Owner's reference during normal working hours. Electronic documents shall be backed-up at least once per week.

B. Recording

1. Label and file record documents and samples in accordance with Specification Section number listings in Table of Contents of this Technical Specification. Label each document "PROJECT RECORD" in neat, large, printed letters.

2. Preparation of project record documents shall be by personnel skilled as a draftsman competent to prepare the required drawings.

3. Record and update daily record information from field notes, on set of blue line prints, and this specification.

4. Record information concurrently (daily) with construction progress. Do not conceal work until required information is recorded.

5. Record deviations from required lines and levels, and advise the ENGINEER and CQA Officer when deviations that exceed indicated or recognized tolerances are detected. On Project Record Drawings, record deviations that are accepted and not corrected.

C. Record Drawings: Maintain a clean, undamaged set of blue or black line white-prints of Contract Drawings and Shop Drawings. Mark the set to show the actual installation where the installation varies substantially from the work as originally shown. Mark whichever drawing is most capable of showing conditions fully and accurately; where Shop Drawings are used, record a cross-reference at the corresponding location on the Contract Drawings. Give particular attention to concealed or below-grade elements that would be difficult to measure and record at a later date.

Mark record sets with red erasable pencil. Mark new information that is important to the Owner, but was not shown on Contract Drawings or Shop Drawings. Note related Change Order numbers where applicable. Organize

record drawing sheets into manageable sets, bind with durable paper cover sheets, and print suitable titles, dates, and other identification on the cover of each set. Legibly mark each item to record actual construction, including:

1. Measured horizontal and vertical locations of underground utilities, drain pipe and appurtenances, referenced to permanent surface improvements.
2. Measured locations of internal utilities, and appurtenances concealed in construction, referenced to visible and accessible features of construction.
3. Field changes (dimensions and detail).
4. Changes by Modifications made by the CQA Officer or Owner.
5. Details not on original Contract Drawings.
6. References to related Shop Drawings and Modifications.
7. Depths of various elements of the Work in relation to datum.
8. Record Specifications: Maintain one complete copy of the Specifications, including addenda and one copy of other written construction documents such as Change Orders and Field Order issued in printed form during construction. Mark these documents to show substantial variations in actual work performed in comparison with the text of the Specifications, Change Order, and Field Order. Give particular attention to substitutions, selection of options and similar information on elements that are concealed or cannot otherwise be readily discerned later by direct observation. Note related record drawing information and product data. Legibly mark up each Section to record:

    a. Manufacturer, trade name, catalog number, and supplier of each product and item of equipment actually installed.

    b. Changes made by Change Order or Field Order.

    c. Other matters not originally specified.

PART 4 - MEASUREMENT AND PAYMENT

Measurement and payment will be made for surveying under Bid Item No. 2 – Construction Surveying.

END OF SECTION

SECTION 01092

ABBREVIATIONS

PART 1. GENERAL

1.01 SUMMARY

A. This section lists many of the construction industry organizations, professional and technical associations, societies and institutes, and government agencies issuing, promoting, or enforcing standards to which references may be made in the Contract Documents, along with the abbreviations commonly used for those references. Also included are certain general requirements for the use of industry standards specified, and for application of the standards in quality control.

1.02 USE OF REFERENCE STANDARDS

A. Work specified by reference to the published standard or specification of a government agency, technical association, trade association, professional society or institute, testing agency, or other organization shall conform to or surpass the minimum standards of quality for materials and workmanship established by the designated standard or specification.

B. Where so specified, products or workmanship shall also conform to the additional prescriptive or performance requirements included within the Contract Documents to establish a higher or more stringent standard of quality than that required by the referenced standard.

C. Where the specific date or issue of the standard is not included with the reference to the standard, the latest edition, including all amendments published and available, shall apply.

D. Where two or more standards are specified to establish quality, the product and workmanship shall conform to or surpass the requirements of both.

E. In case of conflict between referenced standards, the more stringent shall apply.

F. Where both a standard and a brand name are specified for a product in the Contract Documents, the proprietary product named shall conform to or surpass the requirements of the specified reference standard. The listing of a trade name in a Contract Document shall not be construed as warranting that such product conforms to the respective reference standard.

G. Copies of standards:

1. Copies of applicable referenced standards have not been bound in this Contract Document.

2. Where copies of standards are needed by the Contractor for superintendence and quality control of the work, obtain a copy or copies directly from the publication source and maintain in an orderly manner at the job-site, available to the Contractor's personnel, subcontractors, City, and Engineer.

3. Submittals. Submit for approval the requests to use products conforming to printed standards or publications with a different publication date from that effective under the Contract. Clearly indicate the changes in product or workmanship quality involved in the proposed change, if any, and reasons for the request.

1.03 ABBREVIATIONS

A. Abbreviations for Trade Organizations and Government Agencies. The following is a list of construction industry organizations and government agencies to which references may be made in the Contract Documents with abbreviations used.

AA	Aluminum Association
AAMA	American Architectural Manufacturers' Association
AAMA	Architectural Aluminum Manufacturers' Association
AASHTO	American Association of State Highway and Transportation Officials
ACI	American Concrete Institute
AFBMA	Anti-friction Bearing Manufacturers' Association
AGA	American Gas Association
AGMA	American Gear Manufacturers' Association
AISC	American Institute of Steel Construction
AISI	American Iron and Steel Institute
AITC	American Institute of Timber Construction
ALS	American Lumber Standards
AMCA	Air Moving and Conditioning Association, Inc.
ANSI	American National Standards Institute
APA	American Plywood Association
API	American Petroleum Institute
AREA	American Railroad Engineering Association
ARI	Air Conditioning and Refrigeration Institute
ASAE	American Society of Agricultural Engineers
ASCE	American Society of Civil Engineers

ASHRAE	American Society of Heating, Refrigerating and Air Conditioning Engineers
ASME	American Society of Mechanical Engineers
ASTM	American Society for Testing and Materials
AWI	Architectural Woodwork Institute
AWPA	American Wood Preservation Association
AWPB	American Wood Preservers' Bureau
AWPI	American Wood Preservers' Institute
AWS	American Welding Society
AWWA	American Water Works Association
BFS	Blower/Flare System
BHMA	Builders Hardware Manufacturers' Association
CBMA	Certified Ballast Manufacturers' Association
CDA	Copper Development Association
CGA	Compressed Gas Association
CISPI	Cast Iron Soil Pipe Institute
CMAA	Crane Manufacturers' Association of American
City	City of Sacramento Utilities Department (Owner)
CRSI	Concrete Reinforcing Steel Institute
FGMA	Flat Glass Marketing Association
FM	Factory Mutual
Fed. Spec.	Federal Specifications
FS	Federal Specifications
GA	Gypsum Association
GCCS	Gas Collection and Control System
HI	Hydraulic Institute
HMI	Hoist Manufacturers' Institute
ICBO	International Conference of Building Officials
ICEA	Insulated Cable Engineers' Association
IDLH	Immediately Dangerous to Life and Health

IEEE	Institute of Electrical and Electronics Engineers
IES	Illuminating Engineering Society
ISA	Instrumental Society of America
JIC	Joint Industry Conferences of Hydraulic Manufacturers
MIA	Marble Institute of America
Mil. Sp.	Military Specifications
MS	Military Specifications
MMA	Monorail Manufacturers' Association
NAAMM	National Association of Architectural Metal Manufacturers
NBHA	National Builders' Hardware Association
NEC	National Electrical Code
NEMA	National Electrical Manufacturers Association
NESC	National Electric Safety Code
NFPA	National Fire Protection Association
NHLA	National Hardwood Lumber Association
NIOSH	National Institute of Occupational Safety and Health
NLMA	National Lumber Manufacturers' Association
NTMA	National Terrazzo and Mosaic Association
NWMA	National Woodwork Manufacturers' Association
OECI	Overhead Electrical Crane Institute
OSHA	Occupational Safety and Health Administration (both Federal and State)
PEI	Porcelain Enamel Institute
PS	Product Standards Section - U.S. Department of Commerce
RLM	RLM Standards Institute, Inc.
RMA	Rubber Manufacturers Association
SAE	Society of Automotive Engineers
SDI	Steel Deck Institute
SDI	Steel Door Institute
SIGMA	Sealed Insulating Glass Manufacturing Association

SJI	Steel Joist Institute
SMACNA	Sheet Metal and Air Conditioning Contractors National Association
SMAQMD	Sacramento Metropolitan Air Quality Management District
SSPC	Steel Structures Painting Council
SWANA	Solid Waste Association of North America
SWI	Steel Window Institute
TCA	Title Council of America TEMA Tubular Exchanger Manufacturers' Association
UBC	Uniform Building Code
UL	Underwriters' Laboratories
VOC	Volatile Organic Compounds
VFD	Variable Frequency Drive
WCLIB	West Coast Lumber Inspection Bureau
WWPA	Western Wood Products Association

PART 2. PRODUCTS (NOT USED)

PART 3. EXECUTION (NOT USED)

END OF SECTION

SECTION 01300

SUBMITTALS

PART 1. GENERAL

1.01 DESCRIPTION

A. Work Included:

1. The work described in this section consists of requirements and procedures necessary for scheduling, preparation, and submission of submittals.

1.02 RELATED WORK SPECIFIED ELSEWHERE

A. Individual Specification sections in these Contract Documents contain additional and special submittal requirements. Individual sections shall take precedence in the event of a conflict with this section.

1.03 SUBMITTAL PROCEDURES

A. The City reserves the right to modify the procedures and requirements for submittals, as necessary, to accomplish the specific purpose of each submittal. Direct inquiries to the City regarding the procedure, purpose, or extent of any submittal.

B. Review, acceptance, or approval of substitutions, schedules, Shop Drawings, lists of materials, and procedures submitted or requested by Contractor shall not add to the Contract amount, and additional costs, which may result therefrom, shall be solely the obligation of Contractor.

C. The City/Engineer is not precluded, by virtue of review, acceptance, or approval, from obtaining a credit for construction savings resulting from allowed concessions in the work or materials therefor.

D. The City/Engineer is not responsible for providing engineering or other services to protect Contractor from additional costs accruing from submittals.

E. Submittals processed by City/Engineer do not become Contract Documents and are not Change Orders; the purpose of submittal review is to establish a reporting procedure and is intended for Contractor's convenience in organizing the work and to permit City/Engineer to monitor Contractor's progress and understanding of the design.

F. Delays caused by the need for resubmittal shall not constitute basis for claim.

1.04 ADMINISTRATIVE SUBMITTALS

A. Provide administrative submittals required by the Bidding Requirements, General Conditions, Supplementary Conditions, and as might be specifically required in other parts of the Contract Documents.

B. Make required submittals promptly to the applicable federal, state, or local agency, as required by law. Failure to comply with this requirement may result in withholding of progress payments and make Contractor liable for other prescribed action and sanctions.

C. Submit to the City a copy of letters relative to the Contract including notifications, reports, certifications, payrolls, and the like, that are submitted directly to a federal, state, or other governing agency.

1.05 SCHEDULES

A. General:

1. Submit estimated progress schedule, phases of project execution, and preliminary schedule of submittals in duplicate to City/Engineer.

2. Revise and resubmit as specified, and identify all changes made from previous schedule submittal.

B. Schedule of Submittals:

1. Preliminary Schedule of Submittals. Indicate submittals required by Specification section number with brief description, starting and completion dates for respective submittal preparation, and submittal review by City/Engineer. Contractor shall submit its Preliminary Schedule of Submittals at least 5 working days prior to the Pre-construction Conference.

2. Finalized Schedule of Submittals. Furnish sub-network to the progress schedule indicating respective progress schedule activity, which sequentially follows the submittal activity. Contractor shall submit its Finalized Schedule of Submittals prior to pre-construction conference.

3. Deviation from the Contract. If the submittals show any deviations from the Contract requirements, the Contractor shall submit with the submittal submission, a separate written description of such deviations and the reasons therefore. If the City accepts such deviation, the City shall issue an appropriate Contract Change Order, except that, if the deviation is minor, or does not involve a change in price or in time of performance, a Change Order need not be issued. If any deviations from the Contract requirements are not noted on the submittal, the review of the shop drawing shall not constitute acceptance of such deviations.

C. Schedule of Values. The Contractor shall submit its finalized Schedule of Values to the City/Engineer for review and approval within 10 working days after the Execution of Contract.

1. Revise schedule to list change orders for each Application for Payment

D. CONSTRUCTION PROGRESS SCHEDULES

1. Submit construction progress schedule with separate item for each major trade and operation, identifying first day of each week.

a. Show complete sequence of construction by activity, identifying work of separate stages and logically grouped activities.

b. Show projected percentage of completion for each item of Work as of time of each progress Application for Payment.

c. "Submittal Schedule": Show Contractor submittal dates required for shop drawings, product data, and samples, and product delivery dates; deliver to City/Engineer per approved "Submittal Schedule."

i. "Submittal Schedule" may be incorporated into construction progress schedule or may be separate, Contractor option.

ii. City/Engineer Review Period: City/Engineer will be expedient in review; however, Contractor shall schedule submittals recognizing possibility City/Engineers may reject and may require resubmittal.

iii. Contract extension shall not be allowed for Contractor's failure to properly schedule submittals to allow for City/Engineer requiring resubmittal.

1.06 SHOP DRAWINGS

A. General:

1. Shop Drawings, as defined herein, consist of all drawings, diagrams, illustrations, schedules, and other data which are specifically prepared by or for the Contractor to illustrate some portion of the work; and all illustrations, brochures, standard schedules, performance charts, instructions, diagrams, and other information prepared by a manufacturer and submitted by the Contractor to illustrate material or equipment for distinct portions of the work.

2. Submittal of incomplete or unchecked Shop Drawings will not be acceptable. Shop Drawing submittals, which do not clearly show Contractor’s review, stamp or specific written indication of Contractor review, will be returned to Contractor for resubmission.

3. Submittal of Shop Drawings not required under these Contract Documents and not shown on the schedule of submittals will be returned to the Contractor unreviewed and unstamped by the City/Engineer.

B. Procedures:

1. Submit to City/Engineer for review and approval, in accordance with the accepted schedule of submittals, six (6) copies of Shop Drawings.

2. Transmit each submittal on City/Engineer-accepted form.

3. Sequentially number the transmittal forms; resubmittals to have original number with an alphabetic suffix.

4. Identify project, Contractor, Specification section number, pertinent drawing sheet and detail number(s), products, units and assemblies, and the system or equipment identification or tag number as shown.

5. Apply Contractor's stamp, signed or initialed certifying that review, verification of products required, field dimensions, adjacent construction work, and coordination of information, are in accordance with the requirements of the Contract Documents.

6. Provide space for Engineer review stamps, 2-1/2 inches by 3-1/2 inches.

7. Revise and resubmit submittals as required; identify all changes made since previous submittal.

8. Submittals will be acted upon by Engineer and transmitted to Contractor not later than 10 working days after receipt by City/Engineer.

9. When Engineer has reviewed Shop Drawings, copies will be returned to Contractor appropriately annotated.

   a. If major changes or corrections are necessary, Shop Drawing may be rejected and one set will be returned to Contractor with such changes or corrections indicated.

   b. Correct and resubmit the Shop Drawings in the same manner and quantity as specified for the original submittal.

C. Foreign Manufacturers. Submit names and addresses of companies within the United States that maintain technical service representatives; include complete inventory of spare parts and accessories for each foreign-made item proposed for incorporation into the work. Failure to prove these capabilities shall be just cause for rejection of foreign-manufactured items.

D. Interfacing Work. Where called for in the Specifications and as determined necessary by the City/Engineer to provide proper correlation with other work, complete inter-face

information shall be submitted. This interface information shall be accurate and contain all information necessary to allow for manufacturing and construction of the interfacing or connecting work.

1.07 SAMPLES AND TEST SPECIMENS

A. Where required in the Specifications and as determined necessary by the City/Engineer, submit test specimens or samples of material, appliances, and fittings to be used or offered for use in connection with the work. Include information as to their sources, prepay cartage charges, and submit such quantities and sizes for proper examination and tests to establish the quality or equality thereof, as applicable.

B. Submit samples and tests specimens in ample time to enable City/Engineer to make tests or examinations necessary, without delay to the work.

C. Submit additional samples as required by City/Engineer to ensure equality with the original approved sample and/or for determination of Specification compliance.

D. Tests required by the Specifications to be performed by an independent laboratory shall be made by a laboratory licensed or certified in accordance with state statutes.

   1. Submit certified test results of specified tests in duplicate to the City/Engineer.

E. Samples and laboratory services shall be at the expense of Contractor, unless otherwise specified, and included in the prices bid for the associated work.

F. Approved sample items (fixtures, hardware, etc.) may be incorporated into the work upon approval and when no longer needed by City/Engineer for reference.

1.08 QUALITY CONTROL SUBMITTALS

A. Manufacturers' Certification of Proper Installation. Where manufacturer's certification is required in the Specifications, the manufacturer shall provide certification stating the following:

   1. The product or system has been installed in accordance with the manufacturer's recommendations.

   2. A manufacturer's authorized representative has inspected the product or system.

   3. The product or system has been serviced with the proper lubricants.

   4. Applicable safety equipment has been properly installed.

   5. Proper adjustments have been made, and the product or system is ready for functional testing, and operation.

B. Certification of Compliance:

1. Where specified, furnish certification of compliance for products specified to a recognized standard or code prior to the use of such products in the work.

   a. City/Engineer may permit use of certain materials or assemblies prior to sampling and testing if accompanied by a certification of compliance.

   b. The manufacturer of the product shall sign certifications; state that the components involved comply in all respects with the requirements of the Specifications.

   c. Furnish certification of compliance with each lot delivered to the job-site and clearly identify the lot so certified.

2. Products used on the basis of a certification of compliance may be sampled and tested at any time. The fact that a product is used on the basis of a certification of compliance shall not relieve Contractor of responsibility for incorporating products in the work, which conform to requirements of the Contract Documents. Products not conforming to such requirements will be subject to rejection whether in place or not.

3. City/Engineer reserves the right to refuse permission for use of products on the basis of a certification of compliance.

C. Functional Test Certification. Where a certification of functional testing is specified for certain equipment, the Contractor (as applicable to the equipment furnished) shall state in writing that:

1. Necessary piping systems, valves, and equipment have been successfully tested.

2. Necessary equipment systems and subsystems have been checked for proper installation, started, and successfully tested to indicate they are operational.

3. Adjustments and calibrations have been made.

4. The systems and subsystems are capable for performing their intended functions.

5. The facilities are ready for performance testing, or for startup and intended operation, as applicable.

6. The manufacturer has reviewed and acknowledged this certification.

1.09 OPERATION AND MAINTENANCE (O & M) MANUALS

A. General. City/Engineer will determine adequacy of each O & M Manual as to content, organization, quality, and adequacy. Furnish acceptable manuals as reviewed by the City/Engineer.

B. Procedures:

1. Furnish five (5) copies of complete instruction manual for installation, operation, maintenance, and lubrication requirements for each unit or common units of mechanical and electrical equipment or system. The Contractor will assemble the O & M Manuals into one set for the entire project. The contractor shall also provide one "photo ready" copy of complete manual along with the above stated bound sets of the manual.

2. Furnish manufacturer's data and installation instructions at least 10 working days prior to installation of the respective equipment. Correct deficiencies found in the submitted manual within 30 calendar days following notification of the deficiencies.

3. Manuals shall be customized to describe the equipment actually furnished, and shall not include extraneous data for models, options, or sizes not furnished.

   a. Where more than one model, option, or size of an equipment type is furnished, clearly indicate the information pertaining to each model, option, or size furnished.

   b. Manufacturer's preprinted literature may be accepted provided it has been customized to clearly indicate the models, options, and sizes actually furnished, and that equipment models not furnished have been clearly crossed out or deleted.

4. Assemble each copy of the manual in one or more three-ring, hard-back type binders.

   a. Clearly label each binder to designate the system or equipment for which it is intended with reference to the building and equipment number, and the Specification section where the equipment is specified.

   b. Provide each binder with title page, typed table of contents with page numbers, and heavy section dividers with numbered plastic index tabs.

   c. Divide each manual into sections paralleling the equipment Specifications.

   d. Where more than one binder is required, they shall be labeled "Vol. 1," "Vol. 2," and so on. Place the table of contents for the entire set, identified by volume number, in each binder.

   e. Submit manual organization and format to City for approval prior to manual preparation.

   f. Punch all data for binding and composition; arrange printing so that punching holes does not obliterate data.

5. Material in manuals shall be suitable for photographic reproduction. Where copies of identical material are included, clarity and quality of copies shall equal the original.

1.10 CONTRACT CLOSEOUT SUBMITTALS

A. Record Drawings. The Contractor shall prepare and submit to the City/Engineer a clean copy of a marked-up (in red) set of Contract Drawings depicting all changes and modifications made during the construction.

B. O & M Manuals:

1. Submit final revised O & M Manual incorporating field testing results and additional instructions deemed necessary by City/Engineer after testing and startup.

2. Revise and resubmit manuals, or portions of manuals, found to be missing or incomplete from City/Engineer's punch list.

PART 2. PRODUCTS (NOT USED)

PART 3. EXECUTION (NOT USED)

END OF SECTION

SECTION 01700

CONTRACT CLOSEOUT

PART 1. GENERAL

1.01 DESCRIPTION

A. Work Included:

1. The work described in this section complies with the requirements stated in Conditions of the Contract and in Specifications for administrative procedures in closing out the work.

1.02 SUBSTANTIAL COMPLETION

A. When Contractor considers the work as substantially complete, he shall submit to the City/Engineer:

1. A written notice that work, or designated portion thereof, is substantially complete.

2. A list of items to be completed or corrected.

B. Within a reasonable time after receipt of such notice, City/Engineer shall observe the work to determine the status of completion.

C. Should City/Engineer determine that the work is not substantially complete:

1. The City/Engineer will promptly notify the Contractor in writing, giving the reasons therefor.

2. The Contractor shall remedy the deficiencies in the work and send a second written notice of substantial completion to the City.

3. City/Engineer will review the work.

4. Contractor shall pay for City/Engineer’s time and direct expenses where more than one substantial completion notice is required.

D. When the City/Engineer finds that the work is substantially complete, he will:

1. Prepare and deliver to the Contractor a tentative list of items to be completed or corrected before final payment.

1.03 FINAL ACCEPTANCE

A. When the Contractor considers the work is complete, he shall submit written certification that:

1. Contract Documents have been reviewed.

2. Work has been inspected for compliance with Contract Documents.

3. Work has been completed in accordance with Contract Documents.

4. Equipment and systems have been tested in the presence of the City/Engineer and are operational.

5. Work is completed and ready for final acceptance.

B. City/Engineer will inspect the work to verify the status of completion with reasonable promptness after receipt of such certification.

C. Should City consider that the work is incomplete or defective:

1. City will promptly notify the Contractor in writing, listing the incomplete or defective work,

2. Contractor shall take immediate steps to remedy the stated deficiencies, and send a second written certification to the City that the work is complete, and

3. Engineer will inspect the work.

D. When the City/Engineer finds that the work is acceptable under the Contract Documents, he shall request the Contractor to make closeout submittals.

1.04 CLOSEOUT SUBMITTALS

A. The Contractor shall provide evidence of compliance with the requirements of the governing authority.

B. The Contractor shall submit and receive acceptance of accurate "as-built" drawings of the project.

C. The Contractor shall submit and receive acceptance of all specified warranties, guarantees, and operation and maintenance manuals.

D. The Contractor shall furnish all required spare parts as per the Contract requirements.

1.05 FINAL ADJUSTMENT OF ACCOUNTS

A. The Contractor shall submit a final statement of accounting to the City of Sacramento.

B. Statement shall reflect all adjustments to the Contract Sum:

1. The original Contract Sum.

2. Additions and deductions resulting from:

a. Previous change orders or written amendment.

b. Allowances.

c. Unit prices.

d. Deductions for uncorrected work.

e. Failed test costs.

f. Penalties.

g. Deductions for liquidated damages.

h. Deductions for re-review payments.

i. Other adjustments.

3. Total Contract Sum, as adjusted.

4. Previous payments.

5. Sum remaining due.

C. The Contractor shall submit satisfactory evidence of release of all liens or claims.

D. City will prepare a final Change Order, reflecting approved adjustments to the Contract Sum, which were not previously made by Change Orders.

1.06 FINAL APPLICATION FOR PAYMENT

A. Contractor shall submit the final Application for Payment in accordance with procedures and requirements stated in the Conditions of the Contract.

PART 2. PRODUCTS (NOT USED)

PART 3. EXECUTION (NOT USED)

END OF SECTION

SECTION 02050

DEMOLITION/REUSE- EXISTING BFS COMPONENTS/EQUIPMENT

PART 1. GENERAL

1.01 DESCRIPTION

A. Work Included:

1. The work described in this section consists of furnishing all labor, materials, equipment, and incidentals necessary to complete the existing BFS components/equipment demolition, re-activation of equipment in other site area and restoration for the work area, complete as shown on the Contract Drawings and as specified herein. The intent of this work is to remove components of the existing BFS equipment from the area where the new flare and blower skid is to be located and to relocate removed components from the location and reassemble and reactivate said components to a proximate location within the BFS site area. Other items included in the demolition plan are required to provide a clean accessible, uniformly graded area, where construction of concrete slabs and new equipment and appurtenances will be placed as part of flare replacement activities put forth in Contract Documents. The work also includes the removal of miscellaneous equipment and surface obstructions, as applicable, to allow for future use of unoccupied site areas by the City. This includes, but is not limited to:

   a. Initial inventory of recyclables, including dated BFS equipment: piping, control panels, mechanical components, compressors, inoperable blowers, etc.,

   b. Cutting and capping of underground utilities (as found during utility locating and/or from City provided existing documentation),

   c. Removal of all electrical and mechanical equipment, including blowers (2 site areas), an moisture knockout vessel; and, all HDPE piping and valves, gauges, electrical control panel, Meter/Main circuit breaker(s), etc., not being relocated or used elsewhere in the Contract Drawings,

   d. Removal of slabs and pads (where shown in the Contract Drawings),

   e. Removal of fencing and gates, as applicable, and/or replacement of such if required to be removed for Contractor to complete flare replacement work; and,

   f. Protection of adjacent facilities, including performing equipment removal work in such a manner that said work will not interfere with the continuous operation of the existing BFS currently operating at the Site. Protection of any operable equipment within the BFS, including proximate GCCS

components (both, above and below-grade) for the BFS and associated re-grading and site restoration (as indicated on the Contract Drawings).

B. Related Work Specified Elsewhere:

1. Section 02220 – Excavation, Backfilling, and Compaction.

1.02 FEDERAL AND STATE REGULATORY REQUIREMENTS

A. Comply with applicable Federal and State Occupational Safety and Health regulations and environmental statutes.

B. Comply with State Building Codes and any municipal requirements.

C. Comply with the requirements of applicable Federal regulations that may prevail over State regulations, but not limited to: Title 40, Code of Federal Regulations Parts 261, 262, 264, 265, and 268.

D. Comply with requirements of Sacramento City, County, and SMAQMD.

E. Conform to applicable codes for demolition, safety, dust control, service utilities and material handling.

F. Do not close or obstruct roadway, sidewalks, or other off-site areas/structures without prior approval of the City.

1.03 SUBMITTAL

A. Provide all required submittals per Section 01300. Describe methods and locations for demolition and reuse of equipment and related items of work in the Contractor Method Statements. The Method Statement for this work shall also include demolition stockpile locations or other City building staging area(s) as approved by the City.

B. The Contractor shall submit any plans required by local permits or State Building Codes.

1.04 SAFETY REQUIREMENTS

A. The Contractor shall perform all work in accordance with the safety features required in Section 01030 - Special Provisions.

PART 2. PRODUCTS

2.01 MATERIALS

A. General:

1. The City must approve all fill material necessary to meet grades shown in the BFS work area.

2. On-site excavated materials, if applicable, may be used where approved by the City.

3. Rocks larger than 3 inches in diameter, trash, and objectionable materials shall be removed from all fills to be compacted.

B. Fill Materials:

1. Bedding. Bedding shall consist of granular material containing no pieces larger than 2 inch and free of broken concrete, broken pavement, wood, organic material, refuse, or other deleterious material (as applicable on Contract Drawings).

2. Backfill. Backfill shall be sound earthen material free from broken concrete, broken pavement, wood, organic material, refuse, or other deleterious material. Unless otherwise specified, this may be native material with no piece larger than 2 inches.

3. Gravel. As specified in drawings, and as described in Section 11180-Part 2 of these specifications.

4. Water. Potable water.

5. Materials falling within the above specifications, encountered during the excavation/trenching activities, may be stored in segregated stockpiles for reuse. All material, which, in the opinion of the City, is not suitable for reuse, shall be spoiled as specified herein for disposal of unsuitable materials.

PART 3. EXECUTION

3.01 PREPARATION

A. Provide, erect and maintain work facilities and temporary controls as indicated in applicable Division 1 Sections.

B. The Contractor shall conduct work with minimum interference to the public or private accesses and shall maintain protected access and egress at all times.

C. The Contractor shall protect the adjacent existing BFS and utilities during demolition work.

D. The Contractor shall ensure that site drainage, designated drainage, natural drainage or diversions neither are nor obstructed by and during demolition work, except to the extent required for storm water controls.

3.02 DEMOLITION

A. Demolish and remove all surface and shallow underground structures. A non-inclusive summary of the items included in the demolition work is

1. Designated underground and above-ground piping.

2. Concrete slabs and flare and blower pads.

3. All stand-alone equipment items, including blower/motor assemblies, moisture knock-out vessel, control panel with all accessories, pipe supports, and vaults. Chain linked fencing and gates (if applicable), electrical conduits, etc., within the work area and set forth in the Contract Documents.

4. Any ground level protuberances that may create trip puncture or pedestrian or maintenance vehicle driving hazard (i.e., equipment bollards, rebar, grade stakes, angle iron, etc.)

5. Extraneous debris or trash and any other unspecified items that may exist within the fenced area of the existing BFS area.

3.03 CLEANUP AND BACKFILL

A. The Contractor shall remove demolition material from the site as work progress.

B. Depressions and voids created as a result of the demolition work shall be backfilled as specified in Section 02220. The area shall be graded as shown in the final grading plan.

C. Burning of materials in any way shall not occur on-site.

D. Silt fencing and other storm control structures (as applicable) shall be removed once the local sediment control permit has been closed-out after the project acceptance by the City.

END OF SECTION

SECTION 02220

EXCAVATION, GRADING, BACKFILLING, AND COMPACTION

PART 1. GENERAL

1.01 DESCRIPTION

A. Work Included:

1. The work described in this section consists of furnishing all labor, materials, equipment, and incidentals necessary for excavating or trenching, grading, backfilling, and compacting, complete as shown on the Contract Drawings and as specified herein.

B. Related Work Specified Elsewhere:

1. Section 01030 – Special Provisions

1.02 FEDERAL AND STATE REGULATORY REQUIREMENTS

A. All trench excavations which exceed 4 feet in depth shall comply with the applicable trench safety standards as stated in the OSHA excavation safety standards 29 CFR S.1926.650 Subpart P.

1.03 JOB CONDITIONS

A. Protection of Existing Items:

1. All benchmarks, monuments, and other reference points shall remain undisturbed unless specifically directed otherwise by the Engineer or Owner (City).

2. The contractor shall take precautions to protect existing features within the Contract work area(s) including roadways, drainage systems (if applicable), subsurface utilities, and pneumatic or electric condensate sumps.

3. Existing ground surface(s) (i.e., native soils, asphalt, or concrete) shall be restored in-kind.

B. Coordination with Others:

1. Contractor shall give adequate prior notice to the City/Engineer, utility agencies, public or private utility locating companies, and other legal authorities prior to starting work.

2. Contractor shall coordinate his or her operations with other trades, utility firms, and other affected public departments to assure continuity for both access and service of all utility service distribution lines, in conformance with applicable requirements of these organizations. Services to adjacent, adjoining property shall not be impeded.

1.04 SUBMITTALS

A. Submittals shall be made in accordance with Section 01300 - Submittals. In addition, the Contractor shall submit to the Engineer for review the proposed methods of construction, including dewatering (if applicable), excavation, bedding, backfilling, trench shoring (if applicable), and compaction for various portions of the work. Review shall be for method only. The Contractor shall be responsible for the adequacy and safety of the methods.

1.05 SAFETY REQUIREMENTS

A. The Contractor shall perform all work in accordance with the safety features required in Section 01030 - Special Provisions.

PART 2. PRODUCTS

2.01 MATERIALS

A. General:

1. The Engineer must approve all fill material (unless provided by City).

2. On-site excavated materials may be used where approved by the Engineer/City.

3. Rocks larger than 4 inches in diameter, trash, and objectionable materials shall be removed from all fills to be compacted.

B. Fill Materials:

1. Bedding. Bedding shall consist of granular material containing no pieces larger than 2 inch and free of broken concrete, broken pavement, wood, organic material, refuse, or other deleterious material.

2. Backfill. Backfill shall be sound earthen material free from broken concrete, broken pavement, wood, organic material, refuse, or other deleterious material. Unless otherwise specified, this may be native material with no piece larger than 2 inches. Fill materials used for wells, shall not have any piece larger than 1 inch.

3. Gravel. As specified in drawings, and as described in Section 11180-Part 2 of these specifications.

4. Water. Potable water.

5. Materials falling within the above specifications, encountered during the excavation or trenching activities, may be stored in segregated stockpiles for reuse. All material, which, in the opinion of the Engineer, is not suitable for reuse, shall be spoiled as specified herein for disposal of unsuitable materials per direction of the City.

PART 3. EXECUTION

3.01 INSPECTION

A. Verification of Existing Conditions:

1. In addition to examining the topographic survey, the Contractor is expected to have visited and inspected the site in order to determine the grades and true conditions under which the work is to be performed.

2. Should any omissions, conflicts, or ambiguities in the Specifications or Drawings be discovered during the examination of the Contract Documents or upon visiting the premises of the project during the construction, such discrepancies shall be brought to the attention of the Engineer prior to construction. The questions will be reviewed and, where the information sought is not clearly specified or indicated on the Drawings, a clarification will be issued which shall become a part of the Construction Documents.

3.02 PREPARATION

A. Staking Out Line and Grade:

1. The Contractor shall provide offset line and grade stakes at ground level for LFG headers and laterals, and all points of slope change along the LFG collection system. The Contractor shall be responsible for transfer of such offset line and grade into the trench (where necessary) for construction of the work and for the accuracy of such transfer.

2. For buried LFG connection headers, prior to backfilling the trenches, the Contractor shall survey the compacted pipe bedding to verify the slopes of headers as specified in the Contract Drawings. The surveyed information shall be submitted to the City/Engineer for preparation of the “As-Built” drawings.

3.03 PROTECTION

A. Pumping and Drainage (if applicable):

1. The Contractor shall at all times during construction provide and maintain proper equipment and facilities to remove all water entering excavations, and shall keep such excavations dry so as to obtain a satisfactory undisturbed sub grade foundation condition.

2. Dewatering shall at all times be conducted in such a manner as to preserve the undisturbed bearing capacity of sub-grade soils at the bottom of the excavation.

3. Water entering the excavation from surface runoff shall be collected in shallow ditches around the perimeter of the excavation, drained to sumps, and pumped from the excavation to maintain a bottom free from standing water.

4. Conveying of dewatered liquids in open ditches or trenches will not be allowed. Permission to use any storm sewers, or drains, for water disposal purposes shall be obtained from the authority having jurisdiction. Any requirements and costs for such use shall be the responsibility of the Contractor. The Contractor shall not cause flooding by overloading or blocking flow in the drainage facilities, and shall leave the facilities unrestricted and clean as originally found. Any damage to facilities shall be repaired or restored as directed by the Engineer or the authority having jurisdiction, at no cost to the County.

3.04 EXCAVATION, BACKFILL, AND COMPACTION

A. Materials:

1. To the maximum extent available, excess earth obtained from structure and trench excavation shall be used as fill material.

2. Materials placed in backfill shall be free from rocks or stones larger than 2 inches, as well as brush, stumps, logs, roots, debris, and organic or other deleterious materials; and must be approved by the Engineer.

B. Excavation and Backfilling:

1. If the bottom of any excavation is taken below the limits shown on the Contract Drawings or specified or directed by the Engineer, it shall be refilled at the Contractor's expense with the materials specified in Item 2.01.

2. If, in the opinion of the City/Engineer, the material, in its undisturbed natural condition, at or below the normal grade of the excavation as indicated on the Contract Drawings, is unsuitable for foundation, it shall be removed to such depth and width as he may direct and replaced with suitable material.

3. Excavation for all trenches required for the installation of LFG header sections and subsurface utilities shall be made to the depths indicated on the Contract Drawings and per applicable electrical code in such manner and to such width as will give adequate room for laying and installing the pipes or conduits, for bracing and supporting, and for pumping and draining facilities; the bottom of the excavation shall be rendered firm and dry and in all respect acceptable to the City/Engineer. The length of the trench shall be limited to the Contractor's capabilities to excavate, install the pipe, backfill, and compact in 1 working day. No trench shall be allowed to remain open overnight, unless otherwise approved by the City/Engineer.

4. Rock shall be removed to a minimum of 8-inch clearance around bottom and sides of all pipes being laid.

5. Bedding shall be placed to a depth of 6 inches below the bottom of pipe, and 6 inches above top of pipe and shall be thoroughly compacted by hand-tamping as placed with at least one man tamping for each man shoveling material into the trench.

6. As soon as practical after the pipe or conduit has been laid, jointed, and tested, backfilling shall begin and thereafter be prosecuted expeditiously.

7. Excavations shall be backfilled to the original grades or as indicated on the Contract Drawings. Deviation from these grades because of settling shall be corrected by the Contractor. Backfill operation shall be performed to comply with all rules and regulations and in such manner that it does not create a nuisance or safety hazard

C. Compaction:

1. Earthfill/subgrade for the reinforced concrete slabs, pads, pipe support footings, and containment structure shall be compacted to 95 percent of maximum dry density as determined by the latest edition of ASTM D-1557, Method D. Subgrade for the structural foundation shall be backfill and compacted in maximum 9-inch thick layers.

2. Backfill in trenches shall be placed in layers not to exceed 12 inches in depth and compacted to at least 90 percent of maximum dry density as determined by ASTM D-1557-91, Method D.

3. The Contractor shall hire an independent soil-testing laboratory the conduct the compaction tests and submit the results to the County. A minimum of one test per 50 linear feet of trench and two per each structural slab and footing shall be conducted. Additional tests, if requested by the City, shall be conducted at no cost to the City. If the test indicates that the backfilling is not compacted as specified, then the Contractor shall re-compact the area and retest for compaction at no extra cost to the City.

4. Compaction by water flooding or jetting shall not be permitted.

3.05 EXCESS EXCAVATED MATERIALS

A. All suitable excess excavated material shall be stockpiled in areas specified by the City/Engineer.

B. All debris, junk, stones, refuse, logs, stumps, roots, and other unsuitable excavated or drilled materials will be disposed of by the Contractor through proper means and/or under direction of the City or their authorized representative.

END OF SECTION

SECTION 02830

CHAIN-LINK FENCE AND GATES

PART 1. GENERAL

1.01 DESCRIPTION

A. Work Included:

1. The work described in this section consists of furnishing all labor, materials, and equipment necessary to remove and replace existing chain-link fence and/or gates, if deemed necessary, to complete Contract work and/or as shown on the Contract Drawings and as specified herein.

B. Related Work Described Elsewhere:

1. Section 03300 - Concrete.

1.02 SUBMITTALS

A. Submittals shall be made in accordance with Section 01300 - Submittals, Division 1 of the General Requirements. In addition, the following specific information shall be provided:

1. Product data in the form of manufacturer's technical data, specifications, and installation instructions for gates, posts, fabric, and accessories.

2. Shop Drawings showing location of gates, each post, and details of post installation, extension arms, gate swing, hardware, and accessories.

1.03 QUALITY ASSURANCE

A. Single-Source Responsibility. Obtain chain-link fences and gates as complete units, including necessary erection accessories, fittings, and fastenings from a single source or manufacturer.

B. Installation shall be done by a company specializing in commercial quality fencing work with at least 3 years of experience.

1. Acceptable manufacturers:

2. Allied Tube and Conduit Corp.

3. Anchor Fence, Inc.

4. Cyclone Fence/United State Steel Corp.

5. Or approved equal.

PART 2. PRODUCTS

2.01 GENERAL

A. Posts, rails, rods, fittings, and hardware shall be hot-dipped, zinc-coated steel. Repair of damaged galvanized metal to be by Galowelding off site, or by cold galvanized high-zinc content paint.

B. Fence components shall be galvanically compatible.

2.02 MATERIALS

A. Frame work: Schedule 40 steel pipes with 1.8 ounces of zinc coating per square foot of surface area conforming to Standard Specification ASTM A-120. Pipe shall be straight, true to section, and conform to the following weights:

Pipe Size Outside Diameter	Weight lbs/ft
1-5/8”	2.27
2”	2.72
2-1/2”	3.65
3”	5.79
3-1/2”	7.58
4”	9.11

B. Fabric: Zinc-Coated or Aluminum-Coated Steel. Zinc-coated fabric shall be galvanized after weaving with a minimum 1.2 ounces of zinc per square foot of surface area and conform to ASTM A-392, Class I. Aluminum-coated fabric shall be manufactured in accordance with ASTM A-491 and coated before weaving with a minimum of 0.1 ounces of aluminum per square foot of surface area. The steel wire and coating shall conform to ASTM A-817.

C. Fittings: Pressed steel or cast iron, galvanized with a minimum of 1.2 ounces of zinc per square foot of surface area, or cast aluminum alloy, all conforming to ASTM F-626.

2.03 CONCRETE MIX

A. ASTM C-94 Portland Cement concrete with maximum 3/4” aggregate having a minimum compressive strength of 2,500 psi at 28 days.

2.04 COMPONENTS

A. Fence Posts:

Fabric Height	Line Post Outer Diameter (O.D.)	Terminal Post O.D.
Under 6’	2”	3”
6’ to 9’	2-1/2”	3”
9’ to 12’	3”	4”

B. Gate Posts:

Single Gate Width	Double Gate Width	Post O.D.
Up to 6’	Up to 12’	3”
7’ to 12’	13’ to 25’	4”

C. Rails and Braces:

1-5/8” O.D. Steel Pipe

D. Fabric: Galvanized or aluminum-coated steel wire, 9-gage, woven in a 2-inch diamond mesh with top salvage twisted and barbed and bottom salvage knuckled. Fence heights to be one-piece widths.

E. Gates: Frame assembly of 2-inch O.D. steel pipe with welded joints. Weld areas repaired with zinc-rich coating applied per manufacturer’s directions. Fabric to match fence. Gate accessories, hinges, latches, center stops, keepers, and necessary hardware of quality required for industrial and commercial application. Latches shall permit padlocking of gate. Locks shall be a five pin tumbler type, Master Lock No. 6 or equivalent. All site locks shall be keyed alike and six (6) copies must be supplied to the Engineer. Barbed wire shall be installed at top of gates.

F. Fittings:

1. Post Caps - pressed steel, cast iron, or cast aluminum alloy designed to fit snugly over posts to exclude moisture. Supply cone type caps for terminal posts and loop type for line posts.

2. Rail and Brace Ends - pressed steel, cast iron, or cast aluminum alloy, cup-shaped to receive rail and brace ends.

3. Top Rail Sleeves - tubular steel, 0.051 thickness by 7 inch long, expansion type.

4. Tension Bars - steel strip, 5/8 inch wide by 3/16 inch thick.

5. Tension Bands - pressed steel, 14 gage thickness by 3/4 inch wide.

6. Brace Bands - pressed steel, 12 gage thickness by 3/4 inch wide.

7. Truss Rods - steel rod, 3/8-inch diameter merchant quality with turnbuckle.

8. Barbed Wire Arms - pressed steel, cast iron, or cast aluminum alloy fitted with clips or slots for attaching three strands of barbed wire. Arms shall be set outward on a 45 degree angle and be capable of supporting a 250-pound load at outer barbed wire connecting point without causing permanent deflection.

G. Tension Wire: Marcelled 7 gage steel sire with minimum coating of 0.80 ounces of zinc or 0.10 ounces of aluminum per square foot of wire surface and conforming to ASTM A-821.

H. Barbed Wire: Commercial quality steel, 12-1/2 gage, three strand twisted line wire with 4-point barbs at 5-inch spacing. Coating shall consist of a minimum of 0.80 ounces of zinc per square foot of wire surface conforming to ASTM A-121 or a minimum of 0.30 ounces of aluminum per square foot of wire surface conforming to ASTM A-585.

I. Tie Wires: Aluminum 9 gage, alloy 1100-H4 or equal.

J. Hog Rings: Steel wire, 11-gage with a minimum zinc coating of 0.80 ounces per square foot of wire surface.

PART 3. EXECUTION

3.01 INSPECTION

A. Contractor shall examine site and report in writing to City/Engineer any conditions detrimental to the proper and timely completion of the work. The Contractor shall include in the report a discussion of the necessity of grounding the fence in accordance with the National Electric Safety Code (NESC). Clearing, grading, fence line layout and staking of terminals to be completed by Contractor before start of fence installation. The grading of the fence line shall not impact the surface water flow.

B. Contractor shall receive reviewed Shop Drawings from Engineer before starting installation.

3.02 INSTALLATION

A. General. Fence installation to conform to requirements of ASTM F-567.

B. Secure Fence. The Contractor shall secure fence fabric to discourage theft of fence fabric from the site. This shall be accomplished by welding the fence fabric to each third post at a minimum of three locations per post, in the middle of the post, and at the top and bottom. All the welds shall be treated to prevent corrosion.

C. Height. Provide fence heights as indicated on the Contract Drawings.

D. Post Spacing. Space line posts at intervals not exceeding 10 feet.

E. Post Setting. Set terminal, gate, and line posts plumb in concrete footings as indicated on Contract Drawings. Top of footing to be 2 inches above grade and sloped to direct water away from posts.

F. Bracing. Brace gate and terminal posts back to adjacent line posts with horizontal brace rails and diagonal truss rods.

G. Top Tension Wire. Stretch between terminal posts and fasten to outside of line posts with tie wires. It shall also be fastened to the fabric every 18 inches with either wire ties or hog rings.

H. Bottom Tension Wire. Stretch between terminal posts no more than 6 inches above grade and fasten to outside of line posts with tie wires. It shall also be fastened to the fabric every 18 inches with either wire ties or hog rings.

I. Fabric. Pull fabric taut to provide a smooth uniform appearance, free from sag, with bottom salvage no more than 2 inches above grade. Fasten to terminal posts with tension bars threaded through mesh and secured with tension bands at maximum 15-inch intervals. Tie to line posts and top rails with tie wires spaced at maximum 12 inches on posts and 24 inches on rails. Attach to bottom tension wire with hog rings at maximum 24-inch intervals.

J. Barbed Wire. Anchor to terminal extension arms, pull taut to remove all sag and firmly install in slots of line post extension arms. Barbed wire shall support 200 lb weight.

K. Gates. Install gates plumb, level, and secure for full opening without interference. Anchor center stops and keepers in concrete. Adjust and lubricate hardware for smooth operation.

L. Fasteners. Install nuts for fittings, bands, and hardware bolts on inside of fence. Peen ends of bolts or score threads to prevent removal.

M. The fence shall be grounded in accordance with the requirements of the NESC as determined by the Contractor and approved by the Engineer as being applicable to this site.

3.03 COMPLETION

A. The area of installation shall be left neat and free of any debris caused by the erection of the fence.

END OF SECTION

SECTION 03100

CONCRETE FORMWORK

PART 1. GENERAL

1.01 DESCRIPTION

A. Work Included:

1. The work described in this section consists of providing formwork for concrete.

B. Related Work Specified Elsewhere:

1. Section 03200 - Steel Reinforcement.

2. Section 02220 – Excavation, Backfilling and Compaction.

3. Section 03300 - Concrete.

1.02 QUALITY ASSURANCE

A. Standards. Unless otherwise indicated, all materials, workmanship, and practices shall conform to the following standards:

1. California Building Code, Uniform Building Code.

2. American Concrete Institute (ACI) 347, Recommended Practice for Concrete Formwork.

B. Responsibility. The Contractor shall be responsible for the design of the formwork and for safety in its construction, use, and removal.

C. Tolerances. Formwork shall be constructed to insure that finished concrete surfaces will be in accordance with the tolerances listed in ACI 347. Camber shall be provided as necessary to compensate for anticipated deflection in formwork and concrete due to weight and pressure of fresh concrete and other construction loads.

PART 2. PRODUCTS

2.01 MATERIALS

A. Plywood. Unless otherwise indicated, forms shall be PLYFORM, Class 1, BB-Exterior type, mill oiled and edge sealed. Thickness shall be as required to support concrete at the rate placed, but not less than 3/4-inch.

B. Form Accessories. Form accessories shall be of a commercially manufactured type. Form ties shall be so constructed that the ends, or end fasteners, can be removed without causing

appreciable spalling at the face of the concrete. After ends, or end fasteners of form ties have been removed, the embedded portion of the ties shall terminate not less that 1-1/2 inches from the form face of the concrete. Use imbedded rods with integral water stops and cones. Wire ties and wood spreader will not be permitted.

C. Chamfer Strips. Chamfer strips shall be wood strips or other approved material designed to be nailed in the forms to provide a 3/4-inch chamfer at exposed edges of concrete members.

D. Form Release Agent. Form release agent shall be a paraffin base oil or mineral oil coating that will effectively prevent absorption of moisture and prevent bond with concrete, will not stain the concrete surfaces, and will leave the concrete with a paintable surface.

PART 3. EXECUTION

3.01 INSTALLATION

A. Construction of Formwork. Forms shall be sufficiently strong to withstand the pressure resulting from the placement and vibration of concrete and shall be sufficiently rigid to maintain specified tolerances. Forms shall be sufficiently tight to prevent loss of mortar. Forms shall be adequately braced against lateral, upward, or downward movement.

B. Adjustment. Positive means of adjustment of shores and struts shall be provided and all settlement shall be taken up during concrete placing.

C. Temporary Openings. Temporary openings shall be provided in wall forms to limit the free fall of concrete to a maximum of 4 feet unless an elephant trunk is used. Such openings shall be located to facilitate placing and consolidation and shall be spaced no more than 8 feet apart. Temporary openings shall also be provided in the bottom of wall and column forms and elsewhere as necessary to facilitate cleaning and observation immediately prior to placing.

D. Construction Joints. At construction joints, the contact surfaces of the form sheathing shall overlap the hardened concrete by not less than 1-inch. Forms shall be held against the hardened concrete to prevent offsets or loss of mortar.

E. Chamfers. All exposed concrete edges shall be chamfered 3/4 inch by 3/4 inch, unless otherwise indicated on the Drawings.

F. Form Facing Materials. The facing material shall produce a hard uniform texture on the concrete. Facing materials with raised grain, torn surfaces, worn edges, patches, dents, or other defects shall not be used. The maximum deflection of facing materials as reflected in concrete surfaces shall not exceed 1/240 of the span between structural members.

G. Preparation of Form Surfaces. After each use and prior to placing reinforcing, forms shall be cleaned of mortar, grout, and other foreign material and the form release agent shall be applied. Form releasing agent shall not be allowed to stand in puddles in the forms or

allowed to come in contact with hardened concrete against which fresh concrete is to be placed.

H. Runways. Smooth and rigid runways shall be provided (if needed) for moving equipment and concrete. Runways shall be supported directly on grade and in no case on formwork, reinforcing steel or bar supports.

I. Form Removal. Formwork for columns, walls, sides of beams and other parts not supporting the weight of the concrete shall not be removed prior to 24 hours after pour. Forms and shoring supporting the weight of concrete in beams, slabs, walls, and other members shall remain in place until the concrete has attained a minimum of 3,000 psi compressive strength. Removal of forms and supports shall be in accordance with ACI 306, Figure 6.5.

J. Slab Edges. Exterior faces of slab edges shall be formed with plywood.

K. Embedded Items. Set anchor bolts and other embedded items accurately and hold securely in position in the forms until the concrete is placed and set. Check all special castings, channels, or other metal parts that are to be embedded in the concrete prior to and again after concreting. Check all nailing, blocks, plugs, and strips necessary for the attachment of trim, finish, and similar work prior to concreting.

L. Pipes Supports Cast in Concrete:

1. Support pipe and fabricated fittings to be encased in concrete on concrete piers or pedestals. Carry concrete supports to firm foundations so that no settlement will be possible during construction.

END OF SECTION

SECTION 03200

STEEL REINFORCEMENT

PART 1. GENERAL

1.01 DESCRIPTION

A. Work Included:

1. The work described in this section consists of providing reinforcing steel and welded wire mesh for cast-in-place concrete structures.

B. Related Work Specified Elsewhere:

1. Section 03100 - Concrete Formwork.

2. Section 03300 - Concrete.

1.02 QUALITY ASSURANCE

A. Standards. Unless otherwise indicated, all materials, workmanship, and practices shall meet all requirements of the latest editions of the following standards:

1. Standard Building Code.

2. ACI 318, Building Code Requirements for Reinforced Concrete.

3. ACI 315, Details and Detailing of Concrete Reinforcement.

4. CRSI Manual of Standard Practice, MSP-1.

1.03 SUBMITTALS

A. Complete Shop Drawings shall be submitted for review in accordance with Section 01300 - Submittals, including bar lists and placing drawings. Drawings shall show the type, spacing, and location of metal bar supports, the grade of the reinforcing, and the name of the manufacturer.

PART 2. PRODUCTS

2.01 MATERIALS

A. Reinforcing Bars: ASTM A-615, Grade 60, deformed bars of a USA manufacturer.

B. Metal Bar Supports: CRSI MSP-1, Chapter 3, Class 2, Type B, Stainless Steel Protected Bar Supports.

2.02 FABRICATION

A. Fabrication shall not begin until approval of the Shop Drawings by the Engineer has been received. Fabrication shall meet all requirements of the specified standards. Unless otherwise indicated, the following shall apply:

1. Hooks shall be standard hooks.

2. Bottom bars shall extend a minimum of 6 inches into supporting members.

3. Cover is to the outermost stirrup, tie, or bar.

4. Splices are permitted only where indicated on the Drawings.

PART 3. EXECUTION

3.01 INSTALLATION

A. Supporting Reinforcing. Bar supports shall be provided as required by CRSI MSP-1 and ACI 315. Top and bottom bars in slabs formed on earth shall be supported on precast concrete block supports except where such bars are properly supported from formwork. Precast concrete block supports are not required in slabs formed on tremie concrete but may be used at the Contractor's option.

B. Placing Reinforcing. Placing of reinforcing and welded wire fabric shall be as indicated on the Drawings and as recommended by CRSI MSP-1 and ACI 315. Reinforcing shall be securely tied and supported to prevent displacement during concrete placement.

C. Dowels. Dowels shall be wired in position prior to placing concrete.

D. Field Bending. Heat shall not be used to bend bars. Bars shall not be bent after being embedded in concrete.

E. Welding. Welding of reinforcing will not be permitted, without permission of the Engineer.

F. Place reinforcement a minimum of 2 inches clear of any metal pipe or fittings.

END OF SECTION

SECTION 03300

CONCRETE

PART 1. GENERAL

1.01 DESCRIPTION

A. Work Included:

1. The work described in this section consists of furnishing all labor, materials, and equipment necessary to mix and place concrete for pads for blower skid, flare, and air compressor, complete as shown on the Contract Drawings and as specified herein.

B. Related Work Specified Elsewhere:

1. Section 03100 - Concrete Formwork.

2. Section 03200 - Steel Reinforcement.

1.02 QUALITY ASSURANCE

A. Standards. Unless otherwise indicated, all materials, workmanship, and practices shall conform to the requirements of the latest editions of the following standards:

1. Standard Building Code.

2. ACI 318, Building Code Requirements for Reinforced Concrete.

3. ACI 212, Guide for Use of Admixtures in Concrete.

4. ACI 309, Recommended Practice for Consolidation of Concrete.

5. ACI 350R, Concrete Sanitary Engineering Structures.

B. Plant Qualification. Plant equipment and facilities shall meet all requirements of the Check List for Certification of Ready Mixed Concrete Production Facilities of the National Ready Mixed Concrete Association and ASTM C-94.

C. Evaluation and Acceptance of Concrete. Evaluation and acceptance of concrete will be in accordance with ACI 318, Chapter 4.

1.03 SUBMITTALS

A. Submittals. The following information shall be submitted for review in accordance with Section 01300 - Submittals. No concrete shall be furnished until submittal has been approved by the Engineer.

1. Plant Qualification. Satisfactory evidence shall be submitted indicating compliance with the specified qualification requirements.

2. Materials. Satisfactory evidence shall be submitted indicating that materials to be used, including cement, aggregates, and admixtures, meet the specified requirements.

3. Design Mix. The design mix to be used shall be prepared by the Ready Mixed Concrete Production Plant and submitted for the Engineer's review and approval. The design of the mix is the responsibility of the Contractor subject to the limitations of the Specifications. Approval of this submission will be required only to insure that the minimum requirements of the Specifications have been met. Such approval will in no way alter the responsibility of the Contractor to furnish concrete meeting the requirements of the Specifications relative to strength and slump.

PART 2. PRODUCTS

2.01 MATERIALS

A. Cement:

1. Cement for all concrete shall be domestic Portland cement that conforms to the requirements of ASTM Designation C-150, Type II.

2. Only one brand of cement shall be used in any individual structure unless approved by the Engineer. Cement, which has become damaged, partially set, lumpy, or caked shall not be used and the entire contents of the sack or container, which contains such cement, will be rejected. No salvaged or reclaimed cement shall be used.

B. Aggregates:

1. ASTM C-33. Coarse aggregates shall be size No. 57, 1 inch to No. 4.

C. Water: Clean and free from injurious amounts of deleterious materials.

D. Air Entraining Admixture: ASTM C-260.

1. ASTM C-494, Type D, and shall not contain calcium chloride.

E. Water Reducing and Retarding Admixtures:

F. Curing compound shall meet ASTM C-309, Type 1D, Class B. The compound shall contain no ingredient, which will adversely affect the bond of protective coatings or toppings.

1. Curing compound for concrete shall be #64 RB, as manufactured by Lambert Corporation, or approved equal.

G. Mortar used for repair of concrete shall be made of the same materials as used for concrete, except that the coarse aggregate shall be omitted and the mortar shall consist of

not more than 1 part cement to 2 1/2 parts sand by damp loose volume. The quantity of mixing water shall be no more than necessary for handling and placing.

H. Burlap Mats: Conform to AASHTO Specification M182.

I. Epoxy Bonding Agent: Sikastix 370, Sikadur 32 Hi Mod, Concresive 1001-LPL, or approved equal.

2.02 MIXES

A. General Requirements:

1. Proportioning shall be on the basis of field experience and/or trail mixtures as specified in ACI 318, Section 4.3. Data on consecutive tests and standard deviation shall be submitted. Proportioning for small structures may be by the water/cement ratio under special approval by the Engineer.

2. Maximum Water-Cement Ratio: 0.55 (lb/lb).

3. Air Content: 6 percent plus or minus 2 percent.

4. Slump: 2 to 4 inches.

5. Minimum Compressive Strength at 28 days: 3,000 psi, unless stated otherwise.

B. Production of Concrete:

1. Concrete shall be ready mixed and shall be batched, mixed, and transported in accordance with ASTM C 94 except as otherwise indicated.

2. Air entraining admixture shall be charged into the mixture as a solution and shall be measured by means of an approved mechanical dispensing device. The liquid shall be considered a part of the mixing water.

3. Water reducing and retarding admixture shall be added and measured as recommended by the manufacturer. The addition of the admixture shall be separate from the air-entraining admixture. The addition of the admixture shall be completed within 1 minute after addition of water to the cement has been completed, or prior to the beginning of the last 3/4 of the required mixing, whichever occurs first. Admixtures shall be stored, handled, and batched in accordance with the recommendations of ACI 212.

C. The temperature of the concrete upon delivery from the truck shall not exceed 90 degrees F; otherwise, ice or other approved method shall be used to reduce the temperature of the concrete as recommended by ACI.

D. No modifications to the approved mix shall be made in the plant or on the job, which will decrease the cement content or increase the water-cement ratio beyond that specified. No modifications of any kind shall be made except by a qualified and responsible representative of the concrete producer.

PART 3. EXECUTION

3.01 PREPARATION

A. Preparations. No concrete shall be placed until the approval of the City/Engineer has been received. Approval will not be granted until forms are thoroughly clean and reinforcing and all other items required to be set in concrete have been placed and thoroughly secured.

B. Conveying:

1. Concrete shall be handled from the truck to the place of final deposit as rapidly as practicable by methods, which will prevent segregation or loss of ingredients to maintain the quality of the concrete. No concrete shall be placed more than 90 minutes after mixing has begun for that particular batch.

2. Buckets and hoppers shall have discharge gates with a clear opening equal to no less than 1/3 of the maximum interior horizontal area or 5 times the maximum aggregate size being used. Side slopes shall be no less than 60 degrees. Controls on gates shall permit opening and closing during the discharge cycle.

3. Hoppers and elephant trunks shall be used to prevent the free fall of concrete for more than 4 feet.

4. Chutes shall be metal or metal lined and shall have a slope not exceeding one vertical to two horizontal and not less than one vertical to three horizontal. Chutes more than 20 feet long and chutes not meeting the slope requirements may be used only if they discharge into a hopper before distribution.

5. Pumping equipment and procedures, if used, shall conform to the recommendations contained in the report of ACI Committee 304 on “Placing Concrete by Pumping Methods,” ACI 304.2R. The specified slump shall be measured at the point of discharge. The loss of slump in pumping shall not exceed 1-1/2 inches.

6. Aluminum or aluminum alloy pipe for tremies or pump lines and chutes, except for short lengths at the truck mixer, shall not be permitted.

7. Conveying equipment shall be cleaned at the end of each concrete operation.

3.02 APPLICATION

A. Placing:

1. Concrete shall be deposited continuously, or in layers of such thickness (not exceeding 2 feet in depth) that no concrete will be deposited on concrete that has hardened sufficiently to cause the formation of seams or planes of weakness. If planes of weakness or seams appear, they shall be repaired with pressure injected epoxy grout and patched to match.

2. Concrete shall be deposited as nearly as practicable in its final position to avoid segregation due to re-handling or flowing. Concrete shall not be subjected to procedure which will cause segregation.

B. Consolidating Concrete:

1. Concrete shall be consolidated by means of internal vibrators operated by competent workmen.

2. Vibrators shall have a minimum head diameter of at least 2 inches, a minimum centrifugal force of 700 pounds, and a minimum frequency of 8,000 vibrations per second.

3. Spare Vibrator. One spare vibrator for each three in use shall be kept on the site during all concrete placing operations.

4. Vibrators shall be inserted and withdrawn at points approximately 18 inches apart. The duration of each insertion shall be from 5 to 15 seconds. Concrete shall not be transported in the forms by means of vibrators. Consolidation of concrete shall be in conformance with ACI 309.

C. Protection:

1. Rainwater shall not be allowed to increase the mixing water nor to damage the surface finish. Concrete shall be protected from construction overloads. Design loads shall not be applied until the specified strength has been attained.

D. Bonding:

1. Before depositing new concrete on or against concrete that has set, the surfaces of the set concrete shall be thoroughly cleaned so as to expose the coarse aggregate and be free of laitance, coatings, foreign matter, and loose particles. Forms shall be retightened. The hardened concrete of joints shall be dampened, but not saturated, and then thoroughly covered with a coat of cement grout of similar proportions to the mortar in the concrete. The grout shall be as thick as possible on vertical surfaces and at least 1/2-inch thick on horizontal surfaces. The fresh concrete shall be placed before the grout has attained its initial set.

E. Embedded Items:

1. In addition to steel reinforcement, pipes, inserts, anchor bolts, and other metal objects as shown, specified, or ordered shall be built into, set in, or attached to the concrete. All necessary precautions shall be taken to prevent these objects from being displaced, broken, or deformed. Before concrete is placed, care shall be taken to determine that all embedded parts are firmly and securely fastened in place as indicated. They shall be thoroughly clean and free from paint or other coating, rust, scale, oil, or any foreign matter. No wood shall be embedded in concrete. The concrete shall be packed tightly around pipes and other metal work to prevent leakage and to secure

proper adhesion. Drains shall be adequately protected from intrusion of concrete. The inside surface of the condensate storage tank containment structure (if applicable) shall be sealed using Masterseal GP as manufactured by Master Builders Technologies, Ltd., Toronto, Ontario, or approved equal. The surface preparation and number of coatings shall be as recommended by the manufacturer

F. Bonding to Existing Surfaces:

1. Existing concrete surfaces that are to have new concrete bonded thereto shall be cleaned of all grease, oil, dust, dirt, and loose particles and coated with an epoxy bonding agent just prior to placing of the new concrete. Application of the bonding agent shall be as recommended by the manufacturer and the bonding agent shall be permitted to become tacky before the new concrete is placed. The bonding agent shall not be permitted to overlap or be spilled on the surfaces to be exposed after the work is completed.

G. Repair of Surface Defects:

1. General. Surface defects, including tie holes, shall be repaired immediately after form removal. The area to be patched and an area at least 6 inches wide surrounding it shall be dampened to prevent absorption of water from the patching mortar. The Engineer shall be notified prior to commencing repair operations.

2. Removal of Defective Concrete. All honeycombed, bug holed, and other defective concrete shall be removed down to sound concrete and patched. Edges shall be cut perpendicular to the surface or slightly under cut. Sand blast surfaces to receive repair.

3. Bonding Grout. Surfaces to be patched shall be thoroughly dampened and shall receive a coat of bonding grout brushed into the surface. Grout shall consist of 1 part cement to 1 part fine sand passing a No. 30 sieve. Grout shall be the consistency of thick cream.

4. Placing Patching Mortar. After the bonding grout begins to lose its water sheen, a premixed patching mortar shall be applied. Patching mortar shall be thoroughly consolidated into place and struck off so as to leave the patch slightly higher than the surrounding surface. It shall be left undisturbed for 1 hour to permit initial shrinkage and then finally finished.

5. Tie Holes. After being cleaned and thoroughly dampened, the tie holes shall be filled solid with patching mortar.

3.03 PROTECTING

A. Curing:

1. Immediately after form removal, all exposed surfaces, including slabs, walls, beams, and columns shall receive two spray coats of curing compound applied in accordance

with the manufacturer's recommendations. Exposed steel keyways and other embedded items shall be protected from the curing compound. Floor or slab concrete requiring a bond for special finishes may be cured by the wet burlap method.

2. Curing compound shall be uniformly applied to the surfaces to be cured, in a single coat, continuous film, at the rate of 1 gallon to not more than 200 square feet, by a mechanical sprayer. Two (2) complete coatings shall be applied. Apply second coat at 90 degrees from the first coat.

3. Curing compound shall be applied in accordance with manufacturer's instructions. Should the film become damaged from any cause within the required curing period, the damaged portions shall be repaired immediately with additional compound. Upon removal of forms, the newly exposed surfaces shall immediately be coated to provide a curing treatment equal to that provided for the surface.

B. Wet Burlap Curing Method:

1. Floor or slab concrete may be cured by the wet burlap method. Concrete shall be covered with a double thickness of burlap, cotton mats, or other approved material kept thoroughly saturated with water. Concrete shall be cured for a period of 7 days for normal Portland cement. Concrete poured in the dry shall not be submerged until it has attained sufficient strength to adequately sustain the stress involved nor shall it be subjected to flowing water across its surface until it has cured 4 days.

END OF SECTION

SECTION 11187

LANDFILL GAS FLARING SYSTEM

PART 1. GENERAL

1.01 DESCRIPTION

A. Work Included:

1. The work described in this section consists of furnishing all labor, materials, equipment, and incidentals necessary to furnish and field test the Landfill Gas Flaring System at Sacramento City Landfill, Sacramento, California as shown on the Contract Drawings and as specified herein, including all appurtenances to provide a complete system ready for operation.

2. The Landfill Gas Flaring System shall include the following four sub systems:

   a. Gas Handling System.

   b. Interconnecting Piping System.

   c. Vertical Ground Flare System.

   d. Control System.

3. All equipment and accessories shall have manufacturer's Shop Drawings approved by the City/Engineer prior to shipment and shall be tested in conformance with these Specifications prior to acceptance and final payment by the City.

4. The Contractor shall be responsible for furnishing all equipment and accessories as described in these Specifications and/or as noted on the Contract Drawings and as required for satisfactory operation of the system. The Contractor shall assume complete system responsibility, including warranty, for all equipment whether he is the manufacturer or not. The warranty does not extend to existing equipment, only the control interface of such.

5. The Contractor shall be responsible for all electrical wiring connections and operation and control of all equipment related to the Landfill Gas Flaring System.

6. Parts of equipment shall be amply proportioned for all stresses, which may occur during operation, and for any additional stresses, which may occur during fabrication, transportation, handling, and erection.

7. If necessary, modifications shall be made in the manufacturer's standard product to make it conform to the specific requirements of the Specifications and to requirements contained in regulations issued by public agencies. Such modifications shall be noted in Shop Drawing submittals.

8. Equipment shall include all production line improvements made to the delivery or Contract date. All equipment shall comply with applicable requirements of the standards of ASME, AGA, NFPA, and the Underwriters' Laboratories panels shall bear U.L. labels, as of the bid submittal date. Equipment shall not have been in service, except for shop tests, at any time prior to delivery. The equipment shall be furnished factory-assembled to the extent possible and ready for installation.

9. A brass or stainless steel nameplate shall be attached to each piece of equipment in a conspicuous place. The following information shall be plainly marked on the nameplate: name and address of the manufacturer, serial number, model number, and any other information necessary for complete identification.

1.02 SUBMITTALS

A. Submittals shall be made in accordance with Section 01300 - Submittals. In addition, the following specific information shall be provided:

1. Materials and Shop Drawings. Submittals shall include at least the following:

a. Certified Shop Drawings showing all-important details of construction, anchor plates for anchoring the skid to the concrete slab, dimensions, and weight. The flare manufacturer shall be responsible for the design of the anchor plates.

b. Descriptive literature, bulletins, and/or catalogs of the equipment.

c. A complete total bill of materials for all equipment.

d. A list of manufacturer's recommended spare parts.

e. The total weight of the equipment including the weight of the single largest item.

f. Complete performance data that will indicate full compliance with the Specifications; performance curves; calculations showing the equipment gas-flow and motor corrections required for operation at job-site elevation as specified under Design Criteria.

g. Complete control panel diagrams and elevations showing all components, wires, connections, and numbered terminals.

h. Complete electrical interconnect diagram showing all wires and terminals between the control panel and external devices.

i. All exceptions to the applicable requirements and Specifications provided in these Contract Documents.

B. Complete assembly, foundation and installation drawings, complete wiring diagrams, control panel layout and control schematics, together with detailed specifications, and data covering actual materials used, parts, devices, and other accessories shall be submitted.

C. An Operation and Maintenance (O&M) Manual shall be furnished in accordance with Section 01300 and the General Conditions for the LFG flaring system. The manual shall be prepared specifically for this installation and shall include all required catalog cuts, drawings, equipment list, descriptions, and information necessary to instruct operating and maintenance personnel who is unfamiliar with such equipment.

D. A factory representative, with a full knowledge of proper operation and maintenance, shall be provided for a minimum of two (2) 8-hour days to instruct representatives of the City and/or the Engineer on proper operation and maintenance of the LFG flaring system. If there are difficulties in operation of the equipment due to manufacturer's design or fabrication, additional service shall be provided at no additional cost to the City.

1.03 QUALIFICATIONS

A. The Landfill Gas Flaring System, including all ancillary equipment, shall be furnished by a manufacturer who is fully experienced, reputable, and qualified in the manufacture of the equipment to be furnished. The equipment shall be designed and fabricated in accordance with the best practices and methods. The manufacturer shall have experience in supplying equipment for the landfill gas handling systems, and shall have a minimum of five years experience in design and manufacture of this type of equipment and have a minimum five similar equipment installations operating successfully in the United States.

B. The Landfill Gas Flaring Systems shall be manufactured by Perennial Energy, Inc. of West Plains, Missouri, John Zink Company of Tulsa, Oklahoma, or approved equal.

1.04 DESIGN CRITERIA

A. Landfill Gas Blowers:

1. All equipment specified herein is intended to be standard equipment for use in a landfill gas handling system.

2. Blowers shall be designed for continuous operation in an outdoor environment and shall conform to the following requirement measured at Standard 14.7 psia and 68 degrees F condition:

Number required	2
Rated capacity each, scfm	600
Minimum capacity each, scfm	100
Site elevation, feet above MSL	50
Gas composition:	
Methane	20 percent - 50 percent
Carbon Dioxide	25 percent - 50 percent
Traces gases, ppm	0 - 70
Actual landfill gas pressure:	
Inlet, inches of water (vacuum)	70
Outlet, inches of water (pressure)	20

Landfill gas inlet temperature:	
Maximum, degrees F	130
Minimum, degrees F	60
Shaft speed, rpm	3,600
Nominal motor efficiency, percent	91
Minimum motor power factor, percent	87
Motor insulation:	Class F
Motor service factor	1.15
Motor horsepower (Max)	25
Noise at 3 feet from unit	85 dbA
LFG moisture content	100% Saturated

3. When volumetric capacity is reduced to the specified minimum, the blower under the specified inlet conditions shall not surge or overload the motor.

4. The blower recommended will be based upon data previously established by tests in accordance with the ASME Power Test Code for Centrifugal Blowers.

B. Vertical Ground Flare Systems:

1. The landfill gas vertical ground flare systems shall be designed to operate continuously at the following service:

Number required	1
Landfill gas flow rate, scfm	100 to 600
Btu loading, mm Btu/hour	3 to 18
Inlet temperature, degrees F	100 to 130
LFG moisture content	100 % Saturated
Barometric pressure, psia	14.7
Landfill gas composition range:	
Methane	20 percent to 50 percent
Carbon Dioxide	25 percent to 50 percent
Trace Gases, ppm	0 to 70
Site elevation	43 feet above MSL
Maximum Height of Stack, feet	35

2. The flare manufacturer shall guarantee the following performance requirements:

a. The above composition percentages shall be considered approximate due to the complexity of the gas generation and collection process. The flare shall be complete with adjustment features, which will allow odor-free operation of the flare under significant changes in gas composition.

b. The flare shall be capable of reducing odorous compounds such as hydrogen sulfide, mercaptan, and/or aromatics in the landfill gas to a non-odorous form by the combination of high temperature, excess combustion air, and retention time. Exhaust from the flare stack shall have no visible flame and no visible emissions.

c. The thermocouple used to measure combustion temperature shall be located at

a distance that is greater than the distance equivalent to 0.6 seconds downstream of the burner at the maximum flow. Flare shall be designed to operate at a minimum combustion zone temperature no less than the 3-hour average temperature (measured by the thermocouple mentioned above) as determined during the most recent complying source test minus 50 degrees F.

d. The emissions from the flare shall comply with all Sacramento Metropolitan Air Quality Management District (SMAQMD) emissions requirements as outlined in their Rules and Regulations. At a minimum, emissions from the flare shall not exceed the following values when the flare is operating within the designed Btu loading as specified in the Paragraph 1.04B above, without use of auxiliary fuel:

- Nitrogen Oxide (NOx) - 0.06 pound per million Btu.
- Carbon Monoxide (CO) - 0.20 pound per million Btu.
- PM10 – 7.35 pounds per million cubic feet of landfill gas.
- SOx – 10 lbs/day

NOx and CO emissions are based upon (HHV)

e. The landfill gas flaring system shall be capable of achieving a minimum weighted average destruction efficiency of > 99 percent of the total organic compounds (TOCs), > 98 percent of non-methane organic compounds (NMOCs) and >99 percent of methane per new AB 32 Methane Landfill Rule.

f. The landfill gas pressure loss through the flare at design flow (600 scfm) shall not exceed 10 inches w.c. as measured from the upstream side of the inlet gas valve to the outlet of the flare. The burner heads shall be designed to provide a sufficient pressure drop at minimum (100 scfm) flow and heat content conditions in order to maintain a stable flame and proper destruction.

1.05 APPLICABLE CODES AND STANDARDS

A. All equipment shall be manufactured in accordance with codes and guidelines as specifically detailed herein and in accordance with applicable portions of the following (latest edition):

1. Local Laws and Ordinances.
2. State and Federal Laws.
3. National Electrical Code.
4. National Electrical Manufacturers Association (NEMA).
5. Underwriters Laboratories (UL).
6. Uniform Building Code (UBC).
7. American National Standards Institute (ANSI).
8. American Society of Mechanical Engineers (ASME).
9. Institute of Electrical and Electronic Engineers (IEEE).
10. Instrument Society of America (ISA).
11. Industrial Risk Insurance (IRI).
12. Factory Mutual (FM).

13. National Fire Protection Agency (NFPA).

1.06 PRODUCT DELIVERY, STORAGE, AND HANDLING

A. All parts shall be properly protected so that no damage or deterioration will occur during a prolonged delay from the time of shipment until installation is completed and the units and equipment are ready for operation.

B. The equipment shall be delivered on site as fully assembled as transportation will allow. Factory-assembled parts and components shall not be dismantled for shipment unless permission is received in writing from the City.

C. Finished surfaces of all exposed openings shall be protected by wooden blanks, strongly built, and securely bolted thereto.

D. Each box or package shall be properly marked to show its net weight in addition to its contents.

1.07 WARRANTY AND GUARANTEES

A. The equipment manufacturer shall warrant the units being supplied to the City against defects in workmanship and material for a period of one (1) year from the date of equipment acceptance by the City. In the event that the equipment fails to perform as specified, the equipment manufacturer shall promptly repair or replace the defective equipment without any additional cost to the City (including handling and shipment costs).

PART 2. PRODUCTS

2.01 GENERAL

A. All equipment shall be designed and proportioned to have liberal strength, stability, and stiffness and shall be especially adapted for the intended service. Ample room and facilities shall be provided for inspection, repairs, and adjustments.

B. These Specifications are intended to give a general description of what is required, but do not cover all requirements of the equipment as offered. They are, however, intended to cover the furnishing, delivery, and field testing of all materials, equipment, and apparatus as required. Any additional auxiliary equipment necessary for proper operation of the proposed Landfill Gas Flaring System not mentioned in these Specifications or shown on the Drawings shall be furnished and installed.

C. At all levels of performance of each gas system, the sound pressure shall not exceed 85 dbA over a frequency range of 37.8 and 9,600 cycles per second. Measurement shall be made a distance of 3 feet from the outer face of the equipment. The equipment manufacturer shall certify that the equipment furnished for this project does not exceed the specified sound pressure. This written certification shall be submitted with the Shop Drawings.

D. One (1) enclosed flare base plate foundation template, constructed of 1/4” carbon steel plate for assisting in setting and installing the anchor bolts in the field, shall be furnished by the

flare manufacturer. The template shall be shipped prior to the flare; so that it can be utilized at the time the flare foundation is formed and constructed.

2.02 GAS HANDLING SYSTEMS

A. Blower and Motor Assemblies:

1. Blower. The blower unit shall be the multistage centrifugal type. Impellers shall be mounted on one shaft supported on each end by bearings mounted in the outboard bearing housings. The blower shall be built from parts cast in patterns from which previous units have been built and tested. Blowers shall comply with the design criteria as specified in Paragraph 1.04A of Part 1 - General of this Section. The blower shall be driven directly by the motor through a variable frequency drive (VFD). The VFD furnished for the blowers shall be as manufactured by ABB Inc. of New Berlin, WI, or approved equal.

2. Blower Housings. The housings shall consist of cast iron sections held securely between cast iron inlet and outlets heads with steel tie rods.

   a. No contact shall be made between the shaft rotor and the housing, other than through the bearings. Stuffing boxes shall be used as seals to insure no leakage of gas to the atmosphere or air into the landfill gas.

   b. The inlet and outlet connections shall be drilled and tapped flange pattern per ANSI 1316.1, 125-pound, and shall be an integral part of the heads.

3. Impellers:

   a. The impellers shall be one piece cast aluminum alloy, keyed to the shaft and held by a locknut. Hubs of the impellers shall butt against each other directly or through one-piece metal spacers. There shall be ample clearance and tip speed shall not exceed 375 FPS.

   b. Impellers shall be precisely machine balanced. Vibration shall not exceed 2 mils in the vertical plane measured at the blower bearing housings.

4. Diffusers. Diffuser sections, which receive the gas from the impeller and guide the gas to the next impeller, shall be provided. The diffusing vanes shall be an integral part of the sections.

5. Shaft. Each shaft shall be made of high-grade carbon steel of sufficient diameter to operate below first critical speed.

6. Bearing Housings. Each blower shall be provided with two antifriction bearings. It shall be possible to replace bearings without disconnecting any piping or disassembling the compressor casing. Both inlet and outlet bearings shall be sized for a minimum expected life of 10 years continued operation as defined by ABMA B-10 standards.

7. Casing Drains. Each blower stage shall be provided with 3/8-inch diameter casing drains with manual shut-off valves. A ½-inch condensate drain line shall be provided at each blower for draining condensate from the blower to the moisture separator (see schematic flow diagram on the Contract Drawings)

8. Internal Lining. The blower internals shall be furnished with a factory applied Bisonite, Kynar, or phenolic coating minimum 6 mils thick to provide resistance to corrosion by landfill gas. The coating shall be applied to all parts of the blower, which come in contact with the landfill gas stream.

9. Motor. Each blower shall be direct-coupled to a horizontal 460 volt, 3-phase, 60-hertz motor. The directly coupled motors through the variable frequency drives (VFD) mounted adjacent to the flare panel shall drive the blowers. The motor rpm shall be 3,600. The minimum horsepower shall be as specified in Paragraph 1.4A above; however, the blower manufacturer shall be responsible for selecting the proper motor size to suit his equipment. The squirrel-cage induction motor shall be totally enclosed fan cooled (TEFC), and UL-approved. The motor shall have a cast-iron frame and copper windings. Motor shall be rated at 104 degrees Fahrenheit ambient with not more than 131 degrees Fahrenheit rise. Bearings shall be of the antifriction type with an ABMA L-10 life rating of not less than 25,000 hours.

10. Flexible Couplings and Drives. The blowers shall be connected to the drivers with a suitable flexible coupling. The installing contractor shall check and adjust the alignment of the couplings and drives in accordance with the instructions of the blowers' manufacturer to a tolerance of plus or minus 2 mils. Couplings shall be covered with base-mounted aluminum or non-sparking metallic guard.

11. Bases. Enamel painted rolled steel bed plates of suitable size for mounting blowers and drivers shall be furnished by the blower manufacturer. The blower and motor shall be carefully aligned and then bolted in place. Suitable vibration isolation pads shall be provided under the steel bedplates of the units. If the blower manufacturer intends to use a structural steel frame in lieu of the rolled steel plate for the blower base, it shall be coated with industrial enamel paint.

12. The blower-motor assemblies shall be located, installed, and plumbed on the gas handling skid, with a continuous galvanized ¼-inch thick galvanized steel checker plate, either bolted or welded to the top of the skid.

13. Auxiliary Equipment:

    The following auxiliary items shall be provided along with the blowers:

    a. A 4-1/2-inch-diameter bellows-type vacuum gauge shall be mounted at the inlet of each blower. The range of the vacuum gauge shall be 0 to 100 inches of water, and the gauge shall read "INCHES OF WATER." Graduations shall be at intervals of 1 inch of water.

b. A 4-1/2-inch-diameter bellows-type pressure gauge shall be mounted at the outlet of each blower. The range of the pressure gauge shall be 0 to 50 inches of water, and the gauge shall read "INCHES OF WATER." Graduations shall be at intervals of 1 inch of water.

c. Dial-type temperature gauges shall be provided at the inlet and outlet of each blower. The gauge shall range from 0 to 200 degrees F.

d. The manufacturer of the blowers shall provide flanged expansion joints concentric reducers, of sizes shown on the Contract Drawings, on the inlet and outlet of each blower. The flanged expansion joints shall be constructed of synthetic rubber with synthetic fiber reinforcement. The flanged expansion joints shall the pressure ratings of +20 psig and -20 inches of mercury. They shall be capable of withstanding the temperatures up to 250^0F. The split retaining rings shall be made of galvanized steel. The split rings shall conform to the requirements of 125-pound ANSI flanged fittings.

e. The manufacturer of the blowers shall provide one calibrated ammeter for each blower. The surge range shall be clearly indicated on the ammeter. The volume of gas in standard cubic feet per minute (scfm) shall be expressed as a function of ampere input (i.e., the ammeter shall have two scales: amps and scfm). The point of full load amps shall be clearly indicated on the ammeter.

14. Blower Controls:

a. Blower-motor starters and controls shall be as provided as shown on the Contract Drawings.

15. Experience:

a. Blowers shall be manufactured in the United States. Blower manufacturers shall have a minimum 5 years experience in the design and manufacture of this type of equipment and have a minimum of 25 operating installations in the United States.

b. Acceptable Manufacturers:

(1) Gardner-Denver Blower Division
100 Gardner Park
Peachtree city, GA 30269
(800) 543-7736

(2) Continental Blowers, L.L.C.
Liverpool, New York 13088
(315) 451-5410

(3) Houston Service Industries, Inc.
7901 Henson Road
Houston Road, TX 77061
(800) 725-2291

(4) National Turbine Corporation
374 Northern-Lights Drive
Syracuse, New York 13212
(315) 455-5591

2.03 INTERCONNECTING PIPING SYSTEMS

A. Valves:

1. Butterfly Valves:

a. All valve shafts shall be connected to operators by use of keys and keyways. The use of compression or friction connection will not be accepted.

b. The butterfly valves, for low-pressure/vacuum landfill gas services, shall have cast-iron wafer-style valve body with contoured 316 stainless steel disc, Type 316 stainless steel stem, Acetal stem bushing, and Viton replaceable resilient seat. Valves shall be bubble-tight at 150 psi differential pressure and shall be suitable for installation between ANSI 125-pound flanges.

c. All butterfly valves shall open left or counterclockwise when viewed from the stem. Manual valve operators shall be worm gear, with or without chains, as shown on the Contract Drawings. All operators shall have adjustable mechanical stop limiting devices to prevent overtravel of disc. Should an adjustment of the disc be required to maintain a bubble-tight seal, this adjustment shall be made externally without removing the operator housing cover. The operator shall be designed such that all adjustments can be made under pressure and without the possibility of dirt getting into the operator lubricant. Any adjustments through the lower shaft will not be acceptable. Operator components shall, at the extreme operator positions, withstand without damage a pull of 200 lbs for hand-wheel or an input torque of 300 ft-lb for operating nuts.

d. Interior of valve body and valve disc except for valve seat and stainless steel valve seat ring shall be coated with a fusion bonded, thermosetting epoxy coating in accordance with AWWA C550, latest revision. Coating shall be holiday-free with a minimum thickness of 12 mils. Surfaces shall be clean, dry, and free from rust and grease before coating.

e. All butterfly valves shall be manufactured by Demco/Copper Cameron Valves, DeZurik, Keystone Valves U.S.A., Kennedy Valve Manufacturing Company, or approved equal.

f. All exterior surfaces of butterfly valves shall be clean, dry and free from rust and grease before coating. The exterior ferrous parts of all valves shall be shop primed at the factory with one coat, minimum dry film thickness 1.5 mils, of a primer with rust-inhibitive pigments and synthetic resins. Following

installation, above-ground valves shall be finish painted. The City shall select the color of the paint.

2. Solenoid Valves:

   a. Solenoid valves shall be 2-way type for normally closed operation designed for not less than a 150 psi water working pressure. The valves shall have forged brass bodies with NPT threaded ends, Buna N seals/disks, and NEMA 4 solenoid enclosures. The valves shall operate on 120 VAC power, shall have threaded conduit hubs, standby manual operators, and shall not require a minimum operating pressure differential for steady operation. The valves shall be manufactured by Automatic Switch Company or approved equal.

3. Check Valves:

   a. Check valves shall be of flapper type. The valves shall have cast aluminum lightweight body, 316 stainless steel internals, Viton or Teflon sealing member materials, and 316 stainless steel spring materials. The valves shall be flanged and shall be faced and drilled to 125-pound ANSI dimensions.

   b. Check valves shall be Model 5004-CAL as manufactured by Techno Corporation of Eire, Pennsylvania, or approved equal.

B. Piping:

1. Piping. All piping on the gas handling system skids shall be Schedule 40 6061-T6 or 6063-T6 aluminum. The same specification applies to tees, elbows, wyes, flanges, and other pipe fittings. All flanges shall conform to ANSI 125-pound specifications. All welding of aluminum piping and appurtenances shall conform to AWS D1.2 specifications.

2. The gaskets shall be full-face rubber, 1/16 inch to 1/8 inch in thickness, and shall meet the requirements of ANSI Specification A21.11.

3. Where shown on the Drawings or as required, pipe and fittings shall be drilled and taped to receive drainage or other piping or plugs. All holes shall be drilled accurately at right angles to the axis of any pipe or fitting.

4. All piping and fittings shall be supported in such a manner as to prevent any strain being transmitted between sections and connected equipment and appurtenances. Release of any joint shall result in no transverse piping movement and shall allow easy removal and replacement of any piping component. Not all required supports are shown on the Contract Drawings.

5. In lieu of aluminum piping, the Contractor can furnish stainless steel piping. Stainless steel piping shall be minimum schedule 10, annealed, conforming to the requirements of ASTM A312, Grade TP 304L or TP 316, low carbon.

6. Flexible connectors shall be bellows type, Series 2500 as manufactured by Hyspan

Precision Products, of Chula Vista, CA. or approved equal.

C. Landfill Gas Flowmeter:

1. The landfill gas flowmeter(s) shall comprise of a single point FM approved mass flowmeter element/transmitter with display, suitable for installation on a 6-inch diameter stainless steel pipe, and a mass separate flowmeter computer/ transmitter with a 4-20 mA output. The mounting fittings, for the flowmeter and the transmitters, shall be of 3/4-inch S.S. The flowmeter shall be Model No. 454 FT flowmeter and a 155JR flow computer as manufactured by Kurz Instruments Inc., or approved equal.

2. The landfill gas flowmeter(s) shall provide a 4-20 mA signal of flow of the landfill gas for connection to the remote indicator. The meters shall be factory calibrated for landfill gas (50 percent methane, 50 percent carbon dioxide) for a range of 600 to 100 scfm. The flowmeter shall be provided with a flow rate indicator (scfm), totalizer, and recorder to be located as shown on the Contract Drawings.

3. The recorders shall include a NEMA 4X enclosure, which the Contractor shall install on the inside flare control panel enclosure, as shown on the Contract Drawings.

4. The totalizer panels shall be installed in the flare control panels.

5. The strip chart recorder (digital readout) shall be manufactured by Yokogawa, or approved equal. LFG flows, flare-operating temperatures, time, and date shall be printed in figures every 15 minutes on the chart.

2.04 VERTICAL GROUND FLARE SYSTEM

A. Equipment

1. The landfill gas vertical ground flare shall have the following items as minimum:

a. Burners and burner chamber for landfill gas.

b. Stack.

c. Automatic landfill gas and propane gas safety shutoff valves.

d. Flame arrestor.

e. Control system, with a programmable logic controller, SLC-500 PLC, 24 inputs, (120V, 60 Hz), 16 outputs relay (120V, 60 Hz), manufactured by Allen Bradley or approved equal.

f. A complete propane gas pilot system, including two 5-gallon tanks, piping, valves, electric igniter and pressure regulator.

g. All controls, panel, and wiring, including exit gas temperature control.

h. Access manhole at the front of the unit for inspection and maintenance of burners.

i. Flame view ports.

j. Time clocks mounted inside the flare control panel shall be provided for automatic starting and stopping of the flare operations on preset time, for 7 days per week with a 1-hour minimum duration.

k. Protective screen to prevent accidental burns.

l. A set of sampling ports shall be spread horizontally and located at least 2 feet above the flame zone and at least 3 feet below the top of the flare shroud. Sampling ports shall be installed 90 degrees apart, and shall consist of 4-inch couplings with plugs.

m. Eye bolts shall be provided above each sampling port to properly support sampling probe and trains.

2. Flare Stack:

a. The circular flare stack shall be constructed of carbon steel, with a minimum thickness of 1/4 inch.

b. The flare stack shall be designed to minimize the danger of accidents to operating and maintenance personnel.

c. The landfill gas burners shall be made from 300 series stainless steel with minimum thickness of 16 gauge. The manifold shall be of a sectional header arrangement to accommodate the removal and repair of individual headers.

d. Refractory shall be 4 inches thick (minimum), lightweight, castable, insulating, and shop-installed in the ignition tube and stack. Refractory lining shall have 1/4-inch (minimum) 304 stainless steel anchors spaced two per square foot. Refractory shall be rated for the design operating temperature and precured a minimum of 48 hours. Refractory shall not require warm-up or cool-down procedures to avoid refractory damage. The flare may be subject to sudden startup after a prolonged idle period during which the refractory is exposed to weather conditions. In addition, sudden shutdown may occur after prolonged operational periods. It is required to have a refractory lining at the bottom of the flare to protect the structural concrete.

In lieu of refractory lining, ceramic fiber blanket will be acceptable as the flare stack insulation. Three layers of ceramic fiber insulation blanket shall be provided. Two 1-inch-thick layers of ceramic fiber blanket of 8 lbs/ft^3 density shall be installed, using overlap outer face construction methods, over one 2-inch-thick layer of ceramic fiber blanket of 4 lbs/ft^3 density. Insulation shall be attached to stack wall and floor with Inconel 600 series, or approved equal, studs and washers. Prior to the installation of ceramic fiber blanket, internal

surfaces of the stack shall be thoroughly cleaned and painted with rust-inhibitive, high-heat resistant paint.

A rain guard shall be provided at the top of the flare stack to prevent water seeping into the insulation.

e. The flare stack shall be provided with lifting eyes near the top of the flare to permit the lifting and upright suspension of the flare at these points. The flare shall arrive on the site with internal supports necessary to permit the lifting of the flare by the lifting eyes without damage to the refractory or other flare components.

f. The flare stack shall be assembled at the factory to the extent possible. Instructions for any unavoidable on-site assembly shall be provided to the City per submittal requirements.

g. The flare stack shall be installed on the concrete slab on pile foundation as specified by the structural engineer. All necessary support angles and anchor bolts to install the flare on the concrete slab shall be furnished by the flare manufacturer. The landfill gas supply pipe, and pilot light pipe, connections furnished with the flare shall extend a minimum of 1 foot beyond the outermost dimension of the flare.

h. The flare stack shall be provided with an access ladder to the height of the top of the thermocouple. The access ladder shall be provided with anti-climb guard and a head shield over the ladder at the top of the flare.

i. The control panel shall contain all control components not mounted on the flare.

j. In selecting and/or accepting equipment for installation at the project site, the City will assume no responsibility for injuries or claims resulting from failure of the equipment to comply with applicable national, state, and local safety codes or requirements, or the safety requirements of a recognized Agency in effect at the time of final review of the Shop Drawings, or failure due to faulty design concepts or defective workmanship and materials. Equipment manufacturers shall be held responsible for compliance with the requirements included in this paragraph.

k. Shell skin temperature shall not exceed 250 degrees F under maximum Btu loading conditions.

l. All hot surfaces with operating temperatures greater than 140 degrees F and which may inadvertently be touched, backed into, or otherwise contacted by operators or maintenance personnel shall be provided with a protective expanded steel or mesh screen to prevent accidental burns. The protective screen shall be securely attached to the flare, and shall extend outward a minimum of 6 inches from all hot surfaces. The protective screen shall extend completely around the flare, from a maximum height (at the base) of 6 inches

above grade to a minimum height (at the top) of 7 feet above grade. The screen shall have a minimum 75 percent open area, with holes not exceeding 3 inches in maximum dimension. The protective screens shall be comprised of a minimum of four sections, each of which shall be easily removable from the exterior, especially at those areas where regular maintenance or operational adjustments may be required.

m. Alternative methods for the prevention of accidental burns may also be proposed by the Contractor. Such proposals shall include a complete description of materials and construction methods, and shall address concerns regarding burn protection and accessibility. Hand rails shall not be accepted as an alternative method.

B. Controls:

1. All electrical components shall be UL approved. The controls shall be designed for 120-volt AC operation. All switching shall be accomplished in the “hot” circuit. The electronic flare control system shall be supplied with the following characteristics and components:

a. The control system shall accomplish a safe start component check during each start, which shall prevent the delivery of landfill gas into the flare unless a sufficient pilot light has been provided to ignite the landfill gas. The control system shall also prevent the discharge of uncombusted landfill gas.

b. Safety shutdown after automatic restart shall be accomplished within 4 seconds following a flame failure or the opening of any running interlock.

c. Automatic shutdown of the system shall be accomplished when the design Btu loading has been exceeded, to protect the internal insulating lining of the flare shell. The flare shall shut down automatically when the temperature drops below 1400^0 F

d. The local alarm panel shall indicate flare shutdown.

e. The pilot and main flames shall be monitored by a single ultraviolet-sensitive flame scanner, which shall not be actuated by hot refractory.

f. The flame detection scanner and amplifier shall be repetitive self-checking.

g. The scanner shall mount on and sight through a 1-1/2-inch standard pipe, reduced to 1-inch standard pipe. The scanner mount shall be positioned to permit the scanner to sense both the pilot flame and the primary flame at low-flow conditions. However, the manufacturer may opt to provide two scanners, in lieu of one, to individually sense the pilot flame and the primary flame.

h. The scanner shall be suitable for operation up to 200 degrees F, as measured on the mounting hub.

i. The landfill gas inlet shall be equipped with a pneumatic, automatic, fast-closing (within 5 seconds), safety shutoff valve so that landfill gas shall flow to the combustion chamber through the fuel pipe only after the pilot is proven. A system of burner heads shall be located inside the combustion chamber to properly distribute landfill gas for efficient combustion.

j. The pilot gas fuel train shall include double block solenoid valves.

k. All electrically operated valves shall close upon loss of electrical power.

l. Operator interface. The control system shall be accomplished with a programmable logic controller, SLC-500 PLC, with adequate number of inputs, and outputs to operate the system specified, manufactured by Allen Bradley, KOYO –Automation Direct, or approved equal.

m. Time clocks mounted inside the flare control panel shall be provided for automatic starting and stopping of the flare operations on preset time, for 7 days per week with a 1-hour minimum duration.

2. The flare shall be provided with an adequate number of exit gas temperature control sensors (thermocouples) and ports. The number of ports for mounting the temperature sensor shall be determined by the manufacturer based on the flare capability and quality and quantity of gas expected. All of this information shall be submitted during the Contractor's first submittals of the Shop Drawings for the Flare. One of the sensors shall be located approximately 3 feet below the top of the flare stack. The thermocouple tube protruding into the flare shall be high-temperature stainless steel series Inknel made by Willon Industries, Telephone (818) 579-0268, or approved equal.

3. The control panel and switch board shall be suitable for slab mounting. All necessary brackets shall be furnished. The panel shall be hinged, dust-tight, and weatherized NEMA 12/3R. Weather proof rain/sun shield, extending a minimum of 3 feet over door side, shall be provided over all enclosures. Lights shall be provided under the overhead shield. The panel shall contain PLC, all components, devices, and instruments not mounted on the flare, including the following:

a. Flare start-up selector switches and push buttons.

b. Emergency shut-down push button.

c. A "hand-off-auto" selector switch shall also be included in each motor control circuit.

d. Indicating lights for power on, purging on and complete, pilot gas on, landfill gas on, flame proved, blowers on and fail, LFG inlet valve fail, flare failure, flare high and low temperatures, propane low pressure, and high oxygen. These are to be provided on touch screen (HMI).

e. A push button and a lamp test circuit shall be provided to test the condition of

each indicating lamp.

f. Pilot light ignition system.

g. Adjustable pilot fuel valve timer (0 to 15 minutes).

h. Combustion safeguard relay.

i. Elapsed timers and ampere meters for blower motors.

j. Continuous temperature indicator and controller.

k. Strip chart recorders (digital type) for flare operating temperature, LFG flow to flare, the flare operating temperature, LFG flow, time and date shall be printed on the strip chart at every 15-minute interval. Yokagawa FX 106 digital strip recorder or equal.

l. Programmable controller and interfaces. The interface shall be at a minimum 6” color touch screen

m. Auto dialer.

n. Mass flow computer totalizer.

o. Interlocking relay contacts for controlling the blowers through VFDs.

p. Relay contacts for remote alarm auto dialer.

q. Control circuit fuses.

r. Name plates.

s. Terminal strips.

t. A 20 amp, 110 volt duplex utility outlet.

4. Interlocking relay contacts shall be provided to de-energize all blowers if the flare flame is lost.

5. A temperature controller with thermocouple shall operate an integral motor-driven air inlet damper(s) assembly to maintain the exhaust gas temperature as measured by the temperature sensors within 10°F of the temperature set point. The temperature set point shall be field-adjustable.

6. Control System Operation. Provide the required programmable logic control, relays, field devices, and field components to implement the following control operations

and features:

a. System Startup. System startup shall begin with a time delay cycle to evacuate any fugitive hydrocarbons from the flare enclosure. After purge is completed, the pilot shall be lit by use of propane gas, pilot gas solenoid valve, and spark plug ignition. Provide ignition transformer, pilot spark plug, and ignition timer. Upon proving the pilot flame by a self-checking flame scanner, the landfill gas (electric automatic) valve shall be opened and the landfill gas blower(s) shall be started allowing landfill gas to flow to the flare enclosure allowing the use of the landfill gas for system warm-up.

   After the starting of the blower and the landfill gas (pneumatic) valve is opened, the pilot gas solenoid valve shall then shut off to limit propane gas usage. If a flame is still sensed on the main burner, the system shall continue operation; if not, it shall shut down on flame failure.

b. Temperature Control (Air). The unit temperature shall be maintained by automatically adjusting electric actuated air damper(s), opening the dampers to reduce the flue gas temperature by adding quench air. Provide an automatic temperature controller, two compatible damper operators, and temperature element to operate the analog control loop. Provide a temperature recorder on the control panel to continuously record the flare exit gas temperature.

c. Automatic Start/Restart. In the automatic mode, the unit shall automatically start when power is applied. If the unit shuts down for any reason except high stack temperature, the auto mode shall allow the unit to attempt to purge and restart for a specified time period. A remote signal is sent if the unit fails to restart.

d. Pressure Control. Provide a pressure regulator on the pilot gas line. Provide a pressure gauge on both the pilot gas line and enriched fuel line downstream of the automatic valves.

C. Flame Arrestor:

1. Flame arrestor shall be suitable for installation on line containing saturated LFG and shall be of the size shown on the Contract Drawings.

2. Flame arrestor shall have 125-pound ANSI flanged connections.

3. The housing construction shall be aluminum. The bank assembly shall be all aluminum and shall be so arranged for easy removal from the housing to facilitate inspection and cleaning. The net free area through the bank assembly shall not be less than four times that of the corresponding size pipe. All grids of the bank shall be arranged for individual removal. The flame arrestor shall be Groth Equipment Corporation Model 7628, Varec Model 5010E, or approved equal.

D. Automatic Telephone Dialer:

1. General: The system shall receive input from the various monitored items in the form of a change in the status of a dry contact. Upon such change, the system shall automatically dial up to sixteen pre-selected phone numbers. When answered, the system shall send voice messages reporting the specific alarm condition. The system shall also be capable of reporting the status of all monitored items upon receipt of an inquiry phone call.

2. The system shall make provisions for the following input alarms:

   a. Inlet shut-off valve failure.
   b. Main flame failure.
   c. Blower No. 1 failure.
   d. Blower No. 2 failure.
   e. Flare high temperature failure.
   f. Flare low temperature failure.
   g. Electrical System shut-down.
   h. Spare.

3. The automatic telephone dialer shall be a self-contained, solid state device. The dialer shall continuously monitor the presence of AC power and the status of up to eight independent N.O. or N.C. contact inputs.

   Each contact input channel shall be keyboard programmable as follows: alarm on open circuit, alarm on closed circuit, or no alarm (status report only on inquiry). Alarm or status shall be reported utilizing a solid state used recorder high fidelity voice. No tape or mechanical voice reproduction devices shall be used.

   AC power failure or violation of alarm criteria for any input shall cause the unit to go into alarm status and begin dial-outs and optional local announcements. Upon initiating an alarm call-out, the system shall speak only those channels currently in alarm status.

   On phone inquiry or during on-site status check, a warning message shall be provided if no dial-out phone numbers are entered, or if the alarm switch is disabled, or if backup battery charge is low, or if AC power is off or has been off since last reset.

4. Phone Link: The dialer shall be FCC approved. It shall operate on a standard dial-up rotary pulse or Touch Tone^{R} telephone line and shall be capable of calling from one to sixteen phone numbers, each up to 60 digits in length and shall be compatible with the RACO Cellularm option for cellular phone connection/dial out functionality. Dedicated or leased phone line shall not be required.

5. Programming Capability: Pre-programmed speech shall provide entry guidance and confirmation of programmable features. Coded programming shall provide direct access to specific programmable items via appropriate function codes.

Both front panel and remote programming capability shall be provided for all functions. The user shall be permitted to selectively read channel status and to selectively read and alter any user entered speech messages or parameter programming from any Touch Tone[R] phone.

The following parameters shall be alterable from their default values via keyboard entry at the dialer or remotely from any Touch Tone[R] phone:

a. Messages - Alarm and normal messages for each channel shall be user programmable via solid state voice recording. Permanent resident factory recorded messages shall be included to support user programming and to provide default warning messages which will allow the unit to be fully functional even when no user messages have been recorded.

b. Alarm response delay - Each alarm channel response time shall be individually programmable 0.1 - 999.9 seconds. Default shall be 2.0 seconds. Power out response time shall be separately programmable.

c. Delay between alarm dial-outs - Shall be programmable 0.1-99.9 minutes. Default shall be 2.0 minutes.

d. Input alarm criteria - Each digital channel shall be independently keyboard configured for OPEN/CLOSED contact alarm or “NO ALARM.” Default shall be open circuit alarm.

e. Built-in microphone - Shall be programmable ON/OFF.

f. Phone dialing mode - Shall be able to connect to local cellular network using RACO Cellularm technology.

g. Phone numbers - Sixteen phone numbers shall be programmable with each phone number up to 60 digits in length. Pauses and DTMF tones shall be provided for pager communication, etc.

h. Alarm Call Grouping - Shall be programmable to selectively call the appropriate phone number according to current alarm(s).

6. Power and Memory Backup: Normal power shall be 105-135 VAC, 15 Watts maximum. An integral gel cell rechargeable battery shall be furnished with built-in charger of the precision voltage controlled type. A “trickle charger” shall not be supplied. Battery backup times shall be 20 hours.

   Even if all power is removed, user-entered programming shall be kept intact for up to 10 years from date of shipment.

7. Construction: An enclosure shall be NEMA 4X. The autodialer shall be mounted in the flare control panel.

   a. A cable connector shall be provided for voice output to a local amplifier.

b. Gas tube and solid state surge protection shall be integrally incorporated on the circuit board for all inputs including power, phone, and signal lines. Externally mounted protectors shall not be acceptable substitutes.

c. The dialer shall be suitable for a maximum environmental temperature of 130EF at the enclosure.

8. Automatic dialer - shall be Verbatim Model VSS-8C with Cellularm option, as manufactured by RACO Manufacturing and Engineering Company.

PART 3. EXECUTION

3.01 INSTALLATION

A. The LFG flaring system shall be installed in strict accordance with the manufacturer's instructions and recommendations in the location shown on the Contract Drawings.

B. Anchor bolts shall be installed accurately with the foundation template, furnished by the flare manufacturer, at the time the concrete is poured. Continuous inspection is required for anchor bolts installation and concrete pour.

C. The Contractor shall retain the services of the manufacturer or the manufacturer's designated factory-trained representatives for installation of the flaring system, including all controls or accessories.

D. Startup and debugging shall be considered completed when the manufacturer and Contractor have demonstrated that the flaring system is operating optimally and without mechanical/electrical and instrumentation problems. Debugging and startup of the equipment shall not be considered part of the erection or installation and; therefore, all startup and debugging efforts will be provided at no additional cost to the City nor will the time count against the manufacturer or his representative's required number of days. The City /Engineer shall be the sole judge as to whether the manufacturer and Contractor have completed startup and debugging.

E. The Contractor shall submit a certificate from the equipment manufacturer stating that the installation of the equipment is satisfactory, that the equipment is ready for operation, and that the operating personnel have been suitably instructed in the operation and care of the system.

3.02 INSPECTION AND TESTING

A. General:

1. A factory representative shall be provided for two (2) days and shall have complete knowledge of proper operation and maintenance to inspect the final installation and supervise the test run by the equipment.

2. Experienced factory-trained personnel, tools, and testing equipment shall be provided as required to perform the installation of the equipment furnished by the

manufacturer, as well as test, calibrate, and start up the complete flaring operation and gas flow control as described on the flaring system operation requirement.

3. Experienced factory-trained PLC personnel and programming devices shall be provided as required to perform the programming or reprogramming to meet the actual flaring system operation and variable flow control during testing and start up as described on the flaring system operation requirement.

4. Field tests shall not be conducted until such time that the entire installation is complete and ready for testing.

B. Field Testing:

1. Upon completion of all the mechanical and electrical work, the Contractor shall conduct testing as specified herein to demonstrate that the equipment performs in accordance with all specifications.

2. The Contractor shall perform initial testing of the equipment, insuring to himself that the tests listed in the Demonstration Test paragraph below can be satisfactorily completed.

3. The Demonstration Test shall demonstrate that all items of these Specifications have been met by the equipment as installed and shall include, but not limited to, the following tests:

a. That the LFG flaring system has been properly installed and all parts are in correct alignment.

b. That the system satisfactorily operates continuously for 14 days.

c. That there are no mechanical or electrical defects in any of the parts.

d. That the controls perform satisfactorily as to automatic starting and stopping, and remote control of blowers and associated equipment.

e. Alarm call outs

C. Performance Test:

Within sixty (45) days of successful completion of the demonstration test, the Contractor shall conduct a performance test on the LFG flaring system in accordance with approved test procedures (prepared by the independent laboratory selected by the Contractor). The test procedure shall include preparation and submission of testing protocol to the SMAQMD for their review and approval. The tests shall be conducted by an independent testing laboratory with at least three years of experience in successfully conducting such tests. The tests shall include, but not limited to, testing of inlet gas to the flare and flare exhaust for the following:

1. Methane and methane destruction efficiency.

2. Total non-methane organics (NMOCs).

3. Oxides of nitrogen (exhaust only).

4. Carbon monoxide (exhaust only).

5. Total particulates (exhaust only).

6. Hydrogen sulfide and total reduced sulfur.

7. Sulfur oxides (exhaust only).

8. Reactive organic compounds.

9. Toxic air contaminants including, but not limited to, benzene, chlorobenzene, dichlorobenzene, 1,2-dichloroethane, 1,1-dichloroethene, dichloromethane, tetrachloroethylene, tetrachloromethane, toluene, 1,1,1-trichloroethane, trichloroethylene, trichloromethane, vinyl chloride, and xylene isomers.

10. Carbon dioxide.

11. Oxygen.

12. Nitrogen.

13. Moisture content.

14. Exhaust temperature at the time of the test and exhaust temperature recorded by the sensor required by the permit.

15. Flow rate.

16. Energy content of landfill gas.

If the test results show that the flare has failed to comply with the specified emission criteria, it will be the Contractor's responsibility to make all modifications and/or adjustments to the flare necessary to meet the emission criteria. After all such modifications and/or adjustments, the performance test on the flare shall be re-conducted to demonstrate compliance to the specified emission criteria. The costs of modifications and/or adjustments to the flare and performance tests shall be borne by the Contractor.

END OF SECTION

SECTION 15012

HIGH-DENSITY POLYETHYLENE (HDPE) PIPING

PART 1. GENERAL

1.01 DESCRIPTION

A. Work Included:

1. The work described in this section consists of furnishing all labor, materials, equipment, and incidentals necessary to install high density polyethylene (HDPE) piping and pipe fittings for the LFG connection header from the new flare pipeline to the existing operational flare as shown on the Contract Drawings and specified herein. Please note that existing HDPE pipe that removed during demolition activities may be able to be re-used for HDPE piping installation at the discretion of the City and/or Engineer.

B. Related Work Described Elsewhere:

NOT USED

1.02 SUBMITTALS

A. Submittals shall be made in accordance with Section 01300 - Submittals. In addition, the following specific information shall be provided:

1. A statement, in writing, from the pipe manufacturer, stating that he is listed with the Plastic Pipe Institute as a qualified extruder for polyethylene resin being used to manufacture the pipe for this project.

2. Catalog information confirming the pipes and fittings conform to the requirements of the specifications.

3. Certification and Test Reports. The Contractor shall submit to the Engineer a manufacturer's certification and test reports as follows: That the HDPE pipe was manufactured from resins in compliance with these Specifications. The certificate shall state the specific resin, its source, and the specific information required by ASTM 1248. The pipe shall not contain recycled compound except that generated in the manufacturer's own plant from resin of the same specification from the raw material. The pipe shall be homogenous throughout and free of visible cracks, holes, foreign inclusions, or other deleterious defects and shall be identical in color, density, melt index, and other physical properties.

4. The HDPE pipe manufacturer shall provide certification that stress regression testing has been performed on the specific product. This stress regression testing shall have been done in accordance with ASTM D-2837, and the manufacturer shall provide a

product supplying a minimum hydrostatic design basis (HDB) of 1,600 psi, as determined in accordance with ASTM D-2837. The manufacturer must warrant the pipe to be free from defects in material and workmanship in accordance with ASTM D-3350 and F-714.

1.03 DAMAGE CONTROL

A. Transportation. Care shall be taken during transportation of the pipe that it is not cut, kinked, or otherwise damaged.

B. Handling Pipe Lengths:

1. Ropes, fabric, or rubber-protected slings and straps shall be used when handling pipes.

2. Chains, cables, or hooks inserted into the pipe ends shall not be used. Two slings spread apart shall be used for lifting each length of pipe. Pipe or fittings shall not be dropped onto rocky or unprepared ground.

C. Storage. Pipes shall be store on level ground, preferably turf or sand, free of sharp objects which could damage the pipe.

1. Stacking of the pipe shall be limited to a height that will not cause excessive deformation of the bottom layers of pipes under anticipated temperature conditions.

2. Where necessary due to ground conditions, the pipe shall be stored on wooden sleepers, spaced suitably and of such width as not to allow deformation of the pipe at the point of contact with the sleeper or between supports.

1.04 EXCAVATION AND BACKFILL

A. All excavation (if required) in the preparation of pipe bedding shall be performed in accordance with the requirements of Section 02220 - Excavation, Backfilling, and Compaction.

B. During trenching and backfilling, the Contractor shall comply with the safety requirements of Section 01030 - Safety Requirements.

PART 2. PRODUCTS

2.01 PIPING MATERIALS

A. The polyethylene pipe shall be high performance, HDPE pipe, conforming to ASTMD-1248 (Type III, Class C). Minimum cell classification values shall be PE345434C, as referenced in ASTM D-3350. The SDR for each type of pipe shall be as shown on the Contract Drawings. The pipe shall contain a minimum of 2 percent carbon black.

B. Fittings:

1. Fittings shall be butt fusion type, meeting the requirements of ASTM D-3261. All fittings shall be rated to match the system piping to which they are fused. At the point of fusion, the outside diameter and minimum wall thickness shall meet the outside diameter and minimum wall thickness specifications of ASTM F-714 for the same size of pipe. Pipe connections between dissimilar materials shall be joined by stub end and backing flange.

2. Flanges, when required, shall be of plate type ANSI B16.5-B1, Class 125 lb.

3. The bolts for the flanges shall be galvanized carbon steel. For above- and below-ground installation, bolts shall conform to the requirements of ASTM A307-92a. Bolts shall be carbon steel, Grade B, heavy hex, hot dip-coated in accordance with the requirements of Class C of ASTM A153. Nuts shall conform to the requirements of ASTM A563. Nuts shall be Grade A, heavy hex, hot dip zinc-coated in accordance with Class C of ASTM A153. Washers shall be Grade A, hot dip zinc-coated in accordance with Class C of ASTM A153. All flanges shall have gaskets. Gaskets are to be HYPALON or approved equal material for the service.

C. The piping and pipe fittings shall be comprised of new, first quality HDPE material.

D. The Contractor shall submit a certification from the manufacturer of the piping and pipe fittings, stating that the piping meets physical property requirements for the intended application.

E. Each standard and random length of pipe in compliance with this specification shall be clearly marked at a minimum: (1) pipe size, (2) SDR number, and (3) class and profile numbers.

PART 3. EXECUTION

3.01 PREPARATION

A. Contractor shall stake out pipe alignment and a site survey of the area shall be completed and approved by the Engineer before installation can begin. This will allow the Engineer to determine if any change in the collection system design is needed.

B. The Manufacturer shall furnish complete written instructions for the storage, handling, installation, fusion, and repair of the piping in compliance with this Specification and the conditions of this warranty.

C. The interior of all pipe shall be thoroughly cleaned of all foreign material before being lowered in the trench and shall be kept clean during laying operations by means of plugs, or other industry-approved methods.

3.02 INSTALLATION

A. Aboveground Installation:

1. Thermal expansion and contraction plays a critical role in the above-grade installed pipes. Temperature changes both externally and internally will cause the pipe to expand or contract, and limiting these expansions and contractions are very important.

2. Prior to installation of the pipe, the Contractor shall prepare grade along the pipe route to lines and grades, as shown on the Contract Drawings. The grade shall be finished relatively smooth to accommodate movements of the pipe in all directions during expansion and contraction.

3. The Contractor shall then install the pipe on the prepared surface to lines and grades, and maintain a minimum slope in the direction of the condensate flow as indicated on the Contract Drawings.

4. The change in direction or change in grade for all HDPE piping shall be achieved by using the proper type of pipe fittings.

5. The Unistrut assemblies shall be placed along the pipeline connection segment at the intervals shown on the Contract Drawings and specified herein.

3.03 TESTING (MAY NOT BE REQUIRED FOR LIMITED PIPING PLACEMENT)

A. The Contractor shall conduct a pneumatic pressure test on installed HDPE header. He shall furnish all necessary equipment and materials, and make all taps in the pipe, as required. The Engineer shall be notified at least 72 hours in advance of testing. The test shall be witnessed by the County and/or Engineer.

B. All installed pipes shall be subjected to air test pressure of 100 psig for a period of 1 hour, except for the LFG headers and lateral pipes. The LFG headers and laterals shall be tested at 10 psig for a period of 1 hour. During this period, no loss of pressure shall be observed.

C. The piping, except at the joints and flanged connections, shall be backfilled prior to air testing. Upon the approval of the Engineer and after passing the air testing program, the joints shall be backfilled.

D. Any section of pipe, which fails to meet the stipulated pressure test, shall be checked by the Contractor and corrective measures taken. The test shall then be repeated, at no additional cost to the County, until test results meet the specified requirements.

E. No pipe installation will be accepted unless and until it meets the pressure test requirements.

F. Equipment. The Contractor shall provide the following equipment for the pressure test:

1. Pneumatic compressor separator-dryer system capable of providing oil-free dry air and equipped with one or more full capacity safety relief valves set at a pressure of not more than 105 percent of the required test pressure.

2. Pressure gauges of suitable sizes.

G. Procedure:

1. Pneumatic testing shall be performed using accurately calibrated instruments and oil-free, dry air. Tests shall be performed on piping after the piping has been completely installed. All parts of the piping system shall be subjected to the test pressure, as indicated above, for period of 1 hour. During this period, no loss of pressure shall be observed. The Contractor shall recognize the hazards associated with air testing and shall take all necessary precautions to protect test personnel. All piping to be tested shall be secured to prevent damage to adjacent piping and equipment in the event of a joint failure. Any appurtenant instruments or devices that could be damaged by the test shall be removed from the piping or suitably isolated prior to applying the test.

2. Test Records: Records shall be made of each piping system installation during the test. These records shall include:

   a. Date of test.

   b. Description and identification of piping tested.

   c. Test pressure.

   d. Remarks, to include such items as:

      1) Leaks (type, location).

      2) Repairs made on leaks.

   e. Certification by Contractor and signed acknowledgment by the Engineer.

3.04 CERTIFICATION OF COMPLETION

A. Upon completion of the backfilling operation over the piping system, the Contractor shall certify the following to the Engineer:

1. The piping system has been constructed in accordance with the approved project plans and specifications.

2. The piping system has been field tested and has passed all of the required tests in the approved project plans and specifications.

3. The piping system has not been damaged during the backfilling operation or construction.

END OF SECTION

SECTION 15016

VALVES

PART 1. GENERAL

1.01 DESCRIPTION

A. Work Included:

1. The work described in this section consists of furnishing all labor, materials, equipment, and incidentals necessary to install and test various valves for LFG piping within the Blower Flare Station (BFS), complete in place and ready for operation as shown on the Contract Drawings and specified herein.

1.02 SUBMITTALS

A. Submittals shall be made in accordance with Section 01300 - Submittals. In addition, the following specific information shall be provided:

1. Complete specifications, descriptive drawings, and catalog cuts.

2. Manufacturer's warranty.

PART 2. PRODUCTS

2.01 GENERAL

A. All valves shall be complete with all necessary operators, actuators, hand-wheels, worm gear operators, wrenches, and other accessories or appurtenances, which are required for the proper completion of work, included under this Section.

B. All valves between the blower and flare and between the new BFS Pipe and the existing operational flare shall be of automatic/pneumatic type, controlled via solenoids and ancillary devices, and supplied by BFS equipment vendor.

C. Valves shall be suitable for the intended service. Renewable parts, including discs, packing, and seats, shall be of types recommended by valve manufacturer for intended service, but not of lower quality than specified herein.

D. Valves and operators shall be suitable for the exposure they are subjected to, enclosed in valve chamber or exposed, as applicable.

E. All valves shall have the name of the manufacturer and sizes cast on the body or bonnet or shown on a permanently attached plate in raised letters.

F. For the purpose of designating the type and grade of valve desired, a manufacturer's name is given in the following specifications. Valves of equal quality by other manufacturers will be acceptable.

2.02 METALLIC VALVES

A. Butterfly Valves:

1. All valve shafts shall be connected to operators by use of keys and keyways. The use of compression or friction connection will not be accepted.

2. The butterfly valves, for low-pressure/vacuum landfill gas services, shall have cast-iron wafer-style valve body with contoured 316 stainless steel disc, Type 316 stainless steel stem, Acetal stem bushing, and Viton replaceable resilient seat. Valves shall be bubble-tight at 150-psi differential pressure and shall be suitable for installation between ANSI 125-pound flanges.

3. All butterfly valves shall open left or counterclockwise when viewed from the stem. Manual valve operators shall be either worm gear or lever type, as shown on the Contract Drawings. All operators shall have adjustable mechanical stop limiting devices to prevent over-travel of disc. Should an adjustment of the disc be required to maintain a bubble-tight seal, this adjustment shall be made externally without removing the operator housing cover. The operator shall be designed such that all adjustments can be made under pressure and without the possibility of dirt getting into the operator lubricant. Any adjustments through the lower shaft will not be acceptable. Operator components shall, at the extreme operator positions, withstand without damage a pull of 200 lb for hand-wheel or an input torque of 300 ft-lb for operating nuts.

4. All butterfly valves shall be manufactured by Demco/Copper Cameron Valves, DeZurik, Keystone Valves U.S.A., Kennedy Valve Manufacturing Company, or approved equal.

5. All exterior surfaces of butterfly valves shall be clean, dry and free from rust and grease before coating. The exterior ferrous parts of all valves shall be shop primed at the factory with one coat, minimum dry film thickness 1.5 mils, of a primer with rust-inhibitive pigments and synthetic resins. Following installation, aboveground valves shall be finish painted in accordance with following table:

Surface Preparation	Paint Material	Minimum Coats, Cover
Abrasive Blast (SP 6)	Rust-Inhibitive Primer	1 coat, 2 MDFT*
	Alkyd Enamel	2 coats, 4 MDFT*

* MDFT = Total Minimum Dry Thickness in mils.

6. For above- and below-ground installation, bolts shall conform to the requirements of ASTM A307-92a. Bolts shall be carbon steel, Grade B, heavy hex, hot dip-coated in accordance with the requirements of Class C of ASTM A153. Nuts shall conform to the requirements of ASTM A563. Nuts shall be Grade A, heavy hex, hot dip zinc-coated in accordance with Class C of ASTM A153. Washers shall be Grade A, hot dip zinc-coated in accordance with Class C of ASTM A153.

2.03 PVC VALVES

A. PVC Butterfly Valves. PVC butterfly valves shall be PVC wafer-style valve, single piece body design, rated at 150 psi bubble-tight shut-off. Body and disc shall be molded of PVC Type 1, Grade 1, and cell classification conforming to ASTM D-1784. The shaft shall be 416 stainless steel, blowout proof, and have engagement over the full length of the disc. The disc shall have double “O” ring seals of top and bottom trunnions of the same material as the valve liner. Liner shall be molded and formed around the body, functioning as a gasket on each side of the valve. Liner and “O” rings shall be Viton. Valves shall be hand-lever operated. Hand levers shall have slotted guards and locking devices to allow valve disc to be locked in inter-mediate positions between fully opened and fully closed. The valve shall be of line size and shall fit between 125-pound ANSI flanges. Valves shall be manufactured by Chemtrol, Asahi/America, or approved equal.

B. PVC Cock Valves. Gas and pressure sampling valves shall be 1/4-inch PVC cock valves. Valve seats and seals shall be EPDM. Valves shall have 1/4-inch MPT on one end and hose connection on the other end. Valves shall be as manufactured by Chemtrol, Asahi/America, or equal.

C. PVC Gate Valves. PVC gate valves shall be threaded type manufactured of the same PVC Type 1, Grade 1 molding compound as the fittings to assure compatibility. The valve stem shall be non-rising type and oversized to provide added strength to resist distortion or cracking on heavy usage application. The wedge, or gate, shall be top quality polypropylene material for positive sealing and smoother operation. “O” ring shall be used at the stem and bonnet nut to eliminate the need for continued retightening. Valves shall withstand a cold pressure of 20 psi. Valves shall be manufactured by Chemtrol, Asahi/America, or approved equal.

2.04 CPVC TRUE UNION BALL VALVES

A. CPVC True Union Ball Valves. All thermoplastic ball valves shall be True Union construction from CPVC Type IV Cell Classification 23447 conforming to ASTM D 1784. All O-rings shall be Viton. All valves shall have Safe-T-Shear stem and double stop polypropylene handle. All valve union nuts shall have buttress threads. All valves seal carriers shall be Safe-T-Blocked. All valves components shall be replaceable. Valves shall be certified for portable water use by NSF International and shall be pressure rated at 235 psi (for water at 73^0F). Valves shall be manufactured by Spears Manufacturing Company, or approved equal.

PART 3. EXECUTION

3.01 INSTALLATION

A. Valves of the size and type shown on the Drawings shall be set plumb and installed at the locations indicated on the Drawings. Valves shall be installed in accordance with manufacturer's installation instructions and with the Details shown on the Drawings.

B. Valves shall be installed such that they are supported properly in their respective positions, free from distortion and strain. Valves shall be installed such that their weight is not borne by blowers and equipment that are not designed to support the weight of the valve.

C. Valves shall be carefully inspected during installation; they shall be opened wide and then tightly closed and the various nuts and bolts shall be tested for tightness. Special care shall be taken to prevent any foreign matter from becoming lodged in the valve seat. Check and adjust all valves for smooth operation.

D. Install valves with the operating stem in either horizontal or vertical position.

E. Allow sufficient clearance around the valve operator for proper operation.

F. Clean iron flanges by wire brushing before installing flanged valves. Clean flange bolts and nuts by wire brushing, lubricate threads with oil or graphite, and tighten nuts uniformly and progressively. Clean threaded joints by wire brushing or swabbing. Apply Teflon joint compound or Teflon tape to pipe threads before installing threaded valves. Joints shall be airtight.

3.02 TESTING (MAY NOT BE REQUIRED)

A. Valves shall be tested at the same time that the adjacent pipeline is tested. Joints shall show no visible leakage under test. Joints that show signs of leakage shall be repaired prior to final acceptance. If there are any special parts of control systems or operators that might be damaged by the pipeline test, they shall be properly protected. The Contractor will be held responsible for any damage caused by the testing.

B. If requested by the City, the valve manufacturer should furnish an affidavit stating the materials options furnished and/or that he has complied with these and other referenced Specifications.

END OF SECTION

SECTION 16010

BASIC ELECTRICAL REQUIREMENTS

PART 1. GENERAL

1.01 WORK INCLUDED

A. The work described in this section consists of furnishing all labor, materials, equipment, and installation required for the complete, satisfactory, and approved electrical systems as indicated on the Contract Drawings and called for in these Specifications, or as may be reasonably implied by either. The work shall include the Blower Flare System (BFS) (Flare Replacement) and interconnection of the existing BFS for the City of Sacramento Recycling and Solid Waste Division, City of Sacramento, as shown on the Contract Drawings and Specifications herein.

B. The Contractor shall install complete and operating electrical systems consisting of the following:

1. Conduit installation as shown on the Contract Drawings or as required for:

   a. Power, control, and lighting for the new BFS components and reconnection of reused blower and ancillary equipment.

   b. Power, and control of the existing BFS (manufactured by John Zink), including providing electrical to existing control panel(s), flare, blower, and auto shut-off valves. Control of the existing flare shall be independent from the new BFS, but have the ability to be entirely controlled by the new BFS system. This includes sufficient conduit and electrical relays, etc., to enable the new BFS to be able to obtain, flow, temperature, and other necessary data from the existing BFS. The Contractor will need to coordinate said work with the flare vendor and City, as well as, provide their electrician to the vendor to complete the work per vendor's direction to sufficiently install, complete, and operate the interconnected systems.

2. Complete distribution of power and control as shown on the Contract Drawings, including feeders, grounding, lighting, switches and receptacles, and all other equipment as shown on the Contract Drawings or specified herein.

3. Contractor shall make all final connections to equipment, furnished by other trades.

1.02 CODES AND STANDARDS

A. Reference within these Specifications to standards, codes, or reference specifications implies that any item, product, or material so identified must comply with all minimum requirements as stated therein, unless indicated otherwise. Only the latest revised editions are applicable.

B. The Specifications, codes, and standards listed below form a part of these Specifications:

1. National Electrical Code (NEC).
2. California Electrical Code (CEC).
3. Underwriters' Laboratories (UL).
4. National Electrical Manufacturers Association (NEMA).
5. Insulated Cable Engineers Association (ICEA).
6. American Society for Testing and Materials (ASTM).

C. Testing and Laboratory Listing/Approval: Equipment and material shall be UL listed where standards have been established, and shall be identified for the purpose intended. Obtain and pay for all necessary laboratory testing, inspection, and approval of unlisted equipment or material where listing is required by the City's Building Division.

1.03 DRAWINGS

A. The Contract Drawings indicate the extent and general arrangements of equipment and wiring systems. Drawings showing interconnection are limited to basic electrical connection of said system. As-built drawings of the existing BFS will be provided to the Contractor by the City or Engineer. If any departures from the drawings are deemed necessary by the Contractor, details of such departures and reasons therefor shall be submitted to the Engineer for approval within 30 days after award of the Contract. No such departures shall be made without the prior written approval of the Engineer. All items not specifically mentioned in the Specifications or noted on the drawings but necessary to make a complete working installation shall be included.

1.04 SUBMITTALS

A. Shop Drawings:

1. Each package of shop drawings shall be bound as a unit and shall contain a first sheet with the project name, location, date submitted, name and address of the Contractor, name and address of the equipment supplier, and a list of the contents.

2. The submittal drawings shall include materials, dimensions, fabrication details, installation instructions, standards compliance, and UL approval. Where a data sheet contains details covering various sizes or ratings of equipment, clearly mark the items applicable to the project.

3. Submit drawings for circuit breaker panels, equipment control centers, overcurrent protective devices, and control enclosures showing dimensions, nameplate nomenclature, electrical rating, wiring diagrams, and schematics.

B. Operation and Maintenance Manuals:

1. The operation and maintenance (O&M) manuals shall include the name, address, and phone number of the supplier and nearest manufacturer's representative and shall contain a complete parts list for each system.

1.05 EQUIPMENT MANUAL AND OWNER INSTRUCTIONS

A. Upon completion of the work, the Contractor shall prepare and deliver to the Engineer (3) three complete sets of the O&M manuals for each electrical and equipment control installed. The manuals shall consist of detailed drawings of catalog sheets for each component, replacement parts lists, wiring diagrams, maintenance instructions, and description of system operation.

1.06 COORDINATION WITH OTHER UTILITIES

A. Installation of conduits for power shall be thoroughly coordinated with other utilities on the site. Details of routing, size of bends, and termination at each end of service shall be verified on the job site.

1.07 COORDINATION WITH OTHER TRADES

A. The Contractor shall plan and lay out the electrical work in order to be compatible with the site, equipment location, and panel mounting and located as necessary to avoid other subsurface conduits or other utilities and installed per the aforementioned codes and standards.

1.08 STORAGE

A. All materials shall be stored in a safe, orderly manner. Materials shall not be stored directly on the ground or floor and shall be kept clean, dry, and free from damage or deteriorating elements. Damaged or rusted materials shall not be installed.

1.09 MATERIALS

A. All equipment, materials, and components shall be new, standard, current products by manufacturers regularly engaged in the production of such equipment and be the manufacturer's latest design. All components by same manufacturer shall be mechanically and electrically compatible with rating of apparatus in which they are installed. All materials shall bear the label of Underwriters Laboratory for the intended use in all cases where this labeling is available or shall be materials reviewed by the code enforcing authorities and Engineer. Equipment of a similar nature shall be identical.

1.10 ACCESSORIES

A. All hardware and accessory fittings shall be of a type designed, intended, or appropriate for their use, complement the items with which they are used, and shall have corrosion protection suitable for the atmosphere in which they are installed. All such hardware shall be U.S. standard sizes.

1.11 INSTALLATION

A. All materials shall be installed at the locations indicated on the Contract Drawings, or implied in the Contract Specifications, and in accordance with the specific manufacturers recommended installation methods.

B. All equipment shall be set level at the correct heights, properly aligned; and, where in sections, shall be bolted together.

C. Secure all materials and equipment firmly in place. Do not weld electrical materials for attachment and/or support.

D. All screws, bolts, nuts, clamps, fittings, or other fastening devices shall be made up tight.

E. All materials and equipment shall be installed complete, including screws or bolts, covers, plates, fittings, etc.

F. Follow the installation directions and recommendations of the materials and equipment manufacturers.

G. Connections to motors shall be made with weatherproof flexible metal conduit and approved fittings.

1.12 IDENTIFICATION

A. Electrical equipment shall be clearly and permanently labeled with a securely fastened nameplate. Nameplates shall be 1/16-inch thick engraved laminated plastic and shall have 3/16-inch high white letters on a black background. Plates shall be provided for all control panel, and circuit breaker panels.

B. All conductors shall be permanently tagged at wire trough and terminal boxes. Feeders shall be identified at every accessible point with a permanent tag indicating circuit number. Conductor tags shall be non-conductive.

C. All circuits and equipment shall be identified to correspond with the Contract Drawings and Specifications.

D. Panel board shall contain a typewritten directory behind a plastic cover, located on inside of door.

E. Install equipment identification nameplate at the top center of the equipment, using a rubber-based adhesive or stainless steel machine screws into tapped holes.

1.13 CONNECTION

A. Make all connections for Blower Flare System (BFS) and control devices, and interconnection of the existing flare and control devices. Install and connect blower motor starters and controls for both BFS systems, including exact wiring requirements as determined in accordance with control wiring diagrams furnished for the equipment.

1.14 TESTING

A. Upon completion of the work, the Contractor shall energize, start up, and test operate all the systems, new and existing BFS systems, and equipment in the presence of the Engineer and Owner (City) or their approved representative. All testing and measuring instruments and equipment required to test each system shall be provided by the Contractor. Any defects or variances from standard or specified conditions found during these tests shall be corrected by the Contractor at no cost to the City. The following tests shall be performed:

1. The main service and all feeders and branch circuits shall be energized from the normal power source. Ammeter and voltmeter readings shall be made and recorded as follows:

    a. Phase to phase and phase to ground voltage at the main service connection at motor starters or MCC and panel board.

2. All circuit breakers shall be manually tripped and reset.

3. All defective lamps found during test shall be immediately replaced.

4. All receptacles and light switches shall be tested to verify they are connected properly.

5. All motors and controls shall be checked to verify correct connection, rotation and operation.

6. Wire trough and panel board shall be inspected prior to installing covers to verify correct sizes and color coding.

7. A complete operating test of any contract work affiliated instrumentation and control systems shall be made to verify correct operation of each system and all related equipment.

B. Prior to the final test, continuity tests and insulation resistance tests shall be performed to assure there are no shorts or unintentional grounds in the entire electrical system(s). Test readings shall be recorded and given to the Engineer.

1.15 PERSONNEL AND EQUIPMENT

A. The Contractor shall provide the following:

1. Qualified personnel to conduct all testing.

2. The services of the equipment manufacturer's representative to assist in testing their equipment, when the service is specified.

3. The services of the equipment manufacturer's representative to assist the Contractor in the repair or troubleshooting of their equipment in the event that said equipment fails to pass all tests.

4. All labor and equipment required for testing and/or re-testing.

1.16 CLEAN-UP AND PAINTING

A. After all systems and equipment have been installed, the Contractor shall clean all electrical equipment inside and outside the enclosures. All grease, dust, rust, and chipped plaster and concrete shall be removed from the installed equipment. Each piece of equipment shall be thoroughly cleaned and left in brand new condition. The project will not be accepted as being finished until all such dirt and contamination has been removed. The Contractor shall provide touch-up painting where finished surfaces have received minor scratches during installation.

B. Where electrical equipment with painted surfaces has been installed in finished areas, any such damage to the painted surfaces that cannot be corrected with minor touch-up painting shall be refinished at the factory at no cost to the City. Equipment installed in finished areas having noticeable damage to the finished surface will not be accepted.

PART 2. PRODUCTS (NOT USED)

PART 3. EXECUTION (NOT USED)

END OF SECTION

SECTION 16050

BASIC MATERIALS AND METHODS

PART 1. GENERAL

1.01 WORK INCLUDED

A. The work included in this section covers the work necessary to completely furnish and install the materials specified hereinafter.

1.02 STANDARD

A. Materials shall bear UL labels where applicable.

1.03 SUBMITTALS

A. Submit for review properly identified manufacturer's literature and shop drawings identifying materials, electrical characteristics, interrupting rating and data, components, and enclosure.

PART 2. PRODUCTS

2.01 OUTLET AND DEVICE BOXES

A. Cast Steel (CS) Boxes. Provide boxes of cast ferrous metal with gasketed, watertight, cast ferrous metal covers and stainless steel screws. Provide boxes with threaded conduit hubs and cast mounting lugs where lugs are required. Use Crouse-Hinds or Appleton Type FS or FD boxes, or approved equal.

2.02 WIRING DEVICES

A. Switches:

1. Weatherproof Switches. Use switches mounted in a cast metal box with gasketed, weatherproof device plate as specified.

2. Acceptable Manufacturers: Bryant, General Electric, Hubbell, Pass and Seymour, or approved equal.

B. Receptacles:

1. Duplex. Provide specification grade receptacles meeting NEMA WD 1 performance standards and Federal Specification W-C-596, and having a contact arrangement such that contact is made on two sides of each inserted blade without detent. Use two-pole, three-wire grounding type receptacles rated 20 amps, 125 volts, NEMA Configuration 5-20R, and with screw-type wire terminals colored brown. Receptacle shall be mounted in a cast metal box with gasketed, weatherproof device plate.

2. Acceptable Manufacturers: Bryant, General Electric, Hubbell, Pass and Seymour, Sierra, or equal.

C. Device Plates:

1. Weatherproof (WP) Plates:

a. Where weatherproof receptacles are designated, the receptacle shall be installed in the specified box with a gasketed, weatherproof, cast metal or stainless steel cover plate with individual cap over each receptacle opening and stainless steel mounting screws. Utilize plates with caps held tightly closed with stainless steel springs when receptacle is not in use. Acceptable Manufacturers: Bryant, General Electric, Hubbell, Pass and Seymour, or equal.

b. Where weatherproof switches are designated, the switch shall be installed in the specified box with a gasketed, weatherproof, cast metal cover plate incorporating an external operator for the internal switch and with stainless steel mounting screws. Acceptable manufacturers and types: Crouse-Hinds DS-181 or DS-185, Appleton FSK-1VTS or FSK-1VS, or equal.

2.03 TERMINAL BLOCKS 0 TO 600 VOLTS

A. Provide 600-volt terminal blocks for termination of all control circuits entering or leaving equipment, panels, or boxes. Provide screw clamp compression, dead front barrier type terminal blocks with current bar providing direct contact with wire between the compression screw and yoke. Provide yoke, current bar, and clamping screw constructed of high strength and high conductivity metal. Utilize yoke that guides all strands of wire into the terminal. Utilize current bar providing dependable vibration-proof connection. Supply terminals constructed to allow connection of wire without any special preparation other than stripping. Rail mount individual terminals to create a complete assembly and provide terminals constructed such that jumpers can be installed with no loss of space on terminal or rail.

B. Size all terminal block components to allow insertion of all necessary wire sizes and types. Supply terminal blocks with marking system allowing the use of preprinted or field-marked tags. Supply UL-approved terminal blocks manufactured by Allen Bradley, Automation Direct, Weidmuller, Ideal, Electrovert, or approved equal.

2.04 CONTROL RELAYS

A. Provide magnetic control relays, NEMA Class A600 (10 amps continuous, 7,200 VA make, 720 VA break), industrial control type with field convertible contacts, and meeting the requirements of NEMA ICS 2. Provide Cutler-Hammer Type M-600, General Electric Type CR120B, or equal.

B. Where time delay relays are specified or required, unless otherwise noted, provide magnetic control relays with a timer attachment adjustable from 0.2 to 60 seconds (minimum) and field convertible from ON delay to OFF delay and vice-versa.

2.05 ELAPSED TIME METERS

A. Provide synchronous motor-driven, elapsed time meters, 0 to 99,999.9 hours range, non-reset type, and suitable for semi-flush panel mounting. Provide General Electric Type 240, 2-1/2-inch Big Look unit, Eagle Signal Bulletin 705 unit, or equal.

PART 3. EXECUTION

3.01 OUTLET AND DEVICE BOXES

A. Installation:

1. Mount boxes approximately at heights as indicated on the drawings

2. Mount all boxes plumb and level.

3. Install boxes in a secure, substantial manner supported independently of conduit by attachment to the wall or mounting panel.

3.02 WIRING DEVICES

A. Switches. Mount switches at the heights indicated on the Contract Drawings or per NEC. Mount switches for switch operation in the vertical position.

B. Receptacles. Mount weatherproof receptacles with the hinge for the protective cover above (not at side or below) the receptacle opening.

C. Device Plates. Provide metal type device plates.

END OF SECTION

SECTION 16110

RACEWAYS

PART 1. GENERAL

1.01 WORK INCLUDED

A. The work included in this section covers the work necessary to furnish and install raceways for electrical and control wiring as shown on the Contract Drawings and Specifications herein. Work shall be inclusive of all new BFS components and equipment reuse components in the Contract Documents.

1.02 STANDARDS

A. Size of raceways shall be not less than NEC requirements but in no case shall be less than indicated on the Contract Drawings. Drawings are diagrammatic and routing of conduits shall be made by the Contractor to avoid interference with other work.

B. Materials shall bear UL labels.

1.03 RELATED WORK

A. Section 16450 - Grounding.

1.04 SHOP DRAWINGS

A. Submit for review properly identified manufacturer's literature and shop drawings giving materials, finishes, dimensions, weights, and standards compliance.

PART 2. PRODUCTS

2.01 MATERIALS

A. Electrical Metallic Tube. Use electrical metallic tube, including bushings, couplings, elbows, nipples and other fittings by meeting the requirements of UL and NEC.

B. Rigid Steel Conduit. Use rigid steel conduit, including bushings, couplings, elbows, nipples, and other fittings, galvanized by hot-dipping, and meeting the requirements of UL and NEC. Do not use set screw-type, or any other threadless type of connectors, couplings, bushings, elbows, nipples, and other fittings, unless approved by the Engineer.

C. Flexible Metal Conduit, Liquid-tight. Unless as noted on the Contract Drawings at air blower motors, use UL listed liquid-tight flexible metal conduit consisting of galvanized steel flexible conduit covered with an extruded PVC jacket and terminated with nylon bushings or bushings with steel, or malleable iron body and insulated throat and sealing O-ring.

PART 3. EXECUTION

3.01 INSTALLATION

A. Changes in directions of raceway runs shall be made with symmetrical bends or cast metal fittings. Field-made bends and offsets shall be made with a hickey or conduit bending machine specifically for size and type of conduit used. Minimum radius shall be 8 times conduit diameter for rigid metal conduit. Crushed or deformed raceways shall not be used. Use factory formed fittings for surface raceways.

B. Except where boxes, panels, and other equipment have threaded openings, make conduit connections as follows:

   1. Double locknuts, one inside and one outside for indoor locations.

   2. Provide malleable iron or steel bushing with Bakelite liner molded and bonded into the bushing.

   3. Place bushing on end of conduit in addition to locknuts.

   4. Meyers hubs (or approved equal) for all outdoor locations

C. Location and use of each type of conduit:

   1. Electrical Metallic Tube shall be used for above-ground indoor installation where so designated on Contract Drawings.

   2. Galvanized rigid steel conduit shall be used installed below-grade, above-ground and where exposed to physical damage.

   3. Liquid-tight flexible metal conduit shall be used for connections to vibrating equipment in wet and damp locations and exterior locations. Install liquid-tight flexible metal conduit so that liquids run off surface and drain away from fittings. Provide not less than 18-inch and not more than 24-inch length unless otherwise approved by project engineer.

D. Raceway fastening and supports:

   1. Supports:

      a. Secure support and fasten in place raceways at intervals of not more than 4 feet, within 3 feet of any bend and every outlet or junction box. This shall apply on vertical runs as well as horizontal runs.

      b. Support individual horizontal conduits not larger than 1-1/2 inches in diameter by means of one-hole heavy duty pipe straps.

2. Fasteners:

   a. To Wood: Wood screws, sheet metal screws, or screw-type nails.

   b. To Concrete or Solid Brick Masonry: By expansion bolts. Holes drilled to a depth of more than 1-1/2 inch in reinforced concrete beams or to a depth of more than 3/4 inch in concrete joists shall avoid cutting the main reinforcing bars. Holes not used shall be filled with mortar.

   c. To Steel Work: Machine screws, welded threaded studs, or spring-tension clamps. Raceways or pipe straps shall not be welded to steel structures.

   d. Nail-type nylon anchors or threaded studs driven in by a powder charge and provided with lock washers and nuts may be used in lieu of expansion bolts or machine screws only with prior approval from Engineer.

   e. Threaded C-clamps shall not be used.

END OF SECTION

SECTION 16120

WIRES, CABLES, AND CONNECTIONS

PART 1. GENERAL

1.01 WORK INCLUDED

A. The work included in this section covers the work necessary to furnish and install wires, cables, and connectors for electrical and control circuits as shown on the Contract Drawings and Specifications herein. Work shall also be inclusive of equipment that is to be removed and reused under the Contract Work.

1.02 STANDARDS

A. Materials to bear UL labels.

1.03 SUBMITTALS

A. Submit for review properly identified manufacturer's literature and shop drawings giving wire size, insulation type, rated voltage and temperature, and NEC designation.

PART 2. PRODUCTS

2.01 MATERIALS

A. Power Conductors (600 Volts and Below):

1. Conductors shall be rated at 600 volts and conform to NEMA WC-7 and ICEA S-61-402.

2. Conductors shall be composed of 98 percent annealed copper only, stranded. Furnish conductor sizes for circuits as shown on drawings. Minimum size shall be #12 AWG except as otherwise specified for control wiring.

3. All conductors shall be 600 volt minimum, type THWN, rated 75 degrees C wet or dry maximum conductor temperature with polyvinyl chloride insulation, and shall comply with UL standard for thermoplastic insulated wire.

4. All conductors shall be plainly marked on outer surface at least every two feet with name of manufacturer, and size and grade of insulation.

B. Color code all service, feeder, and branch circuit wire as follows:

1. 120/240 Volt System: White - Neutral; Black - Phase A; Red - Phase B.

2. 277/480 Volt System: White - Neutral; Brown - Phase A; Orange - Phase B; Yellow – Phase C.

3. Bonding conductor – green or green with yellow stripe.

4. Solid colored insulation shall be used on all conductors #10 AWG and smaller and colored vinyl tape banding over black insulation at all accessible locations for #8 AWG and larger.

C. Control Wiring:

1. All control wiring conductors shall be 600 volt type MTW or THWN. Minimum size shall be #14 AWG.

2. Conductors for control wiring shall be color coded as listed below:

a. 120 VAC Neutral; White

b. 120 VAC Line; Red

c. 24 VDC; Blue

d. Interlock (Separately energized); Yellow

e. Bonding conductor – green or green with yellow stripe.

D. Instrumentation Wiring:

1. All instrumentation wires shall be soft annealed bare or tinned copper with PVC flame retardant insulation, 300 volt rating, 105°C temperature rating, overall cable shield and with a drain wire. All instrumentation wires shall be 18 AWG.

E. Connectors, Terminals, and Splices:

1. Provide connectors, terminals, and splices for all power and lighting circuits using 600-volt wire and cable as follows:

a. Provide connectors, terminals, and splices, for all wire, cable, and equipment and bus connections that are designed and approved for the specific type and size of conductors being connected.

b. Connectors and terminals shall be designed and UL approved for use with the associated conductor material and shall provide a uniform compression over the entire contact surface. Solderless terminal lugs shall be used on all stranded conductors.

c. Pressure-crimp type connectors, terminals, and splices shall be applied with a mechanical or hydraulic tool with proper size crimping dies for making each connection. The tool shall be of the type that will not release until the correct pressure has been applied.

PART 3. EXECUTION

3.01 INSTALLATION

A. Conductors shall not be pulled into conduit until all mechanical work is complete.

B. Pulling lubricants shall be of the type accepted for the particular cable insulation and as recommended by the cable manufacturer.

C. Conductors in panelboards, junction boxes, pull boxes, etc., shall be formed, grouped, and tied with nylon ties to present a neat and orderly appearance.

D. Leading end of each conductor pulled shall be carefully examined for damage to jacket. If damaged, cable shall be extended and further checked for damage with only good cable to remain.

E. At each outlet, allow not less than 6 inches of slack for connection to load.

F. Tape all connections in 600-volt wire and cable as follows:

1. Tape all connections, splices, taps, and exposed barrels of terminal lugs with half-lapped layers of 3M Scotch 33, vinyl plastic tape, or equal, applied to a thickness equal to the conductor insulation and, in addition, apply at least two half-lapped layers of 3M Scotch 88 vinyl plastic tape over the first layers of tape.

G. Wire and Cable Marking:

1. Identify each phase of all feeder conductors with 3M Scotch 35, or equal, vinyl plastic marking tape.

2. All feeders and branch circuit conductors and all control, alarm, and instrumentation wires shall be identified at all terminations, junction boxes, and pull boxes as follows:

a. Use Brady Company, T&B, or approved equal machine printed thermal type wire markers for all wire and cable identification.

b. Identify all conductors of control, alarm, and instrumentation systems with wire numbers or terminal letters as indicated on the drawings. Where markings are not indicated, the Contractor shall assign his own markings and indicate them on the “Record Drawings” set of construction drawings.

H. Installation of 600-volt Wire and Cable:

1. Install wire and cable in conduits and other enclosures as indicated.

2. Except as otherwise indicated or specified, all wire and cable shall be installed in continuous runs between terminal points without splicing.

3. Make splices and taps only in wire trough from terminals in terminal boxes and other accessible enclosures.

4. When pulling wire or cable, do not subject the wire or cable to a tension greater than 50 percent of the yield strength of the conductor. Pulling lugs shall be attached to the conductor with a sleeve or grip over the cable sheath to prevent the insulation from slipping.

5. Use a UL-approved lubricant to decrease friction when pulling cable in ducts and conduits.

6. Do not subject cable to a bending radius less than 8 times the cable's outside diameter during or after installation.

7. In wire trough, make splices first then encapsulate them in an epoxy resin sealing and potting compound. Encapsulation of compression sleeve splices shall be with pre-formed molds.

8. Pulling of wires and cable into conduits shall be done in a manner which will in no way damage the insulation.

9. Sufficient lengths of wire shall be left at pull boxes for splicing or connecting to equipment and apparatus without straining.

10. Pull together cables to be installed in a single conduit.

I. Wire Sizes. Drawings indicate wire and conduit sizes for typical equipment. If sizes shown on the Drawings are not appropriate for the equipment chosen by the Contractor, wires and conduit shall be sized for the proper current-carrying capacity in accordance with the NEC or CEC, at no extra cost to the City.

J. Terminations:

1. Terminate solid conductors at screw terminals or mechanical connectors furnished on devices and equipment.

2. Terminate stranded conductors at mechanical connectors furnished on equipment. Where no connectors are included, provide suitable mechanical connectors.

3. Termination of stranded conductors on screw terminals will not be permitted. Provide suitable size compression or mechanical-type connector with spade tongue.

3.02 TESTING

A. Continuity tests and insulation-resistance tests shall be performed to assure there are no shorts or unintentional grounds. The insulation resistance shall be measured with a 500-volt DC Megger (conductor to conductor and conductor to ground) and should read greater than one Mega-ohm. Test readings shall be recorded and a certified copy given to the Engineer.

END OF SECTION

SECTION 16450

GROUNDING

PART 1. GENERAL

1.01 WORK INCLUDED

A. The work included in this section covers the work necessary to provide a grounding system complete as indicated on the Contract Drawings and Specifications herein.

1.02 QUALITY ASSURANCE

A. Materials shall bear UL label.

B. The electrical system and equipment shall be grounded in accordance with the requirements of the NEC/CEC and as specified.

C. Grounding system installation shall conform to NFPA 70 and the NEC/CEC.

D. Grounding system shall be installed as shown on drawings.

E. Install in all conduit runs an insulated, green equipment grounding conductor and bond in accordance with the NEC/CEC.

PART 2. PRODUCTS

2.01 MATERIALS

A. The grounding conductor shall be an insulated copper wire of size indicated. Where not indicated, the conductor shall be in accordance with the requirements of the NEC/CEC except that minimum size shall be No. 12 (except No. 14 is acceptable for control circuits). Inaccessible connections shall be made with the exothermic welding process using equipment manufactured by Burndy or Erico Products. Accessible connections shall be made with multiple bolt silicon bronze connectors specifically designed and approved for the connection to be made. Connectors shall be as manufactured by Burndy or O.Z. Gedney Electric. Grounding jumpers shall be provided across metal parts which are separated by non-conducting materials or joined so that there is a high resistance at the joints. Grounding cable shall not be buried directly in concrete, but a conduit sleeve shall be provided where cable passes through concrete. Grounding cable buried in earth shall be tinned.

B. Grounding Source:

1. The ground source shall consist of ground conductors and the grounding system as shown on drawings.

2. Maximum resistance to ground shall be limited to 25 ohms. Two additional ground rods shall be driven if required to maintain this level. Maximum ground resistance to each individual rod shall be 25 ohms.

C. Ground Rods. Unless as specified on the Contract Drawings, copper clad steel rod shall be not less than 3/4 inch in diameter, 10 feet long, driven full length into the earth. Maximum ground resistance shall not exceed 25 ohms under normal dry conditions.

D. Parts To Be Grounded. Parts to be grounded include equipment enclosures, fittings, fixtures and devices, cable sheaths, neutral of transformers, wire trough and raceways, motor frames, non-current carrying parts of appliances and devices, and all other parts and equipment as required by NEC. Neutral wire shall never be used as grounding means.

E. Conductor. All grounding cable shall be green or green with yellow stripe insulated copper stranded cable, soft drawn or annealed, sized as indicated on drawings except that bare conductors may be used for underground (to ground rods, auxiliary grounds, etc.).

PART 3. EXECUTION

3.01 INSTALLATION

A. All connections to equipment, bus, or conduit shall be made with approved type of solderless connector and shall be unpainted and thoroughly cleaned before connection is made to insure a good metal contact.

B. All connections which will be inaccessible after completion of project shall be made by exothermic weld process.

C. The lighting fixture shall be grounded by means of a conductor between the outlet box and fixture. All locknut connections to cabinets, pull boxes, junction boxes, etc., shall be drawn up sufficiently tight to assure a continuous metal-to-metal bond.

D. Bond all conduits, wire trough, motor control center, and similar locations using bonding bushings.

E. Provide a bonding wire in all flexible conduits and connect to the boxes at each end in an approved manner.

F. Flexible conduit shall not be used as a grounding medium.

G. Ground receptacles to their outlet boxes by means of a grounding conductor from the green terminal on the receptacle to a grounding screw in the outlet box.

END OF SECTION

DRAWING IS
HALF-SIZE AT 11x17

FLARE REPLACEMENT
SACRAMENTO CITY LANDFILL
28th AND 'A' STREETS, SACRAMENTO, CALIFORNIA, 95816
FOR
CITY OF SACRAMENTO RECYCLING AND SOLID WASTE DIVISION
2812 MEADOWVIEW ROAD, SACRAMENTO, CALIFORNIA 95832

LOCATION MAP
N.T.S.

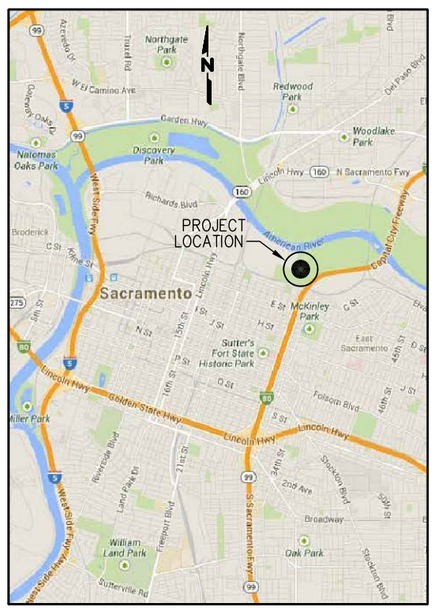

INDEX OF SHEETS

DRAWING NO.	DESCRIPTION
1	TITLE SHEET–LOCATION MAP
2	EXISTING BLOWER/FLARE SYSTEM LAYOUT
3	BLOWER/FLARE SYSTEM DEMOLITION PLAN
4	SCHEMATIC FLOW DIAGRAM
5	LFG BLOWER/FLARE SYSTEM PLAN
6	LFG BLOWER/FLARE SYSTEM SECTION AND DETAILS
7	STRUCTURAL NOTES
8	STRUCTURAL DETAILS
9 (E–1)	SITE ELECTRICAL PLAN
10 (E–2)	SINGLE LINE DIAGRAM AND LOAD SCHEDULE
11 (E–3)	ELECTRICAL DETAILS

DETAIL AND SECTION LABELING CONVENTION

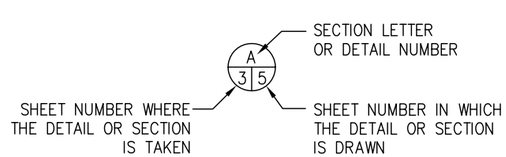

VICINITY MAP
N.T.S.

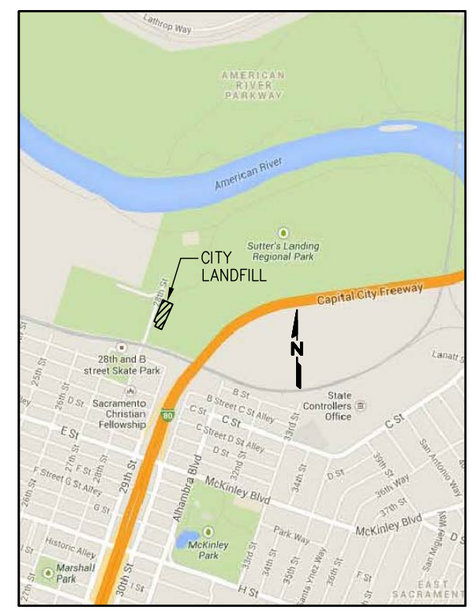

REGISTERED PROFESSIONAL ENGINEER
MINH-DUC MATHIE NGUYEN
25390
EXP 12-31-15
CIVIL
STATE OF CALIFORNIA

ISSUED FOR CONSTRUCTION

NO.	REVISION	DATE

SHEET TITLE: TITLE SHEET – LOCATION MAP
PROJECT TITLE: FLARE REPLACEMENT
28th STREET LANDFILL
SACRAMENTO COUNTY, CALIFORNIA

28th STREET LANDFILL
CITY OF SACRAMENTO
SACRAMENTO, CALIFORNIA

SCS ENGINEERS
ENVIRONMENTAL CONSULTANTS
3117 FITE CIRCLE, SUITE 108
SACRAMENTO, CA 95827
PH. (916) 361-1297 FAX. (916) 361-1299

01197.05 T106 | DWN. BY: MJE | ACAD FILE: SHT-1 | 042314
DSN. BY: MJE | CHK. BY: DV | APP. BY: AAM

DATE: 02-07-14
SCALE: AS SHOWN
DRAWING NO.

DRAWING IS HALF-SIZE AT 11x17

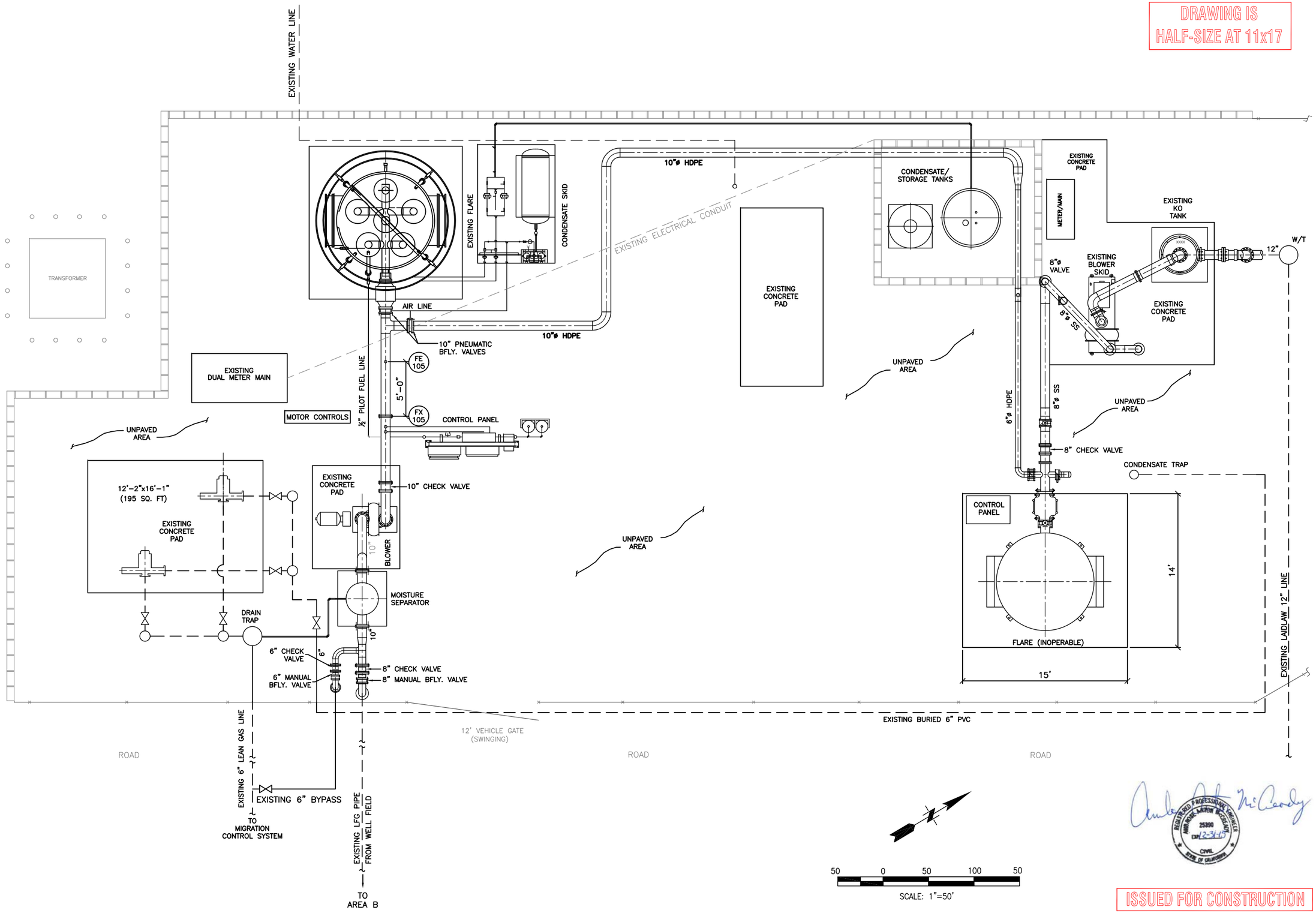

ISSUED FOR CONSTRUCTION

NO.	REVISION	DATE

SHEET TITLE: EXISTING BFS LAYOUT

PROJECT TITLE: FLARE REPLACEMENT 28th STREET LANDFILL SACRAMENTO COUNTY, CALIFORNIA

28th STREET LANDFILL
CITY OF SACRAMENTO
SACRAMENTO, CALIFORNIA

SCS ENGINEERS
ENVIRONMENTAL CONSULTANTS
3117 FITE CIRCLE, SUITE 108
SACRAMENTO, CA 95827
PH. (916) 361-1297 FAX. (916) 361-1299

PROJ. NO. 01197.37.05 T108 | DWN. BY: MJE | CHK. BY: DV | DSN. BY: MJE | APP. BY: AAM | ACAD FILE: BFS_01.dwg | PLOT DATE: 042514

DATE: 01-29-14

SCALE: AS SHOWN

DRAWING NO.

DRAWING IS HALF-SIZE AT 11x17

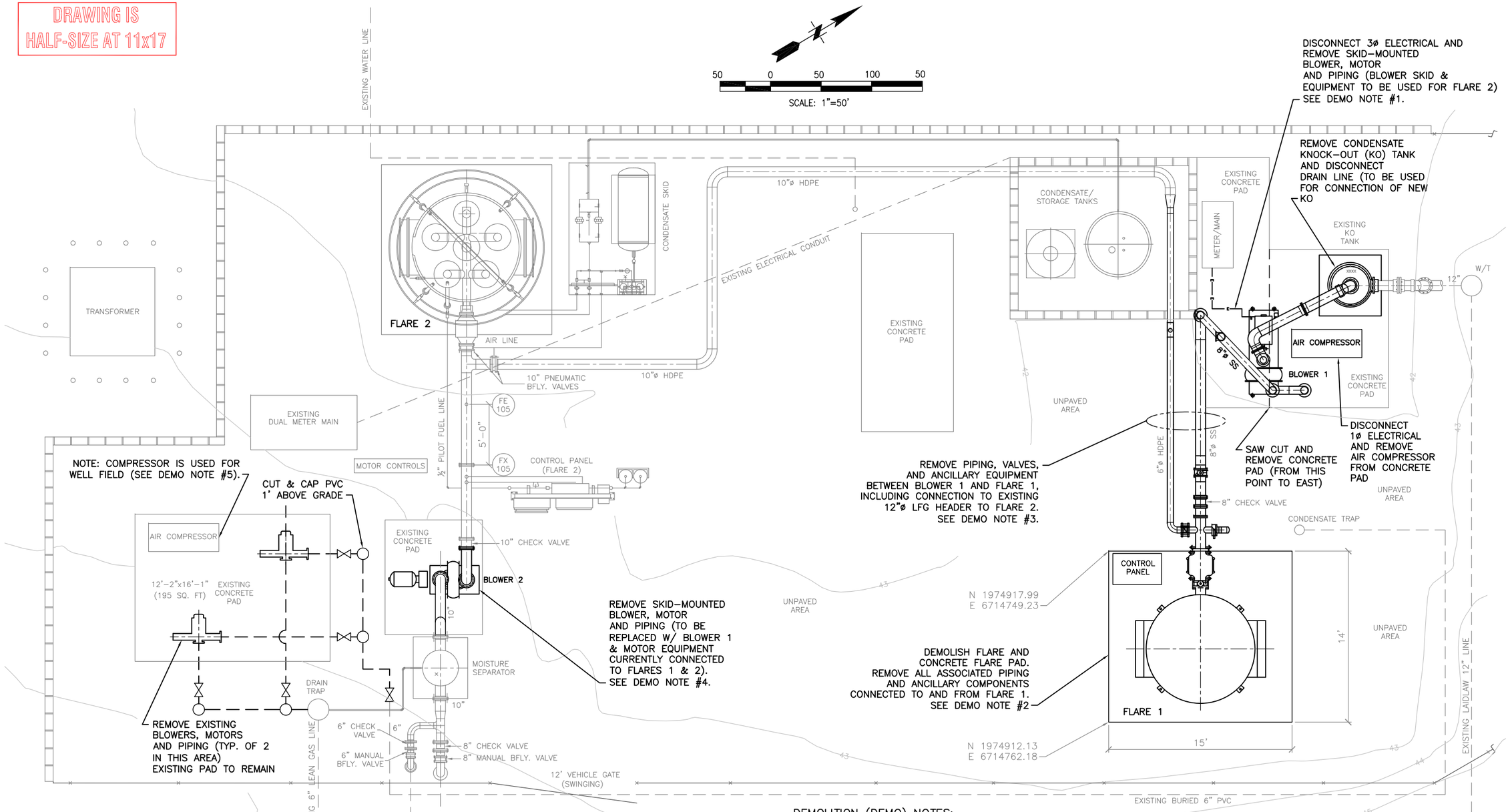

DEMOLITION (DEMO) NOTES:

1. RELOCATE BLOWER 1 EQUIPMENT TO BLOWER 2 AREA AND MAKE ALL NECESSARY CONNECTIONS.
2. REMOVE EXISTING FLARE, CONTROL PANEL, CONCRETE PAD, AND ALL ANCILLARY COMPONENTS LOCATED ON FLARE 1 PAD. CONTRACTOR SHALL DISPOSE OF ALL MATERIALS REMOVED PER DIRECTION OF THE CITY'S REPRESENTATIVE.
3. PROVIDE INTERIM PIPING CONNECTION TO EXISTING FLARE (FLARE 2) DURING INSTALLATION OF NEW FLARE (FLARE 1). INTERIM CONNECTION DETAILS TBD IN FIELD. SEE NOTE #4.
4. DISCONNECT AND REMOVE BLOWER 2 EQUIPMENT TO AN APPROVED CITY LOCATION. RELOCATE BLOWER 1 EQUIPMENT TO THIS LOCATION AND CONNECT ALL REQUIRED ELECTRICAL AND ANCILLARY COMPONENTS SO THAT BLOWER/MOTOR ASSM, IS OPERABLE PRIOR TO COMPLETION OF NEW BLOWER/FLARE SYSTEM WORK UNDER THIS CONTRACT. COORDINATE ALL WORK WITH CITY REPRESENTATIVE.
5. AIR COMPRESSOR (AC) TO REMAIN FUNCTIONAL THROUGHOUT CONTRACT WORK. ONCE NEW FLARE & EQUIPMENT IS OPERABLE, CONNECTION TO AC PIPING MAY BE REQUIRED AND ROUTED AS NECESSARY TO NEW OR OTHER COMPRESSOR AS DETERMINED BY THE ENGINEER OR CITY.
6. THE CONTRACTOR SHALL TAKE EXTRA PRECAUTION DURING DEMOLITION AND RELOCATION OF ANY EXISTING COMPONENT PERFORMED UNDER THE CONTRACT WORK. ANY DAMAGE TO ANY FACILITY OR ANCILLARY COMPONENT OF THE EXISTING BLOWER/FLARE SYSTEM SHALL BE REPLACED AT THE EXPENSE OF THE CONTRACTOR.

REGISTERED PROFESSIONAL ENGINEER MICHAEL WAYNE MCCARDY 25390 EXP 12-31-15 CIVIL STATE OF CALIFORNIA

ISSUED FOR CONSTRUCTION

NO.	REVISION	DATE

SHEET TITLE: DEMOLITION PLAN

PROJECT TITLE: FLARE REPLACEMENT 28th STREET LANDFILL SACRAMENTO COUNTY, CALIFORNIA

28th STREET LANDFILL
CITY OF SACRAMENTO
SACRAMENTO, CALIFORNIA

SCS ENGINEERS
ENVIRONMENTAL CONSULTANTS
3117 FITE CIRCLE, SUITE 108
SACRAMENTO, CA 95827
PH: (916) 361-1299 FAX: (916) 361-1297

PROJ. NO. 01197.05 T10 | DWN. BY: MJE | CHK. BY: DV | DSN. BY: MJE | ACAD FILE: BDEMO | APP. BY: AAM

DATE: 01-29-14

SCALE: AS SHOWN

DRAWING NO.

DRAWING IS HALF-SIZE AT 11x17

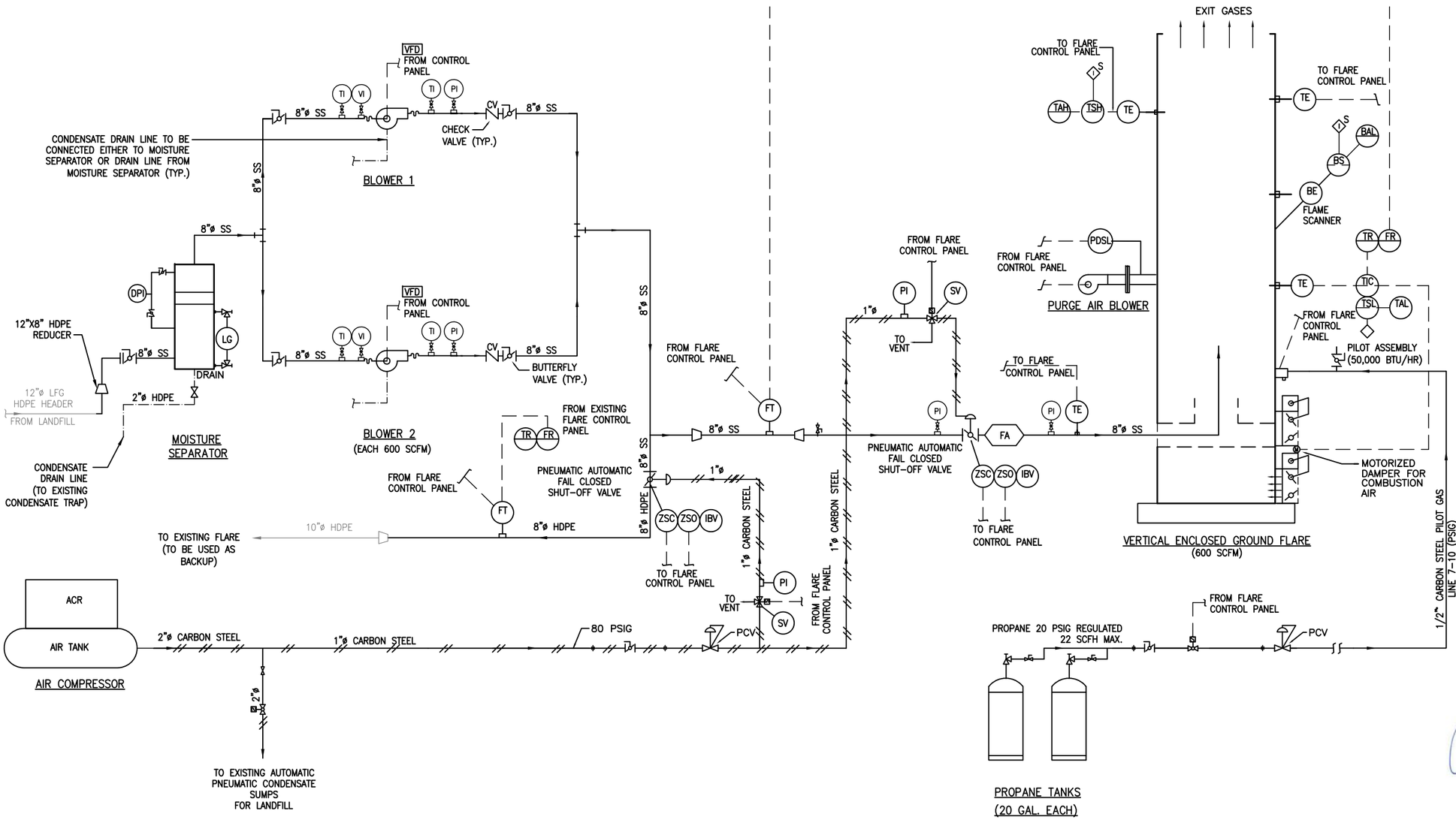

LEGEND:

GENERAL INSTRUMENT SYMBOL BALLOONS

LOCALLY MOUNTED	MOUNTED ON FLARE CONTROL PANEL	MOUNTED BEHIND FLARE CONTROL PANEL

ABBREVIATIONS

BAL	BURNER ALARM
BE	BURNER ELEMENT
BS	BURNER SWITCH
CV	CHECK VALVE
DPI	DIFFERENTIAL PRESSURE INDICATOR
FR	FLOW RECORDER
FT	FLOW TRANSMITTER
FCV	FLOW CONTROL VALVE
LAH	LEVEL ALARM HIGH
LG	LEVEL GAUGE
PCV	PRESSURE CONTROL VALVE
PI	PRESSURE INDICATOR
PDSL	PRESSURE DIFFERENTIAL SWITCH LOW
TAH	TEMPERATURE ALARM HIGH
TAL	TEMPERATURE ALARM LOW
TE	TEMPERATURE ELEMENT
TI	TEMPERATURE INDICATOR
TIC	TEMPERATURE INDICATING CONTROLLER
TR	TEMPERATURE RECORDER
TSH	TEMPERATURE SWITCH HIGH
TSL	TEMPERATURE SWITCH LOW
ZSO	LIMIT SWITCH TO PROVE VALVE IN OPEN POSITION
ZSC	LIMIT SWITCH TO PROVE VALVE IN CLOSED POSITION
IBV	INLET BLOCK VALVE
VI	VACUUM INDICATOR
SV	SOLENOID VALVE

ABBREVIATIONS (OTHER THAN INSTRUMENTS)

FA	FLAME ARRESTOR
LFG	LANDFILL GAS
SS	STAINLESS STEEL
HDPE	HIGH DENSITY POLYETHYLENE
PVC	POLYVINYL CHLORIDE
DI	DUCTILE IRON

SYMBOLS

- TRANSMISSION LINE (PNEUMATIC)
- ELECTRICAL SIGNAL
- FLOW LINE
- LOCAL INTERLOCK

NO.	REVISION	DATE

SHEET TITLE: SCHEMATIC FLOW DIAGRAM

PROJECT TITLE: FLARE REPLACEMENT 28th STREET LANDFILL SACRAMENTO COUNTY, CALIFORNIA

28th STREET LANDFILL
CITY OF SACRAMENTO
SACRAMENTO, CALIFORNIA

SCS ENGINEERS
ENVIRONMENTAL CONSULTANTS
3117 FITE CIRCLE, SUITE 108
SACRAMENTO, CA 95827
PH. (916) 361-1297 FAX. (916) 361-1299

PROJ. NO. 01197037.05 T108 | DWN. BY: MJE | ACAD FILE: 042114 | REV. DATE: | CHK. BY: DV | APP. BY: AAM | DSN. BY: MJE

DATE: 02-07-14

SCALE: AS SHOWN

DRAWING NO.

REGISTERED PROFESSIONAL ENGINEER MARK JOSEPH ENGLERT 25390 EXP. 12-31-15 CIVIL STATE OF CALIFORNIA

ISSUED FOR CONSTRUCTION

GRAPHIC SCALE
0 8'
SCALE IN FEET

DRAWING IS HALF-SIZE AT 11x17

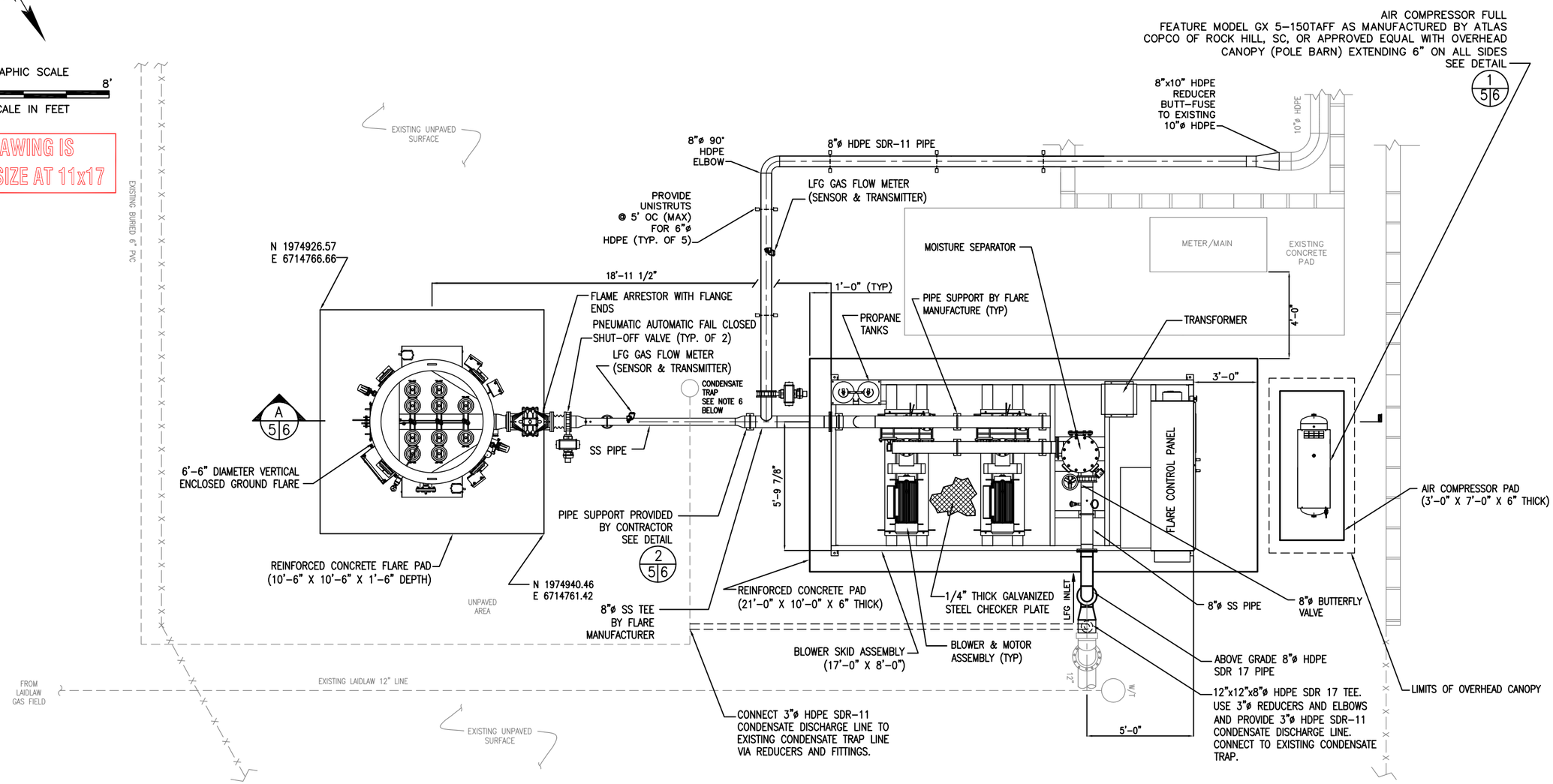

PLAN – LFG FLARING SYSTEM
SCALE: 3/8"=1'-0"

NOTES:

1. PIPE SUPPORTS SHOWN ON THE DRAWINGS ARE INTENDED TO BE DEPICTIVE AND MAY NOT REPRESENT THE EXACT NUMBER REQUIRED TO SUPPORT THE PIPING AND APPURTENANCES IN A FIRM SUBSTANTIAL MANNER FROM THE SLAB/FINISH GRADE AT THE REQUIRED ELEVATIONS. IT IS THE CONTRACTOR'S RESPONSIBILITY TO PROVIDE SUFFICIENT NUMBER OF PIPE SUPPORTS WHERE REQUIRED OR AS RECOMMENDED BY THE PIPE MANUFACTURER.
2. IN LIEU OF STAINLESS STEEL PIPING (AS INDICATED), THE CONTRACTOR MAY FURNISH ALUMINUM PIPING.
3. ALL VALVES WITHIN THE FLARE STATION SHALL BE METAL VALVES.
4. A CONTINUOUS 1/4" THICK GALVANIZED STEEL CHECKER PLATE SHALL BE PLACED OVER ENTIRE BLOWER SKID.
5. ALL ABOVE GRADE COMPRESSED AIR AND PROPANE LINES SHALL BE SUPPORTED USING PIPE SUPPORTS.
6. EXISTING CONDENSATE SUMP IS CURRENTLY NON-OPERATIONAL. CONTRACTOR SHALL MAKE ALL CONNECTIONS NECESSARY TO BRING SUMP ONLINE AND OPERABLE.

REGISTERED PROFESSIONAL ENGINEER MICHAEL A. MCCARDY 25300 EXP. 12-31-15 CIVIL STATE OF CALIFORNIA

ISSUED FOR CONSTRUCTION

NO.	REVISION	DATE

SHEET TITLE
LFG BLOWER/FLARE SYSTEM PLAN

PROJECT TITLE
FLARE REPLACEMENT
28th STREET LANDFILL
SACRAMENTO COUNTY, CALIFORNIA

28th STREET LANDFILL
CITY OF SACRAMENTO
SACRAMENTO, CALIFORNIA

SCS ENGINEERS
ENVIRONMENTAL CONSULTANTS
3117 FITE CIRCLE, SUITE 108
SACRAMENTO, CA 95827
PH. (916) 361-1297 FAX. (916) 361-1299

PROJ. NO. 01197.05 T106 | PWM. BY: MJE | AGAP FILE SHT-5.DWG | DSN. BY: MJE | CHK. BY: DV | APP. BY: AAM

DATE: 02-10-14

SCALE: AS SHOWN

DRAWING NO.

NOTE:
OVERHEAD CANOPY (POLE BARN)
NOT SHOWN FOR CLARITY.

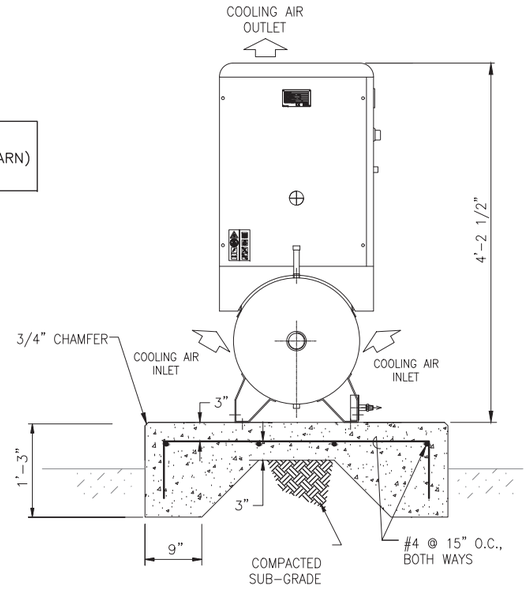

FRONT

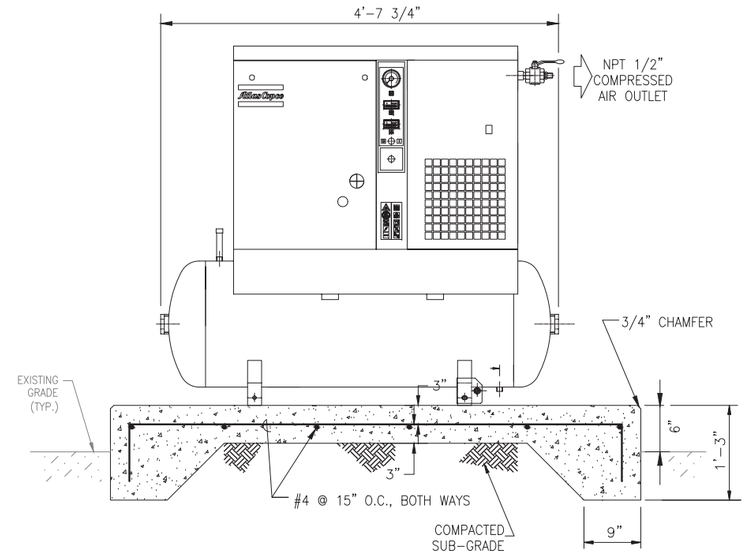

ELEVATION

DETAIL – GX5 –150 TAFF AIR COMPRESSOR (1 / 5|6)
N.T.S.

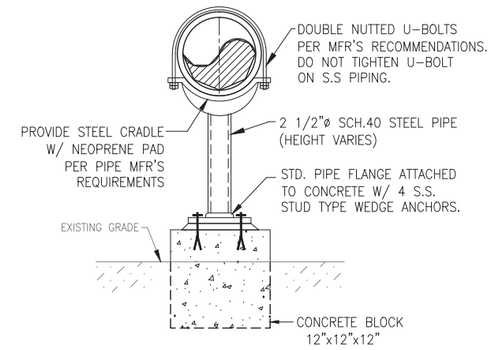

DETAIL – PIPE SUPPORT (TYP.) (PROVIDED BY CONTRACTOR) (2 / 5,6|6)
N.T.S.

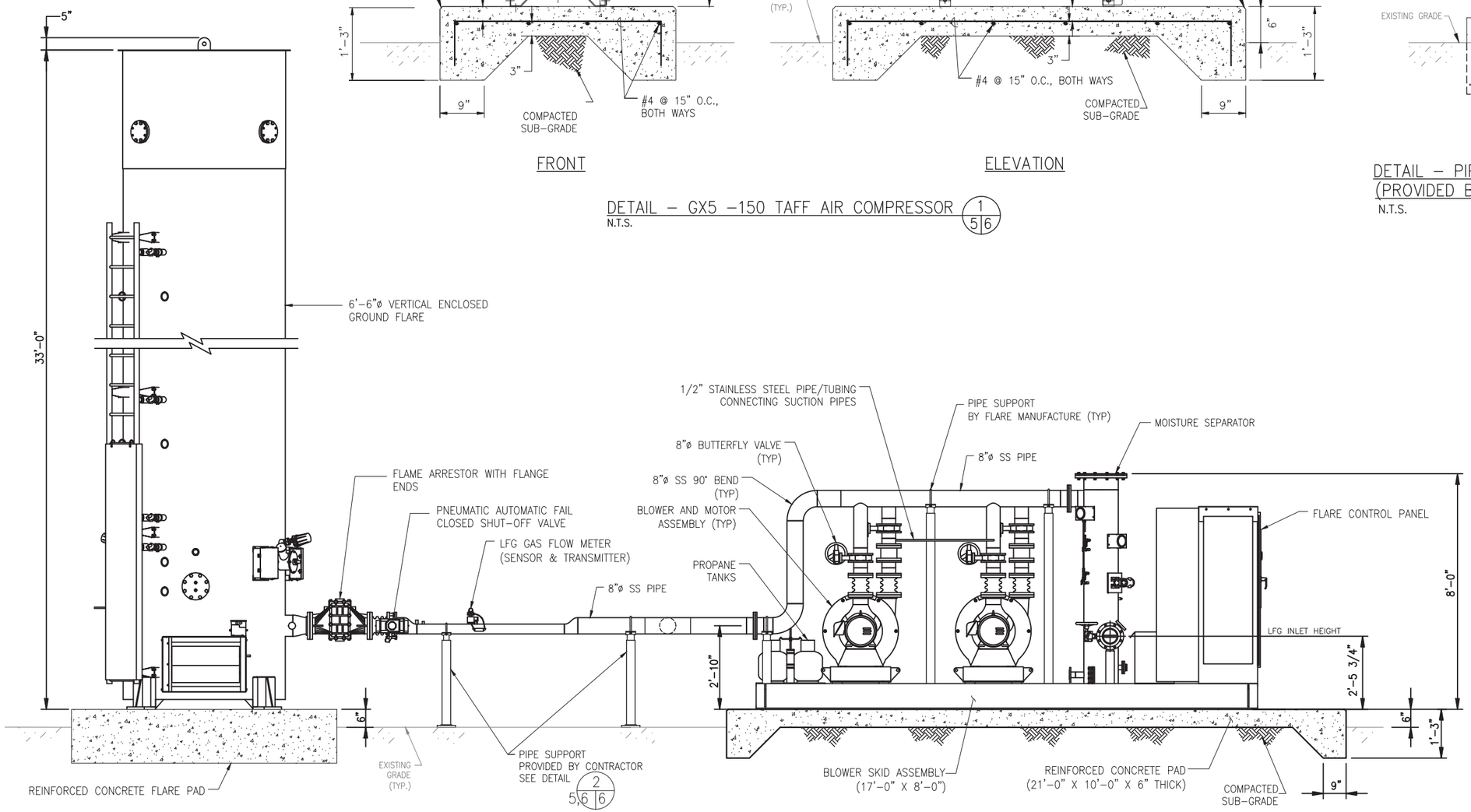

SECTION – LFG FLARING SYSTEM (A / 5|6)
SCALE: 1/2"=1'-0"

GRAPHIC SCALE
0 2 4 6
SCALE IN FEET

DRAWING IS HALF-SIZE AT 11x17

ISSUED FOR CONSTRUCTION

REGISTERED PROFESSIONAL ENGINEER
MICHAEL J. CAREY
No. 26671
Exp. 6-30-14
STRUCTURAL
STATE OF CALIFORNIA

NO.	REVISION	DATE

SHEET TITLE
LFG BLOWER/FLARE SECTION AND DETAILS

PROJECT TITLE
FLARE REPLACEMENT
28th STREET LANDFILL
SACRAMENTO COUNTY, CALIFORNIA

28th STREET LANDFILL
CITY OF SACRAMENTO
SACRAMENTO, CALIFORNIA

SCS ENGINEERS
ENVIRONMENTAL CONSULTANTS
3117 FITE CIRCLE, SUITE 108
SACRAMENTO, CA 95827
PH. (916) 361-1297 FAX. (916) 361-1299

PROJ. NO. 01919.00.37.05 T106
DWN. BY: MJE
CHK. BY: DV
ACAD FILE SH1-6 042114
APP. BY: AAM
DSN. BY: MJE

DATE: 02-07-14
SCALE: AS SHOWN
DRAWING NO.

CONCRETE NOTES

1. PROPERTIES OF CONCRETE SHALL BE AS FOLLOWS:

USE	MAXIMUM AGGREGATE SIZE	MINIMUM 28 DAY COMP. STRENGTH (PSI)	MAXIMUM WATER/CEMENT RATIO	MINIMUM CEMENT SACK PER CY	MAX. SLUMP
FOUNDATIONS	1"	3,000	0.55	5.5	4"

2. CONCRETE SPECIFIED IN THESE DRAWINGS SHALL BE CONSIDERED AS STRUCTURAL CONCRETE.
3. THE DIMENSIONS SHOWN FOR LOCATION OF REINFORCING STEEL ARE TO FACE OF BAR AND DENOTE CLEAR COVERAGE. UNLESS SPECIFICALLY NOTED, CONCRETE COVERAGE SHALL BE AS FOLLOWS:

LOCATION	COVERAGE
CONCRETE DEPOSITED DIRECTLY AGAINST THE GROUND (EXCEPT SLABS)	3"
CONCRETE EXPOSED TO THE GROUND BUT PLACED IN FORMS	2"
SLABS ON GRADE (CLEARENCE TO TOP SURFACE)	SEE PLANS & DETAILS

4. REINFORCEMENT SHALL CONFORM TO ASTM A615 GRADE 60.
5. CONTINUOUS REINFORCEMENT SHALL BE SPLICED BY LAPPING THE REINFORCEMENT WITH THE MINIMUM LENGTH SHOWN IN DETAIL THIS SHEET.
6. ALL ANCHOR BOLTS SHALL CONFORM TO ASTM A36, UNLESS NOTED OTHERWISE.
7. REFER TO BOTH CIVIL AND MECHANICAL DRAWINGS FOR LOCATION AND SPACING OF ALL PLUMBING FIXTURES.
8. ALL REINFORCING STEEL, ANCHOR BOLTS, DOWELS AND OTHER INSERTS SHALL BE WELL SECURED IN POSITION PRIOR TO POURING CONCRETE.
9. ANCHOR BOLTS OR SILL BOLTS SHALL BE HEX HEAD BOLTS UNLESS OTHERWISE NOTED. DO NOT USE UPSET (ROLLED) THREADS.
10. ALL WELDING OF REINFORCEMENT SHALL BE LOW HYDROGEN ELECTRODES UNLESS OTHERWISE NOTED. WELDING OF REINFORCING SHALL BE ALLOWED ONLY WHERE DETAILED ON DRAWINGS. ALL WELDING SHALL BE DONE IN ACCORDANCE WITH THE AMERICAN WELDING SOCIETY SPECIFICATIONS AWS D1.4. WELDING SHALL NOT BE DONE WITHIN TWO BAR DIAMETERS OF ANY BENT PORTION OF A BAR THAT HAS BEEN BENT COLD. WELDING OF CROSSING BARS SHALL NOT BE PERMITTED FOR ASSEMBLY OF REINFORCEMENT UNLESS AUTHORIZED BY THE STRUCTURAL ENGINEER OF RECORD. ASTM A706 REINFORCING SHALL BE USED FOR ALL REINFORCING THAT IS BEING WELDED.
11. PIPES LARGER THAN 1-1/2" DIAMETER SHALL NOT BE EMBEDDED IN STRUCTURAL CONCRETE EXCEPT WHERE SPECIFICALLY APPROVED BY STRUCTURAL ENGINEER. PIPES SHALL NOT DISPLACE OR INTERUPT REINFORCING BARS.

LAP LENGTH									
BAR SIZE	#3	#4	#5	#6	#7	#8	#9	#10	#11
BOTTOM BAR	20"	26"	33"	39"	46"	55"	70"	89"	109"
TOP BAR	26"	34"	43"	51"	60"	72"	91"	115"	141"

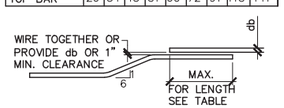

NOTES:

1. SPLICES ARE SHOWN IN INCHES AND SHALL CONFORM TO CLASS "B" SPLICES AS PER ACI 318 (LATEST EDITION).
2. SPLICE LENGTHS ASSUME THE MODIFICATION FACTORS OF ACI 318 SECTIONS 12.2 ARE 1.0. FOR OTHER CONDITIONS PROVIDE SPLICE LENGTHS IN ACCORDANCE WITH ACI 318.
3. USE THE SPLICE LENGTH GIVEN FOR TOP BARS WHEN MORE THAN 12" OF CONC. IS CAST BELOW HORIZONTAL BARS IN THE MEMBER. USE THE SPLICE LENGTH GIVEN FOR BOTTOM BARS FOR ALL OTHER CONDITIONS.

CONCRETE REINF. BAR SPLICE LENGTH

FOUNDATION NOTES

1. ALL FOOTINGS SHALL EXTEND TO FIRM BEARING IN UNDISTURBED SOIL OR ENGINEERED FILL.
2. ALL REINFORCING STEEL, ANCHOR BOLTS, AND OTHER EMBEDDED ITEMS SHALL BE SECURELY POSITIONED IN THE FORMS PRIOR TO POURING OF CONCRETE.
3. SEE CONCRETE NOTES FOR LAP REQUIREMENTS.
4. EXCAVATION: THE CONTRACTOR SHALL BE RESPONSIBLE FOR ALL EXCAVATION PROCEDURES AND FOR PROTECTION OF ADJACENT PROPERTY, STRUCTURES, STREETS, AND UTILITIES.
5. BACKFILL: DO NOT BACKFILL UNTILL 7 DAYS MINIMUM AFTER COMPLETION OF THE SLABS.
6. THE SOIL BENEATH, AND EXTENDING 5'-0" BEYOND, THE PAD SHALL BE COMPACTED TO 95% RELATIVE COMPACTION (RC).
7. FOUNDATION DESIGNS ARE BASED UPON THE FOLLOWING PARAMETERS:
   A. MAXIMUM ALLOWABLE SOIL BEARING PRESSURE:
      DEAD LOAD PLUS LIVE LOAD = 1.0 KSF
      DEAD LOAD PLUS LIVE LOAD PLUS WIND OR (SEISMIC) = 1.33 KSF
   B. PASSIVE RESISTANCE = 150.0 PCF
   C. COEFFICIENT OF FRICTION = 0.25
8. DUE TO SITE GEOTECHNICAL CONDITIONS, THE CITY IS ADVISED THAT SETTLEMENT SHOULD BE ANTICIPATED AT SOME TIME DURING THE LIFETIME OF THE FLARE STRUCTURE. THE AMOUNT OF EXPECTED FUTURE SETTLEMENT CANNOT BE DETERMINED AT THIS TIME WITHOUT FURTHER STUDY.

   THE CITY SHALL MONITOR THE FLARE STRUCTURE FOR PLUMBNESS AND FOR EVIDENCE OF GENERAL SETTLEMENT ON A SEMI-ANNUAL BASIS WITH THE BASE MONITORING EVENT OCCURING NOT MORE THAN ONE WEEK SUBSEQUENT TO COMPLETION OF FLARE CONSTRUCTION. MONITORING SHALL CONSIST OF SURVEYING ELEVATIONS OF THE TOP OF CONCRETE IN ALL FOUR CORNERS OF THE FLARE FOUNDATION WITH RESPECT TO A REFERENCE POINT OF KNOWN ELEVATION. THE REFERENCE POINT SHALL BE LOCATED ON A NEARBY FEATURE THAT IS NOT EXPECTED TO EXPERIENCE SIGNIFICANT SETTLEMENT DURING THE LIFETIME OF THE FLARE STRUCTURE. THE AMOUNT, TYPE (EG. DIFFERENTIAL, OR NORMAL), RAPIDITY, AND TIME OF OCCURRENCE OF SETTLEMENT MAY BE DETERMINED FOR USE IN DESIGN OF POTENTIAL CORRECTIVE ACTION SHOULD IT BECOME NECESSARY.

   SHOULD SETTLEMENT OF THE STRUCTURE PRECLUDE PROPER FLARE OPERATION OR BECOME OTHERWISE UNACCEPTABLE TO THE CITY, CORRECTIVE ACTION MAY CONSIST OF, BUT NOT BE LIMITED TO, HYDRAULIC GROUT INJECTION TO REORIENT THE FLARE STRUCTURE. THE GROUT MIXTURE WOULD CONSIST OF A NEAT CEMENT GROUT AND WOULD BE INJECTED INTO THE SUBSURFACE UNDER SUFFICIENT PRESSURE TO REORIENT THE FLARE FOUNDATION. THE MIXTURE WOULD BE INJECTED WITHOUT CAUSING FURTHER DISTORTION TO THE FLARE STRUCTURE.
9. CONCRETE PAD SIZES SHOWN ARE FOR PARTICULAR MODELS OF EQUIPMENT PROVIDED BY JOHN ZINK. ANY CHANGES TO THE CONCRETE PAD DIMENSIONS MADE NECESSARY BY EQUIPMENT SUBSTITUTION MUST BE APPROVED BY THE ENGINEER.
10. SUBGRADE AREAS FOR THE REINFORCED CONCRETE SLABS AND PADS SHALL BE SCARIFIED AND EXCAVATED TO A MINIMUM OF 24 INCHES BELOW THE BASE OF THE CONCRETE SLAB. THE EXCAVATED AREAS SHALL THEN BE BACKFILLED WITH AGGREGATE MATERIAL (NOTE 11) IN UNIFORM LIFTS. EACH LIFT SHALL BE MECHANICALLY COMPACTED TO 90 PERCENT MAXIMUM DRY DENSITY.
11. AGGREGATE SHALL COMPLY WITH THE REQUIREMENTS SPECIFIED AT SHEET 8, NOTE 1.

GENERAL STRUCTURAL NOTES

1. ALL WORK SHALL BE PERFORMED IN ACCORDANCE WITH 2013 CALIFORNIA BUILDING CODE (C.B.C.).
2. THE CONTRACTOR SHALL VERIFY ALL DIMENSIONS PRIOR TO STARTING CONSTRUCTION. NOTIFY THE ENGINEER IMMEDIATELY OF ANY DISCREPANCIES OR INCONSISTENCIES.
3. NOTES AND DETAILS ON DRAWINGS SHALL TAKE PRECEDENCE OVER GENERAL NOTES AND TYPICAL DETAILS OR SPECIFICATIONS.
4. WHERE REFERENCE IS MADE TO VARIOUS TEST STANDARDS FOR MATERIALS, SUCH STANDARDS SHALL BE THE LATEST EDITION AND/OR ADDENDUM.
5. THE CONTRACT STRUCTURAL DRAWINGS AND SPECIFICATIONS REPRESENT THE FINISHED STRUCTURE. THEY DO NOT INDICATE THE METHOD OF CONSTRUCTION. THE CONTRACTOR SHALL PROVIDE ALL MEASURES NECESSARY TO PROTECT THE STRUCTURE DURING CONSTRUCTION. SUCH MEASURES SHALL INCLUDE, BUT NOT BE LIMITED TO, BRACING AND SHORING FOR LOADS DUE TO CONSTRUCTION EQUIPMENT.
6. TEMPORARY BRACING OR SHORING SHALL NOT BE REMOVED UNTIL MATERIALS REACH THEIR DESIGN STRENGTH.
7. OPENINGS, POCKETS, ETC., SHALL NOT BE PLACED IN SLABS UNLESS SPECIFICALLY DETAILED ON THE STRUCTURAL DRAWINGS. NOTIFY THE ENGINEER WHEN DRAWINGS BY OTHERS SHOW OPENINGS POCKETS ETC., NOT SHOWN ON THE STRUCTURAL DRAWINGS, BUT WHICH ARE LOCATED IN STRUCTURAL MEMBERS.
8. CONTRACTOR SHALL READ AND FOLLOW ALL REFERENCED ICC REPORTS FOR INSTALLATION OF ITEMS SHOWN. ALTERNATIVE METHODS OF CONSTRUCTION MAY BE SUBMITTED FOR APPROVAL TO THE ENGINEER WITH APPLICABLE ICC REPORTS.
9. IT IS THE INTENT OF THESE PLANS TO PROVIDE DETAILS OF CONSTRUCTION NECESSARY TO GUIDE THE GENERAL CONTRACTOR WITH STRUCTURAL ASPECTS OF THE PROJECT ONLY.
10. DO NOT SCALE STRUCTURAL DRAWINGS. IF DIMENSIONS OR DETAILS ARE NOT CLEAR, OR IF DISCREPANCIES EXIST ON THE DRAWINGS, CONTACT THE ENGINEER.
11. SEE MECHANICAL, ELECTRICAL AND/OR ARCHITECTURAL DRAWINGS FOR LOCATION AND SIZES OF PIPES, CONDUITS, FLOOR DRAINS, VENTS, DUCTS, DRAIN LEADERS AND OTHER SIMILAR OPENINGS NOT INDICATED ON THESE STRUCTURAL DRAWINGS.
12. SEE MECHANICAL, ELECTRICAL AND/OR ARCHITECTURAL DRAWINGS FOR EMBEDMENT OF BOLTS, ANCHORS AND OTHER MISCELLANEOUS EMBEDDED ITEMS NOT SHOWN ON THESE STRUCTURAL DRAWINGS.

BASIS OF DESIGN

1. THE FOLLOWING APPLIED LOADS, PER THE 2013 CBC, WERE USED IN THE DESIGN OF THE PROPOSED BUILDING:

WIND:

BASIC WIND SPEED = 85 MPH
EXPOSURE C
I = 1.0

SEISMIC:

I = 1.0
SEISMIC DESIGN CATEGORY = D
SITE CLASS = D
S_S = 0.567 S_1 = 0.238
F_a = 1.346 F_v = 1.924
S_{DS} = 0.509 S_{D1} = 0.305
R = 3.0
DESIGN BASE SHEAR: SEISMIC = 3.8k, WIND = 2.7k

DRAWING IS
HALF-SIZE AT 11x17

ISSUED FOR CONSTRUCTION

REGISTERED PROFESSIONAL ENGINEER
ALBERT DU
No. 5671
Exp. 6-30-14
STRUCTURAL
STATE OF CALIFORNIA

NO.	REVISION	DATE

SHEET TITLE: STRUCTURAL NOTES

PROJECT TITLE: FLARE REPLACEMENT
28th STREET LANDFILL
SACRAMENTO COUNTY, CALIFORNIA

28th STREET LANDFILL
CITY OF SACRAMENTO
SACRAMENTO, CALIFORNIA

SCS ENGINEERS
ENVIRONMENTAL CONSULTANTS
3117 FITE CIRCLE, SUITE 108
SACRAMENTO, CA 95827
PH. (916) 361-1297 FAX. (916) 361-1299

PROJ. NO. 01997.00.37.05 T106 | DWN. BY: MJE | CHK. BY: DV | ACAD FILE: SHT-7 042314 | DSN. BY: MJE | APP. BY: AAM

DATE: 02-07-14

SCALE: AS SHOWN

DRAWING NO.

DRAWING IS HALF-SIZE AT 11x17

ISSUED FOR CONSTRUCTION

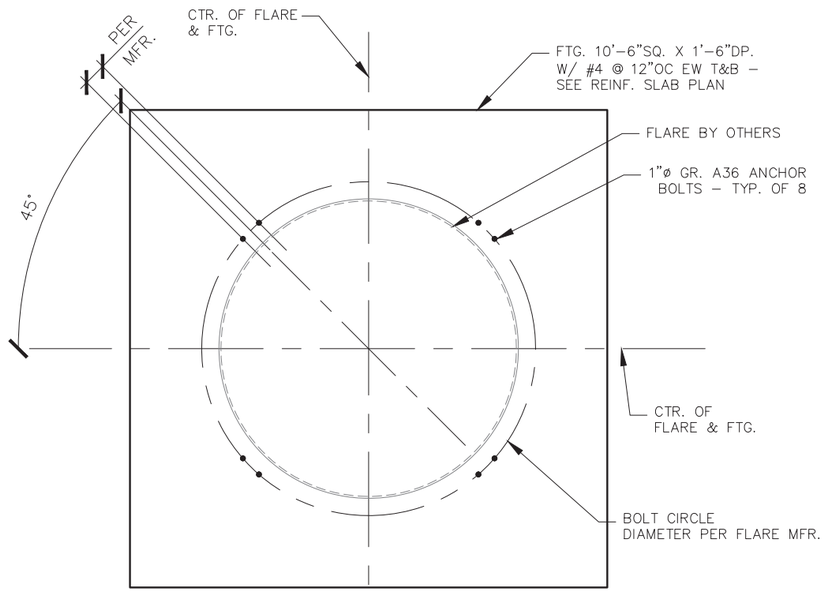

PLAN – FOUNDATION
N.T.S.

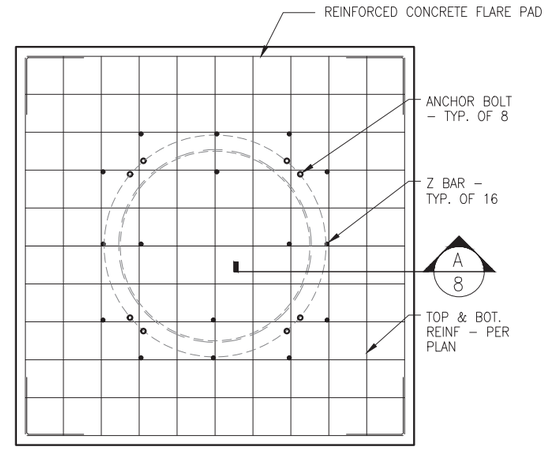

PLAN – SLAB REINFORCEMENT
N.T.S.

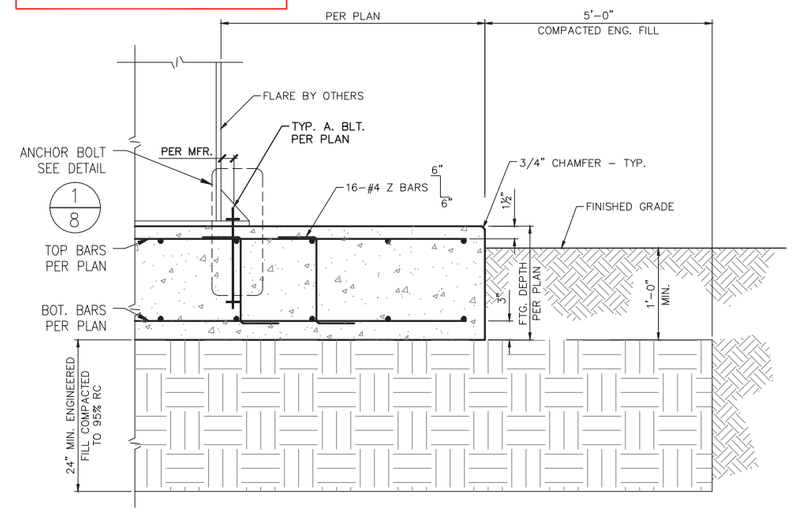

SECTION A/8
N.T.S.

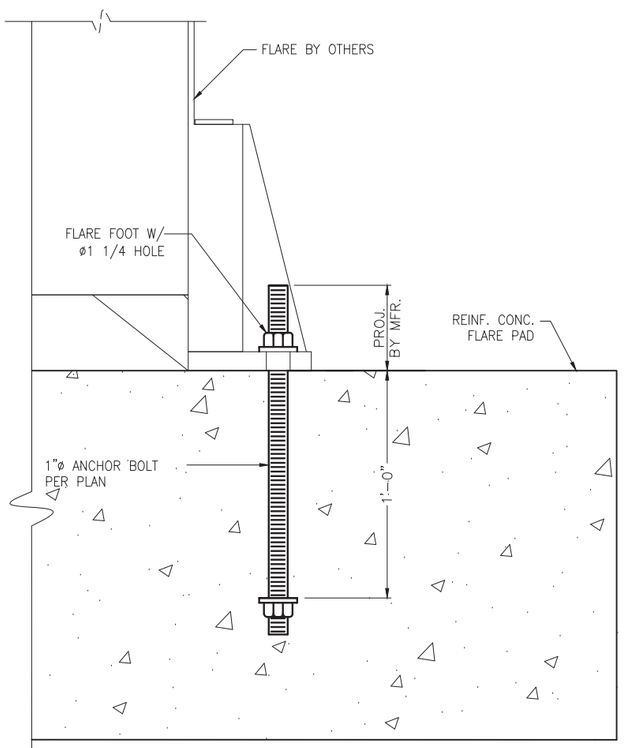

NOTE: REINFORCEMENT NOT SHOWN FOR CLARITY.

DETAIL – ANCHOR BOLT 1/8
N.T.S.

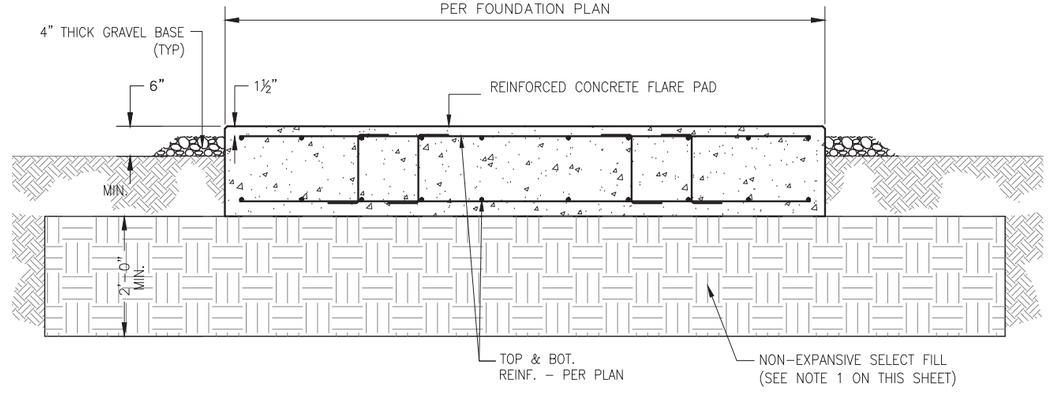

DETAIL – FLARE PAD
N.T.S.

NOTE:

1. ENGINEERED FILL MATERIAL SHALL CONSIST OF AGGREGATE BASE ROCK CONFORMING TO THE REQUIREMENTS OF CALTRANS CLASS 2 AGGREGATE BASE OR AN EQUIVALENT NON-EXPANSIVE MATERIAL, AS APPROVED BY THE GEOTECHNICAL ENGINEER. PRIOR TO PLACEMENT OF NON-EXPANSIVE SELECT FILL, THE FOUNDATION SUBGRADE, EXPOSED BY EXCAVATION, SHALL BE COMPACTED TO A MINIMUM RELATIVE COMPACTION OF 90% AT A MOISTURE CONTENT OF OPTIMUM TO A MAXIMUM OF 3% ABOVE OPTIMUM IN ACCORDANCE WITH ASTM D-1557 (LATEST REVISION). SELECT NON-EXPANSIVE AGGREGATE BASE ROCK SHALL BE COMPACTED TO A MINIMUM RELATIVE COMPACTION OF 95% PURSUANT TO ASTM D-1557 (LATEST REVISION). THE FILL SHALL BE SPREAD EVENLY AND COMPACTED IN UNIFORM LIFTS NOT EXCEEDING 8 INCHES IN PRECOMPACTED THICKNESS.

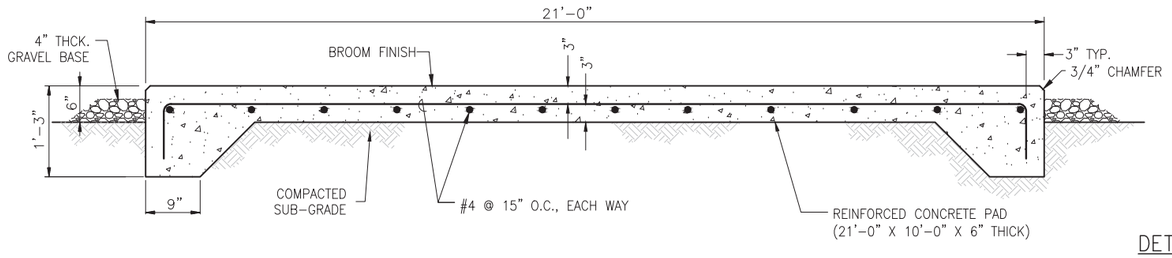

DETAIL – BLOWER SKID PAD
N.T.S.

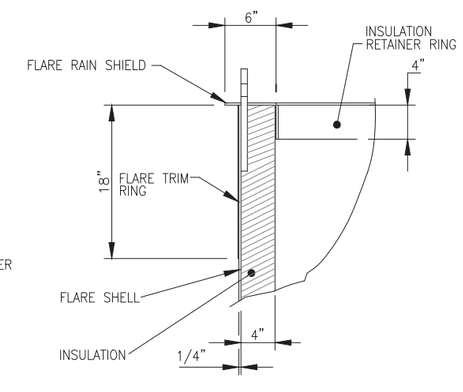

DETAIL – TYPICAL FLARE STACK TOP SECTION
N.T.S.

NO.	REVISION	DATE

SHEET TITLE: STRUCTURAL DETAILS

PROJECT TITLE: FLARE REPLACEMENT 28th STREET LANDFILL SACRAMENTO COUNTY, CALIFORNIA

28th STREET LANDFILL
CITY OF SACRAMENTO
SACRAMENTO, CALIFORNIA

SCS ENGINEERS
ENVIRONMENTAL CONSULTANTS
3117 FITE CIRCLE, SUITE 108
SACRAMENTO, CA 95827
PH. (916) 361-1297 FAX. (916) 361-1299

PROJ. NO. 01997.05 T108 | DSN. BY: MJE | DWN. BY: MJE | CHK. BY: DV | APP. BY: AAM | CAD FILE SHT-8.DWG | 042314

DATE: 02-10-14

SCALE: AS SHOWN

DRAWING NO.

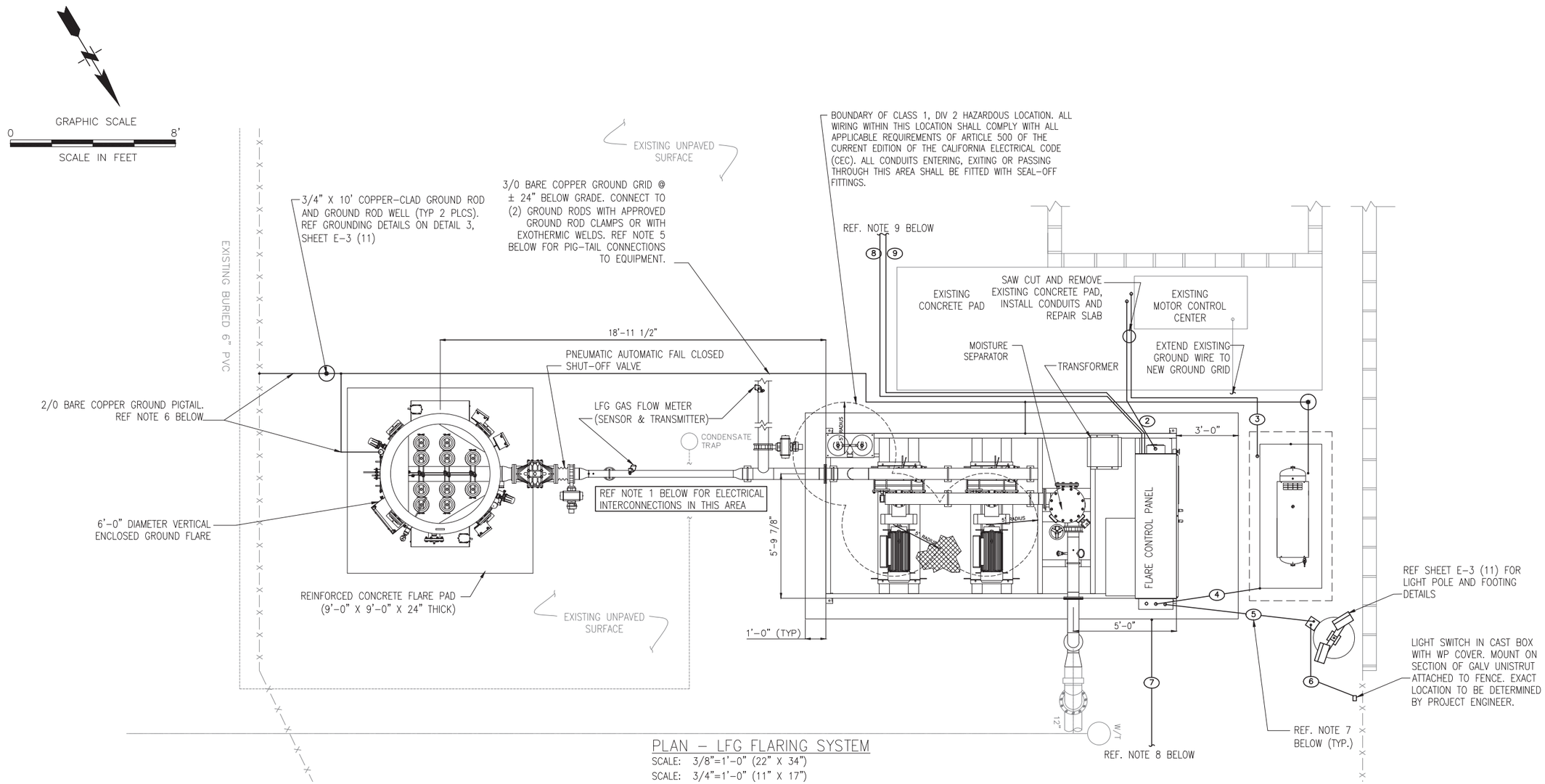

PLAN – LFG FLARING SYSTEM

SCALE: 3/8"=1'-0" (22" X 34")

SCALE: 3/4"=1'-0" (11" X 17")

NOTES:

1. THE BLOWER SKID AND THE FLARE ARE PREWIRED BY THE FLARE MANUFACTURER. THE INTERCONNECTING WIRING BETWEEN THE SKID, THE LANDFILL GAS VALVE, THE FLOW TRANSMITTER AND THE FLARE HAS BEEN REMOVED AND COILED AT THE END OF THE SKID. THE ELECTRICAL CONTRACTOR SHALL FURNISH AND INSTALL THE REQUIRED CONDUITS, PULL-IN THE COILED WIRING AND MAKE THE FINAL CONNECTIONS AS DIRECTED BY THE FLARE MANUFACTURER THE CONDUITS SHALL BE RUN ABOVE GRADE AND SHALL BE SUPPORTED AS REQUIRED.
2. THE AREA BELOW GRADE IS CLASSIFIED AS A CLASS 1, DIV 1 AREA, ALL WIRING IN THIS CLASSIFIED AREA SHALL BE INSTALLED TO COMPLY WITH ALL APPLICABLE REQUIREMENTS OF ARTICLE 500 OF THE CALIFORNIA ELECTRICAL CODE (CEC).
3. USE TYPE EYS OR EZS SEALOFF FITTINGS ON ALL OTHER BELOW GRADE CONDUITS @ ±8" ABOVE GRADE WHERE THEY ENTER OR EXIT BELOW GRADE.
4. WITH THE EXCEPTION OF SHORT LENGTHS OF METALLIC SEALTITE FLEXIBLE CONDUIT, ALL CONDUIT SHALL BE RIGID GALVANIZED STEEL. ALL JOINTS AND TERMINATIONS SHALL BE MADE WITH THREADED FITTINGS.
5. ALL WIRE SHALL BE STRANDED COPPER, TYPE THHN/THWN. ALL INSTRUMENTATION AND THERMOCOUPLE WIRE SHALL BE FURNISHED BY THE FLARE MANUFACTURER.
6. THE GROUND GRID SHALL CONNECTED TO THE EXISTING MOTOR CONTROL CENTER, THE FLARE, THE AIR COMPRESSOR, THE METAL FENCE AND THE BLOWER SKID WITH 2/0 BARE COPPER PIGTAILS. PIGTAILS SHALL BE CONNECTED TO GRID BY MEANS OF EXOTHERMIC WELDS AND TO EQUIPMENT WITH MECHANICAL OR CRIMPED LUGS. REF GROUNDING DETAILS ON SHEET E-3 (11).
7. REFERENCE THE CONDUIT/WIRE SCHEDULE ON SHEET E-2 (10) FOR SIZE AND QUANTITIES OF CONDUITS AND WIRES.
8. INSTALL NEW 1" CONDUIT FROM NEW FLARE CONTROL PANEL TO EXISTING FLOW AND TEMPERATURE INSTRUMENTATION FOR FLARE 2 LOCATED IN EXISTING MAINTENANCE SHOP. PULL-IN INSTRUMENTATION CABLES AS REQUIRED TO ALLOW NEW OPERATOR INTERFACE TERMINAL TO READ THE EXISTING FLARE SIGNALS. CONDUITS TO BE INSTALLED UNDERGROUND IN COMPLIANCE WITH NOTES 2 AND 3 ABOVE.
9. INSTALL (2) NEW 1" CONDUITS FROM NEW FLARE CONTROL PANEL TO EXISTING FLARE 2 CONTROL PANEL. CONDUITS TO BE INSTALLED UNDERGROUND IN COMPLIANCE WITH NOTES 2 AND 3 ABOVE. REF CONDUIT/WIRE SCHEDULE ON SHEET E-2 (10) FOR CONDUCTORS.

CONTROL SYSTEM NOTES:

1. THE FLARE MANUFACTURER, IN ADDITION TO THE STANDARD CONTROLS FOR A SINGLE FLARE, SINGLE BLOWER OPERATING AND A SINGLE BLOWER IN STAND-BY MODE SHALL INCORPORATE THE FOLLOWING SPECIAL FUNCTIONS FOR THIS INSTALLATION:
   - 1.1. SELECTION OF EITHER NEW BLOWER TO SUPPLY LANDFILL GAS TO EXISTING FLARE 2. THIS SHALL BE ACCOMPLISHED BY CLOSING THE LFG VALVE TO THE NEW FLARE AND OPENING THE "BYPASS VALVE" TO DIRECT THE LANDFILL GAS TO THE EXISTING FLARE WHEN THE EXISTING FLARE CONTROL SYSTEM ISSUES A BLOWER RUN COMMAND AND ONE OF THE NEW BLOWERS HAS BEEN SELECTED FOR THE EXISTING FLARE.
   - 1.2. BLOWER SPEED WHEN SUPPLYING LFG TO THE EXISTING FLARE SHALL BE CONTROLLED BY MEANS OF THE SAME LOGIC USED TO CONTROL THE NEW FLARE IE: THE OPERATOR SHALL SELECT THE MODE OF OPERATION (FLOW OF VACUUM) AND THE APPROPRIATE SETPOINT DESIRED FOR THE FLARE OPERATING CONDITIONS.
   - 1.3. THE EXISTING BLOWER LOGIC IN THE EXISTING FLARE 2 CONTROL PANEL SHALL BE USED FOR THE BLOWER RUN COMMAND TO THE NEW BLOWERS, ALL EXISTING SAFETYS AND PERMISSIVES SHALL BE IN FULL OPERATION.
   - 1.4. THE NEW SYSTEM OPERATOR INTERFACE TERMINAL SHALL HAVE A SCREEN DEDICATED TO MONITORING THE STATUS, LFG FLOW AND STACK TEMPERATURE(S) OF THE EXISTING FLARE 2. THE PLC SHALL HAVE ADEQUATE ANALOG AND DIGITAL INPUTS DEDICATED TO THESE FUNCTIONS.
   - 1.5. FINAL OPERATIONAL/MONITORING FEATURES FOR THE EXISTING FLARE 2 SHALL BE DETERMINED BY THE OWNER'S PROJECT ENGINEER PRIOR TO THE FLARE MANUFACTURER FINALIZING THEIR PROPOSAL.

DRAWING IS HALF-SIZE AT 11x17

ISSUED FOR CONSTRUCTION

REGISTERED PROFESSIONAL ENGINEER
EUGENE R. VANDERBOOM
E8046
EXP. 9-30-14
ELECTRICAL
STATE OF CALIFORNIA

NO.	REVISION	DATE

SHEET TITLE: SITE ELECTRICAL PLAN

PROJECT TITLE: FLARE REPLACEMENT
28th STREET LANDFILL
SACRAMENTO COUNTY, CALIFORNIA

28th STREET LANDFILL
CITY OF SACRAMENTO
SACRAMENTO, CALIFORNIA

SCS ENGINEERS
ENVIRONMENTAL CONSULTANTS
3117 FITE CIRCLE, SUITE 108
SACRAMENTO, CA 95827
PH. (916) 361-1297 FAX. (916) 361-1299

PROJ. NO. 01197137.05 T106 | DWN. BY: MJE | CAD FILE: SHT-9.SEP.031214 | DSN. BY: MJE | CHK. BY: D. VONASEK | APP. BY: DV

DATE: 02-10-14

SCALE: AS SHOWN

DRAWING NO. E-1 (9)

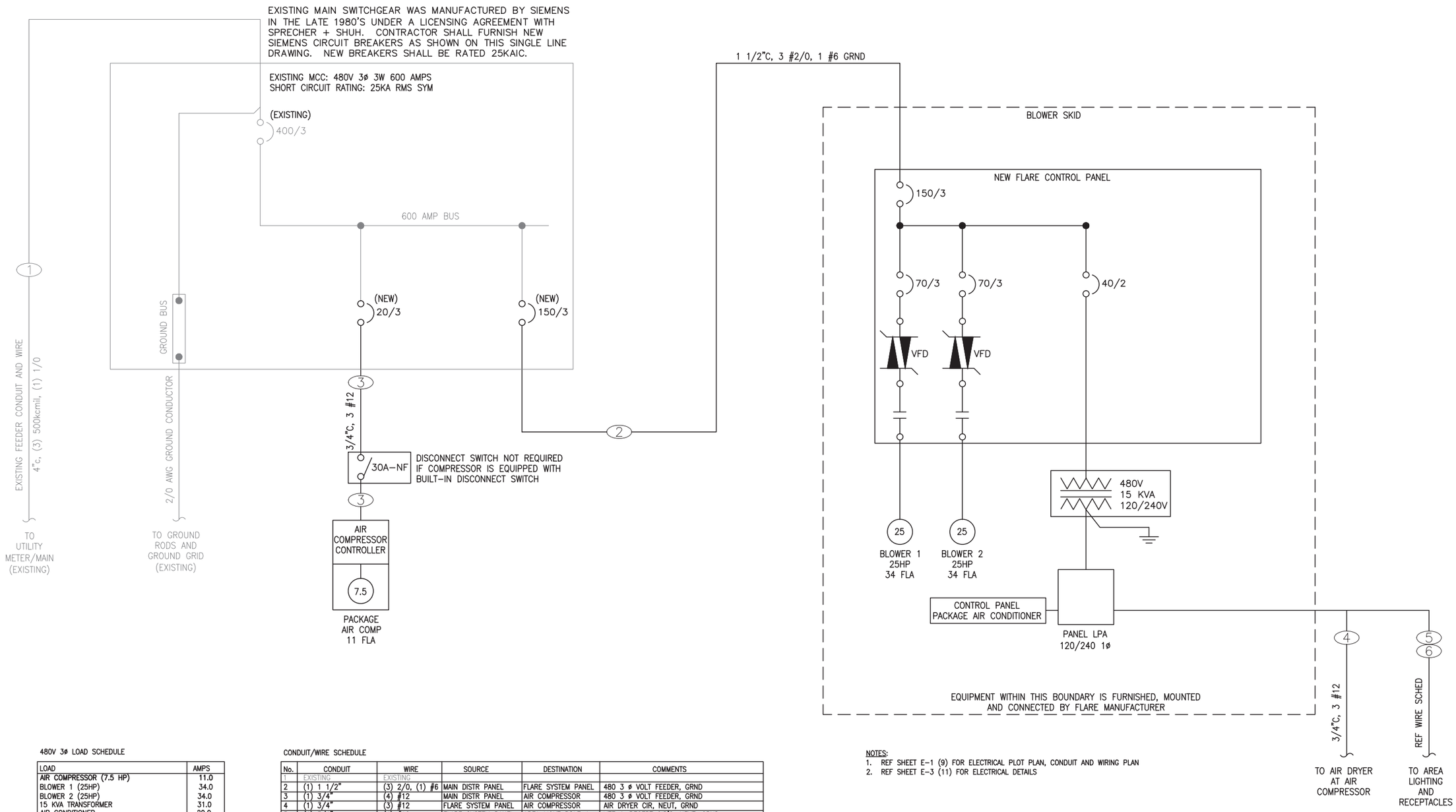

480V 3ø LOAD SCHEDULE

LOAD	AMPS
AIR COMPRESSOR (7.5 HP)	11.0
BLOWER 1 (25HP)	34.0
BLOWER 2 (25HP)	34.0
15 KVA TRANSFORMER	31.0
AIR CONDITIONER	20.0
TOTAL CONNECTED	130.0
25% LARGEST MOTOR	8.5
TOTAL AMPS	138.5

CONDUIT/WIRE SCHEDULE

No.	CONDUIT	WIRE	SOURCE	DESTINATION	COMMENTS
1	EXISTING	EXISTING			
2	(1) 1 1/2"	(3) 2/0, (1) #6	MAIN DISTR PANEL	FLARE SYSTEM PANEL	480 3 ø VOLT FEEDER, GRND
3	(1) 3/4"	(4) #12	MAIN DISTR PANEL	AIR COMPRESSOR	480 3 ø VOLT FEEDER, GRND
4	(1) 3/4"	(3) #12	FLARE SYSTEM PANEL	AIR COMPRESSOR	AIR DRYER CIR, NEUT, GRND
5	(1) 3/4"	(4) #12	FLARE SYSTEM PANEL	AREA LIGHT POLE 1	LITE & RECEPT CIR'S, NEUT, GRND
6	(1) 3/4"	(5) #12	AREA LIGHT POLE 1	AREA LIGHT SWITCH	LITE & RECEPT CIR'S, SW LEG, NEUT, GRND
7	(1) 1"	SEE NOTE 7 BELOW	FLARE 1 CNTRL PNL	MAINTENANCE SHOP	EXISTING FLARE 2 INSTRUMENTATION SIGNALS
8	(1) 1"	(25) #14	FLARE 1 CNTRL PNL	FLARE 2 CNTRL PNL	INTERFACE WIRING
9	(1) 1"	SEE NOTE 9 BELOW	FLARE 1 CNTRL PNL	FLARE 2 CNTRL PNL	INTERFACE INSTRUMENTATION
10					

NOTE 7: (2) BELDEN 8762 CABLES, (3) 20 AWG TYPE K T/C EXTENSION CABLES (IF REQUIRED)
NOTE 9: (4) BELDEN 8762 CABLES, (3) 20 AWG TYPE K T/C EXTENSION CABLES (IF REQUIRED)

NOTES:
1. REF SHEET E-1 (9) FOR ELECTRICAL PLOT PLAN, CONDUIT AND WIRING PLAN
2. REF SHEET E-3 (11) FOR ELECTRICAL DETAILS

DRAWING IS HALF-SIZE AT 11x17

ISSUED FOR CONSTRUCTION

REGISTERED PROFESSIONAL ENGINEER
EUGENE R. VANDERFORD
E8046
EXP. 9-30-14
ELECTRICAL
STATE OF CALIFORNIA

NO.	REVISION	DATE

SHEET TITLE: SINGLE LINE DIAGRAM AND LOAD SCHEDULE

PROJECT TITLE: FLARE REPLACEMENT
28th STREET LANDFILL
SACRAMENTO COUNTY, CALIFORNIA

28th STREET LANDFILL
CITY OF SACRAMENTO
SACRAMENTO, CALIFORNIA

SCS ENGINEERS
ENVIRONMENTAL CONSULTANTS
3117 FITE CIRCLE, SUITE 108
SACRAMENTO, CA 95827
PH: (916) 361-1297 FAX: (916) 361-1299

PROJ. NO. 01197137.05 T1006 | DWN. BY: MJE | ACAD FILE: SHT-10_SL_021314
DSN. BY: MJE | CHK. BY: D. VONASEK | APP. BY: DV

DATE: 02-10-14

SCALE: AS SHOWN

DRAWING NO. E-2 (10)

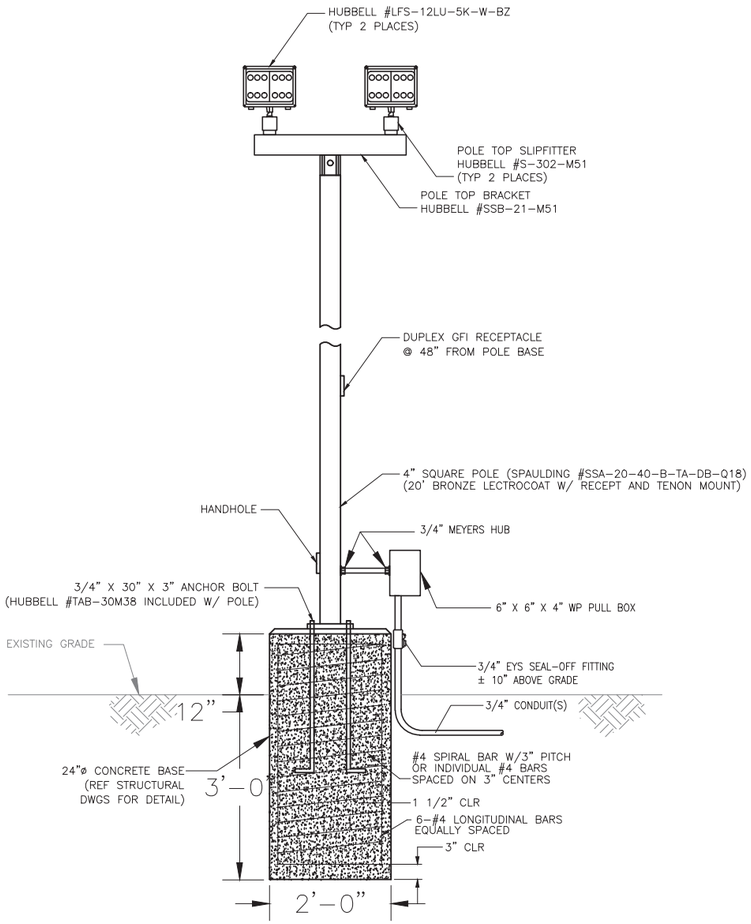

AREA LIGHTING DETAIL (1/E-1)
N.T.S.

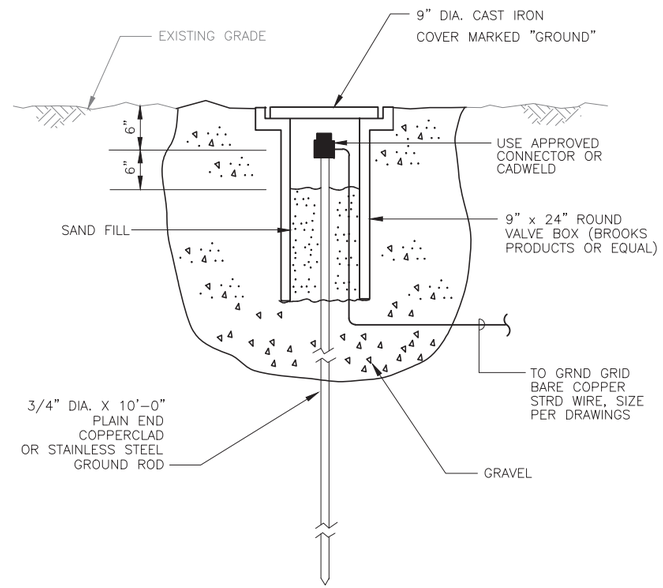

GROUND ROD WELL AND ROD DETAIL (2/E-1)
N.T.S.

NOTES:

1. REFERENCE SHEET E-1 (9) FOR LOCATION OF GROUND GRID, GROUND RODS AND GROUND ROD WELLS, MAIN PANEL AND ALL OTHER EQUIPMENT. CONTRACTOR SHALL EXTEND A 2/0 GROUNDING PIGTAIL FROM THE GROUND GRID TO THE MAIN PANEL AND MAKE ALL GROUNDING AND BONDING CONNECTIONS AS REQUIRED BY THE LATEST VERSION OF THE CALIFORNIA ELECTRICAL CODE.
2. REFERENCE SHEET E-2 (10) FOR CONDUIT AND WIRE SIZES.
3. ALL UNISTRUT, UNISTRUT FITTINGS AND SPRING NUTS SHALL BE GALVANIZED. ALL ASSEMBLY BOLTS, WASHERS AND LOCK WASHERS SHALL BE 3/8" OR 1/2" STAINLESS STEEL.
4. FENCE GATE POST GROUNDING IS SHOWN FOR A SINGLE GATE ENTRY, DOUBLE GATE ENTRIES AND OTHER FENCE POSTS WILL USE SIMILAR GROUNDING METHODS AND MATERIALS. (DETAIL IS SHOWN FOR CHAIN-LINK FENCE BUT SHALL APPLY TO ALL METALLIC FENCING)
5. ALL CONDUITS SHALL BE RIGID GALVANIZED STEEL (RGS). THE AREA BELOW GRADE IS CLASSIFIED AS HAZARDOUS, CLASS I DIV 1. ALL WIRING IN THIS CLASSIFIED AREA SHALL BE IN COMPLIANCE WITH THE REQUIREMENTS OF THE LATEST VERSION OF THE THE CALIFORNIA ELECTRICAL CODE. SEALOFF FITTINGS SHALL BE INSTALLED ON ALL UNDERGROUND CONDUITS EXTENDING ABOVE GRADE AT ±8" ABOVE GRADE. ALL CONDUIT JOINTS AND TERMINATIONS SHALL BE MADE WITH THREADED FITTINGS. .
6. THE FLARE BLOWER SKID IS PRE-ASSEMBLED AND PRE-WIRED BY THE FLARE MANUFACTURER. FLARE MANUFACTURER WILL COIL SUFFICIENT WIRE AND CABLE TO EXTEND FROM THE SKID TO THE LANDFILL GAS VALVE, THE LANDFILL GAS VALVE FOR THE NEW FLARE, THE LANDFILL GAS FLOW TRANSMITTER FOR THE NEW FLARE, THE LANDFILL GAS BYPASS VALVE TO FLARE B, THE LANDFILL GAS FLOW TRANSMITTER FOR FLARE B AND THE TERMINAL BOXES AT THE NEW FLARE. THE CONTRACTOR SHALL FURNISH AND INSTALL THE REQUIRED CONDUITS, PULL-IN AND MAKE THE FINAL TERMINATIONS OF THE COILED CABLES AND WIRES AS DIRECTED BY THE FLARE MANUFACTURER.

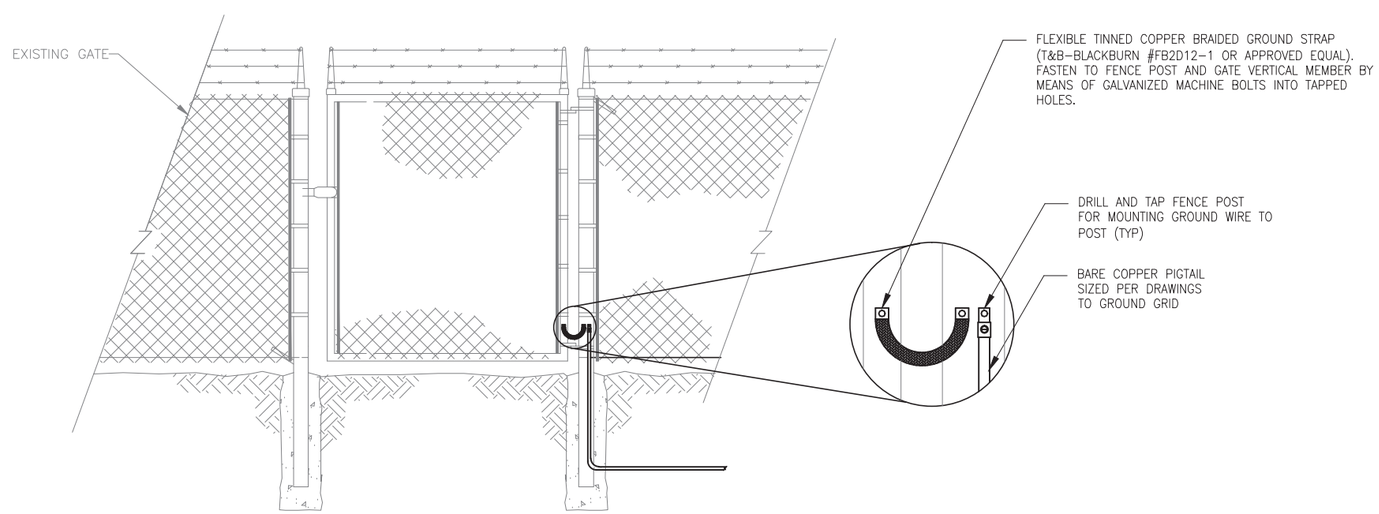

FENCE GATE POST GROUNDING DETAIL (3/E-1)
N.T.S.

DRAWING IS
HALF-SIZE AT 11x17

ISSUED FOR CONSTRUCTION

REGISTERED PROFESSIONAL ENGINEER
EUGENE R. VANDEGRIFT
E8046
EXP. 9-30-14
ELECTRICAL
STATE OF CALIFORNIA

NO.	REVISION	DATE

SHEET TITLE: ELECTRICAL DETAILS

PROJECT TITLE: FLARE REPLACEMENT
28th STREET LANDFILL
SACRAMENTO COUNTY, CALIFORNIA

28th STREET LANDFILL
CITY OF SACRAMENTO
SACRAMENTO, CALIFORNIA

SCS ENGINEERS
ENVIRONMENTAL CONSULTANTS
3117 FITE CIRCLE, SUITE 108
SACRAMENTO, CA 95827
PH. (916) 361-1297 FAX. (916) 361-1299

PROJ. NO. 01197137.05 T106 | DWN. BY: MJE | CHK. BY: D. VONASEK | ACAD FILE: SHEET 11 E1_021314 | APP. BY: DV | DSN. BY: MJE

DATE: 02-10-14

SCALE: AS SHOWN

DRAWING NO. E-3 (11)

City of SACRAMENTO
Recycling & Solid Waste

May 21, 2014
Addendum No. 1 to Bid No. B14131771001
for 28th Street Landfill Flare Replacement

This addendum is in response to questions received via email through May 19, 2014 and asked at the mandatory pre-bid meeting on May 15, 2014 at the City's 28th Street Landfill.

1. **Is there lead paint on the flare stack?**
   The City believes there is no lead paint on the flare stack, or other hazardous materials within the flare equipment to be replaced; however, it is in the Contractor's best interest to have a sample tested and analyzed to confirm the presences of lead, or lack thereof, prior to demolishing the flare.

2. **Update to Bid Item 11**
   Please refer to the revised Bid Form (attached).

3. **Shutting off gas flow during project**
   Contractor will coordinate with the City on flare shutdown. City will perform shutting down and restart of the Blower Flare System.

4. **What are the requirements from the Sacramento Metropolitan Air Quality Management District (SMAQMD) for flare repairs?**
   Refer to the attached Permit to Operate (PTO) for downtime requirements.

5. **Copy of Permit to Operate from SMAQMD**
   A copy of the PTO is attached for reference.

6. **Building Permit**
   The Contractor is requirement to obtain the building permit for the work for electrical, and construction of pads, etc. SCS Engineers will procure the Authority to Construct (ATC) and PTO for the project.

7. **480V Conduits**
   480V conduits shall be installed below grade per NEC Requirements. Please refer to Contract Drawing [E-1 (9)]. Conduits for electrical interconnection to existing flare panel(s), including maintenance shack shall also be below-grade and installed per NEC Requirements.

8. **Underground Services Alert (USA)**
   The contractor will cover these costs, including any other survey work to determine the extent of subsurface utility conduits, prior to starting the Contract Work.

General Services
Recycling & Solid Waste
916-808-4900
2812 Meadowview Road, Bldg 1
Sacramento, CA 95832
www.sacrecycle.org

9. Concrete Strength Tests

Per Technical Specifications, Section 03300 2.02 A. 5., cement concrete mix is to have a minimum compressive strength of 3,000 PSI at 28 days. Construction Drawing No. 7 also indicates the compression strength requirement for the work in the Concrete Notes section. If flare pad concrete testing results indicate that the compressive strength is greater than the required strength at 7 or 21 days, the Contractor may proceed with the flare installation work if approved by the Engineer.

10. Drawing #9, Site Electrical Plan

Bidders requested clarification on the location of the 1 inch conduit from the new flare system to the maintenance shack. The maintenance shack is located to the north and west of the meter main for the site.

11. Adjacent Construction Projects

There may be two other construction projects in progress in areas adjacent to this flare replacement project:

a. Solar Panel Installation
Conergy is installing a solar panel array at Sutter's Landing Park. Along with construction traffic, there is a pad being installed directly south of the flare station. None of that project is to enter the flare station enclosure, or affect it directly, but there may be issues related to space for equipment.

b. McKinley Village Project
Also directly south of the flare station enclosure, and the pad mentioned above, is an access road that will become A Street. This road connects to a bridge over Business 80 to the east. This will result in traffic from construction equipment for this project, as well as possible road improvements to A Street. Contractor needs to arrange access to the flare station that will not impede work on the McKinley Village Project.

Contractor to coordinate staging area(s) with the City prior to and during the course of work under the Contract.

12. Water Supply

There is a water supply line located within the flare enclosure that is tied into the City water main.

13. Gate Key

There are two locked gates to the flare enclosure: one to enter from 28th Street, and another to enter the enclosure itself. Both gates are on the same key. The guard at the 28 Street Corporation Yard will open the 28th Street gate at 6:00 am every work day. Keys will be provided to the awarded contractor.

14. Auto-Notification System

The Auto-Notification system is included in the Contract work and specified for the new control system that will manage both the old and new flare equipment from one central point. Refer to Technical Specifications, Section 11187 2.04 D. 2., for auto-dialer notification requirements. The auto-dialer shall also be capable of sending notifications (shut-down or other alarms) for the existing flare to be interconnected.

15. What State Contractors License Classification is required for Prime Bidders?

A Class A Contractor license is required.

16. How many days are bids required to be valid after bid opening?

The lowest qualifying bid submitted will be selected for contract. There will not be an opportunity to change price once the bid is submitted. The bid bond guarantees the price. If awarded the Agreement, the undersigned agrees to sign said Agreement and furnish the necessary surety bonds and insurance certificates within ten (10) days after receipt of the notice of award of Agreement, and to begin work within fifteen (15) days after the Notice to Proceed by the City.

17. When does the City anticipate Award of the Contract following Bid Opening?

Due to the dollar amount, City Council will need to approve the contract and that is scheduled for 7/15/14.

18. Please confirm the Contract Time in terms of Working Days or Calendar Days from Notice to Proceed to Final Completion.

259 Calendar Days

CONSTRUCTION BID WORKSHEET
FLARE REPLACEMENT DESIGN
SACRAMENTO CITY LANDFILL, SACRAMENTO, CALIFORNIA

4/21/2014
Revised 5/19/2014

Item No.	Description	Unit		Unit Cost	Amount
1	Mobilization & demobilization, including dust, noise and traffic control, observing health and safety provisions at all times, equipment storage or relocation per City, clean-up and site restoration, and coordination with landfill operator (City) or their authorized representative.	1	ls		
2	Survey including horizontal and vertical controls, staking the locations of the vertical LFG extraction wells, horizontal LFG collectors and LFG header and lateral alignments, condensate pumping system and LFG flaring system.	1	ls		
3	Utility location survey and protection of all existing above- and below-grade utilities in the work area	1	ls		
4	Furnish and install above-grade high-density polyethylene (HDPE) ping and fittings, including LFG header connection piping and Unistrut supports; and, reinstallation of piping and fitting required for connection and reuse of equipment within the BFF.	1	ls		
5	Furnish, install and test skid-mounted LFG Flaring System, including existing utility clearances and protection, removal and restoration of existing roadway surfaces, grading and compaction, reinforced concrete pads and slabs, blower skid, vertical enclosed ground flare, all controls and instrumentations, piping valves, pipe supports, gauges, controls, lighting; complete in place, tested and ready for use.	1	ls		
6	Provide interconnection between existing operational flare and new LFG Flaring System control panel; complete in place, tested and ready for use. Work includes, connection and below-grade electrical work to existing control panel(s) for existing John Zink flare system at site, per the electrical drawings. Contractor to coordinate work with new flare equipment vendor and shall provide their electrical contractor for flare vendor technician for an estimated 2 days during start-up of new LFG Flaring System.	1	ls		
7	Furnish, install and test air rotary screw compressor, including drive motor, starter cubical, oil system, air system, integral refrigerated dryer, electro-pneumatic control panel, air receiver tank, reinforced concrete pad, overhead cover. Service air connections with quick-disconnect shall be provided to the flaring system.	1	ls		
8	Remove and replace chain link fencing and gates if necessary to be removed for construction of new blower/flare station (BFS) equipment.	1	lf		
9	Site electrical work for BFS System and electrical grounding for said system, including coordination with Utility Provider, complete in place, tested and ready for use.	1	ls		
10	Prepare as-built drawings, including red-line markups, vendor As-Built Drawings, and any other affiliated information as set forth in the Contract Technical Specifications.	1	ls		
11	De-activate and/or dismantle existing BFS components and demolish existing concrete pads within the work area. Reuse, reinstall, and re-activate blower and ancillary equipment in other BFF site location. Includes all electrical reassembly and removal of old components (Blowers, compressors, condensate tank, miscellaneous piping and BFS components not needed for the new system to be disposed of by proper means or recycled as appropriate), and connection and reactivation of reused equipment. Reactivation includes all necessary fittings and components (e.g., expansion couplings, etc.) required to retrofit blower at new location. Includes grading and restoration of the dismantling work area to prepare for new concrete pads and equipment.	1	ls		
12	Connection of existing condensate sump to new BFS System and existing condensate storage tank, activation, complete and in place, and ready for operation. Includes, all necessary electrical, pneumatic, and plumbing required to provide connectivity and be operable with the new BFS components.	1	ls		
13	Perform flare source test per SMAQMD requirements; complete as specified and directed by the Engineer.	1	ls		
	SUBTOTAL				
	TOTAL ESTIMATED COST				

Notes:

ls = lump sum
lf = lineal feet

777 12th Street 3rd Floor
Sacramento, CA 95814

(916) 874-4800
fax (916) 874-4899

SACRAMENTO METROPOLITAN

AIR QUALITY
MANAGEMENT DISTRICT

TITLE V FEDERAL OPERATING PERMIT
AND
SMAQMD RULE 201 PERMITS TO OPERATE

TITLE V PERMIT NO:
TV2006-08-01

TITLE V PERMIT ISSUED:
March 27, 2007

TITLE V PERMIT EXPIRES:
March 27, 2012

PERMIT ISSUED TO:
28th Street Landfill
Solid Waste Division - Department of Utilities
City of Sacramento
2812 Meadowview Road
Sacramento, CA 95832

FACILITY LOCATION:
20 28th Street
Sacramento, CA

RESPONSIBLE OFFICIAL:
Gary Reents, Director
Department of Utilities
City of Sacramento
(916) 808-1433

CONTACT PERSON:
John Olesen
Senior Landfill Engineering Technician
Solid Waste Division - Department of Utilities
City of Sacramento
(916) 264-7132

NATURE OF BUSINESS:
Municipal Solid Waste Landfill

STANDARD INDUSTRIAL CLASSIFICATION (SIC):
4953

Larry Greene
SMAQMD Air Pollution Control Officer

by: Bruce Nixon
Bruce Nixon, P.E.
Air Quality Engineer

TABLE OF CONTENTS

PERMIT SUMMARY 3

FACILITY DESCRIPTION 5

FEDERALLY ENFORCEABLE GENERAL REQUIREMENTS
Title V Permit Modifications And Renewal 6
Compliance 7
Reports and Recordkeeping 8
Ringelmann Chart 11
Particulate Matter 11
Sulfur Compounds 12
Architectural Coating 12
Compliance 13
Equipment Breakdowns 13
Title VI Requirements (Ozone Depleting Substances) 14
Payment of Fees 14
Accidental Releases 14
Startup, Shutdown and Malfunction Plan 15

LOCAL (NON-FEDERALLY ENFORCEABLE) GENERAL REQUIREMENTS
Applicability 16
Local Permit Renewal 16
General 16
Equipment Operation 16
Equipment Breakdowns 17

FEDERALLY ENFORCEABLE EQUIPMENT SPECIFIC REQUIREMENTS
- Landfill and Landfill Gas Collection System
  [SMAQMD Rule 201 Permit No. 12762(Rev01)] 20
- Landfill Gas Flare 1990
  [SMAQMD Rule 201 Permit No. 9314(Rev01)] 29
- Landfill Gas Flare 1997
  [SMAQMD Rule 201 Permit No. 14749(Rev01)] 36

LOCAL (NON-FEDERALLY ENFORCEABLE) EQUIPMENT SPECIFIC REQUIREMENTS
None Listed

INSIGNIFICANT EMISSION UNITS 43

PERMIT SUMMARY

This permit shall serve as a conditional permit to operate pursuant to SMAQMD Rule 201 (General Permit Requirements) and SMAQMD Rule 207 (Title V - Federal Operating Permit Program). Requirements identified in the permit as non-federally enforceable are not enforceable by U.S. EPA or public. However, they are enforceable by the Sacramento Metropolitan Air Quality Management District (SMAQMD)

Your application for this air quality Permit to Operate was evaluated for compliance with SMAQMD, State of California and federal air quality rules and regulations. The following listed rules are those that were found to be applicable at the time of permit review, based on the information submitted with the Title V permit application.

Citation	Description	Rule Adoption Date	Federally Enforceable ?
SMAQMD Rule 201	General Permit Requirements (SIP approved)	11-20-1984	Yes
SMAQMD Rule 201	General Permit Requirements (Not SIP approved)	04-26-2001	No
SMAQMD Rule 202	New Source Review (SIP approved)	11-20-1984	Yes
SMAQMD Rule 202	New Source Review (Not SIP approved)	02-24-2005	No
SMAQMD Rule 207	Title V - Federal Operating Permit Program (not SIP approved but rule is applicable as part of U.S. EPA approval of the SMAQMD Title V program)	04-26-2001	Yes
SMAQMD Rule 301	Permit Fees - Stationary Source (not SIP approved but Title V fees in rule applicable as part of U.S. EPA approval of the SMAQMD Title V program)	07-01-2006	Yes (Title V provisions only)
SMAQMD Rule 401	Ringelmann Chart	04-05-1983	Yes
SMAQMD Rule 402	Nuisance	08-03-1977	No
SMAQMD Rule 403	Fugitive Dust	11-29-1983	Yes
SMAQMD Rule 404	Particulate Matter	11-20-1984	Yes
SMAQMD Rule 406	Specific Contaminants	11-29-1983	Yes
SMAQMD Rule 420	Sulfur Content of Fuels	11-29-1983	Yes

Citation	Description	Rule Adoption Date	Federally Enforceable ?
SMAQMD Rule 442	Architectural Coatings	09-05-1996	Yes
SMAQMD Rule 442	Architectural Coatings	05-24-2001	No
SMAQMD Rule 602	Breakdown Conditions: Emergency Variance	11-29-1983	No
SMAQMD Rule 801 and U.S. EPA NSPS (B)	Standards of Performance for Municipal Solid Waste Landfills [40 CFR 60 Subpart WWW (begin at 60.750)]	03-12-1996 (A)	Yes
U.S. EPA NESHAP	National Emission Standards for Hazardous Air Pollutants: Municipal Solid Waste Landfills [40 CFR 63 Subpart AAAA (begin at 63.1930)]	01-16-2003 (A)	Yes

(A) U.S. EPA promulgation date

Future changes in prohibitory rules may establish more stringent requirements that may, at the SMAQMD level, supersede the conditions listed here. For Title V purposes however, the federally enforceable requirements are those found in the Title V permit. Federally enforceable provisions of the Title V permit do not change until the Title V permit is revised.

FACILITY DESCRIPTION

Permit Background

Permit Action	Date Issued	Federal Operating Permit No.
Initial Title V Federal Operating Permit	03-27-2002	TV1996-08-01
1st Minor Modification	02-03-2004	TV1996-08-02

Current Permitting Action

This permit action is the first renewal of the initial Title V Federal Operating Permit, TV1996-08-01, issued 03-27-2002 with a five year term and an expiration date of 03-27-2007.

This permit renewal will be assigned the permit number TV2006-08-01.

Facility Description

The City of Sacramento's 28th Street Landfill is an inactive municipal solid waste landfill located at 28th and A streets in the City of Sacramento. The site is operated by the City of Sacramento Department of Utilities, Solid Waste Division. The landfill footprint, which is comprised of Waste Management Unit A (WMU-A) and Waste Management Unit B (WMU-B), is approximately 107 acres. The 28th Street Landfill began accepting waste into WMU-A in 1968 and completed filling WMU-A in 1986. The 28th Street Landfill began accepting waste into WMU-B in 1986 and completed filling WMU-B in 1994. The landfill stopped receiving waste in September 1994.

Decomposing waste encapsulated within the landfill produces a gas by-product that is primarily composed of methane, carbon dioxide and non-methane organic compounds (NMOC). Landfill gas (LFG) is primarily emitted through two sources. LFG can be emitted as fugitive gas through cover soils or through a landfill gas collection system.

Gas Recovery Systems, LLC operates the landfill gas collection system that serves WMU-A and WMU-B under a contract with the City of Sacramento. The collected landfill gas from WMU-A and WMU-B is sent to Blue Diamond Almond Growers as fuel for their boiler and/or to one of two landfill gas flares on the landfill site for destruction.

The City of Sacramento operates the landfill gas collection system that serves the landfill's perimeter wells. The collected landfill gas from the perimeter wells is also sent to Blue Diamond Almond Growers as fuel for their boiler and/or to one of two landfill gas flares on the landfill site for destruction.

There are two landfill gas flares at the 28th Street Landfill. The first was constructed in 1990 and the second in 1997. The 1990 landfill gas flare is used as the primary flare and is designed to operate 24 hours/day and 365 days/year. If the 1990 landfill gas flare becomes inoperable, due to upset conditions or maintenance needs, then the 1997 landfill gas flare is used. The 1990 landfill gas flare and the 1997 landfill gas flare do not operate at the same time.

FEDERALLY ENFORCEABLE GENERAL REQUIREMENTS

TITLE V PERMIT MODIFICATIONS AND RENEWAL

1. The owner or operator of a stationary source shall submit to the SMAQMD Air Pollution Control Officer a complete Title V permit application for renewal no later than 12 months prior to the expiration date of the Title V permit.
[SMAQMD Rule 207 Section 301.4]

2. The owner or operator of a stationary source shall submit to the SMAQMD Air Pollution Control Officer a complete Title V permit application for minor Title V permit modification when applicable. The application shall be submitted after receiving any required preconstruction permit from the SMAQMD and before commencing operation associated with the Minor Title V permit modification.
[SMAQMD Rule 207 Section 301.6]

3. The owner or operator of a stationary source shall submit to the SMAQMD Air Pollution Control Officer a complete Title V permit application for Significant Title V permit modification when applicable. The application shall not be submitted prior to receiving any required preconstruction permit from the SMAQMD but no later than 12 months after commencing an operation associated with the Significant Title V permit modification. Where an existing federally enforceable Title V permit condition would prohibit such change in operation or the stationary source is not required to obtain a preconstruction permit, the owner or operator must obtain a Title V permit modification before commencing operation.
[SMAQMD Rule 207 Section 301.7]

4. The applicant shall submit to the SMAQMD Air Pollution Control Officer timely updates to the Title V application as new applicable requirements become applicable to the source.
[SMAQMD Rule 207 Section 302.1]

5. The applicant shall submit to the SMAQMD Air Pollution Control Officer any additional information necessary to correct any incorrect information in the Title V permit application upon becoming aware of such incorrect submittal or if the applicant is notified by the SMAQMD Air Pollution Control Officer of such incorrect submittal.
[SMAQMD Rule 207 Section 302.2]

6. The applicant shall submit to the SMAQMD Air Pollution Control Officer any additional information relating to the Title V application within 30 days if such information is requested in writing by the SMAQMD Air Pollution Control Officer.
[SMAQMD Rule 207 Section 302.3]

7. Title V permit expiration terminates the stationary source's right to operate unless a timely and complete Title V permit application for renewal has been submitted and the stationary source complies with SMAQMD Rule 207 Sections 303.1(a), (b), (c) and (d), in which case the existing Title V permit will remain in effect until the Title V permit renewal has been issued or denied.
[SMAQMD Rule 207 Section 303.2]

FEDERALLY ENFORCEABLE GENERAL REQUIREMENTS

8. Any Title V application form, report, or compliance certification submitted pursuant to a federally enforceable requirement in this permit shall contain certification by a responsible official. The certification shall state that, based on information and belief formed after reasonable inquiry, the statements and information in the document are true, accurate and complete.
[SMAQMD Rule 207 Section 304]

9. This Title V permit shall have a 5-year fixed term from the date of issuance. The Title V permit shall have a new 5-year fixed term from the date of final action on reopening if the responsible official chooses to submit to the SMAQMD a complete Title V application for renewal upon reopening of the Title V permit pursuant to Sections 411 or 412 of SMAQMD Rule 207, and the Title V permit is renewed according to the administrative procedures listed in Sections 401 through 408 of SMAQMD Rule 207.
[SMAQMD Rule 207 Section 306]

COMPLIANCE

10. The permittee must comply with all conditions of the Title V permit.
[SMAQMD Rule 207 Section 305.1(k)(1)]

11. It shall not be a defense for a permittee in an enforcement action that it would have been necessary to halt or reduce the permitted activity in order to maintain compliance with the conditions of the Title V permit.
[SMAQMD Rule 207 Section 305.1(k)(2)]

12. This Title V permit may be modified, revoked, reopened, and reissued, or terminated for cause.
[SMAQMD Rule 207 Section 305.1(k)(3)]

13. The permittee shall furnish to the SMAQMD Air Pollution Control Officer, within a reasonable time, any information that the SMAQMD Air Pollution Control Officer may request in writing to determine whether cause exists for modifying, revoking and reissuing, or terminating the permit pursuant to Section 411 of SMAQMD Rule 207, or to determine compliance with this Title V permit. Upon request, the permittee shall also furnish to the SMAQMD Air Pollution Control Officer copies of records required to be kept by conditions of this permit or, for information claimed to be confidential, the permittee may furnish such records directly to the U.S. EPA along with a claim of confidentiality.
[SMAQMD Rule 207 Section 305.1(k)(4)]

14. Noncompliance with any federally enforceable requirement in this Title V permit is grounds for Title V permit termination, revocation and reissuance, modification, enforcement action, or denial of the Title V permit renewal application. Any violation of the Title V permit shall also be a violation of SMAQMD Rule 207.
[SMAQMD Rule 207 Section 305.1(k)(5)]

15. A pending Title V permit action (e.g. a proposed permit revision) or notification of anticipated noncompliance does not stay any permit condition.
[SMAQMD Rule 207 Section 305.1(k)(6)]

FEDERALLY ENFORCEABLE GENERAL REQUIREMENTS

16. This Title V permit does not convey any property rights of any sort, or any exclusive privilege. **[SMAQMD Rule 207 Section 305.1(k)(7)]**

17. Upon presentation of credentials and other documents as may be required by law, the permittee shall allow the SMAQMD Air Pollution Control Officer or an authorized representative to perform all of the following:

    A. Enter upon the stationary source's premises where this source is located or emissions related activity is conducted, or where records must be kept under the conditions of this permit;

    B. Have access to and copy, at reasonable times, any records that must be kept under the conditions of this Title V permit;

    C. Inspect at reasonable times, the stationary source, equipment (including monitoring and air pollution control equipment), practices and operations regulated or required under this Title V permit, and;

    D. As authorized by the Federal Clean Air Act, sample or monitor at reasonable times substances or parameters for the purpose of assuring compliance with the Title V permit conditions or applicable federal requirements.

    [SMAQMD Rule 207 Section 413.1]

REPORTS AND RECORDKEEPING

18. **Monitoring Reports**

    A. The permittee shall submit to the SMAQMD Air Pollution Control Officer at least once every six months, unless required more frequently by an applicable requirement, reports of all required monitoring.
        i. All instances of deviations from Title V permit monitoring conditions must be clearly identified in such reports.

    B. The reporting periods for this permit shall be January 01 through June 30 and July 01 through December 31. The reports shall be submitted by July 30 and February 28 following each reporting period respectively.

    C. All required reports must be certified by the responsible official and shall state that, based on information and belief formed after reasonable inquiry, the statements and information in the document are true, accurate and complete.

    [SMAQMD Rule 207 Section 501.1]

19. **Compliance Reports**

    A. The permittee shall submit to the SMAQMD Air Pollution Control Officer and U.S. EPA (Air-3, U.S. EPA, Region IX) on an annual basis, unless required more frequently by additional

applicable federal requirements such as Section 114(a)(3) and 504(b) (42 U.S.C. Sections 7414(a)(3) and 7661c(b)) of the Federal Clean Air Act, a certification of compliance by the responsible official with all terms and conditions contained in the Title V permit, including emission limitations, standards and work practices.

B. The reporting period for this permit shall be January 01 through December 31. The report shall be submitted by February 28 following the reporting period.

C. All required reports must be certified by the responsible official and shall state that, based on information and belief formed after reasonable inquiry, the statements and information in the document are true, accurate and complete.

D. The Compliance Certification Report shall include the following:
   i. The identification of each term or condition of the Title V permit that is the basis of the certification;
   ii. The method(s) used for determining the compliance status of the source, currently and over the reporting period, and whether such method(s) provides continuous or intermittent data;
   iii. The status of compliance with the terms and conditions of the Title V permit for the period covered by the certification, based on the method designated in Section D.ii of this condition;
   iv. Such other facts as the SMAQMD Air Pollution Control Officer may require to determine the compliance status of the source; and
   v. In accordance with SMAQMD Rule 207 Section 305, a method for monitoring the compliance of the stationary source with its emissions limitations, standards and work practices.

[SMAQMD Rule 207 Section 413.4]

20. **Startup, Shutdown and Malfunction (SSM) Periodic and Immediate Reports**

A. Periodic Reports
   i. If actions taken during a SSM event are consistent with the procedures specified in the SSM Plan the permittee shall state such information in a SSM Report.
   ii. The SSM Report shall be submitted by February 28 and July 30 of each year but is only required if a SSM event occurred during the reporting period January 01 - June 30 and July 01 - December 31 of each year.
   iii. The SSM Report shall contain:
      a. Number, duration and a brief description of each SSM event.
      b. A letter containing the name, title and signature of the responsible official who is certifying the accuracy of the report.

[40 CFR 63.1955(b), 40 CFR 63.1980(b), 40 CFR 63.10(d)(5)(i)]

B. Immediate Reports
   i. If actions taken during a SSM event are not consistent with the procedures specified in the SSM Plan the permittee shall:
      a. Report to the SMAQMD Air Pollution Control Officer, by telephone call or facsimile (fax), within 2 working days after commencing actions inconsistent with the SSM

FEDERALLY ENFORCEABLE GENERAL REQUIREMENTS

Plan.

b. Follow with a letter to the SMAQMD Air Pollution Control Officer within 7 working days after the end of the SSM event that:
   (i) Contains the name, title and signature of the responsible official who is certifying the accuracy of the report.
   (ii) Explains the circumstances of the event.
   (iii) Explains the reasons for not following the SSM Plan
   (iv) Explains whether any excess emissions and/or parameter monitoring exceedances are believed to have occurred.

[40 CFR 63.1955(b), 40 CFR 63.1980(b) and 40 CFR 63.10(d)(5)(ii)]

21. The permittee shall maintain files of all required information (including all reports and notifications) recorded in a form suitable and readily available for expeditious inspection and review. The files shall be retained for at least 5 years following the date of each occurrence, measurement, maintenance, corrective action, report or record. At a minimum, the most recent 2 years of data shall be retained on site. The remaining 3 years of data may be retained off site. Such files may be maintained on microfilm, on a computer, on computer floppy disks, on magnetic tape disks or on microfiche.
[40 CFR 63.1955(b), 40 CFR 63.1980(b) and 40 CFR 63.10(d)(5)(ii)]

Frequency	Information to be recorded
At all times	A. The occurrence and duration of each startup, shutdown or malfunction of operation (i.e., process equipment). B. The occurrence and duration of each malfunction of the required air pollution control and monitoring equipment. C. All required maintenance performed on the air pollution control and monitoring equipment. D. Actions taken during periods of startup, shutdown and malfunction (including corrective actions to restore malfunctioning process and air pollution control and monitoring equipment to its normal or usual manner of operation) when such actions are different from the procedures specified in the affected source's Startup, Shutdown and Malfunction Plan. E. All information necessary to demonstrate conformance with the affected source's Startup, Shutdown and Malfunction Plan when all actions taken during periods of startup, shutdown and malfunction (including corrective actions to restore malfunctioning process and air pollution control and monitoring equipment to its normal or usual manner of operation) are consistent with the procedures specified in such plan. (The information needed to demonstrate conformance with the Startup, Shutdown and Malfunction Plan may be recorded using a "checklist" or some other effective form of recordkeeping, in order to minimize the recordkeeping

FEDERALLY ENFORCEABLE GENERAL REQUIREMENTS

Frequency	Information to be recorded
	burden for conforming events)

22. The permittee shall report within 24 hours of detection any deviation from a federally enforceable Title V permit condition not attributable to an emergency. In order to fulfill the reporting requirement of this condition, the permittee shall notify the SMAQMD Air Pollution Control Officer by telephone followed by a written statement describing the nature of the deviation from the federally enforceable permit condition.
[SMAQMD Rule 207 Section 501.3]

23. All monitoring data and support information required by a federally enforceable applicable requirement must be kept by the stationary source for a period of 5 years from the date of the monitoring sample, measurement, report or application. Support information includes all calibration and maintenance records and all original strip-chart recordings for continuous monitoring instrumentation, and copies of all reports required by the federally enforceable applicable requirement in the Title V permit.
[SMAQMD Rule 207 Section 502.3]

RINGELMANN CHART

24. Except as otherwise provided in SMAQMD Rule 401 Section 100, a person shall not discharge into the atmosphere from any single source of emission whatsoever any air contaminant, other than uncombined water vapor, for a period or periods aggregating more than three minutes in any one hour which is:

    A. As dark or darker in shade as that designated No. 1 on the Ringelmann Chart, as published by the United States Bureau of Mines, or

    B. Of such opacity as to obscure a human observer's view, or a certified calibrated in-stack opacity monitoring system to a degree equal to or greater than No. 1 on the Ringelmann Chart.

    [SMAQMD Rule 401 Section 301]

PARTICULATE MATTER

25. A person shall take every reasonable precaution not to cause or allow the emissions of fugitive dust from being airborne beyond the property line from which the emission originates, from any construction, handling or storage activity, or any wrecking, excavation, grading, clearing of land or solid waste disposal operation. Reasonable precautions shall include, but are not limited to:

    A. Use, where possible, of water or chemicals for control of dust in the demolition of existing buildings or structures, construction operations, the construction of roadways or the clearing of land.

    B. Application of asphalt, oil, water, or suitable chemicals on dirt roads, materials stockpiles

FEDERALLY ENFORCEABLE GENERAL REQUIREMENTS

and other surfaces which can give rise to airborne dusts;

C. Other means approved by the SMAQMD Air Pollution Control Officer.
[SMAQMD Rule 403 Section 301]

26. Except as otherwise provided in Condition No. 27, a person shall not discharge into the atmosphere from any source particulate matter in excess of 0.23 grams per dry standard cubic meter (0.1 grains per dry standard cubic foot).
[SMAQMD Rule 404 Section 301]

27. A person shall not discharge into the atmosphere particulate matter from the burning of any kind of material containing carbon in a free or combined state, from any single source of emission whatsoever, combustion contaminants in any state or combination thereof exceeding in concentration at the point of discharge: 0.23 grams per dry standard cubic meter (0.1 grains per dry standard cubic foot) of gas calculated to 12% carbon dioxide (CO2) at standard conditions.
[SMAQMD Rule 406 Section 302]

SULFUR COMPOUNDS

28. A person shall not discharge into the atmosphere from any single source of emission whatsoever sulfur compounds in any state or combination thereof exceeding in concentration at the point of discharge: sulfur compounds, calculated as sulfur dioxide (SO2): 0.2% by volume.
[SMAQMD Rule 406 Section 301]

29. Except as otherwise provided in SMAQMD Rule 420 Section 110, a person shall not burn any gaseous fuel containing sulfur compounds in excess of 1.14 grams per cubic meter (50 grains per 100 cubic feet) of gaseous fuel, calculated as hydrogen sulfide at standard conditions, or any liquid fuel or solid fuel having a sulfur content in excess of 0.5% by weight.
[SMAQMD Rule 420 Section 301]

ARCHITECTURAL COATING

30. Any coating applied to stationary structures and their appurtenances, to mobile homes, to pavements, or to curbs, shall meet the requirements of SMAQMD Rule 442.
[SMAQMD Rule 442]

31. All VOC-containing materials shall be stored in closed containers when not in use. In use includes, but is not limited to: being accessed, filled, emptied, maintained or repaired.
[SMAQMD Rule 442 Section 304]

32. A person shall not use volatile organic compounds for the cleanup of spray equipment unless equipment for collection of the cleaning compounds and minimizing its evaporation to the atmosphere is used.
[SMAQMD Rule 442 Section 305]

FEDERALLY ENFORCEABLE GENERAL REQUIREMENTS

33. The permittee shall keep a record of all architectural coatings purchased that are not clearly labeled as complying with the VOC content limits contained in SMAQMD Rule 442. Compliance in these cases can be determined by maintaining records of the manufacturer's certifications or by Material Safety Data Sheets (MSDS) that demonstrate compliance with the VOC limits of SMAQMD Rule 442.
[SMAQMD Rule 442 and SMAQMD Rule 207 Section 305]

COMPLIANCE

34. Compliance with the conditions of the Title V permit shall be deemed compliance with all applicable requirements identified in the Title V permit.
[SMAQMD Rule 207 Section 307]

EQUIPMENT BREAKDOWNS

35. An emergency constitutes an affirmative defense to an action brought for noncompliance with such technology based emission limitations if the following conditions are met:

    A. The affirmative defense of an emergency shall be demonstrated through properly signed, contemporaneous operating logs, or other relevant evidence that:
        i. An emergency occurred and that the permittee can identify the cause(s) of the emergency;
        ii. The permitted facility was at the time being properly operated;
        iii. During the period of the emergency the permittee took all reasonable steps to minimize levels of emissions that exceeded the emission standards, or other requirements in the Title V permit;
        iv The permittee submitted notice of the emergency to the SMAQMD Air Pollution Control Officer within two working days of the time when emissions limitations were exceeded due to the emergency. The notice must contain a description of the emergency, and corrective actions taken.

    B. In any enforcement proceedings, the permittee seeking to establish the occurrence of an emergency has the burden of proof.
[SMAQMD Rule 207 Section 414]

36. The permittee shall notify the SMAQMD Air Pollution Control Officer of any occurrence which constitutes an emergency as defined in SMAQMD Rule 207 Section 212 as soon as reasonably possible, but no later than one hour after its detection. If the emergency occurs when the SMAQMD Air Pollution Control Officer cannot be contacted, their report of the emergency shall be made at the commencement of the next regular working day. The notification shall identify the time, specific location, equipment involved and to the extent known the cause(s) of the occurrence.
[SMAQMD Rule 207 Section 501.2]

FEDERALLY ENFORCEABLE GENERAL REQUIREMENTS

TITLE VI REQUIREMENTS (OZONE DEPLETING SUBSTANCES)

37. Persons opening appliances containing CFCs for maintenance, service, repair, or disposal must comply with the required practices pursuant to 40 CFR 82.156.
[40 CFR 82 Subpart F]

38. Equipment used during the maintenance, service, repair, or disposal of appliances containing CFCs must comply with the standards for recycling and recovery equipment pursuant to 40 CFR 82.158.
[40 CFR 82 Subpart F]

39. Persons performing maintenance, service, repair or disposal of appliances containing CFCs must be certified by an approved technician certification program pursuant to 40 CFR 82.161.
[40 CFR 82 Subpart F]

PAYMENT OF FEES

40. The fee for (1) the issuance of an initial Title V operating permit, (2) the renewal and/or inspection of a Title V operating permit, (3) the modification of a Title V operating permit or (4) an administrative Title V permit amendment shall be based on the actual hours spent by the SMAQMD staff in evaluating the application and processing the operating permit. The fee shall be assessed in accordance with the hourly rate established in SMAQMD Rule 301 Section 308.12.
[SMAQMD Rule 207 Section 305.7 and SMAQMD Rule 301 Section 313]

41. After the provisions for granting permits as set forth in SMAQMD Rule 207 have been complied with, the permittee will be notified by mail of the fee due and payable and the date the fee is due. If the fee is not paid by the specified due date, the fee shall be increased by one half the amount and the applicant/permittee shall be notified by mail of the increased fee. If the increased fee is not paid within 30 days after notice the application/permit will be canceled/revoked and the applicant/permittee will be notified by mail.
[SMAQMD Rule 207 Section 305.7]

ACCIDENTAL RELEASES

42. If subject to Section 112(r) of the federal Clean Air Act of 1990 and 40 CFR 68, the permittee shall register and submit to the EPA the required data related to the risk management plan (RMP) for reducing the probability of accidental releases of any regulated substances listed pursuant to Section 112(r)(3) of the CAA as amended in 40 CFR 68.130. The list of substances, threshold quantities and accident prevention regulations promulgated under 40 CFR Part 68 do not limit in any way the general duty provisions under Section 112(r)(1) of the federal Clean Air Act of 1990.
[40 CFR 68]

FEDERALLY ENFORCEABLE GENERAL REQUIREMENTS

43. If subject to Section 112(r) of the federal Clean Air Act of 1990 and 40 CFR 68, the permittee shall comply with the requirements of 40 CFR Part 68 no later than the latest of the following dates as provided in 68.10(a):

    A. June 21, 1999,

    B. Three years after the date on which a regulated substance is first listed under 68.130, or

    C. The date on which a regulated substance is first present above a threshold quantity in a process.

    [40 CFR 68]

44. If subject to Section 112(r) of the federal Clean Air Act of 1990 and 40 CFR 68, the permittee shall submit any additional relevant information requested by any regulatory agency necessary to ensure compliance with the requirements of 40 CFR Part 68.
    [40 CFR 68]

45. If subject to Section 112(r) of the federal Clean Air Act of 1990 and 40 CFR 68, the permittee shall annually certify compliance with all applicable requirements of Section 112(r) of the federal Clean Air Act of 1990 as part of the annual compliance certification as required by SMAQMD Rule 207 Section 413.4.
    [40 CFR 68]

STARTUP, SHUTDOWN AND MALFUNCTION PLAN

46. The permittee shall develop and implement a written Startup, Shutdown and Malfunction (SSM) Plan as specified in 40 CFR 63.6(e)
    [40 CFR 63.1960]

LOCAL (NON-FEDERALLY ENFORCEABLE) GENERAL REQUIREMENTS

APPLICABILITY:

1. The requirements outlined in this section pertain to the SMAQMD Rule 201 Permit to Operate and are not part of the Title V permit.

LOCAL PERMIT RENEWAL:

2. Permits to Operate issued to 28th Street Landfill, pursuant to SMAQMD Rule 201 (non-Title V permits to operate), shall be renewed annually on September 1 and upon payment of the permit renewal fee established pursuant to SMAQMD Rule 301.

3. The SMAQMD Air Pollution Control Officer shall review every Permit to Operate upon annual renewal, pursuant to California Health and Safety Code Section 42301(c), to determine that permit conditions are adequate to ensure compliance with, and the enforceability of, SMAQMD rules and regulations applicable to the article, machine, equipment or contrivance for which the permit was issued. Applicable SMAQMD rules and regulations shall include those which were in effect at the time the permit was issued or modified, or which have subsequently been adopted and made retroactively applicable to an existing article, machine, equipment or contrivance, by the SMAQMD Board of Directors. The SMAQMD Air Pollution Control Officer shall revise the conditions, if such conditions are not consistent, in accordance with all applicable rules and regulations.

GENERAL

4. The SMAQMD Air Pollution Control Officer and/or authorized representatives, upon the presentation of credentials shall be permitted:

   A. To enter upon the premises where the source is located or in which any records are required to be kept under the terms and conditions of this permit to operate, and

   B. At reasonable times to have access to and copy any records required to be kept under the terms and conditions of this Permit to Operate, and

   C. To inspect any equipment, operation, or method required in this Permit to Operate, and

   D. To sample emissions from the source or require samples to be taken.

5. Legible copies of all SMAQMD local permits shall be maintained on the premises with the equipment.

EQUIPMENT OPERATION:

6. The equipment shall be properly maintained.

7. This permit does not authorize the emission of air contaminants in excess of those allowed by Division 26, Part 4, Chapter 3, of the Health and Safety Codes of the State of California or the

LOCAL (NON-FEDERALLY ENFORCEABLE) GENERAL REQUIREMENTS

Rules and Regulations of the Sacramento Metropolitan Air Quality Management District.

EQUIPMENT BREAKDOWNS:

8. The permittee shall notify the SMAQMD Air Pollution Control Officer of any occurrence which constitutes a breakdown as defined in SMAQMD Rule 602 Section 201 as soon as reasonably possible, but no later than one hour after its detection. If the breakdown occurs when the SMAQMD Air Pollution Control Officer cannot be contacted, the report of breakdown shall be made at the commencement of the next regular working day. The notification shall identify the time, specific location, equipment involved, and to the extent known the cause(s) of the occurrence.

9. Upon notification of the breakdown condition, the SMAQMD Air Pollution Control Officer shall investigate the breakdown condition in accordance with uniform written procedures and guidelines relating to logging of initial reports on appropriate forms, investigation, and enforcement follow-up. If the occurrence does not constitute a breakdown condition, the SMAQMD Air Pollution Control Officer may take appropriate enforcement action.

10. An occurrence which constitutes a breakdown condition, and which persists only until the end of the production run or 24 hours, whichever is sooner (except for continuous air pollution monitoring equipment, for which the period shall be 96 hours) shall constitute a violation of any applicable emission limitation or restriction prescribed by SMAQMD Rules and Regulations; however, the SMAQMD Air Pollution Control Officer may elect to take no enforcement action if the owner or operator demonstrates to his satisfaction that a breakdown condition exists and the following requirements are met:

    A. The notification required in SMAQMD Rule 602 Section 301.1 is made; and

    B. Immediate appropriate corrective measures are undertaken and compliance is achieved, or the process is shutdown for corrective measures before commencement of the next production run or within 24 hours, whichever is sooner (except for continuous air pollution monitoring equipment for which the period shall be 96 hours). If the owner or operator elects to shut down rather than come into immediate compliance, (s)he must nonetheless take whatever steps are possible to minimize the impact of the breakdown within the 24 hour period; and

    C. The breakdown does not interfere with the attainment and maintenance of any national ambient air quality standard.

11. An occurrence which constitutes a breakdown condition shall not persist longer than the end of the production run or 24 hours, whichever is sooner (except for continuous air pollution monitoring equipment, for which the period shall be 96 hours), unless an emergency variance has been obtained.

12. If the breakdown condition will either require more than 24 hours to correct or persists longer than the end of the production run (except for continuous air pollution monitoring equipment, for which the period shall be 96 hours) the owner or operator may, in lieu of shutdown, request the

LOCAL (NON-FEDERALLY ENFORCEABLE) GENERAL REQUIREMENTS

SMAQMD Air Pollution Control Officer to commence the emergency variance procedure set forth in SMAQMD Rule 602 Section 304.

13. No emergency variance shall be granted unless the chairperson of the SMAQMD Hearing Board or other designated member(s) of the SMAQMD Hearing Board finds that:

    A. The occurrence constitutes a breakdown condition;

    B. Continued operation is not likely to create an immediate threat or hazard to public health or safety; and

    C. The requirements for a variance set forth in California Health & Safety Code Sections 42352 and 42353 have been met;

    D. The continued operation in a breakdown condition will not interfere with the attainment or maintenance of the national ambient air quality standards.

14. At any time after an emergency variance has been granted, the SMAQMD Air Pollution Control Officer may request for good cause that the SMAQMD Hearing Board chairperson or designated member(s) reconsider and revoke, modify or further condition the variance. The procedures set forth in SMAQMD Rule 602 Section 304.1 shall govern any further proceedings conducted under this section.

15. An emergency variance shall remain in effect only for as long as necessary to repair or remedy the breakdown condition, but in no event after a properly noticed hearing to consider an interim or 90 day variance has been held, or 15 days from the date of the subject occurrence, whichever is sooner.

16. Within one week after a breakdown condition has been corrected, the owner or operator shall submit a written report to the SMAQMD Air Pollution Control Officer on forms supplied by the SMAQMD Air Pollution Control Officer describing the causes of the breakdown, corrective measures taken, estimated emissions during the breakdown and a statement that the condition has been corrected, together with the date of correction and proof of compliance. The SMAQMD Air Pollution Control Officer may, at the request of the owner or operator for good cause, extend up to 30 days the deadline for submittal of the report described in this subsection.

17. The burden of proof shall be on the owner or operator of the source to provide sufficient information to demonstrate that a breakdown condition did occur. If the owner or operator fails to provide sufficient information, the SMAQMD Air Pollution Control Officer shall undertake appropriate enforcement action.

18. Any failure to comply, or comply in a timely manner, with the reporting requirements established in SMAQMD Rule 602 Sections 301.1 and 401 shall constitute a separate violation of SMAQMD Rule 602.

LOCAL (NON-FEDERALLY ENFORCEABLE) GENERAL REQUIREMENTS

19. It shall constitute a separate violation of SMAQMD Rule 602 for any person to file with the SMAQMD Air Pollution Control Officer a report which falsely, or without probable cause, claims that an occurrence is a breakdown condition.

EQUIPMENT SPECIFIC REQUIREMENTS – LANDFILL AND LANDFILL GAS COLLECTION SYSTEM

A. EQUIPMENT DESCRIPTION: The information specified under this section is enforceable by the SMAQMD, U.S. EPA and the public.

The requirements specified under the following sections apply to the following equipment:

Landfill and Landfill Gas Collection System
P/O No. 12762(Rev01) (number is for reference purposes only - not federally enforceable)

1. Landfill area designated as WMU-A and WMU-B
2. Perimeter wells
3. Interior wells
4. Piping to collect landfill gas from perimeter/interior wells and direct it to the flares
5. Blowers to move landfill gas to the flares

B. EQUIPMENT SPECIFIC FEDERALLY ENFORCEABLE REQUIREMENTS: The requirements specified under this section are enforceable by the SMAQMD, U.S. EPA and the public.

EMISSION LIMITATION REQUIREMENTS

1. The landfill gas collection system shall operate such that the methane concentration is less than 500 parts per million above background at the surface of the landfill.
[40 CFR 60.753(d) and SMAQMD Permit to Operate No. 12762(Rev01)]

2. The fugitive emissions from the landfill shall not exceed the following level:
[SMAQMD Permit to Operate No. 12762(Rev01)]

Pollutant	Maximum Allowable Emissions (A) lb/quarter
ROC	1,601

(A) Emissions are based on the following assumptions:
1. The landfill gas collection system captures 85% of the generated landfill gas. This results in 353 scfm of landfill gas released as a fugitive emission.
2. The landfill gas contains an average NMOC concentration of 822 ppm (as methane).
3. The collection system operates 24 hours/day and 92 days/quarter.
4. As a conservative assumption, all NMOC is treated as ROC. The City of Sacramento may speciate NMOC to account for and exclude exempt (non-ROC) compounds when determining compliance with this condition.

EQUIPMENT OPERATION REQUIREMENTS

3. The maximum design capacity of the 28th Street Landfill shall not exceed 6.514 million cubic yards.
[SMAQMD Permit to Operate No. 12762(Rev01)]

EQUIPMENT SPECIFIC REQUIREMENTS – LANDFILL AND LANDFILL GAS COLLECTION SYSTEM

4. The landfill gas collection system shall be designed to handle the maximum expected gas flow rate from the landfill over the intended use period of the landfill gas control system.
[40 CFR 60.752(b)(2)(ii)(A)(*1*) and SMAQMD Permit to Operate No. 12762(Rev01)]

5. Landfill gas shall be collected from each area, cell or group of cells in the landfill in which the initial solid waste has been placed for a period of 5 years or more.
[40 CFR 60.753(a) and SMAQMD Permit to Operate No. 12762(Rev01)]

6. Landfill gas shall be collected at a sufficient extraction rate.
[40 CFR 60.752(b)(2)(ii)(A)(*3*) and SMAQMD Permit to Operate No. 12762(Rev01)]

7. The landfill gas collection system shall be designed to minimize off-site migration of subsurface landfill gas.
[40 CFR 60.752(b)(2)(ii)(A)(*4*) and SMAQMD Permit to Operate No. 12762(Rev01)]

8. The landfill gas collection system shall operate such that all collected gases are vented to the flares or delivered to Blue Diamond Almond Growers. In the event the collection or control system is inoperable, the gas mover system shall be shut down and all valves in the collection and control system contributing to venting of the gas to the atmosphere shall be closed within 1 hour.
[40 CFR 60.753(e) and SMAQMD Permit to Operate No. 12762(Rev01)]

9. A sampling port and a temperature measuring device or an access port for temperature measurements shall be installed at each landfill gas wellhead.
[40 CFR 60.756(a)]

10. The landfill gas collection system shall operate such that each landfill gas wellhead exhibits negative pressure except under the following conditions:

    A. A fire or increased well temperature. The owner or operator shall record instances when positive pressure occurs in efforts to avoid a fire.

    B. Use of a geomembrane or synthetic cover.

    C. A decommissioned well.

    D. The well is not placed in refuse (gas migration control well).
    [SMAQMD Permit to Operate No. 12762(Rev01)]

    E. A well is temporarily shut-off or disconnected to prevent a fire.
    [SMAQMD Permit to Operate No. 12762(Rev01)]

    [40 CFR 60.753(b) and SMAQMD Permit to Operate No. 12762(Rev01)]

EQUIPMENT SPECIFIC REQUIREMENTS – LANDFILL AND LANDFILL GAS COLLECTION SYSTEM

11. A. The landfill gas collection system shall operate such that each interior landfill gas wellhead achieves the following:
    i. A landfill gas temperature less than 55°C and
    ii. Either a nitrogen level less than 20 percent or an oxygen level less than 5 percent. The owner or operator shall decide whether to monitor oxygen or nitrogen at each well.

    B. The owner or operator may establish a higher operating temperature, nitrogen or oxygen value at a particular well. A higher operating value demonstration shall show supporting data that the elevated parameter does not cause fires or significantly inhibit anaerobic decomposition by killing methanogens.

    [40 CFR 60.753(c) and SMAQMD Permit to Operate No. 12762(Rev01)]

MONITORING AND CORRECTIVE ACTION REQUIREMENTS

12. A device shall be installed that records flow to or bypass of the flares. The owner or operator shall either:

    A. Install, calibrate and maintain a landfill gas flow rate measuring device that shall record the flow to the flares at least every 15 minutes; or

    B. Secure the bypass line valve in the closed position with a car-seal or a lock-and-key type configuration.

    [40 CFR 60.756(b)(2) and SMAQMD Permit to Operate No. 12762(Rev01)]

13. If applicable, a visual inspection of the seal or closure mechanism on the landfill gas bypass valve for the flares shall be conducted at least once every month to ensure that the valve is maintained in the closed position and that the landfill gas flow is not diverted through the bypass line.

    [40 CFR 60.756(b)(2)(ii) and SMAQMD Permit to Operate No. 12762(Rev01)]

14. Gauge pressure shall be measured monthly in the landfill gas collection header at each individual wellhead.

    A. If a positive pressure exists, action shall be initiated to correct the exceedance within 5 calendar days, except for the conditions allowed under Condition No. 10. If negative pressure cannot be achieved without excess air infiltration within 15 calendar days of the first measurement, the gas collection system shall be expanded to correct the exceedance within 120 days of the initial measurement of positive pressure.

    B. Any attempted corrective measure shall not cause exceedances of other operational or performance standards.

    [40 CFR 60.755(a)(3) and 40 CFR 60.756(a)(1) and SMAQMD Permit to Operate No. 12762(Rev01)]

EQUIPMENT SPECIFIC REQUIREMENTS – LANDFILL AND LANDFILL GAS COLLECTION SYSTEM

15. Temperature and either the nitrogen level (%) or the oxygen level (%) shall be measured monthly for each interior well.

    A. The nitrogen level shall be determined using U.S. EPA Method 3C unless an alternative method is established as allowed by 40 CFR 60.752(b)(2)(i).

    B The oxygen level shall be determined using U.S. EPA Method 3A or 3C unless an alternative method is established as allowed by 40 CFR 60.752(b)(2)(i).

    C. If a well exceeds the operating parameters stated in Condition No. 11, action shall be initiated to correct the exceedance within 5 calendar days. If correction of the exceedance cannot be achieved within 15 calendar days of the first measurement, the gas collection system shall be expanded to correct the exceedance within 120 days of the initial exceedance.

    D. Any attempted corrective measure shall not cause exceedances of other operation or performance standards.

    [40 CFR 60.753(c)(1), 40 CFR 60.753(c)(2), 40 CFR 60.755(a)(5), 40 CFR 60.756(a)(2) and 40 CFR 60.756(a)(3) and SMAQMD Permit to Operate No. 12762(Rev01)]

16. Surface concentrations of methane shall be measured quarterly along the entire perimeter of the collection area, along a pattern that traverses the landfill at 30 meter intervals (or a site-specific established spacing) and where visual observations indicate elevated concentrations of landfill gas, such as distressed vegetation and cracks or seeps in the cover. The owner or operator may establish an alternative traversing pattern that ensures equivalent coverage. A surface monitoring design plan shall be developed that includes a topographical map with the monitoring route and the rationale for any site specific deviations from the 30 meter intervals. Areas with steep slopes or other dangerous areas may be excluded from the surface testing.

    Any closed landfill that has no monitored exceedances of the operational standard in three consecutive quarterly monitoring periods may skip to annual monitoring. Any methane reading of 500 ppm or more above background detected during the annual monitoring returns the frequency to quarterly monitoring.
    [40 CFR 60.756(f) and SMAQMD Permit to Operate No. 12762(Rev01)]

    A. Each area shall be monitored using an organic vapor analyzer, flame ionization detector, or other portable monitor.

    B. The organic vapor analyzer, flame ionization detector or other portable monitor shall meet the following specifications:
        i. The portable analyzer shall meet the instrument specifications provided in Section 3 of U.S. EPA Method 21, except that "methane" shall replace all references to VOC.
        ii. The calibration gas shall be methane, diluted to a nominal concentration of 500 parts per million in air.

EQUIPMENT SPECIFIC REQUIREMENTS – LANDFILL AND LANDFILL GAS COLLECTION SYSTEM

iii. To meet the performance evaluation requirements in Section 3.1.3 of U.S. EPA Method 21, the instrument evaluation procedures of Section 4.4 of U.S. EPA Method 21 shall be used.
iv. The calibration procedures provided in Section 4.2 of U.S. EPA Method 21 shall be followed immediately before commencing a surface monitoring survey.

C. The background concentration shall be determined by moving the probe inlet upwind and downwind outside the boundary of the landfill at a distance of at least 30 meters from the perimeter wells.

D. Surface emission monitoring shall be performed in accordance with Section 4.3.1 of U.S. EPA Method 21, except that the probe inlet shall be placed within 5 to 10 centimeters of the ground. Monitoring shall be performed during typical meteorological conditions.

E. Any reading of 500 parts per million or more of methane above background at any location shall be recorded as a monitored exceedance and the following actions shall be taken. As long as the specified actions listed in paragraphs (i) through (v) are taken, the exceedance is not a violation of Condition No. 1.
   i. The location of each monitored exceedance shall be marked and the location recorded.
   ii. Cover maintenance or adjustments to the vacuum of the adjacent wells to increase the gas collection in the vicinity of each exceedance shall be made and the location shall be re-monitored within 10 calendar days of detecting the exceedance.
   iii. If the re-monitoring of the location shows a second exceedance, additional corrective action shall be taken and the location shall be monitored again within 10 days of the second exceedance. If the re-monitoring shows a third exceedance for the same location, the action specified in Paragraph 5 below shall be taken, and no further monitoring of that location is required until the action specified in Paragraph v. below has been taken.
   iv. Any location that initially showed an exceedance but has a methane concentration less than 500 ppm methane above background at the 10-day re-monitoring specified in Paragraph i. or iii. above shall be re-monitored 1 month from the initial exceedance. If the 1-month remonitoring shows a concentration less than 500 parts per million above background, no further monitoring of that location is required until the next quarterly monitoring period. If the 1-month remonitoring shows an exceedance, the actions specified in Paragraph iii. above or v. below shall be taken.
   v. For any location where monitored methane concentration equals or exceeds 500 parts per million above background three times within a quarterly period, a new well or other collection device shall be installed within 120 calendar days of the initial exceedance. An alternative remedy to the exceedance, such as upgrading the blower, header pipes or control device and a corresponding timeline for installation may be submitted to the SMAQMD Air Pollution Control Officer for approval.

[40 CFR 60.753(d) and 40 CFR 60.755(c) and SMAQMD Permit to Operate No. 12762(Rev01)]

EQUIPMENT SPECIFIC REQUIREMENTS – LANDFILL AND LANDFILL GAS COLLECTION SYSTEM

17. A program shall be implemented to monitor for cover integrity and implement cover repairs as necessary on a monthly basis.
[40 CFR 60.755(c)(5) and SMAQMD Permit to Operate No. 12762(Rev01)]

RECORDKEEPING AND REPORTING REQUIREMENTS

18. The following records shall be continuously maintained onsite for the most recent five year period and shall be made available to the SMAQMD Air Pollution Control Officer upon request. Monthly and quarterly records shall be made available within 30 days of the end of the reporting period .
[SMAQMD Permit to Operate No. 12762(Rev01)]

Frequency	Information to be recorded
At all times	A. The design capacity report which is the basis for this facility being subject to the provisions of 40 CFR 60.752(b), the current amount of solid waste in-place and the year-by-year waste acceptance rate. Off-site records may be maintained if they are retrievable within 4 hours. Either paper copy or electronic formats are acceptable. **[40 CFR 60.758(a)]** B. The maximum expected gas generation flow rate as calculated using the methodology in 40 CFR 60.755(a)(1). **[40 CFR 60.758(b)(1)(i)]** C. The density of wells, horizontal collectors, surface collectors or other gas extraction devices determined using the procedures in 40 CFR 60.759(a)(1). **[40 CFR 60.758(b)(1)(ii)]** D. Continuous record of either: i. The indication of landfill gas flow to the flares or the indication of landfill gas bypass flow, or ii. Monthly inspections of car-seals or lock-and-key configurations used to seal landfill gas bypass lines. **[40 CFR 60.758(c)(2)]** E. Record of all collection system exceedances of the following operational standards at each individual well: i. Landfill gas collection header gauge pressure - Condition No. 10 ii. Landfill gas temperature - Condition No. 11 iii. Either nitrogen or oxygen level - Condition No. 11 iv. Surface methane concentrations - Condition No. 1 Where there is an exceedance, the reading in the subsequent month shall be recorded and whether or not the second reading is an

EQUIPMENT SPECIFIC REQUIREMENTS – LANDFILL AND LANDFILL GAS COLLECTION SYSTEM

Frequency	Information to be recorded
	exceedance and the location of the exceedance. **[40 CFR 60.758(e)]** F. Plot map showing each existing and planned landfill gas collector in the system and providing a unique identification location label for each collector. **[40 CFR 60.758(d)]** G. Record of the installation date and location of all newly installed landfill gas collectors. **[40 CFR 60.758(d)(1)]** H. If applicable, documentation of the nature, date of deposition, amount and location of asbestos-containing or non-degradable waste excluded from collection as well as any non-productive areas excluded from collection. **[40 CFR 60.758(d)(2)]**
Monthly	I. Record of the following equipment operating parameters specified to be monitored at each individual well: i. Landfill gas collection header gauge pressure - Condition No. 14. ii Landfill gas temperature - Condition No. 15. iii. Either nitrogen or oxygen level - Condition No. 15. **[40 CFR 60.758(c)]** J. Record of monitoring for cover integrity and any cover repairs implemented. **[SMAQMD P/O 12762(Rev01)]**
Quarterly	K. If applicable, record of the following: i. Surface methane concentrations - Condition No. 16. **[40 CFR 60.758(c)]**
Yearly	L. If applicable, record of the following: i. Surface methane concentrations - Condition No. 16. **[40 CFR 60.758(c)]**

EQUIPMENT SPECIFIC REQUIREMENTS – LANDFILL AND LANDFILL GAS COLLECTION SYSTEM

19. A written report shall be submitted to the SMAQMD Air Pollution Control Officer by the date indicated and shall contain the following information.
[SMAQMD Permit to Operate No. 12762(Rev01)]

Frequency	Information to be submitted
Report by: July 30 of each year for the six month period: Jan. - June and February 28 of each year for the six month period: July - Dec. **[40 CFR 63.1980(a)]**	A. Value and length of time for exceedance of the following parameters at each individual well: i. Landfill gas collection header gauge pressure - Condition No. 10 (a) Identify instances when positive pressure occurs in efforts to avoid a fire. ii. Landfill gas temperature - Condition No. 11 iii. Either nitrogen or oxygen level - Condition No. 11 iv. Surface methane concentrations - Condition No. 1 **[40 CFR 60.757(f)(1)]** B. If applicable, description and duration of all periods when the landfill gas stream is diverted from the flares through a landfill gas bypass line or the indication of bypass flow as specified to be monitored in Condition No. 12. **[40 CFR 60.757(f)(2)]** C. If applicable, the results of visual inspection of the seal or closure mechanism on the landfill gas valve bypassing the flares, as specified to be monitored in Condition No. 13, to ensure that the valve is maintained in the closed position and that the landfill gas flow is not diverted through the bypass line. **[40 CFR 60.757(f)(2)]** D. All periods when the collection system was not operating in excess of 5 days. **[40 CFR 60.757(f)(4)]** E. The location of each exceedance of the 500 parts per million methane concentration limit pursuant to Condition No. 16 and the concentration recorded at each location for which an exceedance was recorded in the previous month. **[40 CFR 60.757(f)(5)]** F. The date of installation and the location of each well or collection system expansion added pursuant to Condition Nos. 15(C) and 16(E)(5). **[40 CFR 60.757(f)(6)]**

EQUIPMENT SPECIFIC REQUIREMENTS – LANDFILL AND LANDFILL GAS COLLECTION SYSTEM

Frequency	Information to be submitted
Within 30 days of the landfill closing and waste acceptance cessation	G. Each owner or operator of a controlled landfill shall submit a closure report within 30 days of waste acceptance cessation **[40 CFR 60.757(d)]** H. The SMAQMD Air Pollution Control Officer may request additional information as may be necessary to verify that permanent closure has taken place in accordance with 40 CFR 258.60. **[40 CFR 60.757(d)]** I. If a closure report has been submitted to the SMAQMD Air Pollution Control Officer, no additional wastes may be placed into the landfill without filing a notification of modification as described under 40 CFR 60.7(a)(4). **[40 CFR 60.757(d)]**
30 days prior to the removal or cessation of control equipment operation	J. Each owner or operator of a controlled landfill shall submit an equipment removal report 30 days prior to removal or cessation of operation of the control equipment. i. The equipment removal report shall contain all of the following items: (a) A copy of the closure report submitted in accordance with 40 CFR 60.757(d). (b) A copy of the initial performance test report demonstrating that the 15 year minimum control period has expired. (c) Dated copies of three successive NMOC emission rate reports demonstrating that the landfill is no longer producing 50 megagrams or greater of NMOC per year. ii. The SMAQMD Air Pollution Control Officer may request such additional information as may be necessary to verify that all of the conditions for removal in 40 CFR 60.752(b)(2)(v) have been met. **[40 CFR 60.757(e)]**

EQUIPMENT SPECIFIC REQUIREMENTS – APC LANDFILL GAS FLARE (1990)

A. EQUIPMENT DESCRIPTION: The information specified under this section is enforceable by the SMAQMD, U.S. EPA and the public.

The requirements specified under the following sections apply to the following equipment:

APC Landfill Gas Flare (1990)

P/O No.	9314(Rev01) (for reference purposes only - not federally enforceable)
Manufacturer:	John Zink
Model:	ZTOF
Type:	Enclosed
Heat Input:	41 MMBTU/hour at 455 BTU/cf
Capacity:	1,500 scfm

B. EQUIPMENT SPECIFIC FEDERALLY ENFORCEABLE REQUIREMENTS: The requirements specified under this subsection are enforceable by the SMAQMD, U.S. EPA and the public.

EMISSION LIMITATION REQUIREMENTS:

1. Emissions from the Landfill Gas Flare (1990) shall not exceed the following: **[SMAQMD P/O 9314(Rev01)]**

Pollutant	Maximum Allowable Emissions
ROC	A. 2% of inlet NMOC (equivalent to a 98% NMOC destruction efficiency) or 20 ppmvd at 3% O2 measured as hexane, and B. 0.01 lb/MMBTU (high heating value)
NOx (BACT)	0.0825 lb/MMBTU (high heating value)
CO (BACT)	0.50 lb/MMBTU (high heating value)

EQUIPMENT SPECIFIC REQUIREMENTS – APC LANDFILL GAS FLARE (1990)

2. Emissions from the Landfill Gas Flare (1990) shall not exceed the following:
[SMAQMD P/O 9314(Rev01)]

Pollutant	Emission Factor (A) lb/MMcf	Maximum Allowable Emissions (B)	
		lb/day	lb/quarter
ROC	4.7	10	920
NOx	37.5	81	7,544
SOx	3.43	7.4	682
PM10	32	69	6,348
CO	228	492	45,264

(A) Emission factors for NOx, CO and ROC are based on permit limits of 0.0825 lb/MMBTU, 0.50 lb/MMBTU and 0.01lb/MMBTU respectively and a heat content of 455 BTU/scf of landfill gas.
Emission factor for SOx is based on a sulfur content in the landfill gas of 1.3 grains per 100 cf as H2S and a destruction efficiency of 98%.
Emission factor for PM10 is based on an emission rate of 2.9 lb/hr.

(B) Emissions based on 1,500 scfm landfill gas combustion rate, 24 hours/day and 92 days/quarter.

EQUIPMENT OPERATION AND MONITORING REQUIREMENTS:

3. The amount of landfill gas combusted by the Landfill Gas Flare (1990) shall not exceed the following limit :
[SMAQMD P/O 9314(Rev01)]

Flare Identifier	Maximum Allowable Landfill Gas Combusted by Landfill Gas Flare (1990) (A) million cubic feet/quarter
Landfill Gas Flare (1990)	199

(A) Based on the flare operating at maximum capacity of 1500 scfm, 24 hours/day and 92 days/quarter.

4. The sulfur content of the landfill gas combusted in the Landfill Gas Flare (1990) shall not exceed 1.3 grains/100 scf as hydrogen sulfide (H2S).
[SMAQMD P/O 9314(Rev01)]

EQUIPMENT SPECIFIC REQUIREMENTS – APC LANDFILL GAS FLARE (1990)

5. A sampling port, or other method approved by the SMAQMD Air Pollution Control Officer, shall be installed at the inlet gas line to the Landfill Gas Flare (1990). The sampling port shall be located so that an accurate volume flow measurement can be performed. **[SMAQMD P/O 9314(Rev01)]**

6. The Landfill Gas Flare (1990) exhaust sample ports shall be permanent, accessible and located and constructed as per applicable U.S. EPA, CARB and U.S. OSHA requirements. **[SMAQMD P/O 9314(Rev01)]**

7. The Landfill Gas Flare (1990) shall be equipped with a temperature monitoring device.

   A. The thermocouple used to measure the flare temperature shall be located at a distance that is greater than the distance equivalent to 0.6 seconds at the maximum flow rate downstream of the burner.

   B. The temperature monitoring device shall be equipped with a continuous recorder.

   C. The temperature monitoring device shall have an accuracy of ±1 percent of the temperature being measured expressed in degrees Celsius or ±0.5 degrees C, whichever is greater.

   D. The temperature monitoring device is not precluded from expressing measurements in degrees Fahrenheit as long as the aforementioned accuracy is met.

   E. The owner or operator shall submit to the SMAQMD Air Pollution Control Officer for approval a description of the temperature monitoring device calibration procedure and schedule of calibration.

   [SMAQMD P/O 9314(Rev01)]

8. The Landfill Gas Flare (1990) shall operate at a minimum combustion zone temperature equal to the 3-hour average temperature (measured by the thermocouple specified in Condition No. 7) as determined during the most recent complying source test minus 28 degrees C (50 degrees F)
   [SMAQMD P/O 9314(Rev01)]

   (The data from the most recent source test is summarized in Attachment A indicating the 3-hour average temperature measured by the thermocouple in Condition No. 7.)

   A. The minimum combustion zone temperature shall not be in effect for a maximum of five days in each calendar year when emissions testing is being performed to determine if the required NMOC destruction efficiency or NMOC exhaust concentration can be met at a lower combustion zone temperature.

EQUIPMENT SPECIFIC REQUIREMENTS – APC LANDFILL GAS FLARE (1990)

RECORDKEEPING AND REPORTING REQUIREMENTS:

9. The following record shall be continuously maintained on site for the most recent 5 year period, except as noted, and shall be made available to the SMAQMD Air Pollution Control Officer upon request. Quarterly records shall be made available within 30 days of the end of the reporting period.
[SMAQMD P/O 9314(Rev01)]

Frequency	Information to be recorded
At all times	A. The following information measured during the initial performance test shall be maintained for the life of the Landfill Gas Flare (1990). Records of subsequent tests or monitoring shall be maintained for a minimum of 5 years. **[40 CFR 60.758(b)]** i. The average combustion temperature of Landfill Gas Flare (1990) measured at least every 15 minutes and averaged over the same time period as the performance test. **[40 CFR 60.758(b)(2)(i)]** ii. The percent reduction of NMOC, determined as specified in 40 CFR 60.752(b)(2)(iii)(B), achieved by the Landfill Gas Flare (1990). **[40 CFR 60.758(b)(2)(ii)]** B. All 3 hour periods of operation during which Landfill Gas Flare (1990) average combustion temperature was below the limit established in Condition No. 8. **[40 CFR 60.758(c)(1)(i)]** C. All deviations that occur in continuous parameter monitoring data: **[40 CFR 63.1960]** i. Deviation is defined as when 1 hour or more of the hours during the 3 hour block averaging period does not constitute a valid hour of data. **[40 CFR 63.1965(b)]** ii. A valid hour of data must have measured values for at least three 15 minute monitoring periods within the hour. **[40 CFR 63.1965(b)]** iii. Continuous parameter monitoring data collected during the following events are not to be included in any 3 hour block average: (a) Monitoring system breakdowns, repairs, calibration checks and zero (low level) and high level adjustments. (b) Startups. (c) Shutdowns. (d) Malfunctions **[40 CFR 63.1975(a) - (d)]**

EQUIPMENT SPECIFIC REQUIREMENTS – APC LANDFILL GAS FLARE (1990)

Frequency	Information to be recorded
	D. Record of calibration reports for the temperature monitoring device. **[SMAQMD P/O 9314(Rev01)]**
Quarterly	E. The combined amount of landfill gas consumed in Landfill Gas Flare (1990) and Landfill Gas Flare (1997). (cubic feet/quarter) **[SMAQMD P/O 9314(Rev01)]**

10. A written report shall be submitted to the SMAQMD Air Pollution Control Officer annually by the date indicated and shall contain the following information. **[SMAQMD P/O 9314(Rev01)]**

Frequency	Information to be submitted
Annually by: February 28 for the previous calendar year	A. All 3-hour periods of operation during which the average Landfill Gas Flare (1990) combustion temperature was more than 50 degrees F (28 degrees C) below the 3-hour average Landfill Gas Flare (1990) combustion temperature during the most recent performance test at which compliance with 40 CFR 60.752(b)(2)(iii) was determined. **[40 CFR 60.758(c)(1)(i)]** B. All deviations that occur in continuous parameter monitoring data. **[40 CFR 63.1960]** C. Description and duration of all periods when the Landfill Gas Flare (1990) was not operating for a period exceeding 1 hour and length of time Landfill Gas Flare (1990) was not operating. **[40 CFR 60.757(f)(3)]**

EMISSION TESTING REQUIREMENTS:

11. An emission test of the Landfill Gas Flare (1990) shall be conducted each calendar year to demonstrate compliance with Condition Nos. 1, 2, 4 and 8:

    A. Submit a source test plan to the SMAQMD Air Pollution Control Officer for approval at least 30 days before the source test is to be performed.

    B. Notify the SMAQMD Air Pollution Control Officer at least 7 days prior to the source test date.

    C. Submit the source test report to the SMAQMD Air Pollution Control Officer within 60 days from the completion of the source test.

EQUIPMENT SPECIFIC REQUIREMENTS – APC LANDFILL GAS FLARE (1990)

D. The source test shall be conducted at the inlet and the exhaust of Landfill Gas Flare (1990) and shall include a test for:
   i. Either
      (a) NMOC destruction efficiency, or
      (b) Total NMOC (ppmvd at 3% O2 measured as hexane, exhaust only)
   ii. Oxides of nitrogen (exhaust only)
   iii. Carbon monoxide (exhaust only)
   iv. Reactive Organic Compounds (ROC) (exhaust only)
   v. Hydrogen sulfide (inlet only)
   vi. Combustion zone temperature
   vii. Landfill gas flow rate

[SMAQMD P/O 9314(Rev01)]

EQUIPMENT SPECIFIC REQUIREMENTS – APC LANDFILL GAS FLARE (1990)

ATTACHMENT A

Actual Flare Combustion Temperature Observed
During the Most Recent Landfill Gas Flare (1990) Source Test

Date of Test	Actual 3-Hour Average Flare Combustion Temperature Observed During Source Test degrees F	Minimum 3-Hour Flare Combustion Temperature to Demonstrate Continuous Compliance degrees F
09-26-2006	1475	1425
Historical Data ↓		
09-21-2005	1450	1400
09-29-2004	1450	1400
11-21-2002	1400	1350
08-21-2000	1450	1400

EQUIPMENT SPECIFIC REQUIREMENTS – APC LANDFILL GAS FLARE (1997)

A. EQUIPMENT DESCRIPTION: The information specified under this section is enforceable by the SMAQMD, U.S. EPA and the public.

The requirements specified under the following sections apply to the following equipment:

APC Landfill Gas Flare (1997)

P/O No.	14749(Rev01) (for reference purposes only - not federally enforceable)
Manufacturer:	John Zink
Model:	ZTOF
Type:	Enclosed
Heat Input:	54.6 MMBTU/hour at 455 BTU/cf
Capacity:	2,000 scfm

B. EQUIPMENT SPECIFIC FEDERALLY ENFORCEABLE REQUIREMENTS: The requirements specified under this subsection are enforceable by the SMAQMD, U.S. EPA and the public.

EMISSION LIMITATION REQUIREMENTS:

1. Emissions from the Landfill Gas Flare (1997) shall not exceed the following: **[SMAQMD P/O 14749(Rev01)]**

Pollutant	Maximum Allowable Emissions
ROC	A. 2% of inlet NMOC (equivalent to a 98% NMOC destruction efficiency), or B. 20 ppmvd at 3% O2 measured as hexane
NOx (BACT)	0.06 lb/MMBTU (high heating value).
CO (BACT)	0.20 lb/MMBTU (high heating value).

EQUIPMENT SPECIFIC REQUIREMENTS – APC LANDFILL GAS FLARE (1997)

2. Emissions from the Landfill Gas Flare (1997) shall not exceed the following:
[SMAQMD P/O 14749(Rev01)]

Pollutant	Emission Factor (A) lb/MMcf	Maximum Allowable Emissions (B)	
		lb/day	lb/quarter
ROC	N/A	10	920
NOx	27.3	79	7,233
SOx	N/A	10	920
PM10	24.16	70	6,402
CO	91	262	24,111

(A) Emission factors for NOx and CO are based on SMAQMD permit limits of 0.06 lb/MMBTU and 0.20 lb/MMBTU respectively and a heat content of 455 BTU/scf of landfill gas.
Emission factor for PM10 is based on the initial performance test value which has been doubled to insure a compliance margin.

(B) Emissions for ROC and SOx are based on BACT trigger level limit of 10 lb/day.
Emissions based on 2,000 scfm landfill gas combustion rate, 24 hours/day and 92 days/quarter.

EQUIPMENT OPERATION AND MONITORING REQUIREMENTS:

3. The amount of landfill gas combusted by the Landfill Gas Flare (1997) shall not exceed the following limit:
[SMAQMD P/O 14749(Rev01)]

Flare Identifier	Maximum Allowable Landfill Gas Combusted by Landfill Gas Flare (1997) (A) million cubic feet/quarter
Landfill Gas Flare (1997)	265

(A) Based on the flare operating at maximum capacity of 2000 scfm, 24 hours/day and 92 days/quarter.

4. The sulfur content of the landfill gas combusted in the Landfill Gas Flare (1997) shall not exceed 1.3 grains/100 scf as hydrogen sulfide (H2S).
[SMAQMD P/O 14749(Rev01)]

5. A sampling port, or other method approved by the SMAQMD Air Pollution Control Officer, shall be installed at the inlet gas line to the Landfill Gas Flare (1997). The sampling port shall be located so that an accurate volume flow measurement can be performed.
[SMAQMD P/O 14749(Rev01)]

EQUIPMENT SPECIFIC REQUIREMENTS – APC LANDFILL GAS FLARE (1997)

6. The Landfill Gas Flare (1997) exhaust sample ports shall be permanent, accessible and located and constructed as per applicable U.S. EPA, CARB and U.S. OSHA requirements. **[SMAQMD P/O 14749(Rev01)]**

7. The Landfill Gas Flare (1997) shall be equipped with a temperature monitoring device.

   A. The thermocouple used to measure the flare temperature shall be located at a distance that is greater than the distance equivalent to 0.6 seconds at the maximum flow rate downstream of the burner.

   B. The temperature monitoring device shall be equipped with a continuous recorder.

   C. The temperature monitoring device shall have an accuracy of ±1 percent of the temperature being measured expressed in degrees Celsius or ±0.5 degrees C, whichever is greater.

   D. The temperature monitoring device is not precluded from expressing measurements in degrees Fahrenheit as long as the aforementioned accuracy is met.

   E. The owner or operator shall submit to the SMAQMD Air Pollution Control Officer for approval a description of the temperature monitoring device calibration procedure and schedule of calibration.

   [SMAQMD P/O 14749(Rev01)]

8. The Landfill Gas Flare (1997) shall operate at a minimum combustion zone temperature equal to the 3-hour average temperature (measured by the thermocouple specified in Condition No. 7) as determined during the most recent complying source test minus 28 degrees C (50 degrees F)

   (The data from the most recent source test is summarized in Attachment B indicating the 3-hour average temperature measured by the thermocouple in Condition No. 7.)

   A. The minimum combustion zone temperature shall not be in effect for a maximum of five days in each calendar year when emissions testing is being performed to determine if the required NMOC destruction efficiency or NMOC exhaust concentration can be met at a lower combustion zone temperature.

   [SMAQMD P/O 14749(Rev01)]

EQUIPMENT SPECIFIC REQUIREMENTS – APC LANDFILL GAS FLARE (1997)

RECORDKEEPING AND REPORTING REQUIREMENTS:

9. The following record shall be continuously maintained on site for the most recent 5 year period, except as noted, and shall be made available to the SMAQMD Air Pollution Control Officer upon request. Quarterly records shall be made available within 30 days of the end of the reporting period.
[SMAQMD P/O 14749(Rev01)]

Frequency	Information to be recorded
At all times	A. The following information measured during the initial performance test shall be maintained for the life of the Landfill Gas Flare (1997). Records of subsequent tests or monitoring shall be maintained for a minimum of 5 years. **[40 CFR 60.758(b)]** i. The average combustion temperature of Landfill Gas Flare (1997) measured at least every 15 minutes and averaged over the same time period as the performance test. **[40 CFR 60.758(b)(2)(i)]** ii. The percent reduction of NMOC, determined as specified in 40 CFR 60.752(b)(2)(iii)(B), achieved by the Landfill Gas Flare (1997). **[40 CFR 60.758(b)(2)(ii)]** B. All 3 hour periods of operation during which the Landfill Gas Flare (1997) average combustion temperature was below the limit established in Condition No. 8. **[40 CFR 60.758(c)(1)(i)]** C. All deviations that occur in continuous parameter monitoring data: **[40 CFR 63.1960]** i. Deviation is defined as when 1 hour or more of the hours during the 3 hour block averaging period does not constitute a valid hour of data. **[40 CFR 63.1965(b)]** ii. A valid hour of data must have measured values for at least three 15 minute monitoring periods within the hour. **[40 CFR 63.1965(b)]** iii. Continuous parameter monitoring data collected during the following events are not to be included in any 3 hour block average: **[40 CFR 63.1975(a) - (d)]** (a) Monitoring system breakdowns, repairs, calibration checks and zero (low level) and high level adjustments. (b) Startups. (c) Shutdowns. (d) Malfunctions

EQUIPMENT SPECIFIC REQUIREMENTS – APC LANDFILL GAS FLARE (1997)

Frequency	Information to be recorded
	D. Record of calibration reports for the temperature monitoring device. **[SMAQMD P/O 14749(Rev01)]**
Quarterly	E. The combined amount of landfill gas consumed in Landfill Gas Flare (1990) and Landfill Gas Flare (1997). (cubic feet/quarter) **[SMAQMD P/O 14749(Rev01)]**

10. A written report shall be submitted to the SMAQMD Air Pollution Control Officer annually by the date indicated and shall contain the following information. **[SMAQMD P/O 14749(Rev01)]**

Frequency	Information to be submitted
Annually by: February 28 for the previous calendar year	A. All 3-hour periods of operation during which the average Landfill Gas Flare (1997) combustion temperature was more than 50 degrees F C (28 degrees) below the 3-hour average Landfill Gas Flare (1997) combustion temperature during the most recent performance test at which compliance with 40 CFR 60.752(b)(2)(iii) was determined. **[40 CFR 60.758(c)(1)(i)]** B. All deviations that occur in continuous parameter monitoring data. **[40 CFR 63.1960]** C. Description and duration of all periods when Landfill Gas Flare (1997) was not operating for a period exceeding 1 hour and length of time Landfill Gas Flare (1997) was not operating. **[40 CFR 60.757(f)(3)]**

EMISSION TESTING REQUIREMENTS:

11. An emission test of Landfill Gas Flare (1997) shall be conducted each calendar year to demonstrate compliance with Condition Nos. 1, 2, 4 and 8:

    A. Submit a source test plan to the SMAQMD Air Pollution Control Officer for approval at least 30 days before the source test is to be performed.

    B. Notify the SMAQMD Air Pollution Control Officer at least 7 days prior to the source test date.

    C. Submit the source test report to the SMAQMD Air Pollution Control Officer within 60 days from the completion of the source test.

EQUIPMENT SPECIFIC REQUIREMENTS – APC LANDFILL GAS FLARE (1997)

D. The source test shall be conducted at the inlet and the exhaust of the landfill gas flare and shall include a test for:
   i. Either
      (a) NMOC destruction efficiency, or
      (b) Total NMOC (ppmvd at 3% O2 measured as hexane, exhaust only)
   ii. Oxides of nitrogen (exhaust only)
   iii. Carbon monoxide (exhaust only)
   iv. Hydrogen sulfide (inlet only)
   v. Combustion zone temperature
   vi. Combustion zone temperature
   vii. Landfill gas flow rate

[SMAQMD P/O 14749(Rev01)]

ATTACHMENT B

Actual Flare Combustion Temperature Observed
During the Most Recent Landfill Gas Flare (1997) Source Test

Date of Test	Actual 3-Hour Average Flare Combustion Temperature Observed During Source Test degrees F	Minimum 3-Hour Flare Combustion Temperature to Demonstrate Continuous Compliance degrees F
09-26-2006	1525	1475
Historical Data ↓		
09-21-2005	1450	1400
09-29-2004	1450	1400
09-24-2002	1375	1325
08-22-2000	1375	1325

INSIGNIFICANT EMISSIONS UNITS

The following systems are considered insignificant emissions units and are not subject to equipment specific requirements. However, these units are required to comply with all applicable general requirements:

Equipment Description	Basis for the Exemption
Vehicles used to transport passengers or freight	SMAQMD Rule 201 Section 111.1 Vehicles used to transport passengers or freight.
Small internal combustion engines used for welders, compressors and generators.	SMAQMD Rule 201 Section 112.1 IC engines < 50 hp
Storage containers for liquefied or compressed gases	SMAQMD Rule 201 Section 117.1 Containers or tanks used exclusively for the storage of liquefied or compressed gases
Storage containers for diesel fuel, compressor oil or lubricants with vapor pressure less than 5 mm Hg	SMAQMD Rule 201 Section 117.2 Containers or tanks used exclusively for the storage of unheated organic materials with an initial boiling point of 302 degrees F or greater or with an organic vapor pressure of 0.1 psia or less (at 20 degrees C).
Storage containers less than 23,000 liters for diesel fuel, compressor oil or lubricants with vapor pressure less than 77.5 mm Hg	SMAQMD Rule 201 Section 117.3 Containers, tanks or associated transfer equipment used exclusively for the storage of organic liquids with a vapor pressure of 1.5 psia or less (at 20 degrees C) and having a storage capacity of 6076 gallons or less.

City of SACRAMENTO
Recycling & Solid Waste

May 27, 2014
Addendum No. 2 to Bid No. B14131771001
for 28th Street Landfill Flare Replacement

The due date for this bid has been changed:

Bids to be received before 2:00 PM
Wednesday, June 4, 2014
New City Hall, Office of the City Clerk
915 I Street, 5th Floor
Sacramento, CA 95814

Only the date has changed. Time and location remain unchanged.

General Services
Recycling & Solid Waste
916-808-4900
2812 Meadowview Road, Bldg 1
Sacramento, CA 95832
www.sacrecycle.org

City of SACRAMENTO
Recycling & Solid Waste

May 29, 2014
Addendum No. 3 to Bid No. B14131771001 for 28th Street Landfill Flare Replacement

City staff received multiple emails from prospective bidders, which are addressed below.

1. **Specification 102: Part 1, 1.1B say mobilization is limited to 5% of the overall bid. Part 1.3B.1 refers to 10%. Which is the correct percentage?**

   5%. Part 1.3B.1 states that Contractor will receive 50% of the Lump Sum after completion of 10% of the Contract Work.

2. **Specification 1050, Part 3.2B: Given the small work area inside the flare yard, is it necessary to install two (2) permanent benchmarks? If yes, what is the specification for material and construction of the permanent benchmarks?**

   No. One benchmark is sufficient. Please note that the location of the permanent benchmark should be placed in an area not subject to settlement (i.e., permanent concrete slab) that has been approved by the Owner or their authorized representative.

3. **Specification 2220: Please clarify that 6 inches of bedding aggregate is required above and below buried electrical conduit.**

   Buried electrical conduit shall be completed per NEC requirements. Any changes to the specifications for bedding materials and depths for buried conduits are subject to Engineer review and approval prior to the start of said work.

4. **Specification 11187: Part 2.04 A.2.g refers to a pile foundation for the flare. Please clarify.**

   Pile foundation will not be required. Please refer to Drawing 8 of the Contract Design for Flare and Blower skid concrete pad construction details.

5. **Specification 11187: Page 22 states that the stack testing should be completed within either 60 days or 45 days of the demonstration test completion – please clarify. Also this section requests the contractor to submit the testing procedures for the performance test to SMAQMD for approval. Normally this is done by the Owner's consulting engineers. Please clarify that the Contractor is to provide the submittal to the SMAQMD. Also, is CBI-LFG Specialty LLC considered an approved equal as an Equipment supplier (LFG Flare Manufacturer)?**
   "LFG Specialties LLC is a landfill gas equipment supplier dedicated to designing and manufacturing landfill gas extraction, control and recovery systems for the solid waste industry. With more than 700 flares and conditioning skids in operation worldwide"

   The Contractor will be required to provide source testing within 45 days of demonstrating the flare is operating as it should.

Chris Thoma, Program Analyst
Phone: (916) 808-4833
Email: cthoma@cityofsacramento.org

City of Sacramento, Recycling & Solid Waste Division
2812 Meadowview Road, Building 1, Sacramento, CA 95832
www.sacrecycle.org

The source test company, sub-contracted by the Contractor, is required to submit the testing work plan to the SMAQMD and receive approval from the SMAQMD prior to conducting the test.

SCS' involvement will be limited to obtaining the ATC permit for the project but is available to assist Contractor for any informational needs on the topic. The equipment from the vendor is an approved equal if it meets all requirements set forth in the Contract Documents (Design and Technical Specifications). The Design Engineer (SCS Engineers) will make the ultimate determination on if the vendor's equipment meets these requirements based upon review of all blower/flare vendor submittals.

6. **Is there water on site and if so are we able to use it for the project?**

   Yes. See Addendum 1, Section 12 for details.

7. **Is there appropriate backfill on site for the project?**

   The City has asphalt grindings on site, but no extra soil.

8. **Can Contractor use embedment bolts to secure flare to the pad? What are the bolt specifications?**

   No. Bolts for flare must be installed prior to pouring the Flare pad via use of the flare mounting template provided by the flare vendor. Bolt diameter is shown on Drawing 8, Detail 1/8. Please note that these bolts may be provided by the flare manufacturer, but in no case shall they be shorter than the length indicated on the Contract Design.

9. **How many hours of down time are you allowing the Contractor?**

   Total downtime will be determined by the SMAQMD with input from the City. To aid in this effort, the Contractor will need to provide the anticipated shut-down and start-up schedule to the City that is aimed at minimizing system downtime to the extent possible.

10. **Are there any work restrictions?**

    For work hours, Sacrament City Code 8.68.080 (http://www.qcode.us/codes/sacramento/view.php?topic=8-8_68-ii-8_68_080) limits construction activities that generate noise to 7:00 am – 6:00 pm, Monday-Saturday, and 9:00 am – 6:00 pm on Sundays.

    For access, the Contractor will receive a copy of the key that opens the two gates to the flare site: the 28th Street entrance gate, and the gate to the flare enclosure itself.

    Equipment may be staged at the work site, though at times may need to be staged nearby, across the road. There are two projects that are running concurrently with this one. Please Addendum #1, section 11, for full details.

    The only known hazardous material on site is a few oil drums. Insulation in the flares is carcinogenic if inhaled. Section 1.04 B. Landfill Safety Hazards of the bid document (see pages 80-81 of the PDF) outlines some potential safety risks. If the Contractor generates municipal waste during project work, the Contractor will work with the City to properly excavate and dispose of the material at an appropriate landfill.

11. **Please specify number of concrete breaks required.**

This number will vary depending on methods used to remove the concrete. The Contractor shall remove all concrete from under the existing flare and blower skid areas (as shown on Drawing 3 of the Contract Design) to allow for the new concrete pads to be appropriately constructed per the Contract Documents.

12. **Please provide electrical drawings of the site both above and below ground.**

    That info is not available in its entirety. Some drawings may be available via the City but are likely not indicative of all subsurface utilities within the work area(s). Given that, the Contractor shall provide all required subsurface utility locating prior to starting any below-grade work specified in the Contract.

13. **Are you requiring instrumentation to monitor H2S and Methane within the flare compound? If yes, what type of instrumentation?**

    It is the Contractor's responsibility (under their own Health and Safety plan) to provide sufficient air monitoring during the work to ensure the safety of their employees and other onsite personnel, including their sub-contractors. For general air monitoring, a 4-gas meter (oxygen, CO, H2S and methane) may be appropriate if it meets the requirements of the Contractor's H&S Plan, but it is the Contractor's overall responsibility to select the appropriate monitoring equipment for the work.

14. **In section 11187, Landfill Gas Flaring System, A.4 it calls for the Contractor's responsibility for the satisfactory operation of the system which includes the existing equipment. In Section 16010, Basic Electrical Requirements, B.1.b, it calls for the existing flare and equipment to have the ability to operate by control of the new system. Please clarify how and when this would happen? Please provide more detail on how the two flares will interact.**

    The connection of the existing blower/flare system will happen at Start-up (of new equipment) under the ultimate direction of the new equipment Vendor's Technician. The Contractor will be required to provide their electrician to the technician for 2 days minimum to complete the interconnection. New BFF Equipment supplied by the vendor must also have the capability for interconnection to the existing flare via use of electrical relays or other to the existing flare control panel(s), including having the ability to obtain real-time data collection, and control (turn on/off, measure temperature and flow, switch blowers, use new blowers, etc.) of the existing flare. These controls will need to be provided on the new flare control panel. Interconnection Cost between flares is included as an item on the Contractor's Bid Sheet. Should the Contractor need more information on the existing flare, they will need to get as-built info from the City.

15. **Drawing E-3 Note 4, requires all metallic fencing to have similar grounding methods and materials as shown on Detail 3 of the same drawing. Is the contractor required to ground other areas of the fence, besides the single gate entry, within the work site? If so, please clarify if every fence post should be grounded.**

    Grounding locations to existing fence are shown on the Drawing 9 (Sheet E-1). Grounding to gate is shown on E-3. There will be no more than three locations total; two for grounding rod locations (at most) and one to the fence.

CONTRACTOR NAME: BLUE FLAME CREW WEST, LLC

CITY OF SACRAMENTO

SEALED PROPOSAL

(MUST BE SIGNED BY BIDDER)

The Sealed Proposal will be received not later than **May 28, 2014**, at the Office of the City Clerk, New City Hall, at 915 I Street, 5th Floor, Sacramento, California and opened at **2:00 PM**, or as soon thereafter as business allows, on **May 28, 2014**, by the Office of the City Clerk, 915 I Street, Historic City Hall, Hearing Room, 2nd Floor, Sacramento, California.

TO THE HONORABLE CITY COUNCIL:

The undersigned hereby proposes and agrees to furnish any and all required labor, material, transportation, and services for

28TH STREET LANDFILL FLARE REPLACEMENT

in the City and County of Sacramento, California.

TOTAL BID: SIX HUNDRED NINETEEN THOUSAND eighthundred ninety six AND 14 cents. ($ 619,896.14).

The work herein described is to be performed in strict conformity with the Plans, City of Sacramento Standard Specifications (Resolution No. 89-216) and these Special Provisions, all as on file in the Office of the City Clerk, at the following unit prices.

Item No.	Description	Unit		Unit Cost	Amount
1	Mobilization & demobilization, including dust, noise and traffic control, observing health and safety provisions at all times, equipment storage or relocation per City, clean-up and site restoration, and coordination with landfill operator (City) or their authorized representative.	1	ls		
2	Survey including horizontal and vertical controls, staking the locations of the vertical LFG extraction wells, horizontal LFG collectors and LFG header and lateral alignments, condensate pumping system and LFG flaring system.	1	ls		
3	Utility location survey and protection of all existing above- and below-grade utilities in the work area	1	ls		
4	Furnish and install above-grade high-density polyethylene (HDPE) pipe and fittings, including LFG header connection piping and Unistrut supports; and, reinstallation of piping and fitting required for connection and reuse of equipment within the BFF.	1	ls		
5	Furnish, install and test skid-mounted LFG Flaring System, including existing utility clearances and protection, removal and restoration of existing roadway surfaces, grading and compaction, reinforced concrete pads and slabs, blower skid, vertical enclosed ground flare, all controls and instrumentations, piping valves, pipe supports, gauges, controls, lighting; complete in place, tested and ready for use.	1	ls		

SEE REVISED BID SHEET ATTACHED

6	Provide interconnection between existing operational flare and new LFG Flaring System control panel; complete in place, tested and ready for use. Work includes, connection and below-grade electrical work to existing control panel(s) for existing John Zink flare system at site, per the electrical drawings. Contractor to coordinate work with new flare equipment vendor and shall provide their electrical contractor for flare vendor technician for an estimated 2 days during start-up of new LFG Flaring System.	1	ls		
7	Furnish, install and test air rotary screw compressor, including drive motor, starter cubical, oil system, air system, integral refrigerated dryer, electro-pneumatic control panel, air receiver tank, reinforced concrete pad, overhead cover. Service air connections with quick-disconnect shall be provided to the flaring system.	1	ls		
8	Remove and replace chain link fencing and gates if necessary to be removed for construction of new blower/flare station (BFS) equipment.	1	lf		
9	Site electrical work for BFS System and electrical grounding for said system, including coordination with Utility Provider, complete in place, tested and ready for use.	1	ls		
10	Prepare as-built drawings, including red-line markups, vendor As-Built Drawings, and any other affiliated information as set forth in the Contract Technical Specifications.	1	ls		
11	De-activate and/or dismantle existing BFS components and demolish existing concrete pads within the work area. Reuse, reinstall, and re-activate blower and ancillary equipment in other BFF site location. Includes all electrical reassembly and removal of old components (Blowers, compressors, condensate tank, miscellaneous piping and BFS components not needed for the new system to a City designated area near site), and connection and reactivation of reused equipment. Reactivation includes all necessary fittings and components (e.g., expansion couplings, etc.) required to retrofit blower at new location. Includes grading and restoration of the dismantling work area to prepare for new concrete pads and equipment.	1	ls		
12	Connection of existing condensate sump to new BFS System and existing condensate storage tank, activation, complete and in place, and ready for operation. Includes, all necessary electrical, pneumatic, and plumbing required to provide connectivity and be operable with the new BFS components.	1	ls		
13	Perform flare source test per SMAQMD requirements; complete as specified and directed by the Engineer.	1	ls		
	SUBTOTAL				
	TOTAL COST				

SPECIFIED BY SUBCONTRACTOR

If awarded the Agreement, the undersigned agrees to sign said Agreement and furnish the necessary surety bonds and insurance certificates within ten (10) days after receipt of the notice of award of Agreement, and to begin work within fifteen (15) days after the Notice to Proceed by the City.

In determining the amount bid by each bidder, the City shall disregard mathematical errors in addition, subtraction, multiplication, and division that appear obvious on the face of the Proposal. When such a mathematical error appears on the face of the Proposal, the City shall have the right to correct such error and to compute the total amount bid by said bidder on the basis of the corrected figure or figures.

When an item price is required to be set forth in the Proposal, and the total for the item set forth separately does not agree with a figure which is derived by multiplying the item price times the Engineer's estimate of the quantity of work to be performed for said item, the item price shall prevail over the sum set forth as the total for the item unless, in the sole discretion of the City, such a procedure would be inconsistent with the policy of the bidding procedure. The total paid

CONSTRUCTION BID WORKSHEET
FLARE REPLACEMENT DESIGN
SACRAMENTO CITY LANDFILL, SACRAMENTO, CALIFORNIA

4/21/2014
Revised 5/19/2014

Item No.	Description	Unit		Unit Cost	Amount
1	Mobilization & demobilization, including dust, noise and traffic control, observing health and safety provisions at all times, equipment storage or relocation per City, clean-up and site restoration, and coordination with landfill operator (City) or their authorized representative.	1	ls	28,987.82	28,987.82
2	Survey including horizontal and vertical controls, staking the locations of the vertical LFG extraction wells, horizontal LFG collectors and LFG header and lateral alignments, condensate pumping system and LFG flaring system.	1	ls	10,640.10	10,640.10
3	Utility location survey and protection of all existing above- and below-grade utilities in the work area	1	ls	3,129.44	3,129.44
4	Furnish and install above-grade high-density polyethylene (HDPE) ping and fittings, including LFG header connection piping and Unistrut supports; and, reinstallation of piping and fitting required for connection and reuse of equipment within the BFF.	1	ls	9,253.70	9,253.70
5	Furnish, install and test skid-mounted LFG Flaring System, including existing utility clearances and protection, removal and restoration of existing roadway surfaces, grading and compaction, reinforced concrete pads and slabs, blower skid, vertical enclosed ground flare, all controls and instrumentations, piping valves, pipe supports, gauges, controls, lighting; complete in place, tested and ready for use.	1	ls	432,298.86	432,298.86
6	Provide interconnection between existing operational flare and new LFG Flaring System control panel; complete in place, tested and ready for use. Work includes, connection and below-grade electrical work to existing control panel(s) for existing John Zink flare system at site, per the electrical drawings. Contractor to coordinate work with new flare equipment vendor and shall provide their electrical contractor for flare vendor technician for an estimated 2 days during start-up of new LFG Flaring System.	1	ls	22,962.64	22,962.64
7	Furnish, install and test air rotary screw compressor, including drive motor, starter cubical, oil system, air system, integral refrigerated dryer, electro-pneumatic control panel, air receiver tank, reinforced concrete pad, overhead cover. Service air connections with quick-disconnect shall be provided to the flaring system.	1	ls	21,347.39	21,347.39
8	Remove and replace chain link fencing and gates if necessary to be removed for construction of new blower/flare station (BFS) equipment.	1	lf	2,768.37	2,768.37
9	Site electrical work for BFS System and electrical grounding for said system, including coordination with Utility Provider, complete in place, tested and ready for use.	1	ls	33,324.19	33,324.19
10	Prepare as-built drawings, including red-line markups, vendor As-Built Drawings, and any other affiliated information as set forth in the Contract Technical Specifications.	1	ls	5,633.00	5,633.00
11	De-activate and/or dismantle existing BFS components and demolish existing concrete pads within the work area. Reuse, reinstall, and re-activate blower and ancillary equipment in other BFF site location. Includes all electrical reassembly and removal of old components (Blowers, compressors, condensate tank, miscellaneous piping and BFS components not needed for the new system to be disposed of by proper means or recycled as appropriate), and connection and reactivation of reused equipment. Reactivation includes all necessary fittings and components (e.g., expansion couplings, etc.) required to retrofit blower at new location. Includes grading and restoration of the dismantling work area to prepare for new concrete pads and equipment.	1	ls	34,140.08	34,140.08
12	Connection of existing condensate sump to new BFS System and existing condensate storage tank, activation, complete and in place, and ready for operation. Includes, all necessary electrical, pneumatic, and plumbing required to provide connectivity and be operable with the new BFS components.	1	ls	4,625.45	4,625.45
13	Perform flare source test per SMAQMD requirements; complete as specified and directed by the Engineer.	1	ls	10,785.09	10,785.09
	SUBTOTAL				$619,896.14
	TOTAL ESTIMATED COST				$619,896.14

Notes:

ls = lump sum
lf = lineal feet

for each such item of work shall be based upon the item price and not the total price. Should the Proposal contain only total price for the item and the item price is omitted, the City shall determine the item price by dividing the total price for the item by the Engineer's estimate of the estimated quantities of work to be performed as items of work.

If the Proposal contains neither the item price nor the total price for the item, then it shall be deemed incomplete and the Proposal shall be disregarded.

The undersigned has examined the location of the proposed Work, the local conditions at the place where the Work is to be done, is familiar with the Contract Documents and is familiar and expressly agrees to the liquidated damages provision of the Contract Documents. The undersigned has checked carefully all of the foregoing figures and understands that the City of Sacramento will not be responsible for any errors or omissions on the part of the undersigned in making up this Bid Proposal.

Enclosed is Bid Proposal Guarantee, as required, consisting of a bidder's bond or other acceptable security for not less than ten percent (10%) of the amount Bid Proposal.

The undersigned agrees that all addenda received and acknowledged herein shall become a part of and be included in this Bid Proposal. This Bid Proposal includes the following addenda:

Add. #	Addendum No. 1	DATE	5/21/14
Add. #	Addendum No. 2	DATE	5/27/14
Add. #	Addendum No. 3	DATE	5/29/14

NOTE: State whether your concern is a corporation, a co-partnership, private individual, or individuals doing business under a firm name.

If the Bidder is a corporation, the Bid Proposal must be executed in the name of the corporation and must be signed by a duly authorized officer of the corporation.

If the Bidder is a partnership, the Bid Proposal must be executed in the name of the partnership and one of the partners must subscribe their signature thereto as the authorized representative of the partnership.

AMOUNT OF BID PROPOSAL GUARANTEE ENCLOSED:

($ 61,989.61) not less than ten percent (10%) of amount Bid Proposal

FOR CITY USE ONLY

BID BOND SECURITY

- ☐ *Properly Signed*
- ☐ *Improperly Signed*
- ☐ *Not Included*
- ☐ *Not Required*

TYPE OF DEPOSIT

- ☑ *Bid Bond*
- ☐ *Cashier/Certified Check*
- ☐ *Other* _____

Initial: _____

CONTRACTOR: BLUE FLAME CREW WEST, LLC

By: _____
(Signature)

Timothy A. Boos
(Print or Type)

Title PRESIDENT

Address P.O. BOX 525
NAPERVILLE IL 60566

Telephone No. 312 560-2560

Fax No. —

EMAIL ADDRESS tboos@blueflamecc.com

Date June 3, 2014

PLEASE PRINT CLEARLY AS BID RESULTS WILL BE SENT VIA EMAIL

Contractor's License No. 566012 Type A

Expiration Date 5/31/15

Tax I.D. Nos.- Fed. 80-0959448 State 201330910360 (LLC)

City of Sacramento Business Operation Tax Certificate No. 025-1274-7 (EDD)
(City will not award contract if Certificate Number is missing.)

CITY CERTIFICATE APPLIED FOR 5/25/14

Document A310 TM – 2010

Conforms with The American Institute of Architects AIA Document 310

Bid Bond

CONTRACTOR:
(Name, legal status and address)
Blue Flame Crew West, LLC
PO Box 525
Naperville, IL 60566

SURETY:
(Name, legal status and principal place of business)
Berkley Insurance Company
475 Steamboat Road
Greenwich, CT 06830
Mailing Address for Notices

This document has important legal consequences. Consultation with an attorney is encouraged with respect to its completion or modification.

Any singular reference to Contractor, Surety, Owner or other party shall be considered plural where applicable.

OWNER:
(Name, legal status and address)
City of Sacramento
915 I Street, 5th Floor
Sacramento, CA 95814

BOND AMOUNT: $ 10% Ten Percent of Amount Bid

PROJECT:
(Name, location or address, and Project number, if any)
28th Street Landfill Flare Replacement. Project No. B14131771001

The Contractor and Surety are bound to the Owner in the amount set forth above, for the payment of which the Contractor and Surety bind themselves, their heirs, executors, administrators, successors and assigns, jointly and severally, as provided herein. The conditions of this Bond are such that if the Owner accepts the bid of the Contractor within the time specified in the bid documents, or within such time period as may be agreed to by the Owner and Contractor, and the Contractor either (1) enters into a contract with the Owner in accordance with the terms of such bid, and gives such bond or bonds as may be specified in the bidding or Contract Documents, with a surety admitted in the jurisdiction of the Project and otherwise acceptable to the Owner, for the faithful performance of such Contract and for the prompt payment of labor and material furnished in the prosecution thereof; or (2) pays to the Owner the difference, not to exceed the amount of this Bond, between the amount specified in said bid and such larger amount for which the Owner may in good faith contract with another party to perform the work covered by said bid, then this obligation shall be null and void, otherwise to remain in full force and effect. The Surety hereby waives any notice of an agreement between the Owner and Contractor to extend the time in which the Owner may accept the bid. Waiver of notice by the Surety shall not apply to any extension exceeding sixty (60) days in the aggregate beyond the time for acceptance of bids specified in the bid documents, and the Owner and Contractor shall obtain the Surety's consent for an extension beyond sixty (60) days.

If this Bond is issued in connection with a subcontractor's bid to a Contractor, the term Contractor in this Bond shall be deemed to be Subcontractor and the term Owner shall be deemed to be Contractor.

When this Bond has been furnished to comply with a statutory or other legal requirement in the location of the Project, any provision in this Bond conflicting with said statutory or legal requirement shall be deemed deleted herefrom and provisions conforming to such statutory or other legal requirement shall be deemed incorporated herein. When so furnished, the intent is that this Bond shall be construed as a statutory bond and not as a common law bond.

Signed and sealed this 28th day of May, 2014

(Witness)

Blue Flame Crew West, LLC
(Principal) *(Seal)*

By:
(Title) PRESIDENT

(Witness) Hina Azam

Berkley Insurance Company
(Surety) *(Seal)*

By:
(Title) William Reidinger Attorney-in-Fact

BERKLEY INSURANCE COMPANY CORPORATE SEAL DELAWARE

No. BI-SurePath

POWER OF ATTORNEY
BERKLEY INSURANCE COMPANY
WILMINGTON, DELAWARE

KNOW ALL MEN BY THESE PRESENTS, that BERKLEY INSURANCE COMPANY (the "Company"), a corporation duly organized and existing under the laws of the State of Delaware, having its principal office in Greenwich, CT, has made, constituted and appointed, and does by these presents make, constitute and appoint: William Reidinger Assurance Agency, Ltd. Schaumburg, IL

Surety Bond No.: Bid Bond

Principal: Blue Flame Crew West, LLC

Obligee City of Sacramento

Amount of Bond: See Bond Form

its true and lawful Attorney-in-Fact, to sign its name as surety only as delineated below and to execute, seal, acknowledge and deliver any and all bonds and undertakings, with the exception of Financial Guaranty Insurance, providing that no single obligation shall exceed **Fifty Million and 00/100 U.S. Dollars (U.S.$50,000,000.00)**, to the same extent as if such bonds had been duly executed and acknowledged by the regularly elected officers of the Company at its principal office in their own proper persons.

This Power of Attorney shall be construed and enforced in accordance with, and governed by, the laws of the State of Delaware, without giving effect to the principles of conflicts of laws thereof. This Power of Attorney is granted pursuant to the following resolutions which were duly and validly adopted at a meeting of the Board of Directors of the Company held on January 25, 2010:

RESOLVED, that, with respect to the Surety business written by Berkley Surety Group, LLC, the Chairman of the Board, Chief Executive Officer, President or any Vice President of the Company, in conjunction with the Secretary or any Assistant Secretary are hereby authorized to execute powers of attorney authorizing and qualifying the attorney-in-fact named therein to execute bonds, undertakings, recognizances, or other suretyship obligations on behalf of the Company, and to affix the corporate seal of the Company to powers of attorney executed pursuant hereto; and said officers may remove any such attorney-in-fact and revoke any power of attorney previously granted; and further

RESOLVED, that such power of attorney limits the acts of those named therein to the bonds, undertakings, recognizances, or other suretyship obligations specifically named therein, and they have no authority to bind the Company except in the manner and to the extent therein stated; and further

RESOLVED, that such power of attorney revokes all previous powers issued on behalf of the attorney-in-fact named; and further

RESOLVED, that the signature of any authorized officer and the seal of the Company may be affixed by facsimile to any power of attorney or certification thereof authorizing the execution and delivery of any bond, undertaking, recognizance, or other suretyship obligation of the Company; and such signature and seal when so used shall have the same force and effect as though manually affixed. The Company may continue to use for the purposes herein stated the facsimile signature of any person or persons who shall have been such officer or officers of the Company, notwithstanding the fact that they may have ceased to be such at the time when such instruments shall be issued.

IN WITNESS WHEREOF, the Company has caused these presents to be signed and attested by its appropriate officers and its corporate seal hereunto affixed this 22 day of January, 2013.

(Seal) Attest: By _____
Ira S. Lederman
Senior Vice President & Secretary

Berkley Insurance Company
By _____
Jeffrey M. Hafter
Senior Vice President

STATE OF CONNECTICUT)
) ss:
COUNTY OF FAIRFIELD)

Sworn to before me, a Notary Public in the State of Connecticut, this 22 day of January, 2013, by Ira S. Lederman and Jeffrey M. Hafter who are sworn to me to be the Senior Vice President and Secretary, and the Senior Vice President, respectively, of Berkley Insurance Company.

EILEEN KILLEEN
NOTARY PUBLIC, STATE OF CONNECTICUT
MY COMMISSION EXPIRES JUNE 30, 2017

_____
Notary Public, State of Connecticut

CERTIFICATE

I, the undersigned, Assistant Secretary of BERKLEY INSURANCE COMPANY, DO HEREBY CERTIFY that the foregoing is a true, correct and complete copy of the original Power of Attorney; that said Power of Attorney has not been revoked or rescinded and that the authority of the Attorney-in-Fact set forth therein, who executed the bond or undertaking to which this Power of Attorney is attached, is in full force and effect as of this date.

Given under my hand and seal of the Company, this 28th day of May, 2014.

(Seal)

_____
Andrew M. Tuma

BID PROPOSAL GUARANTEE

KNOW ALL MEN BY THESE PRESENTS,

That we,_____

as Principal, and _____

a corporation duly organized under the laws of the State of _____ and duly licensed to become sole surety on bonds required or authorized by the State of California, as Surety, are held and firmly bound unto the City of Sacramento, hereinafter called the City, in the penal sum of ten percent (10%) of the (BASE OR LUMP SUM) Proposal of the Principal above named, or other amount as set forth in the Invitation to Bidders, submitted by said Principal to the City for the Work described below, for the payment of which sum in lawful money of the United States, well and truly to be made, we bind ourselves, our heirs, executors, administrators and successors, jointly and severally, firmly by these presents.

THE CONDITION OF THIS OBLIGATION IS SUCH
That whereas the Principal has submitted the above-mentioned Proposal to the City, for which Proposals are to be opened at the Department of City Clerk, City of Sacramento, located at **915 I Street, Historic City Hall, Hearing Room, 2nd Floor, Sacramento, CA 95814** up to the hour of 2:00 p.m. on **MAY 28, 2014** for the Work specifically described as follows:

28TH STREET LANDFILL FLARE REPLACEMENT

NOW, THEREFORE, if the aforesaid Principal is awarded the Contract and within the time and manner required under the Contract Documents, enters into a written Contract, in the prescribed form, in accordance with the Proposal, and files two (2) bonds with the City, one to guarantee faithful performance and the other to guarantee payment for labor and materials, and files the required insurance policies with the City, all as required by the Contract Documents or by law, then the obligation shall be null and void; otherwise it shall be and remain in full force and effect.

In the event suit is brought upon this bond by the Obligee and judgment is recovered, the Surety shall pay all costs incurred by the Obligee in such suit, including a reasonable attorney's fee to be fixed by the court, which sums shall be additional to the principal amount of this bond.

IN WITNESS THEREOF We have hereunto set our hands and seal this _____ day of _____ 20_____.

_____
(Contractor) (Seal)
By _____
Title _____

ORIGINAL APPROVED AS TO FORM:

_____
City Attorney

_____
(Surety)(Seal)
By _____
Title _____
Agent Name and Address _____
_____
Agent Phone # _____
Surety Phone # _____
California License # _____

LOCAL BUSINESS ENTERPRISE (LBE) PARTICPATION PROGRAM

NOTE: Proposers must provide responses to the following items. Failure to provide a response to each of the items in this section may be grounds for rejection of the proposal.

1. LBE FIVE PERCENT (5%) PARTICIPATION

On April 3, 2012, the Sacramento City Council adopted a Local Business Enterprise (LBE) Preference Program to provide enhanced opportunities for the participation of local business enterprises (LBEs) in the City's contracting and procurement activities. On November 19, 2013, City Council increased the LBE preference and authorized City departments to require minimum LBE participation levels in individual contracts. Under City Code section 3.60.270 , when the bid specifications for a City contract establish a minimum participation level for LBEs, no bidder on the contract shall be considered responsive unless its bid meets the minimum LBE participation level required by the bid specifications.

The City has established a minimum 5% participation level for LBEs on this contract. Pursuant to City Code Section 3.60.270, no bidder on this contract shall be considered responsive unless its bid meets or exceeds this minimum participation level.

Local Business Enterprise means a business enterprise, including but not limited to, a sole proprietorship, partnership, limited liability company, corporation, or other business entity that has a legitimate business presence in the city or unincorporated county of Sacramento. Evidence of legitimate business presence in the city or unincorporated county of Sacramento shall include:

1. Having a current City of Sacramento Business Operation Tax or County of Sacramento Business License; and
2. Having either of the following types of offices or workspace operating legally within the city or unincorporated county of Sacramento:
    a. The LBE's principle business office or workspace; or
    b. The LBE's regional, branch or satellite office with at least one full time employee located in the city or unincorporated county of Sacramento.

A. LOCAL BUSINESS ENTERPRISE (LBE)

Is the firm submitting the bid qualified as a local business enterprise? Check the appropriate box below:

☐ **YES** - the firm submitting the bid is qualified as a local business enterprise.

☒ **NO** - the firm submitting the bid is not qualified as a local business enterprise.

If the response to the above is YES, provide the City of Sacramento Business Operations Tax Certificate Number and/or County of Sacramento Business License Number:

_____

If the response to the above is YES, provide a current copy of the City of Sacramento Business Operations Tax Certificate and/or County of Sacramento Business License.

If the response to the above is YES, provide business office or workspace address*:

_____

_____

_____

* Address must be a physical address for the basis of location, this excludes P.O. Box addresses.

LOCAL BUSINESS ENTERPRISE (LBE) PARTICIPATION REQUIREMENTS

(City Contracts no Federal Funds Used)

I. LBE PARTICIPATION REQUIREMENT

On April 3, 2012, the Sacramento City Council adopted a Local Business Enterprise (LBE) Preference Program to provide enhanced opportunities for the participation of local business enterprises (LBEs) in the City's contracting and procurement activities. On November 19, 2013, City Council increased the LBE preference percentage and authorized City departments to require minimum LBE participation levels in specific contracts. Under City Code section 3.60.270, when the bid specifications for a City contract establish a minimum participation level for LBEs, no bidder on the contract shall be considered responsive unless its bid meets the minimum LBE participation level required by the bid specifications.

The City has established **a minimum 5% participation level for LBEs on this contract**. Pursuant to City Code Section 3.60.270, no bidder on this contract shall be considered responsive unless its bid meets or exceeds this minimum participation level.

Bidders shall submit proof to the City demonstrating that the business and each subcontractor, trucker, material supplier, or other business entity listed on the forms submitted are in compliance with all applicable laws relating to licensing and are not delinquent in payment of any City of Sacramento or County of Sacramento taxes, permits, or fees. Failure to submit the required LBE information may be grounds for finding the bid non-responsive.

II. LBE QUALIFICATION

A. A LBE designated in the bid must be qualified as a LBE prior to the time set for submission of bids.

B. Local Business Enterprise means a business enterprise, including but not limited to, a sole proprietorship, partnership, limited liability company, corporation, or other business entity that has a legitimate business presence in the city or unincorporated county of Sacramento. Proof of legitimate business presence in the city or unincorporated county of Sacramento shall include:

1. Having a current City of Sacramento Business Operation Tax or County of Sacramento Business License for at least twelve (12) consecutive months prior to submission of bid; and
2. Having either of the following types of offices or workspace operating legally within the city or unincorporated county of Sacramento for at least twelve (12) consecutive months prior to submission of bid:
    a. The LBE's principle business office or workspace; or
    b. The LBE's regional, branch or satellite office with at least one full time employee located in the city or unincorporated county of Sacramento.

C. A LBE must provide a physical address for the basis of location. This excludes P.O. Box addresses.

D. A LBE must provide a current copy of the City of Sacramento Business Operations Tax Certificate or County of Sacramento Business License.

III. DETERMINATION OF LBE PARTICIPATION LEVEL

A. LBE Participation: The percentage of LBE participation is determined based on the dollar value of the work to be performed or supplies to be furnished by certified LBEs designated in the bidder's Subcontractor and LBE Participation Verification Form, relative to the total dollar amount of the bid.

B. Participation Credit: To receive credit for participation:(1) an LBE subcontractor must be responsible for the execution of a distinct element of the work, must possess any license or certification required for the work, and must actually perform, manage, or supervise the work without subcontracting or otherwise shifting any portion of the work to another subcontractor; and (2) an LBE supplier must furnish materials, equipment, or supplies that the supplier sells as a recurring, although not necessarily primary, part of its business, and that are necessary for performance of the work.

C. Suppliers: Credit for an LBE supplier of materials, equipment, or supplies is counted as one hundred (100) percent of the amount paid to the supplier for the material, equipment, or supplies. To receive this credit, LBE suppliers must be listed on the bidder's Subcontractor and LBE Participation Verification Form.

D. Subcontractors (including truckers): To receive credit for an LBE subcontractor, the subcontractor must be listed on the bidder's Subcontractor and LBE Participation Verification Form.

- Truckers: Credit for an LBE trucker is counted as one hundred (100) percent of the amount paid to the trucker for trucking services, not including any amount paid to the trucker for the cost of any materials, equipment, or supplies being transported by the trucker.

IV. LBE REQUIREMENTS FOR CONTRACTOR

A. LBE Records: The Contractor shall maintain records of all subcontracts with verified LBE subcontractors and records of materials purchased from verified LBE suppliers for one (1) year after receiving final payment from the City. Such records shall show the name and business address of each LBE subcontractor or supplier and the total dollar amount actually paid each LBE subcontractor or supplier.

Not later than 30 days after completion of the work performed under the contract, a summary of these records shall be prepared, certified correct by the Contractor's authorized representative and furnished to the City. The Contractor shall provide such other information, records, reports, certifications or other documents as may

be required by City, to determine compliance with any provision of the LBE program or these specifications.

B. Performance of LBE Subcontractors and Suppliers: The LBEs listed by the Contractor shall perform the work and supply the materials, equipment, and supplies for which they are listed unless the Contractor has received prior written authorization from the City to perform the work with other forces or to obtain the material, equipment, or supplies from other sources. Reasons for requesting such authorization would include:

1. The listed LBE fails to execute a written contract based upon the general terms, conditions, plans, and specifications for the project.

2. The listed LBE becomes bankrupt or insolvent.

3. The listed LBE subcontractor fails to meet the bond requirements of the Contractor.

4. The work performed or the materials/equipment/supplies provided by the listed LBE are unsatisfactory or are not in accordance with the plans and specifications, or the listed LBE fails to perform its contractual obligations.

5. It would be in the best interest of the City.

C. Subcontractor Substitution: No substitution of an LBE subcontractor shall be made at any time without compliance with the Subletting and Subcontracting Fair Practices Act. If an LBE subcontractor is unable to perform successfully and is to be replaced, the Contractor shall make reasonable efforts to replace the original LBE subcontractor with another verified LBE subcontractor. The new LBE subcontractor must be verified at the time of substitution.

D. Reporting and Utilization Requirements and Sanctions: Failure to provide specific information, records, reports, certifications, or any other documents required for compliance with these specifications, or failure to utilize one or more LBEs in substantial compliance with the LBE utilization indicated in the Contractor's bid (unless otherwise authorized by City as provided herein, or when such failure results from changes to the work approved by the City), shall be considered a breach of the contract, and a deduction may be made from the contract amount. The deduction shall be not more than ten (10) percent of the value of the work or materials/equipment/supplies that the subject LBE(s) were listed to perform/provide in the Contractor's bid, and shall be deducted from any payment due to the Contractor. This is in addition to any deduction that may be made under any other provision of the contract, the Sacramento City Code, or State law.

E. Hearing and Review of Division Manager Decision: Prior to making a deduction pursuant to Section IV (D), above, the City shall provide written notice of the proposed deduction to the Contractor, and the Contractor may, not later than five (5) working days after receiving such notice, provide a written request to City for a hearing to contest the proposed deduction. Upon receipt of a timely written

request from the Contractor, the City shall schedule a hearing before the Division Manager (as defined in the City's Standard Specifications for Public Construction), and written notice of the date, time and location of the hearing shall be provided to the Contractor not less than five (5) working days prior to the date of the hearing. The hearing shall be conducted in the manner specified in Section 4-8 of the Standard Specifications, and the Division Manager shall prepare and forward to the Contractor a written decision as soon as practicable after the hearing. The Division Manager's decision shall be subject to review in accordance with the provisions of Section 4-9 of the Standard Specifications. Failure to request such review in compliance with the requirements set forth in Section 4-9 shall constitute acceptance of the Division Manager's decision by the Contractor.

The written notices and requests described above shall be provided by registered or certified mail (return receipt requested), by telecopy, by personal delivery, or by any other method that provides reliable evidence of the date of receipt. Written notice provided by telecopy shall be deemed received on the date that it is transmitted and transmission is confirmed by the transmitting machine. Written notice provided by personal delivery shall be deemed received on the date of delivery.

V. DEFINITIONS

A. Local Business Enterprise (LBE): A business enterprise, including but not limited to, a sole proprietorship, partnership, limited liability company, corporation, or any other business entity that has a legitimate business presence in the city or unincorporated county of Sacramento.

B. Contractor: The sole proprietorship, partnership, limited liability company, corporation, or any other business entity entering into a contract with the City of Sacramento.

C. Subcontractor: The sole proprietorship, partnership, limited liability company, corporation, or other business entity entering into a contract with the prime contractor to perform a portion of the work.

D. Supplier: The sole proprietorship, partnership, limited liability company, corporation, or other business entity to provide materials, equipment, or supplies necessary for performance of the work.

E. Proposal: Any response to a City solicitation for Proposals or Qualifications.

F. Bid: Any response to a City solicitation for bids.

City of
SACRAMENTO

Subcontractor and Local Business Enterprise (LBE) Participation Form

THIS FORM MUST BE SUBMITTED WITH THE SEALED BID PROPOSAL
USE ONLY BASE BID AMOUNT TO ESTIMATE DOLLAR VALUE

To be eligible for award of this contract, the bidder shall list the business entities used to attain the 5% LBE requirement. Additionally, the bidder shall list all other subcontractors who perform work, render service, or provide materials in an amount in excess of one-half of 1 percent of the total bid amount. In the case of bids for the construction of streets and highways, including bridges, subcontractors whose subcontract value exceeds one-half of 1 percent of the total bid or ten thousand dollars ($10,000), whichever is greater, shall be listed. Estimated dollar values shall be provided for all work / services listed. The failure to attain the 5% LBE participation or the inclusion of false information or the omission of required information will render the bid non-responsive.

Prime Contractor Name: Blue Flame Gen West LLC Base Bid Amount: $619 896.14 Is the Prime Contractor a LBE ? ____Yes X No

Business Entity/Subcontractor Name and Address	Subcontractor License No.	Indicate LBE (subject to verification)	Items of Work and/or Description of Work, Services, or Materials to be provided to complete contract	Estimated Dollar Value of Work, Services, or Materials to be provided for Base Bid
INDEPENDENT ELECTRIC SUPPLY 4351 NORTHGATE BLVD SACRAMENTO CA 95834		Y	ELECTRIC PARTS	15,000
CAVALRY CONSTRUCTION 53 COMMERCE PLACE SUITE D VACAVILLE CA 95687	908395	N	CONCRETE FLATWORK/DEMO	13,500
R. ADAME TRUCKING 2008 SAN Esteban Circle ROSEVILLE CA	0352231	N	TRUCKING	1500
A+A Concrete Supply 8272 Berry Avenue SACRAMENTO CA 95828		Y	CONCRETE	3000
GRANITE CONSTRUCTION SUPPLY 4105 BRADSHAW RD SACRAMENTO, CA 95827		Y	AGGREGATE SUPPLY	2500

The Prime Contractor hereby certifies that each subcontractor listed on this Subcontractor and LBE Participation Form has been notified that it has been listed and has consented in writing to its name being submitted for this contract. The Prime Contractor also certifies that it will notify each subcontractor listed on this Form in writing if the contract award is made to the Prime Contractor, and will make all documentation relevant to the subcontractor and LBE participation available to City of Sacramento upon request. The Prime Contractor further certifies that all of the information contained in this Form is true and correct and acknowledges that the City will rely on the accuracy of this information in awarding the contract.

COPY AND ATTACH ADDITIONAL SHEETS AS NECESSARY

LBE PRIME CONTRACTOR AND SUBCONTRACTOR PARTICIPATION VERIFICATION INFORMATION ARE DUE BY CLOSE OF BUSINESS TWO DAYS AFTER BID OPENING.
THE SUBCONTRACTOR LICENSING NUMBER IS DUE WITHIN 24 HOURS OF THE BID DUE DATE AND TIME.

City of
SACRAMENTO

Subcontractor and Local Business Enterprise (LBE) Participation Form

THIS FORM MUST BE SUBMITTED WITH THE SEALED BID PROPOSAL
USE ONLY BASE BID AMOUNT TO ESTIMATE DOLLAR VALUE

To be eligible for award of this contract, the bidder shall list the business entities used to attain the 5% LBE requirement. Additionally, the bidder shall list all other subcontractors who perform work, render service, or provide materials in an amount in excess of one-half of 1 percent of the total bid amount. In the case of bids for the construction of streets and highways, including bridges, subcontractors whose subcontract value exceeds one-half of 1 percent of the total bid or ten thousand dollars ($10,000), whichever is greater, shall be listed. Estimated dollar values shall be provided for all work / services listed. The failure to attain the 5% LBE participation or the inclusion of false information or the omission of required information will render the bid non-responsive.

Prime Contractor Name: BLUE FLAME GRW WEST LLC Base Bid Amount: 619,896.14 Is the Prime Contractor a LBE ? ____Yes X No

Business Entity/Subcontractor Name and Address	Subcontractor License No.	Indicate LBE (subject to verification)	Items of Work and/or Description of Work, Services, or Materials to be provided to complete contract	Estimated Dollar Value of Work, Services, or Materials to be provided for Base Bid
SUN BELT RENTALS 3751 COMMERCE DR WEST SACRAMENTO, CA 95691		Y	EQUIPMENT RENTAL	6,000
AAA CRANE SERVICES 1834 Auburn Blvd SACRAMENTO CA 95815		Y	CRANE RENTAL	4,400
QUINCY ENGINEERING 3247 RAMOS CIRCLE SACRAMENTO CA 95827		Y	SURVEYING	8500
PERENNIAL ENERGY WEST PLAINS, MO 65775		N	LFG FLARE SYSTEM	270,000
BLOCKA CONSTRUCTION 4455 Enterprise St FREMONT, CA 94538		N	ELECTRICAL SERVICE	40,000

The Prime Contractor hereby certifies that each subcontractor listed on this Subcontractor and LBE Participation Form has been notified that it has been listed and has consented in writing to its name being submitted for this contract. The Prime Contractor also certifies that it will notify each subcontractor listed on this Form in writing if the contract award is made to the Prime Contractor, and will make all documentation relevant to the subcontractor and LBE participation available to City of Sacramento upon request. The Prime Contractor further certifies that all of the information contained in this Form is true and correct and acknowledges that the City will rely on the accuracy of this information in awarding the contract.

COPY AND ATTACH ADDITIONAL SHEETS AS NECESSARY

LBE PRIME CONTRACTOR AND SUBCONTRACTOR PARTICIPATION VERIFICATION INFORMATION ARE DUE BY CLOSE OF BUSINESS TWO DAYS AFTER BID OPENING.
THE SUBCONTRACTOR LICENSING NUMBER IS DUE WITHIN 24 HOURS OF THE BID DUE DATE AND TIME.

City of SACRAMENTO

Subcontractor and Local Business Enterprise (LBE) Participation Form

THIS FORM MUST BE SUBMITTED WITH THE SEALED BID PROPOSAL
USE ONLY BASE BID AMOUNT TO ESTIMATE DOLLAR VALUE

To be eligible for award of this contract, the bidder shall list the business entities used to attain the 5% LBE requirement. Additionally, the bidder shall list all other subcontractors who perform work, render service, or provide materials in an amount in excess of one-half of 1 percent of the total bid amount. In the case of bids for the construction of streets and highways, including bridges, subcontractors whose subcontract value exceeds one-half of 1 percent of the total bid or ten thousand dollars ($10,000), whichever is greater, shall be listed. Estimated dollar values shall be provided for all work / services listed. The failure to attain the 5% LBE participation or the inclusion of false information or the omission of required information will render the bid non-responsive.

Prime Contractor Name: BLUE FLAME CIRCLE WEST, LLC Base Bid Amount: $619,896.14 Is the Prime Contractor a LBE ? ____Yes X No

Business Entity/Subcontractor Name and Address	Subcontractor License No.	Indicate LBE (subject to verification)	Items of Work and/or Description of Work, Services, or Materials to be provided to complete contract	Estimated Dollar Value of Work, Services, or Materials to be provided for Base Bid
LINMORE FENCING & IRON WORKS 7512 WATSON WAY CITRUS HEIGHTS, CA 95610	711703	Y	FENCE REMOVAL & REPAIR	1500
SAIA LTL FREIGHT 1745 GEBRIAN ST WEST SACRAMENTO CA 95691		Y	FLARE FREIGHT	26,000
KLEINFELDER 3077 FITE CIR SACRAMENTO CA 95827		Y	CONCRETE TESTING	5000

The Prime Contractor hereby certifies that each subcontractor listed on this Subcontractor and LBE Participation Form has been notified that it has been listed and has consented in writing to its name being submitted for this contract. The Prime Contractor also certifies that it will notify each subcontractor listed on this Form in writing if the contract award is made to the Prime Contractor, and will make all documentation relevant to the subcontractor and LBE participation available to City of Sacramento upon request. The Prime Contractor further certifies that all of the information contained in this Form is true and correct and acknowledges that the City will rely on the accuracy of this information in awarding the contract.

COPY AND ATTACH ADDITIONAL SHEETS AS NECESSARY

LBE PRIME CONTRACTOR AND SUBCONTRACTOR PARTICIPATION VERIFICATION INFORMATION ARE DUE BY CLOSE OF BUSINESS TWO DAYS AFTER BID OPENING.
THE SUBCONTRACTOR LICENSING NUMBER IS DUE WITHIN 24 HOURS OF THE BID DUE DATE AND TIME.

DRUG-FREE WORKPLACE POLICY AND AFFIDAVIT

BID PROPOSAL MAY BE DECLARED NONRESPONSIVE IF THIS FORM (COMPLETED) IS NOT ATTACHED.
Pursuant to City Council Resolution CC90-498 dated 6/26/90 the following is required.

The undersigned contractor certifies that it and all subcontractors performing under this Agreement will provide a drug-free workplace by:

1. Publishing a "Drug-Free Workplace" statement notifying employees that the unlawful manufacture, distribution, dispensing, possession or use of a controlled substance is prohibited in the contractor's workplace and specifying the actions that will be taken against employees for violations of such prohibition.

2. Establishing a Drug-Free Awareness Program to inform employees about:

   a. The dangers of drug abuse in the workplace.
   b. The contractor's policy of maintaining a drug-free workplace.
   c. Any available drug counseling, rehabilitation, and employee assistance program.
   d. The penalties that may be imposed upon employees for drug abuse violations occurring in the workplace.

3. Notify employees that as a condition of employment under this Agreement, employees will be expected to:

   a. Abide by the terms of the statement.
   b. Notify the employer of any criminal drug statute conviction for a violation occurring in the workplace.

4. Making it a requirement that each employee to be engaged in the performance of the Agreement be given a copy on the "Drug-Free Workplace" statement.

5. Taking one of the following appropriate actions, within thirty (30) days of receiving notice from an employee or otherwise receiving such notice, that said employee has received a drug conviction for a violation occurring in the workplace:

   a. Taking appropriate disciplinary action against such an employee, up to and including termination; or
   b. Requiring such employee to participate satisfactorily in a drug abuse assistance or rehabilitation program approved for such purposes by a federal, state, or local health, law enforcement or other appropriate agency.

* I certify that no person employed by this company, corporation, or business has been convicted of any criminal drug statute violation on any job site or project where this company, corporation or business was performing was within three years of the date of my signature below.

EXCEPTION: _____ _____ _____
Date **Violation Type** **Place of Occurrence**

If additional space is required use back of this form.

*** The above statement will also be incorporated as a part of each subcontract agreement for any and all subcontractors selected for performance on this project.**

IN THE EVENT THIS COMPANY, CORPORATION, OR BUSINESS IS AWARDED THIS CONSTRUCTION AGREEMENT, AS A RESULT OF THIS BID; THE CONTRACTOR WITH HIS/HER SIGNATURE REPRESENTS TO THE CITY THAT THE INFORMATION DISCLOSED IN THIS DOCUMENT IS COMPLETE AND ACCURATE. IT IS UNDERSTOOD AND AGREED THAT FALSE CERTIFICATION IS SUBJECT TO IMMEDIATE TERMINATION BY THE CITY.

The Representations Made Herein On This Document Are Made Under Penalty Of Perjury.

CONTRACTOR'S NAME: BLUE FLAME CREW WEST, LLC

BY: [signature] PRESIDENT **Date:** June 3, 2014
Signature **Title**

Effects of violations: **a.** Suspension of payments under the Agreement. **b.** Suspension or termination of the Agreement. **c.** Suspension or debarment of the contractor from receiving any Agreement from the City of Sacramento for a period not to exceed five years.

MINIMUM QUALIFICATIONS QUESTIONNAIRE

Sacramento City Code Section 3.60.020 authorizes the Sacramento City Council to adopt standard minimum qualifications for bidders on competitively bid public works construction projects, and requires, among other provisions, that a bidder meet such minimum qualifications at the time of bid opening in order to bid. On July 31, 2007, the City Council adopted Resolution No. 2007-574 establishing these standard minimum qualifications. Pursuant to City Code section 3.60.020, a bidder failing to meet these minimum qualifications at the time of bid opening shall not be considered a responsible bidder for purposes of bidding on the subject project.

All bidders must demonstrate compliance with the minimum qualifications established by Resolution No. 2007-574 by completing all of the questions contained in this questionnaire. Bidder responses shall be limited to those operating business units, offices, branches and/or subsidiary divisions of the bidder that will be involved with the performance of any project work if awarded the contract. If a bidder answers "yes" to any single question, fails to submit a fully completed questionnaire, or submits false information, this will result in a determination that the minimum qualifications are not met, and the bidder shall not be considered a qualified bidder for purposes of bidding on this contract. If two or more entities submit a bid on a contract as a Joint Venture, each entity within the Joint Venture must separately meet these minimum qualifications for the Joint Venture to be considered a qualified bidder.

The City of Sacramento ("City") shall make its determination on the basis of the submitted questionnaire, as well as any relevant information that is obtained from others or as a result of investigation by the City. While it is the intent of this questionnaire to assist the City in determining whether bidders possess the minimum qualifications necessary to submit bids on the City's competitively bid public works construction contracts, the fact that a bidder submits a questionnaire demonstrating that it meets these minimum qualifications shall not in any way limit or affect the City's ability to: (1) review other information contained in the bid submitted by the bidder, and additional relevant information, and determine whether the contractor is a responsive and/or responsible bidder; or (2) establish pre-qualification requirements for a specific contract or contracts.

By submitting this questionnaire, the bidder consents to the disclosure of its questionnaire answers: (i) to third parties for purposes of verification and investigation; (ii) in connection with any protest, challenge or appeal of any action taken by the City; and (iii) as required by any law or regulation, including without limitation the California Public Records Act (Calif. Gov't Code sections 6250 et seq.). Each questionnaire must be signed under penalty of perjury in the manner designated at the end of the form, by an individual who has the legal authority to bind the bidder submitting the questionnaire. If any information provided by a bidder becomes inaccurate, the bidder shall immediately notify the City and provide updated accurate information in writing, under penalty of perjury.

FOR CITY CLERK USE ONLY

RESOLUTION NO.: 2007-574

DATE ADOPTED: July 31, 2007

QUESTIONNAIRE

NOTICE: **For firms that maintain other operating business units, offices, branches and/or subsidiary divisions that will not be involved with the performance of any project work if the firm is awarded the contract, references hereafter to "your firm" shall mean only those operating business units, offices, branches and/or subsidiary divisions that will be involved with the performance of any project work.**

All of the following questions regarding "your firm" refer to the firm (corporation, partnership or sole proprietor) submitting this questionnaire, as well as any firm(s) with which any of your firm's owners, officers, or partners are or have been associated as an owner, officer, partner or similar position within the last five years
The firm submitting this questionnaire shall not be considered a responsible bidder if the answer to any of these questions is "yes", or if the firm submits a questionnaire that is not fully completed or contains false information.

1. **Classification & Expiration Date(s) of California** Contractor's License Number(s) held by firm:

   BLUE FLAME Crew West, LLC Lic# 566012 EXP 5/31/15

2. Has a contractor's license held by your firm and/or any owner, officer or partner of your firm been revoked at anytime in the last five years?

   ☐ Yes ☒ No

3. Within the last five years, has a surety firm completed a contract on your firm's behalf, or paid for completion of a contract to which your firm was a party, because your firm was considered to be in default or was terminated for cause by the project owner?

   ☐ Yes ☒ No

4. At the time of submitting this minimum qualifications questionnaire, is your firm ineligible to bid on or be awarded a public works contract, or perform as a subcontractor on a public works contract, pursuant to either California Labor Code section 1777.1 (prevailing wage violations) or Labor Code section 1777.7 (apprenticeship violations)?

   ☐ Yes ☒ No

5. At any time during the last five years, has your firm, or any of its owners, officers or partners been convicted of a crime involving the awarding of a contract for a government construction project, or the bidding or performance of a government contract?

   ☐ Yes ☒ No

FOR CITY CLERK USE ONLY

RESOLUTION NO.: 2007-574

6. Answer either subsection A or B, as applicable:

A. Your firm has completed three or more government construction contracts in Sacramento County within the last five years: Within those five years, has your firm been assessed liquidated damages on three or more government construction contracts in Sacramento County for failure to complete contract work on time?

NOTE: If there is a pending administrative or court action challenging the assessment of liquidated damages on a government contract within the last five years, you need not include that contract in responding to this question.

☐ Yes ☐ No ☐ Not applicable

OR

B. Your firm has not completed at least three government construction contracts in Sacramento County within the last five years: Within the last three years, has your firm been assessed liquidated damages on three or more government construction contracts for failure to complete contract work on time?

NOTE: If there is a pending administrative or court action challenging an assessment of liquidated damages on a government contract within the last three years, you need not include that contract in responding to this question.

☐ Yes ☒ No ☐ Not applicable

7. In the last three years has your firm been debarred from bidding on, or completing, any government agency or public works construction contract for any reason?

NOTE: If there is a pending administrative or court action challenging a debarment, you need not include that debarment in responding to this question.

☐ Yes ☒ No

8. Has CAL OSHA assessed a total of three or more penalties against your firm for any "serious" or "willful" violation occurring on construction projects performed in Sacramento County at any time within the last three years?

NOTE: If there is a pending administrative or court action appealing a penalty assessment, you need not include that penalty assessment in responding to this question.

☐ Yes ☒ No

FOR CITY CLERK USE ONLY

RESOLUTION NO.: 2007-574

9. Answer either subsection A or B, as preferred:

A. In the last three years has your firm had a three year average Workers' Compensation experience modification rate exceeding 1.1?

☐ Yes ☐ No

OR

B. In the last three years has your firm had a three-year average incident rate for total lost workday cases exceeding 10?

NOTE: Incident rates represent the number of lost workday cases per 100 full-time workers and is to be calculated as: (N/EH) x 200,000, where

N	=	**number of lost workday cases (as defined by the U.S. Dept. of Labor, Bureau of Labor Statistics)**
EH	=	**total hours worked by all employees during the calendar year**
200,000	=	**base for 100 equivalent full-time working (working 40 hours per week, 50 weeks per year)**

☐ Yes ☒ No

10. In the past three years, has the federal EPA, Region IX or a California Air Quality Management District or Regional Water Quality Control Board assessed penalties three or more times, either against your firm, or against the project owner for a violation resulting in whole or in part from any action or omission by your firm on a project on which your firm was a contractor in Sacramento County?

NOTE: If there is a pending administrative or court action appealing a penalty assessment, you need not include that penalty assessment in responding to this question.

☐ Yes ☒ No

FOR CITY CLERK USE ONLY

RESOLUTION NO.: 2007-574

DATE ADOPTED: July 31, 2007

11. In the past three years, has the federal EPA, Region IX or a California Air Quality Management District or Regional Water Quality Control Board assessed a single penalty of $100,000 or more, either against your firm, or against the project owner for a violation resulting in whole or in part from any action or omission by your firm on a project on which your firm was the contractor in Sacramento County?

NOTE: **If there is a pending administrative or court action appealing a penalty assessment, you need not include that penalty assessment in responding to this question.**

☐ Yes ☒ No

12. In the past three years, have civil penalties been assessed against your firm pursuant to California Labor Code 1777.7 for violation of California public works apprenticeship requirements, three or more times?

NOTE: **If there is a pending administrative or court action appealing a penalty assessment, you need not include that penalty assessment in responding to this question.**

☐ Yes ☒ No

13. In the past three years, has a public agency in California withheld contract payments or assessed penalties against your firm for violation of public works prevailing wage requirements, three or more times?

NOTE: **If there is a pending administrative or court action appealing a withholding or penalty assessment, you need not include that withholding or penalty assessment in responding to this question.**

☐ Yes ☒ No

14. Has your firm been assessed penalties for violation of public works prevailing wage requirements in California, in an aggregate amount for the past three years of $50,000 or more?

NOTE: **If there is a pending administrative or court action appealing a penalty assessment, you need not include that penalty assessment in responding to this question.**

☐ Yes ☒ No

FOR CITY CLERK USE ONLY

RESOLUTION NO.: 2007-574

VERIFICATION AND SIGNATURE

I, the undersigned, certify and declare that I have read all the foregoing answers to this Minimum Qualifications Questionnaire, and know their contents. The matters stated in these Questionnaire answers are true of my own knowledge and belief, except as to those matters stated on information and belief, and as to those matters I believe them to be true. I declare under penalty of perjury under the laws of the State of California that the foregoing is true and correct.

Signed at 2492 ACORN HILL COURT, LISLE, IL 60532, on June 3, 2014.
(Location) (Date)

Signature: [signature]

Print name: Timothy A. Boos

Title: PRESIDENT

NOTE: If two or more entities submit a bid on a contract as a Joint Venture, each entity within the Joint Venture must submit a separate Minimum Qualifications Questionnaire.

FOR CITY CLERK USE ONLY

RESOLUTION NO.: 2007-574

DECLARATION OF COMPLIANCE
Equal Benefits Ordinance

BLUE FLAME CREW WEST, LLC
Name of Contractor

P.O. BOX 525 NAPERVILLE, IL 60566
Address

The above named contractor ("Contractor") hereby declares and agrees as follows:

1. I have read and understand the Requirements of the Non-Discrimination In Employee Benefits Code (the "Requirements") provided to me by the City of Sacramento ("City") in connection with the City's request for proposals or other solicitations for the performance of services, or for the provision of commodities, under a City contract or agreement ("Contract").

2. As a condition of receiving the City Contract, I agree to fully comply with the Requirements, as well as any additional requirements that may be specified in the City's Non-Discrimination in Employee Benefits Code codified at Chapter 3. 54 of the Sacramento City Code (the "Ordinance").

3. I understand, to the extent that such benefits are not preempted or prohibited by federal or state law, employee benefits covered by the Ordinance, are any of the following:

   a. Bereavement Leave
   b. Disability, life, and other types of insurance
   c. Family medical leave
   d. Health benefits
   e. Membership or membership discounts
   f. Moving expenses
   g. Pension and retirement benefits
   h. Vacation
   i. Travel benefits
   j. Any other benefit offered to employees

   I agree that should I offer any of the above listed employee benefits, that I will offer those benefits, without discrimination between employees with spouses and employees with domestic partners, and without discrimination between the spouses and domestic partners of such employees.

4. I understand that I will not be considered to be discriminating in the provision or application of employee benefits under the following conditions or circumstances:

DECLARATION OF COMPLIANCE
Equal Benefits Ordinance

a. In the event that the actual cost of providing a benefit to a domestic partner or spouse, exceeds the cost of providing the same benefit to a spouse or domestic partner of an employee, I will not be required to provide the benefit, nor shall it be deemed discriminatory, if I require the employee to pay the monetary difference in order to provide the benefit to the domestic partner or to the spouse.

b. In the event I am unable to provide a certain benefit, despite taking reasonable measures to do so, if I provide the employee with a cash equivalent, I will not be deemed to be discriminating in the application of that benefit.

c. If I provide employee benefits neither to employee's spouses nor to employee's domestic partners.

d. If I provide employee benefits to employees on a basis unrelated to marital or domestic partner status.

e. If I submit, to the Program Coordinator, written evidence of making reasonable efforts to end discrimination in employee benefits by implementing policies which are to be enacted before the first effective date after the first open enrollment process following the date the Contract is executed with the City.

   I understand that any delay in the implementation of such policies may not exceed one (1) year from the date the Contract is executed with the City, and applies only to those employee benefits for which an open enrollment process is applicable.

f. Until administrative steps can be taken to incorporate, in the infrastructure, nondiscrimination in employee benefits

   The time allotted for these administrative steps will apply only to those employee benefits for which administrative steps are necessary and may not exceed three (3) months from the date the Contract is executed with the City.

g. Until the expiration of a current collective bargaining agreement(s) where, in fact, employee benefits are governed by a collective bargaining agreement(s).

h. I take all reasonable measures to end discrimination in employee benefits by either requesting the union(s) involved agree to reopen the agreement(s) in order for me to take whatever steps are necessary to end discrimination in employee benefits or by my ending discrimination in employee benefits without reopening the collective bargaining agreement(s).

DECLARATION OF COMPLIANCE
Equal Benefits Ordinance

i. In the event I cannot end discrimination in employee benefits despite taking all reasonable measures to do so, I provide a cash equivalent to eligible employees for whom employee benefits (as listed previously), are not available.

Unless otherwise authorized in writing by the City Manager, I understand this cash equivalent must begin at the time the union(s) refuse to allow the collective bargaining agreement(s) to be reopened or no longer than three (3) months from the date the Contract is executed with the City.

5. I understand that failure to comply with the provisions of Section 4. (a) through 4. (i), above, will subject me to possible suspension and/or termination of this Contract for cause; repayment of any or all of the Contract amount disbursed by the City; debarment for future contracts until all penalties and restitution have been paid in full; deemed ineligible for future contracts for up to two (2) years; the imposition of a penalty, payable to the City, in the sum of $50.00 for each employee, for each calendar day during which the employee was discriminated against in violation of the provisions of the Ordinance.

6. I understand and do hereby agree to provide each current employee and, within ten (10) days of hire, each new employee, of their rights under the Ordinance. I further agree to maintain a copy of each such letter provided, in an appropriate file for possible inspection by an authorized representative of the City. I also agree to prominently display a poster informing each employee of these rights.

7. I understand that I have the right to request an exemption to the benefit provisions of the Ordinance when such a request is submitted to the Procurement Services Division, in writing with sufficient justification for resolution, prior to contract award.

   I further understand that the City may request a waiver or exemption to the provisions or requirements of the Ordinance, when only one contractor is available to enter into a contract or agreement to occupy and use City property on terms and conditions established by the City; when sole source conditions exist for goods, services, public project or improvements and related construction services; when there are no responsive bidders to the Ordinance requirements and the
   contract is for essential goods or services; when emergency conditions with public health and safety implications exist; or when the contract is for specialized legal services if in the best interest of the City.

8. In consideration of the foregoing, I shall defend, indemnify and hold harmless, the City, its officers and employees, against any claims, actions, damages, costs (including reasonable attorney fees), or other liabilities of any kind arising from any violation of the Requirements or of the Ordinance by
   me.

DECLARATION OF COMPLIANCE
Equal Benefits Ordinance

I declare under penalty of perjury under the laws of the State of California that the foregoing is true and correct, and that I am authorized to bind the Contractor to the provisions of this Declaration.

Signature of Authorized Representative

June 3, 2014
Date

Timothy L. Boos
Print Name

PRESIDENT
Title

YOUR RIGHTS UNDER THE CITY OF SACRAMENTO'S NON-DISCRIMINATION IN EMPLOYEE BENEFITS BY CITY CONTRACTORS ORDINANCE

On ..... (date), your employer (the "Employer") entered into a contract with the City of Sacramento (the "City") for ..... (contract details), and as a condition of that contract, agreed to abide by the requirements of the City's Non-Discrimination In Employee Benefits By City Contractors Ordinance (Sacramento City Code Section 3.54).

The Ordinance does not require the Employer to provide employee benefits. The Ordinance does require that if certain employee benefits are provided by the Employer, that those benefits be provided without discrimination between employees with spouses and employees with domestic partners, and without discrimination between the spouse or domestic partner of employees.

The Ordinance covers any employee working on the specific contract referenced above, but only for the period of time while those employees are actually working on this specific contract.

The included employee benefits are:

- Bereavement leave
- Disability, life and other types of insurance
- Family medical leave
- Health benefits
- Membership or membership discounts
- Moving expenses
- Pension and retirement benefits
- Vacation
- Travel benefits
- Any other benefits given to employees

(Employee Benefits does not include benefits that may be preempted by federal or state law.)

If you feel you have been discriminated or retaliated against by your employer in the terms and conditions of your application for employment, or in your employment, or in the application of these employee benefits, because of your status as an applicant or as an employee protected by the Ordinance, or because you reported a violation of the Ordinance, and after having exhausted all remedies with your employer,

You May . . .

- Submit a written complaint to the City of Sacramento, Contract Services Unit, containing the details of the alleged violation. The address is:

  City of Sacramento
  Contract Services Unit
  915 I St., 2nd Floor
  Sacramento, CA 95814

- Bring an action in the appropriate division of the Superior Court of the State of California against the Employer and obtain the following remedies:

  - Reinstatement, injunctive relief, compensatory damages and punitive damages

  - Reasonable attorney's fees and costs

YOUR RIGHTS UNDER THE CITY OF SACRAMENTO'S NON-DISCRIMINATION IN EMPLOYEE BENEFITS BY CITY CONTRACTORS ORDINANCE

If your employer provides employee benefits, they must be provided to those employees working on a City of Sacramento contract without discriminating between employees with spouses and employees with domestic partners.

The included employee benefits are:

- Bereavement leave
- Disability, life and other types of insurance
- Family medical leave
- Health benefits
- Membership or membership discounts
- Moving expenses
- Pension and retirement benefits
- Vacation
- Travel benefits
- Any other benefits given to employees

If you feel you have been discriminated against by your employer . . .

You May . . .

- Submit a written complaint to the City of Sacramento, Contract Services Unit, containing the details of the alleged violation. The address is:

  City of Sacramento
  Contract Services Unit
  915 I St., 2nd Floor
  Sacramento, CA 95814

- Bring an action in the appropriate division of the Superior Court of the State of California against the employer and obtain reinstatement, injunctive relief, compensatory damages, punitive damages and reasonable attorney's fees and costs.

Discrimination and Retaliation Prohibited.

If you feel you have been discriminated or retaliated against by your employer in the terms and conditions of your application for employment, or in your employment, because of your status as an applicant or as an employee protected by the Ordinance, or because you reported a violation of this Ordinance . . .

You May Also . . .

Submit a written complaint to the City of Sacramento, Contract Services Unit, at the same address, containing the details of the alleged violation.

REQUIREMENTS OF THE NON-DISCRIMINATION IN EMPLOYEE BENEFITS CODE

INTRODUCTION

The Sacramento Non-Discrimination In Employee Benefits Code (the "Ordinance"), codified as Sacramento City Code Chapter 3.54, prohibits City contractors from discriminating in the provision of employee benefits between employees with spouses and employees with domestic partners, and between the spouses and domestic partners of employees.

APPLICATION

The provisions of the Ordinance apply to any contract or agreement (as defined below), between a Contractor and the City of Sacramento, in an amount exceeding $100,000.00. The Ordinance applies to that portion of a contractor's operations that occur: (i) within the City of Sacramento; (ii) on real property outside the City of Sacramento if the property is owned by the City or if the City has a right to occupy the property; or (iii) at any location where a significant amount of work related to a City contract is being performed.

The Ordinance does not apply: to subcontractors or subcontracts of any Contractor or contractors; to transactions entered into pursuant to cooperative purchasing agreements approved by the Sacramento City Council; to legal contracts of other governmental jurisdictions or public agencies without separate competitive bidding by the City; where the requirements of the ordinance will violate or are inconsistent with the terms or conditions of a grant, subvention or agreement with a public agency or the instructions of an authorized representative of any such agency with respect to any such grant, subvention or agreement; to permits for excavation or street construction; or to agreements for the use of City right-of-way where a contracting utility has the power of eminent domain.

DEFINITIONS

As set forth in the Ordinance, the following definitions apply:

"Contract" means an agreement for public works or improvements to be performed, or for goods or services to be purchased or grants to be provided, at the expense of the City or to be paid out of moneys deposited in the treasury or out of the trust money under the control or collected by the City. "Contract" also means a written agreement for the exclusive use ("exclusive use" means the right to use or occupy real property to the exclusion of others, other than the right reserved by the fee owner) or occupancy of real property for a term exceeding 29 days in any calendar year, whether by singular or cumulative instrument, (i) for the operation or use by others of real property owned or controlled by the City for the operation of a business, social, or other establishment or organization, including leases, concessions, franchises and easements, or (ii) for the City's use or occupancy of real property owned by others, including leases, concessions, franchises and easements.

"Contract" shall not include: a revocable at-will use or encroachment permit for the use of or encroachment on City property regardless of the ultimate duration of such permit; excavation, street construction or street use permits; agreements for the use of City right-of-way where a contracting utility has the power of eminent domain; or agreements governing the use of City property that constitute a public forum for activities that are primarily for the purpose of espousing or advocating causes or ideas and that are generally protected by the First Amendment to the United States Constitution or that are primarily recreational in nature.

"Contractor" means any person or persons, firm partnership or corporation, company, or combination thereof, that enters into a Contract with the City. "Contractor" does not include a public entity.

"Domestic Partner" means any person who has a currently registered domestic partnership with a governmental entity pursuant to state or local law authorizing the registration.

"Employee Benefits" means bereavement leave; disability, life, and other types of insurance; family medical leave; health benefits; membership or membership discounts; moving expenses; pension and retirement benefits; vacation; travel benefits; and any other benefit given to employees. "Employee benefits" shall not include benefits to the extent that the application of the requirements of this chapter to such benefits may be preempted by federal or state.

CONTRACTOR'S OBLIGATION TO PROVIDE THE CITY WITH DOCUMENTATION AND INFORMATION

Contractor shall provide the City with documentation and information verifying its compliance with the requirements of the Ordinance within ten (10) days of receipt of a request from the City. Contractors shall keep accurate payroll records, showing, for each City Contract, the employee's name, address, Social Security number, work classification, straight time pay rate, overtime pay rate, overtime hours worked, status and exemptions, and benefits for each day and pay period that the employee works on the City Contract. Each request for payroll records shall be accompanied by an affidavit to be completed and returned by the Contractor, as stated, attesting that the information contained in the payroll records is true and correct, and that the Contractor has complied with the requirements of the Ordinance. A violation of the Ordinance or noncompliance with the requirements of the Ordinance shall constitute a breach of contract.

EMPLOYER COMPLIANCE CERTIFICATE AND NOTICE REQUIREMENTS

(a) All contractors seeking a Contract subject to the Ordinance shall submit a completed Declaration of Compliance Form (attachment "A"), signed by an authorized representative, with each proposal, bid or application. The Declaration of Compliance shall be made a part of the executed contract, and will be made available for public inspection and copying during regular business hours.

(b) The Contractor shall give each existing employee working directing on a City contract, and (at the time of hire), each new employee, a copy of the notification provided as attachment "B."

(c) Contractor shall post, in a place visible to all employees, a copy of the notice provided as attachment "C."