Meeting Date: **8/26/2014**

Report Type: Consent

Report ID: 2014-00577

City of SACRAMENTO **14**

City Council Report
915 I Street, 1st Floor
www.CityofSacramento.org

Title: Award Contract for Oak Park and Colonial Heights Water Improvement Project (Z14010069) (Reviewed 08/19/2014)

Location: Districts 5 and 6

Recommendation: Pass a Motion 1) approving the contract plans and specifications for the Oak Park and Colonial Heights Water Improvement project; and 2) awarding the contract to Teichert Construction for an amount not-to-exceed $3,822,670.

Contact: Bill Busath, Manager, Engineering and Water Resources, (916) 808-1434; Dan Sherry, Supervising Engineering, Engineering and Water Resources, (916) 808-1419, Department of Utilities

Presenter: None

Department: Department Of Utilities

Division: Engineering & Water Resources

Dept ID: 14001311

Attachments:

1-Description/Analysis

2-Background

3-Location Map

4-Agreement

City Attorney Review

Approved as to Form
Joe Robinson
8/14/2014 4:35:53 PM

Approvals/Acknowledgements

Department Director or Designee: Dave Brent - 8/11/2014 3:03:14 PM

Back to Report Table of Contents

Description/Analysis

Issue Detail: The project replaces approximately 1,310 lineal feet of existing water main and places approximately 3,040 meters on existing water services.

Policy Considerations: This report's recommendation is consistent with the City's General Plan goal of funding critical water infrastructure in need of improvements and meeting the State's requirement of installing water meters citywide by 2025. The requested action is in conformance with City Code Chapter 3.60, Articles I and III, which provide that the City Council may award competitively bid contracts to the lowest responsible bidder.

Economic Impacts: The project is expected to create 15.3 total jobs (8.8 direct jobs and 6.5 jobs through indirect and induced activities), and create $2,360,250 in total economic output ($1,487,684 of direct output and another $872,566 of output through indirect and induced activities).

The indicated economic impacts are estimates calculated using a calculation tool developed by the Center for Strategic Economic Research (CSER). CSER utilized the IMPLAN input-output model (2009 coefficients) to quantify the economic impacts of a hypothetical $1 million of spending in various construction categories within the City of Sacramento in an average one-year period. Actual impacts could differ significantly from the estimates and neither the City of Sacramento nor CSER shall be held responsible for consequences resulting from such differences.

Environmental Considerations: The Community Development Department, Environmental Planning Services Division, has reviewed the proposed project and has determined that it is categorically exempt from the California Environmental Quality Act (CEQA), under State Class 1 and 3 and Section numbers 15301 and 15303 of the CEQA Guidelines, replacement of existing utility system involving negligible expansion of capacity and the installation of new equipment.

Sustainability: The project is consistent with the City's Sustainability Master Plan by improving infrastructure reliability, which will reduce energy-intensive maintenance efforts.

Commission/Committee Action: Not applicable.

Rationale for Recommendation: The project was advertised and three bids were opened on July 9, 2014. Teichert Construction is the lowest responsible bidder with a bid of $3,822,670. The Engineer's estimate was $4,200,000.

Bid results are as follows:

Teichert Construction	$3,822,670
Marques Pipelines, Inc.	$3,895,930
Florez Paving	$4,558,400

Financial Considerations: The construction contract is for an amount not to exceed $3,822,670, and the total project cost is estimated to be $4,750,000. There are sufficient water bond funds in the Oak Park and Colonial Manor Water Improvement Project (Z14010069) budget to award the construction contract and complete the project.

Local Business Enterprise (LBE): This project includes a minimum participation level of 5% for local business enterprises (LBEs) as required by Ordinance 2013-0036 and Resolution 2013-0373 relating to LBE participation goals and policies, adopted by the City Council on November 19, 2013.

The lowest responsible bidder, Teichert Construction, exceeds the LBE minimum participation level with a participation level of 100.0%.

Back to Report Table of Contents

Background

California State Assembly Bill 2572 (AB2572) was signed on September 24, 2004, requiring the metering of all residential and commercial water service connections by the year 2025.

The Oak Park and Colonial Heights Water Improvements project contributes to the City's efforts to meet the requirements of AB2572 by installing water meters at residential and commercial properties within Council Districts 5 and 6.

This project will retrofit approximately 3,040 water service connections with water meters. In addition, another 43 unmetered water service connections currently served by water mains in backyard easements, will be replaced with water services connected to 1,310 linear feet of new water mains constructed in the public right of way. These 43 services will also have meters installed as part of this project. The scope of the project also includes placement of fire hydrants and restoration of surface material. All substandard water services encountered will be replaced to current standards.

Back to Report Table of Contents

LOCATION MAP

Oak Park & Colonia Manor Water Improvements

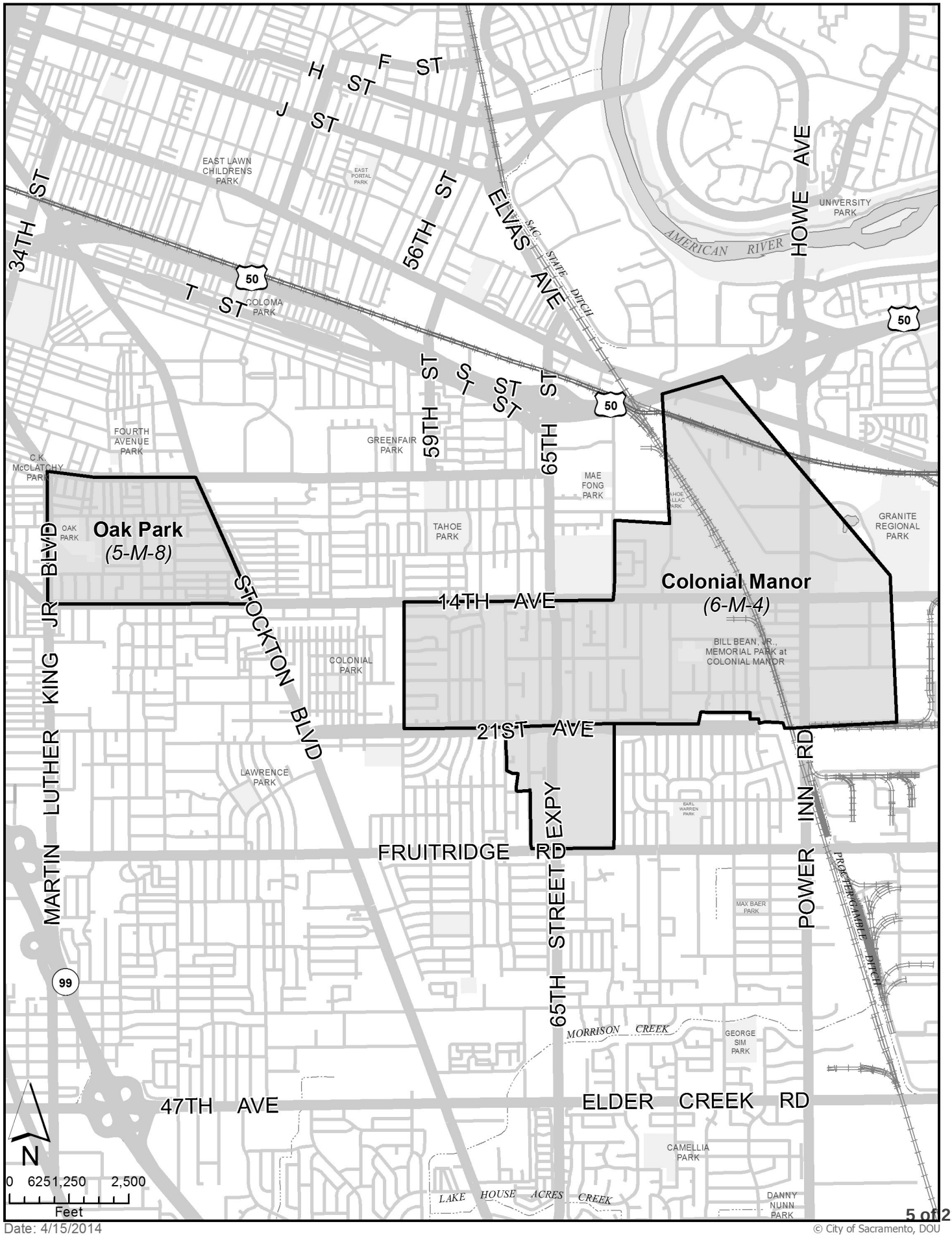

Date: 4/15/2014

© City of Sacramento, DOU

Back to Report Table of Contents

City of SACRAMENTO
Department of Utilities

ENGINEERING SERVICES DIVISON

CONTRACT SPECIFICATIONS
FOR

OAK PARK & COLONIAL HEIGHTS WATER IMPROVEMENTS

PN: Z14010069

B15141321002

Engineer's Estimate: 4,200,000

For Pre-Bid Information Call:

Sonia Lopez
Associate Engineer
(916) 808-1456

No Separate Plans

Bid to be received before 2:00 PM
July 9, 2014
City Hall, Office of the City Clerk
915 I Street, 5th Floor, Public Counter
Sacramento, CA 95814

LBE PROGRAM PARTICIPATION

For information on meeting the City of Sacramento's Local Business Enterprise (LBE) project goals, please contact Veronica A. Smith at (916) 808-1046, or visit the City of Sacramento's small business web site at: http://www.cityofsacramento.org/econdev/business-open/small-business-certification.cfm

OAK PARK & COLONIAL HEIGHTS WATER IMPROVEMENTS
TABLE OF CONTENTS

INVITATION TO BID ..... Page 1 of 2

LBE INFORMATION ..... Page 1 of 1

NOTICE TO CONTRACTORS ..... Page 1 of 1

PROPOSAL FORMS (To be submitted by all Bidders as the Bid Page)

Sealed Proposal ..... Page 1 of 3

Bid Proposal Guarantee ..... Page 1 of 1

Subcontractor and LBE Participation Verification ..... Page 1 of 1

Drug-Free Workplace Policy and Affidavit ..... Page 1 of 1

Minimum Qualifications Questionnaire ..... Page 1 of 6

Requirements of the Non-Discrimination in Employee Benefits Code ..... Page 1 of 8

Construction and Demolition (C&D) Debris Recycling Requirements ..... Page 1 of 2

C & D Waste Management Plan ..... Page 1 of 2

C&D Debris Haulers & Facilities ..... Page 1 of 1

C&D Debris Waste Log ..... Page 1 of 1

LBE Requirements (City Contracts no Federal Funds Used) ..... Page 1 of 4

CONTRACT FORMS (Only for successful Bidder)

Worker's Compensation Insurance Certification ..... Page 1 of 1

Agreement ..... Page 1 of 14

Bonds ..... Page 1 of 6

- Performance Bond
- Payment Bond
-

CALIFORNIA LABOR CODE RELATING TO APPRENTICES ..... Page 1 of 1

TAX FORMS (REQUIRED UPON AWARD)

W-9 ..... Page 1 of 1

CA Form 590 ..... Page 1 of 1

SPECIAL PROVISIONS

LBE INFORMATION

The City of Sacramento's Local Business Development (LBE) program establishes an annual local business enterprise (LBE) participation goal for City contracts, and authorizes City departments to require minimum LBE participation levels in individual contracts. Under City Code section 3.60.270, all bidding contractors must meet or exceed participation goals established for this project in order to qualify as a responsible bidder.

For information on meeting the City of Sacramento's Local Business Enterprise (LBE) project goals, please contact Veronica A. Smith at (916) 808-1046, or visit the City of Sacramento's small business web site at: http://www.cityofsacramento.org/econdev/business-open/small-business-certification.cfm

NOTICE TO CONTRACTORS

CITY OF SACRAMENTO

Sealed Proposals will be received by the City Clerk of the City of Sacramento at the Office of the City Clerk, City Hall, located at 915 I Street, 5th Floor, Public Counter, up to the hour of 2:00 p.m. on **July 9, 2014** and opened at and read after 2:00 p.m. on **July 9, 2014**, or as soon thereafter as business allows, in the Hearing Room, 2nd Floor Room, in Historic City Hall, for construction of:

OAK PARK & COLONIAL HEIGHTS WATER IMPROVEMENTS
(**PN: Z14010069) (B15141321002)**

as set forth in the Construction Documents.

Proposals received and work performed thereunder shall comply with the requirement of Chapter 3 of the Sacramento City Code. Each Bid Proposal shall be accompanied by bid security of at least 10% of the sum the Bid Proposal. The right to reject proposals or to waive any error or omission in any Bid Proposal received is reserved by the City. Signed proposals shall be submitted on the printed forms contained herein and enclosed in an envelope marked:

SEALED PROPOSAL FOR
OAK PARK & COLONIAL HEIGHTS WATER IMPROVEMENTS
(PN: Z14010069) (B15141321002)

LBE CERTIFICATIONS ARE DUE BY THE CLOSE OF BUSINESS TWO DAYS AFTER BID OPENING to:
Sonia Lopez, Department of Utilities, Engineering Services Division
1395 35th Avenue, Sacramento, CA 95822
Phone: (916) 808-1456 / Fax: (916) 808-1497/Email: SLopez@cityofsacramento.org

You can view and download the plans and Contract Documents from:

PLANET BIDS
http://www.planetbids.com/portal/portal.cfm?CompanyID=15300#

Subcontractors shall comply with the rates of wages currently established by the Director of Industrial Relations under provisions of Sections 1773 of the Labor Code of the State of California, a copy of which is on file in the office of the City Clerk. In accordance with Sacramento City Code Section 3.60.180 and Section 1771.5 of the California Labor Code, the payment of the general prevailing rate of per diem wages or the general prevailing rate of per diem wages for holiday and overtime is not required for any Public Construction project of $25,000 or less, or Public Maintenance project of $15,000 or less. The City of Sacramento has an approved Labor Compliance Program. **The City uses an electronic system for the submission of Labor Compliance Reports, which became effective May 1, 2007.** Each contractor and every lower-tier subcontractor submits certified payrolls and labor compliance documentation electronically at the discretion of and in the manner specified by the City of Sacramento.

Electronic submittal is via a web-based system, accessed on the World Wide Web by a web browser. Each contractor and subcontractor is given a Log On identification and password to access the City of Sacramento's reporting system.

Use of the system may entail additional data entry of weekly payroll information including; employee identification, labor classification, total hours worked and hours worked on this project, wage and benefit rates paid, etc. The contractor's payroll and accounting software might be capable of generating a 'comma delimited file' that will interface with the software.

Disseminate these provisions to every lower-tier subcontractor and vendor required to provide labor compliance documentation.

All questions regarding this Labor Compliance Program should be directed to the department's contracts staff or the Labor Compliance Officer at (916) 808-4011.

Pursuant to Sacramento City Code Section 3.60.250, any Agreement awarded pursuant to this Invitation to Bid shall contain a provision permitting the substitution of securities for any monies withheld to ensure performance under the Agreement. The terms of such provisions shall be according to the requirements and the form required by the City.

Bid protests must be filled and maintained in accordance with the provisions of Sections 3.60.460 through 3.60.560 of the Sacramento City Code. Bid protests that do not comply with Sections 3.60.460 through 3.60.560 of the Sacramento City Code shall be invalid and shall not be considered. A bid protest fee of $750.00 is required at the time of filing to be considered valid in accordance with City of Sacramento Resolution No. 2003-231 dated April 29, 2003. As used herein, the term "bid protest" includes any bid protest that (1) claims that one or more bidders on this contract should be disqualified or rejected for any reason, or (2) contests a City staff recommendation to award this contract to a particular bidder, or (3) contests a City staff recommendation to disqualify or reject one or more bidders on this contract. A copy of Sections 3.60.460 through 3.60.560 of the Sacramento City Code may be obtained from the Project Manager, or from the City Clerk, located at 915 I Street, 5th Floor, Sacramento, CA 95814.

THE FOLLOWING DOCUMENTS

ARE TO BE COMPLETED AND

SUBMITTED WITH THE BID PACKAGE

Contractor's Name: _____
(Please print)

CITY OF SACRAMENTO

SEALED PROPOSAL

(MUST BE SIGNED BY BIDDER)

The Sealed Proposal will be received not later than **July 9, 2014**, at the Office of the City Clerk, New City Hall, at 915 I Street, 5th Floor, Public Counter, Sacramento, California and opened at 2:00 PM, or as soon thereafter as business allows, on **July 9, 2014**, by the Office of the City Clerk, 915 I Street, Historic City Hall, 2nd Floor, Hearing Room, Sacramento, California.

TO THE HONORABLE CITY COUNCIL:

The undersigned hereby proposes and agrees to furnish any and all required labor, material, transportation, and services for

OAK PARK & COLONIAL HEIGHTS WATER IMPROVEMENTS
(PN: Z14010069) (B15141321002)

in the City and County of Sacramento, California.

TOTAL BID: _____ ($_____).

The work herein described is to be performed in strict conformity with the Plans, City of Sacramento Standard Specifications (Resolution No. 89-216) and these Special Provisions, all as on file in the Office of the City Clerk, at the following unit prices.

Item No.	Description	Estimated Quantity	Unit	Unit Price	Total
1	Mobilization	1	LS	$_____	$_____
2	Construction Photographs	1	LS	$_____	$_____
3	8-Inch Water Main to Place	1310	LF	$_____	$_____
4	8-Inch Gate Valve to Install	12	EA	$_____	$_____
5	6-Inch Gate Valve to Install	6	EA	$_____	$_____
6	Blow-Off Valve to Install	2	EA	$_____	$_____
7	Fire Hydrant to Install	2	EA	$_____	$_____
8	Connection to Existing Water System	7	EA	$_____	$_____
9	Meter to Install	17	EA	$_____	$_____
10	Water Service to Install	17	EA	$_____	$_____
11	Meter Retrofit of 1-Inch Water Service	2984	EA	$_____	$_____
12	Meter Retrofit of 1½ -Inch Water Service	27	EA	$_____	$_____
13	Meter Retrofit of 2-Inch Water Service	10	EA	$_____	$_____
14	Meter Retrofit of 4-Inch Water Service	1	EA	$_____	$_____
15	Meter Retrofit of 6-Inch Water Service	1	EA	$_____	$_____
16	Hybrid Water Service to Install (Front Hose Bib)	19	EA	$_____	$_____
17	Hybrid Water Service to Install (Rear Hose Bib)	5	EA	$_____	$_____
18	Substandard Water Service to Replace	600	EA	$_____	$_____

Item No.	Description	Estimated Quantity	Unit	Unit Price	Total
19	Water Mains & Fittings to Abandon	1	LS		
20	Water Service to Abandon	8	EA	$_____	$_____
21	Concrete to Replace	2500	SF	$_____	$_____
22	Asphaltic Concrete to Replace	1500	SF	$_____	$_____
23	Unsuitable Material to Replace	50	TON	$_____	$_____

TOTAL BID: $_____

Bring this amount forward to previous page

If awarded the contract, the undersigned shall execute said contract and furnish the necessary bonds within ten (10) days after the notice of award of said contract and begin work within fifteen (15) days after the signing of the contract by the Contractor and the City or the Notice to Proceed has been prepared, whichever is applicable.

In determining the amount bid by each bidder, City shall disregard mathematical errors in addition, subtraction, multiplication and division that appear obvious on the face of the Proposal. When such a mathematical error appears on the Proposal, the City shall have the right to correct such error and to compute the total amount bid by said bidder on the basis of the corrected figure or figures.

When the unit price of an item is required to be set forth in the Proposal, and the total for the item set forth separately does not agree with a figure derived by multiplying the item unit price times the Engineer's estimate of the quantity of work to be performed for said item, the item unit price shall prevail over the sum set forth as the total for the item unless, in the sole discretion of the City, such a procedure would be inconsistent with the policy of the City's bidding procedures. The total paid for each such item of work shall be based upon the item unit price and not the total price.

Should the Proposal contain only a total price for an item and the item unit price is omitted, the City shall determine the item unit price by dividing the total price of the item by the Engineer's estimate of the quantity of work to be performed for the item of work.

If the Proposal contains neither the item price nor the total price for the item, then it shall be deemed incomplete and the Proposal shall be disregarded.

It is understood that this bid is based upon completion of the work within a period **of one hundred seventy (170) working days** commencing on the date specified in the Notice to Proceed.

The amount of liquidated damages to be paid by the Contractor for failure to complete the work by the completion date (as extended, if applicable) shall be **five hundred dollars ($500.00) <u>for each calendar day</u>**, continuing to the time at which the work is completed. Such amount is the actual cash value agreed upon as the loss to the City resulting from the default of the Contractor.

The undersigned represents and warrants that he/she has examined the location of the proposed work and is familiar with the conditions at the place where the work is to be done. The undersigned further represents that he/she has reviewed and understands the Plans, Special Provisions, and other contract documents, and the undersigned is satisfied with all conditions for the performance of the work.

Additionally, the undersigned shall include written documentation with the Sealed Proposal of previous satisfactory experience in installation of water main pipeline, in accordance with the following:

- **The undersigned shall provide documentation of experience in up to two (2) projects of similar size and scope for the placement of 5,000 feet of pipe and minimum of 500 meter retrofits. The experience can be combined among the two (2) projects. The work shall have been performed by the undersigned for a municipality or other public agency within the last five (5) years. The documentation for each project shall describe the work performed, including the size and length of pipeline installed, the type of water main material installed, the contract amount and duration, and the time period of performance, and shall include the name, address and telephone number of the owner agency or municipality. The documentation also shall include the name of a contact person for each owner who is familiar with the work performed. The above documentation shall be included with the Sealed Proposal.**

- **A Sealed Proposal that does not include the above required documentation may be rejected as non-responsive.**

Please note that information included in the above documentation and/or obtained from such other owner agency or municipality or from another source regarding the bidder's performance on another public project also may be used by the City in determining whether the bidder is a responsible bidder**.**
The undersigned has carefully checked all of the above figures and understands that the City of Sacramento will not be responsible for any errors or omissions on the part of the undersigned in making up this bid.

This proposal shall not be withdrawn for the time periods specified in Section 3-2 of the City of Sacramento Standard Specifications for award of contract to respective low bidders. This proposal is submitted in accordance with Chapter 3.60 of the Sacramento City Code and Sections 1, 2, and 3 of the City of Sacramento Standard Specifications.

In accordance with Standard Specification Section 3-2, the City shall award this contract to the lowest responsible bidder, if such award is made, within forty-five (45) working days after opening of the Proposals. The City reserves the right to reject any and all bids.

BID DEPOSIT ENCLOSED IN THE FOLLOWING FORM:

$_____not less than ten (10) percent of amount bid.

____CERTIFIED CHECK

____MONEY ORDER

____CASHIERS'S CHECK

____BID BOND

FOR CITY USE ONLY

TYPE OF DEPOSIT

- ☐ Bid Bond
- ☐ Cashier/Certified Check
- ☐ Other_____

Reviewer's Initials: _____

CONTRACTOR

Addendum No. 1 _____ _____

Addendum No. 2 _____ By:_____
(Signature)

Addendum No. 3 _____ Title:_____

Addendum No. 4 _____ Address:_____
No PO Box – Physical Address ONLY

_____
City STATE ZIIP Code

Telephone No. _____

Fax No. _____

Email _____

(Federal Tax ID # or Social Security #)
Under penalty of perjury, I certify that the Taxpayer Identification Number and all other information provided here are correct.

_____

Valid Contractor's License No. _____, Classification _____ is held by the bidder.

Expiration date _____. Representation made herein are true and correct under penalty or perjury

PN: Z14010069 (B15141321002)

KNOW ALL MEN BY THESE PRESENTS,

That we, _____

as Principal, and _____

a corporation duly organized under the laws of the State of _____and duly licensed to become sole surety on bonds required or authorized by the State of California, as Surety, are held and firmly bound unto the City of Sacramento, hereinafter called the City, in the penal sum of ten percent (10%) of the (BASE OR LUMP SUM) Proposal of the Principal above named, or other amount as set forth in the Invitation to Bidders, submitted by said Principal to the City for the Work described below, for the payment of which sum in lawful money of the United States, well and truly to be made, we bind ourselves, our heirs, executors, administrators and successors, jointly and severally, firmly by these presents.

THE CONDITION OF THIS OBLIGATION IS SUCH

That whereas the Principal has submitted the above mentioned proposal to the City, for which Proposals are to be opened by the Office of the City Clerk, Historic City Hall, Hearing Room, 2nd Floor, 915 I Street, Sacramento, California, on **July 9, 2014**, for the Work specifically described as follows:

OAK PARK & COLONIAL HEIGHTS WATER IMPROVEMENTS
(PN: Z14010069) (B15141321002)

NOW, THEREFORE, if the aforesaid Principal is award the Agreement and within the time and manner required under the Contract Documents, enters into a written Agreement, in the prescribed form, in accordance with the Proposal, and files two (2) bonds with the City, one to guarantee faithful performance and the other to guarantee payment for labor and materials, and files the required insurance policies with the City, all as required by the Contract Documents or by law, then the obligation shall be null and void; otherwise it shall be and remain in full force and effect.

In the event suit is brought upon this bond by the Obligee and judgment is recovered, the Surety shall pay all costs incurred by the Obligee in such suit, including a reasonable attorney's fee to be fixed by the court, which sums shall be additional to the principal amount of this bond.

IN WITNESS THEREOF, We have hereunto set our hands and seal this _____day of _____, 2014.

_____
PRINCIPAL Seal

By: _____

_____
Title

_____
SURETY Seal

By _____

_____
Title

_____
Agent Name and Address

_____

_____
Agent Phone #

_____
Surety Phone #

_____
California License #

City of SACRAMENTO

Subcontractor and Local Business Enterprise (LBE) Participation Verification Form For Public Projects Over $100,000

THIS FORM MUST BE SUBMITTED WITH THE SEALED BID PROPOSAL

To be eligible for award of this contract, the bidder shall list all subcontractors who perform work, labor, or render service in an amount in excess of one-half of 1 percent of the total bid amount. In the case of bids for the construction of streets and highways, including bridges, subcontractors whose subcontract value exceeds one-half of 1 percent of the total bid or ten thousand dollars ($10,000), whichever is greater, shall be listed.
In addition, the bidder shall list any business entity used to attain the 5% LBE requirement. Estimated dollar values shall be provided for **all** work/services/supplies listed. The inclusion of false information or the omission of required information will render the bid non-responsive.

Prime Contractor Name: _____ Address: _____
Bid Amount: _____ Is Prime Contractor a LBE? Yes____ No____ Total LBE Participation %: _____ Date: _____

Business Entity Name/Address/Contact Person/Telephone/Email	Sub-contractor license number	Indicate LBE (subject to verification)	Describe Exact Type of Work/Services/Supplies to be provided to complete contract	Estimated Dollar Value of Work/Services/Supplies to be Performed or Provided	Percentage of Prime Contract	For Office Use Only (calculation)

I hereby certify that each subcontractor listed on this Subcontractor and LBE Participation Verification Form has been notified that it has been listed and has consented in writing to its name being submitted for this contract. Additionally, I certify that I shall notify each business entity listed on this Form, in writing, if the award is granted to my firm, and I shall make all documentation relevant to subcontractor and LBE participation available to the City of Sacramento upon request. I further certify that all information contained in this Form is true and correct and I acknowledge that the City will rely on the truth of the information in awarding the contract.
PRINCIPAL OF FIRM:

_____ _____ _____
(Signature) (Title) (Date)

COPY AND ATTACH ADDITIONAL SHEETS AS NECESSARY

Form Updated 2/3/2014

DRUG-FREE WORKPLACE POLICY AND AFFIDAVIT

BID MAY BE DECLARED NONRESPONSIVE IF THIS FORM (COMPLETED) IS NOT ATTACHED.
Pursuant to City Council Resolution CC90-498 dated 6/26/90 the following is required.

The undersigned contractor certifies that it and all subcontractors performing under this contract will provide a drug-free workplace by:

1. Publishing a "Drug-Free Workplace" statement notifying employees that the unlawful manufacture, distribution, dispensing, possession or use of a controlled substance is prohibited in the contractor's workplace and specifying the actions that will be taken against employees for violations of such prohibition.

2. Establishing a Drug-Free Awareness Program to inform employees about:

   a. The dangers of drug abuse in the workplace.
   b. The contractor's policy of maintaining a drug-free workplace.
   c. Any available drug counseling, rehabilitation, and employee assistance program.
   d. The penalties that may be imposed upon employees for drug abuse violations occurring in the workplace.

3. Notify employees that as a condition of employment under this contract, employees will be expected to:

   a. Abide by the terms of the statement.
   b. Notify the employer of any criminal drug statute conviction for a violation occurring in the workplace.

4. Making it a requirement that each employee to be engaged in the performance of the contract be given a copy on the "Drug-Free Workplace" statement.

5. Taking one of the following appropriate actions, within thirty (30) days of receiving notice from an employee or otherwise receiving such notice, that said employee has received a drug conviction for a violation occurring in the workplace:

   a. Taking appropriate disciplinary action against such an employee, up to and including termination; or
   b. Requiring such employee to participate satisfactorily in a drug abuse assistance or rehabilitation program approved for such purposes by a federal, state, or local health, law enforcement or other appropriate agency.

* I certify that no person employed by this company, corporation, or business has been convicted of any criminal drug statute violation on any job site or project where this company, corporation, or business was performing work within three years of the date of my signature below.

EXCEPTION:

_____

Date Violation Type Place of Occurrence

If additional space is required use back of this form.

*The above statement will also be incorporated as a part of each subcontract agreement for any and all subcontractors selected for performance on this project.

IN THE EVENT THIS COMPANY, CORPORATION, OR BUSINESS IS AWARDED THIS CONSTRUCTION CONTRACT, AS A RESULT OF THIS BID; THE CONTRACTOR WITH HIS/HER SIGNATURE REPRESENTS TO THE CITY THAT THE INFORMATION DISCLOSED IN THIS DOCUMENT IS COMPLETE AND ACCURATE. IT IS UNDERSTOOD AND AGREED THAT FALSE CERTIFICATION IS SUBJECT TO IMMEDIATE TERMINATION BY THE CITY.

The Representations Made Herein On This Document Are Made Under Penalty Of Perjury.

CONTRACTOR'S NAME:_____

BY:_____Date:_____

Signature Title

Effects of violations: a. Suspension of payments under this contract. b. Suspension or termination of the contract. c. Suspension or debarment of the contractor from receiving any contract from the City of Sacramento for a period not to exceed five years.
FM 681 7/10/9

MINIMUM QUALIFICATIONS QUESTIONNAIRE

Sacramento City Code Section 3.60.020 authorizes the Sacramento City Council to adopt standard minimum qualifications for bidders on competitively bid public works construction projects, and requires, among other provisions, that a bidder meet such minimum qualifications at the time of bid opening in order to bid. On July 31, 2007, the City Council adopted Resolution No. 2007-574 establishing these standard minimum qualifications. Pursuant to City Code section 3.60.020, a bidder failing to meet these minimum qualifications at the time of bid opening shall not be considered a responsible bidder for purposes of bidding on the subject project.

All bidders must demonstrate compliance with the minimum qualifications established by Resolution No. 2007-574 by completing all of the questions contained in this questionnaire. Bidder responses shall be limited to those operating business units, offices, branches and/or subsidiary divisions of the bidder that will be involved with the performance of any project work if awarded the contract**.** If a bidder answers "yes" to any single question, fails to submit a fully completed questionnaire, or submits false information, this will result in a determination that the minimum qualifications are not met, and the bidder shall not be considered a qualified bidder for purposes of bidding on this contract. If two or more entities submit a bid on a contract as a Joint Venture, each entity within the Joint Venture must separately meet these minimum qualifications for the Joint Venture to be considered a qualified bidder.

The City of Sacramento ("City") shall make its determination on the basis of the submitted questionnaire, as well as any relevant information that is obtained from others or as a result of investigation by the City. While it is the intent of this questionnaire to assist the City in determining whether bidders possess the minimum qualifications necessary to submit bids on the City's competitively bid public works construction contracts, the fact that a bidder submits a questionnaire demonstrating that it meets these minimum qualifications shall not in any way limit or affect the City's ability to: (1) review other information contained in the bid submitted by the bidder, and additional relevant information, and determine whether the contractor is a responsive and/or responsible bidder; or (2) establish pre-qualification requirements for a specific contract or contracts.

By submitting this questionnaire, the bidder consents to the disclosure of its questionnaire answers: (i) to third parties for purposes of verification and investigation; (ii) in connection with any protest, challenge or appeal of any action taken by the City; and (iii) as required by any law or regulation, including without limitation the California Public Records Act (Calif. Gov't Code sections 6250 et seq.). Each questionnaire must be signed under penalty of perjury in the manner designated at the end of the form, by an individual who has the legal authority to bind the bidder submitting the questionnaire. If any information provided by a bidder becomes inaccurate, the bidder shall immediately notify the City and provide updated accurate information in writing, under penalty of perjury.

QUESTIONNAIRE

NOTICE: **For firms that maintain other operating business units, offices, branches and/or subsidiary divisions that will not be involved with the performance of any project work if the firm is awarded the contract, references hereafter to "your firm" shall mean only those operating business units, offices, branches and/or subsidiary divisions that will be involved with the performance of any project work.**

All of the following questions regarding "your firm" refer to the firm (corporation, partnership or sole proprietor) submitting this questionnaire, as well as any firm(s) with which any of your firm's owners, officers, or partners are or have been associated as an owner, officer, partner or similar position within the last five years

The firm submitting this questionnaire shall not be considered a responsible bidder if the answer to any of these questions is "yes", or if the firm submits a questionnaire that is not fully completed or contains false information.

1. **Classification & Expiration Date(s) of California** Contractor's License Number(s) held by firm:

   _____

2. Has a contractor's license held by your firm and/or any owner, officer or partner of your firm been revoked at anytime in the last five years?

   ☐ Yes ☐ No

3. Within the last five years, has a surety firm completed a contract on your firm's behalf, or paid for completion of a contract to which your firm was a party, because your firm was considered to be in default or was terminated for cause by the project owner?

   ☐ Yes ☐ No

4. At the time of submitting this minimum qualifications questionnaire, is your firm ineligible to bid on or be awarded a public works contract, or perform as a subcontractor on a public works contract, pursuant to either California Labor Code section 1777.1 (prevailing wage violations) or Labor Code section 1777.7 (apprenticeship violations)?

   ☐ Yes ☐ No

5. At any time during the last five years, has your firm, or any of its owners, officers or partners been convicted of a crime involving the awarding of a contract for a government construction project, or the bidding or performance of a government contract?

   ☐ Yes ☐ No

6. Answer either subsection A or B, as applicable:

A. Your firm has completed three or more government construction contracts in Sacramento County within the last five years: Within those five years, has your firm been assessed liquidated damages on three or more government construction contracts in Sacramento County for failure to complete contract work on time?

NOTE: If there is a pending administrative or court action challenging the assessment of liquidated damages on a government contract within the last five years, you need not include that contract in responding to this question.

☐ Yes ☐ No ☐ Not applicable

OR

B. Your firm has not completed at least three government construction contracts in Sacramento County within the last five years: Within the last three years, has your firm been assessed liquidated damages on three or more government construction contracts for failure to complete contract work on time?

NOTE: If there is a pending administrative or court action challenging an assessment of liquidated damages on a government contract within the last three years, you need not include that contract in responding to this question.

☐ Yes ☐ No ☐ Not applicable

7. In the last three years has your firm been debarred from bidding on, or completing, any government agency or public works construction contract for any reason?

NOTE: If there is a pending administrative or court action challenging a debarment, you need not include that debarment in responding to this question.

☐ Yes ☐ No

8. Has CAL OSHA assessed a total of three or more penalties against your firm for any "serious" or "willful" violation occurring on construction projects performed in Sacramento County at any time within the last three years?

NOTE: If there is a pending administrative or court action appealing a penalty assessment, you need not include that penalty assessment in responding to this question.

☐ Yes ☐ No

9. Answer <u>either</u> subsection A or B, as preferred:

A. In the last three years has your firm had a three year average Workers' Compensation experience modification rate exceeding 1.1?

☐ Yes ☐ No

OR

B. In the last three years has your firm had a three-year average incident rate for total lost workday cases exceeding 10?

NOTE: Incident rates represent the number of lost workday cases per 100 full-time workers and is to be calculated as: (N/EH) x 200,000, where

N	**=**	**number of lost workday cases (as defined by the U.S. Dept. of Labor, Bureau of Labor Statistics)**
EH	**=**	**total hours worked by all employees during the calendar year**
200,000	**=**	**base for 100 equivalent full-time working (working 40 hours per week, 50 weeks per year)**

☐ Yes ☐ No

10. In the past three years, has the federal EPA, Region IX or a California Air Quality Management District or Regional Water Quality Control Board assessed penalties three or more times, either against your firm, or against the project owner for a violation resulting in whole or in part from any action or omission by your firm on a project on which your firm was a contractor in Sacramento County?

NOTE: If there is a pending administrative or court action appealing a penalty assessment, you need not include that penalty assessment in responding to this question.

☐ Yes ☐ No

11. In the past three years, has the federal EPA, Region IX or a California Air Quality Management District or Regional Water Quality Control Board assessed a single penalty of $100,000 or more, either against your firm, or against the project owner for a violation resulting in whole or in part from any action or omission by your firm on a project on which your firm was the contractor in Sacramento County?

NOTE: If there is a pending administrative or court action appealing a penalty assessment, you need not include that penalty assessment in responding to this question.

☐ Yes ☐ No

12. In the past three years, have civil penalties been assessed against your firm pursuant to California Labor Code 1777.7 for violation of California public works apprenticeship requirements, three or more times?

NOTE: If there is a pending administrative or court action appealing a penalty assessment, you need not include that penalty assessment in responding to this question.

☐ Yes ☐ No

13. In the past three years, has a public agency in California withheld contract payments or assessed penalties against your firm for violation of public works prevailing wage requirements, three or more times?

NOTE: If there is a pending administrative or court action appealing a withholding or penalty assessment, you need not include that withholding or penalty assessment in responding to this question.

☐ Yes ☐ No

14. Has your firm been assessed penalties for violation of public works prevailing wage requirements in California, in an aggregate amount for the past three years of $50,000 or more?

NOTE: If there is a pending administrative or court action appealing a penalty assessment, you need not include that penalty assessment in responding to this question.

☐ Yes ☐ No

VERIFICATION AND SIGNATURE

I, the undersigned, certify and declare that I have read all the foregoing answers to this Minimum Qualifications Questionnaire, and know their contents. The matters stated in these Questionnaire answers are true of my own knowledge and belief, except as to those matters stated on information and belief, and as to those matters I believe them to be true. I declare under penalty of perjury under the laws of the State of California that the foregoing is true and correct.

Signed at _____, on _____.
(Location) (Date)

Signature: _____

Print name: _____

Title: _____

NOTE: If two or more entities submit a bid on a contract as a Joint Venture, each entity within the Joint Venture must submit a separate Minimum Qualifications Questionnaire.

REQUIREMENTS OF THE NON-DISCRIMINATION IN EMPLOYEE BENEFITS CODE

INTRODUCTION

The Sacramento Non-Discrimination In Employee Benefits Code (the "Ordinance"), codified as Sacramento City Code Chapter 3.54, prohibits City contractors from discriminating in the provision of employee benefits between employees with spouses and employees with domestic partners, and between the spouses and domestic partners of employees.

APPLICATION

The provisions of the Ordinance apply to any contract or agreement (as defined below), between a Contractor and the City of Sacramento, in an amount exceeding $100,000.00. The Ordinance applies to that portion of a contractor's operations that occur: (i) within the City of Sacramento; (ii) on real property outside the City of Sacramento if the property is owned by the City or if the City has a right to occupy the property; or (iii) at any location where a significant amount of work related to a City contract is being performed.

The Ordinance does not apply: to subcontractors or subcontracts of any Contractor or contractors; to transactions entered into pursuant to cooperative purchasing agreements approved by the Sacramento City Council; to legal contracts of other governmental jurisdictions or public agencies without separate competitive bidding by the City; where the requirements of the ordinance will violate or are inconsistent with the terms or conditions of a grant, subvention or agreement with a public agency or the instructions of an authorized representative of any such agency with respect to any such grant, subvention or agreement; to permits for excavation or street construction; or to agreements for the use of City right-of-way where a contracting utility has the power of eminent domain.

DEFINITIONS

As set forth in the Ordinance, the following definitions apply:

"Contract" means an agreement for public works or improvements to be performed, or for goods or services to be purchased or grants to be provided, at the expense of the City or to be paid out of moneys deposited in the treasury or out of the trust money under the control or collected by the City. "Contract" also means a written agreement for the exclusive use ("exclusive use" means the right to use or occupy real property to the exclusion of others, other than the right reserved by the fee owner) or occupancy of real property for a term exceeding 29 days in any calendar year, whether by singular or cumulative instrument, (i) for the operation or use by others of real property owned or controlled by the City for the operation of a business, social, or other establishment or organization, including leases, concessions, franchises and easements, or (ii) for the City's use or occupancy of real property owned by others, including leases, concessions, franchises and easements.

"Contract" shall not include: a revocable at-will use or encroachment permit for the use of or encroachment on City property regardless of the ultimate duration of such permit; excavation, street construction or street use permits; agreements for the use of City right-of-way where a contracting utility has the power of eminent domain; or agreements governing the use of City property that constitute a public forum for activities that are primarily for the purpose of espousing or advocating causes or ideas and that are generally protected by the First Amendment to the United States Constitution or that are primarily recreational in nature.

“Contractor” means any person or persons, firm partnership or corporation, company, or combination thereof, that enters into a Contract with the City. “Contractor” does not include a public entity.

“Domestic Partner” means any person who has a currently registered domestic partnership with a governmental entity pursuant to state or local law authorizing the registration.

“Employee Benefits” means bereavement leave; disability, life, and other types of insurance; family medical leave; health benefits; membership or membership discounts; moving expenses; pension and retirement benefits; vacation; travel benefits; and any other benefit given to employees. “Employee benefits” shall not include benefits to the extent that the application of the requirements of this chapter to such benefits may be preempted by federal or state.

CONTRACTOR’S OBLIGATION TO PROVIDE THE CITY WITH DOCUMENTATION AND INFORMATION

Contractor shall provide the City with documentation and information verifying its compliance with the requirements of the Ordinance within ten (10) days of receipt of a request from the City. Contractors shall keep accurate payroll records, showing, for each City Contract, the employee’s name, address, Social Security number, work classification, straight time pay rate, overtime pay rate, overtime hours worked, status and exemptions, and benefits for each day and pay period that the employee works on the City Contract. Each request for payroll records shall be accompanied by an affidavit to be completed and returned by the Contractor, as stated, attesting that the information contained in the payroll records is true and correct, and that the Contractor has complied with the requirements of the Ordinance. A violation of the Ordinance or noncompliance with the requirements of the Ordinance shall constitute a breach of contract.

EMPLOYER COMPLIANCE CERTIFICATE AND NOTICE REQUIREMENTS

(a) All contractors seeking a Contract subject to the Ordinance shall submit a completed Declaration of Compliance Form (attachment “A”), signed by an authorized representative, with each proposal, bid or application. The Declaration of Compliance shall be made a part of the executed contract, and will be made available for public inspection and copying during regular business hours.

(b) The Contractor shall give each existing employee working directing on a City contract, and (at the time of hire), each new employee, a copy of the notification provided as attachment “B.”

(c) Contractor shall post, in a place visible to all employees, a copy of the notice provided as attachment “C.”

DECLARATION OF COMPLIANCE
Equal Benefits Ordinance

_____
Name of Contractor

_____
Address

The above named contractor ("Contractor") hereby declares and agrees as follows:

1. I have read and understand the Requirements of the Non-Discrimination In Employee Benefits Code (the "Requirements") provided to me by the City of Sacramento ("City") in connection with the City's request for proposals or other solicitations for the performance of services, or for the provision of commodities, under a City contract or agreement ("Contract").

2. As a condition of receiving the City Contract, I agree to fully comply with the Requirements, as well as any additional requirements that may be specified in the City's Non-Discrimination in Employee Benefits Code codified at Chapter 3.54 of the Sacramento City Code (the "Ordinance").

3. I understand, to the extent that such benefits are not preempted or prohibited by federal or state law, employee benefits covered by the Ordinance, are any of the following:

   a. Bereavement Leave
   b. Disability, life, and other types of insurance
   c. Family medical leave
   d. Health benefits
   e. Membership or membership discounts
   f. Moving expenses
   g. Pension and retirement benefits
   h. Vacation
   i. Travel benefits
   j. Any other benefit offered to employees

   I agree that should I offer any of the above listed employee benefits, that I will offer those benefits, without discrimination between employees with spouses and employees with domestic partners, and without discrimination between the spouses and domestic partners of such employees.

4. I understand that I will not be considered to be discriminating in the provision or application of employee benefits under the following conditions or circumstances:

   a. In the event that the actual cost of providing a benefit to a domestic partner or spouse, exceeds the cost of providing the same benefit to a spouse or domestic partner of an employee, I will not be required to provide the benefit, nor shall it be deemed discriminatory, if I require the employee to pay the monetary difference in order to provide the benefit to the domestic partner or to the spouse.

   b. In the event I am unable to provide a certain benefit, despite taking reasonable measures to do so, if I provide the employee with a cash equivalent, I will not be deemed to be discriminating in the application of that benefit.

   c. If I provide employee benefits neither to employee's spouses nor to employee's domestic partners.

   d. If I provide employee benefits to employees on a basis unrelated to marital or domestic partner status.

   e. If I submit, to the Program Coordinator, written evidence of making reasonable efforts to end discrimination in employee benefits by implementing policies which are to be enacted before the

first effective date after the first open enrollment process following the date the Contract is executed with the City.

I understand that any delay in the implementation of such policies may not exceed one (1) year from the date the Contract is executed with the City, and applies only to those employee benefits for which an open enrollment process is applicable.

f. Until administrative steps can be taken to incorporate, in the infrastructure, nondiscrimination in employee benefits

The time allotted for these administrative steps will apply only to those employee benefits for which administrative steps are necessary and may not exceed three (3) months from the date the Contract is executed with the City.

g. Until the expiration of a current collective bargaining agreement(s) where, in fact, employee benefits are governed by a collective bargaining agreement(s).

h. I take all reasonable measures to end discrimination in employee benefits by either requesting the union(s) involved agree to reopen the agreement(s) in order for me to take whatever steps are necessary to end discrimination in employee benefits or by my ending discrimination in employee benefits without reopening the collective bargaining agreement(s).

i. In the event I cannot end discrimination in employee benefits despite taking all reasonable measures to do so, I provide a cash equivalent to eligible employees for whom employee benefits (as listed previously), are not available.

Unless otherwise authorized in writing by the City Manager, I understand this cash equivalent must begin at the time the union(s) refuse to allow the collective bargaining agreement(s) to be reopened or no longer than three (3) months from the date the Contract is executed with the City.

5. I understand that failure to comply with the provisions of Section 4. (a) through 4. (i), above, will subject me to possible suspension and/or termination of this Contract for cause; repayment of any or all of the Contract amount disbursed by the City; debarment for future contracts until all penalties and restitution have been paid in full; deemed ineligible for future contracts for up to two (2) years; the imposition of a penalty, payable to the City, in the sum of $50.00 for each employee, for each calendar day during which the employee was discriminated against in violation of the provisions of the Ordinance.

6. I understand and do hereby agree to provide each current employee and, within ten (10) days of hire, each new employee, of their rights under the Ordinance. I further agree to maintain a copy of each such letter provided, in an appropriate file for possible inspection by an authorized representative of the City. I also agree to prominently display a poster informing each employee of these rights.

7. I understand that I have the right to request an exemption to the benefit provisions of the Ordinance when such a request is submitted to the Procurement Services Division, in writing with sufficient justification for resolution, prior to contract award.

I further understand that the City may request a waiver or exemption to the provisions or requirements of the Ordinance, when only one contractor is available to enter into a contract or agreement to occupy and use City property on terms and conditions established by the City; when sole source conditions exist for goods, services, public project or improvements and related construction services; when there are no responsive bidders to the Ordinance requirements and the contract is for essential goods or services; when emergency conditions with public health and safety implications exist; or when the contract is for specialized legal services if in the best interest of the City.

8. In consideration of the foregoing, I shall defend, indemnify and hold harmless, the City, its officers and employees, against any claims, actions, damages, costs (including reasonable attorney fees), or other liabilities of any kind arising from any violation of the Requirements or of the Ordinance by me.

I declare under penalty of perjury under the laws of the State of California that the foregoing is true and correct, and that I am authorized to bind the Contractor to the provisions of this Declaration.

_____ _____

Signature of Authorized Representative Date

_____

Print Name

_____

Title

YOUR RIGHTS UNDER THE CITY OF SACRAMENTO'S

NON-DISCRIMINATION IN EMPLOYEE BENEFITS BY CITY CONTRACTORS ORDINANCE

On …….. (date), your employer (the "Employer") entered into a contract with the City of Sacramento (the "City") for …….. (contract details), and as a condition of that contract, agreed to abide by the requirements of the City's Non-Discrimination In Employee Benefits By City Contractors Ordinance (Sacramento City Code Section 3.54).

The Ordinance does not require the Employer to provide employee benefits. The Ordinance does require that if certain employee benefits are provided by the Employer, that those benefits be provided without discrimination between employees with spouses and employees with domestic partners, and without discrimination between the spouse or domestic partner of employees.

The Ordinance covers any employee working on the specific contract referenced above, but only for the period of time while those employees are actually working on this specific contract.

The included employee benefits are:

- Bereavement leave
- Disability, life and other types of insurance
- Family medical leave
- Health benefits
- Membership or membership discounts
- Moving expenses
- Pension and retirement benefits
- Vacation
- Travel benefits
- Any other benefits given to employees

(Employee Benefits does not include benefits that may be preempted by federal or state law.)

If you feel you have been discriminated or retaliated against by your employer in the terms and conditions of your application for employment, or in your employment, or in the application of these employee benefits, because of your status as an applicant or as an employee protected by the Ordinance, or because you reported a violation of the Ordinance, and after having exhausted all remedies with your employer,

You May . . .

- Submit a written complaint to the City of Sacramento, Contract Services Unit, containing the details of the alleged violation. The address is:

  City of Sacramento
  Contract Services Unit
  915 I St., 2nd Floor
  Sacramento, CA 95814

- Bring an action in the appropriate division of the Superior Court of the State of California against the Employer and obtain the following remedies:

  - Reinstatement, injunctive relief, compensatory damages and punitive damages

  - Reasonable attorney's fees and costs

YOUR RIGHTS UNDER THE CITY OF SACRAMENTO'S

NON-DISCRIMINATION IN EMPLOYEE BENEFITS BY CITY CONTRACTORS ORDINANCE

If your employer provides employee benefits, they must be provided to those employees working on a City of Sacramento contract without discriminating between employees with spouses and employees with domestic partners.

The included employee benefits are:

- Bereavement leave
- Disability, life and other types of insurance
- Family medical leave
- Health benefits
- Membership or membership discounts
- Moving expenses
- Pension and retirement benefits
- Vacation
- Travel benefits
- Any other benefits given to employees

If you feel you have been discriminated against by your employer . . .

You May . . .

- Submit a written complaint to the City of Sacramento, Contract Services Unit, containing the details of the alleged violation. The address is:

  City of Sacramento
  Contract Services Unit
  915 I St., 2nd Floor
  Sacramento, CA 95814

- Bring an action in the appropriate division of the Superior Court of the State of California against the employer and obtain reinstatement, injunctive relief, compensatory damages, punitive damages and reasonable attorney's fees and costs.

Discrimination and Retaliation Prohibited.

If you feel you have been discriminated or retaliated against by your employer in the terms and conditions of your application for employment, or in your employment, because of your status as an applicant or as an employee protected by the Ordinance, or because you reported a violation of this Ordinance . . .

You May Also . . .

Submit a written complaint to the City of Sacramento, Contract Services Unit, at the same address, containing the details of the alleged violation.

Construction and Demolition (C&D) Debris Recycling Requirements

As a condition of receiving this Contract, Contractor agrees to fully comply with the requirements specified herein for all demolition projects, as well as projects with a valuation of $250,000 or more:

1. **Definitions**. For purposes of this section, the following terms, words and phrases shall have the following meanings:

"Certified C&D sorting facility" means a facility that receives C&D debris and/or processes C&D debris into its component material types for reuse, recycling, and disposal of residuals and possesses a valid certificate as a C&D sorting facility from the Sacramento Regional County Solid Waste Authority.

"Construction and demolition debris" or "C&D debris" means used or commonly discarded materials resulting from construction, repair, remodel or demolition operations on any pavement, house, building, or other structure, or from landscaping that are not hazardous as defined in California Health and Safety Code section 25100 et seq. Such materials include, but are not limited to, concrete, asphalt, wood, metal, brick, dirt, sand, rock, gravel, plaster, glass, gypsum wallboard, cardboard and other associated packaging, roofing material, ceramic tile, carpeting, masonry, plastic pipe, trees, and other vegetative matter resulting from land clearing and landscaping.

"Divert" or "diversion" means to use materials for any purpose other than disposal in a landfill or transformation facility. Methods to divert materials include on-site reuse of the materials, delivery of materials from the project site to a certified C&D sorting facility or a recycling facility, or other methods as approved in regulations promulgated by the City Department of Utilities.

"Franchised waste hauler" means a person who possesses a valid commercial solid waste collection franchise issued by the Sacramento Regional County Solid Waste Authority.

"Mixed C&D debris" means loads that include commingled recyclable and non-recyclable C&D debris generated at a project site.

"Recyclable C&D debris" means C&D debris required to be diverted from landfills as specified in the Waste Management Plan and returned to the economic mainstream in the form of raw material for new, reused or reconstituted products that meet the quality standards necessary to be used in the marketplace.

"Recycling facility" means a facility or operation that receives, processes, and transfers source-separated recyclable materials.

"Source-separated C&D debris" means recyclable C&D debris that is separately sorted and containerized at the site of generation by individual material type and segregated from mixed C&D debris prior to collection and transporting.

"Waste log" means a record detailing the management of C&D debris generated by the covered project, including the date and weight/volume of material by type that was salvaged, reused, recycled or disposed.

2. **Waste Management Plan**. A completed WMP (see **Attachment 1**) must be submitted to and approved by the City prior to commencing any work on the project. The WMP must specify the types of C&D debris that will be generated from the project; the manner in which C&D debris will be managed and/or stored on the project site; the manner in which recyclable C&D debris generated from the project will be recycled or reuse; the person who will haul, collect or transport the recyclable C&D debris from the project site; and the certified C&D sorting facility or recycling facility where recyclable C&D debris will be delivered. The WMP must be approved by the City prior to commencing any work on the project.

3. Contractor shall be solely responsible for diverting the recyclable C&D materials specified on the WMP. Mixed C&D debris shall be delivered to a SWA-certified C&D sorting facility only. Only the permit holder, the person who generates the waste, a franchised waste hauler, or the City of Sacramento can transport or haul mixed C&D debris. Source-separated C&D debris may be delivered by any person to any recycling facility that accepts such materials. (See **Attachment 2** for list of C&D Debris Haulers and Facilities).

4. During the course of the project, Contractor shall maintain a waste log (see **Attachment 3**), and keep all weight tickets or weight receipts, for all C&D debris hauled away from the project. At a minimum, the waste log shall specify the C&D debris generated by the project; the manner in which C&D debris was recycled or re-used; and the facility where the C&D debris was delivered.

5. Within 30 days after submitting the project completion report, Contractor shall submit to the City a completed waste log, along with copies of supporting weight tickets. Contractor shall maintain and keep accurate and complete records of al bills, weight receipts or weight tickets that were issued for the collection, transport or disposal of C&D debris for a period of one-year after submittal of the waste log. The records shall be made available for inspection, examination and audit by the City during the one-year retention period to validate the information provided in the WMP and in the waste log. If the City determines noncompliance by the Contractor after an audit has been conducted, Contractor shall reimburse the City for all costs incurred in performing the audit.

6. Failure by Contractor to comply with any provisions specified herein will subject Contractor to possible suspension and/or termination of this Contract for cause; repayment of any or all of the Contract amount disbursed by the City; imposition of a penalty, payable to the City ($50-$250 for first offense, $251-$500 for second offense, and $501-$1500 for subsequent offenses); and/or submission of a performance security deposit fee when submitting a permit application to the City for a project within one year of imposition of the penalty.

For questions or to obtain more information about the Recycling Requirements for C&D debris, contact the City of Sacramento, Solid Waste Services Division, 2812 Meadowview Road, Building 1, Sacramento, CA 95832, or telephone (916) 808-4833, or email C&D@cityofsacramento.org

C&D Debris Waste Management Plan

C&D Debris Waste Management Plan
City of Sacramento Solid Waste Services
2812 Meadowview Road, Building 1
Sacramento, CA 95832
Phone: (916) 808-4839 / Fax: (916) 808-4999
C&D@cityofsacramento.org

Form submitted by:	
	Please attach a business card, or put your name with a phone number and/or an email address.

This Waste Management Plan (WMP) must be submitted and approved before work can begin. Only one WMP is required for each public construction project. The administration fee and, if applicable, a security deposit must be submitted with this form to be approved. Administration fee is 0.04% of project bid amount (min $40, max $800); security deposit, if applicable, is 1% of bid amount (max $10,000). The accompanying Waste Log must be submitted within 30 days of the project completion report, or a penalty may be imposed.

A. Building Project Information:

Job Address: _____ Engineering Estimate: _____
Contractor: _____ Phone: _____
Address: _____ Email: _____

B. Briefly describe the project:

_____

_____

_____

_____

_____

C. Materials Required to be Recycled

50% of all debris must be recycled if generated during the course of your project. You can either **source-separate** them, which may be hauled by anyone, or mix them in one container and send the **mixed C&D debris** load to a **Certified Mixed C&D Sorting Facility**. Mixed C&D loads can only be hauled by a franchised hauler or self-hauled. Please see the Definitions section, on the next page, for more information.

50%
of all debris must be recycled

D. Material Management.

1. **How will C&D debris will be stored on the project site**: _____ Mixed C&D _____ Source-Separated
2. **Company to haul away debris**: _____
3. **Facilities to receive debris**: _____

C&D Debris Waste Management Plan

C&D Debris Waste Management Plan
City of Sacramento Solid Waste Services
2812 Meadowview Road, Building 1
Sacramento, CA 95832
Phone: (916) 808-4839 / Fax: (916) 808-4999
C&D@cityofsacramento.org

E. Definitions.

Please read and understand these terms. Call Solid Waste at (916) 808-4833 if these terms are not clear to you. More information is also available online at http://www.cityofsacramento.org/utilities/.

1. **Self-haul or self-hauling**: This is when the general contractor or a subcontractor *who is doing work on the project* hauls their own waste materials for recycling or disposal. Note that a *jobsite cleanup crew is not doing other work on the project and is not self-hauling*. Jobsite cleanup crews need to be franchised in order to haul mixed C&D debris away.

2. **Franchised hauler**: Check the Department of Utilities (DOU) website for a list of these haulers. Only these companies and the City of Sacramento can collect and haul mixed C&D debris generated within the City for a fee.

3. **Source separation**: This means keeping wood, metal, cardboard, or other recyclables in separate containers, and sending the materials to an authorized recycler. A list of authorized recyclers can be found on the DOU web site. Source-separated materials may be hauled by anyone.

4. **Mixed C&D debris**: This means putting all recyclable debris into one container. Mixed materials must be sent to a certified mixed C&D sorting facility. Mixed materials may be either self-hauled or hauled by a franchised hauler. If your job site is crowded, this option saves the most space.

5. **Certified Mixed C&D Sorting Facility**: See the DOU web site for a list. These facilities have been certified by the Sacramento Regional Solid Waste Authority (SWA) to extract recyclable materials from mixed C&D debris.

F. Terms and Conditions

- Your approved Waste Management Plan and Waste Log must be kept on the job site for the duration of the project.
- City of Sacramento Solid Waste Services staff may enter the jobsite to inspect waste collection areas.
- **ALL** Clean Wood Waste (unpainted, untreated lumber, plywood and OSB), Inert Materials (concrete, asphalt paving, brick, block, and dirt), Wooden Pallets, Scrap Metal, and Corrugated Cardboard must be recycled.
- Only SWA-Certified Mixed C&D Sorting Facilities may be used to recycle these materials if mixed with other materials.
- Only the City of Sacramento, SWA-Franchised Haulers, or self-haulers (as defined above) may collect and transport mixed C&D material from the jobsite.
- C&D Debris may not be burned or dumped illegally.
- Your Waste Log must be completed and submitted, with supporting weight tickets, within 30 days of submitting your project completion report. All waste hauling and disposal or recycling activity must be entered on the Waste Log, including information from any subcontractors who self-hauled their own debris off-site.
- You must keep all receipts or weight-tickets from your project for a period of one year from the submittal of your waste log.
- Failure to comply with these terms and conditions may result in a fine and payment of a security deposit on future projects

C&D Debris Haulers & Facilities

C&D Debris Waste Management Plan
City of Sacramento Solid Waste Services
2812 Meadowview Road, Building 1
Sacramento, CA 95832
Phone: (916) 808-4833 / Fax: (916) 808-4999
C&D@cityofsacramento.org

Certified Mixed C&D Facilities

Allied Waste / Elder Creek Transfer and Recovery	(916) 387-8425
Florin-Perkins Public Disposal	(916) 443-5120
L&D Landfill	(916) 737-8640
Waste Management / K&M Recycle America	(916) 452-0142

Franchised Haulers

ACES Waste Services, Inc.	(866) 488-8837	Elk Grove Waste Management, LLC	(916) 689-4052
Allied Waste Services	(916) 631-0600	Mini Drops, Inc.	(916) 686-8785
All Waste Systems, Inc.	(916) 456-1555	Norcal Waste Services of Sacramento	(916) 381-5300
Atlas Disposal Industries, LLC	(916) 455-2800	North West Recyclers	(916) 686-8575
California Waste Recovery Systems	(916) 441-1985	Waste Management of Sacramento	(916) 387-1400
Central Valley Waste Services, Inc.	(209) 369-8274	Waste Removal & Recycling	(916) 453-1400
City of Sacramento Solid Waste	(916) 808-4839	Western Strategic Materials, Inc.	(916) 388-1076

Recyclers*

Bell Marine	(916) 442-9089
C & C Paper Recycling	(916) 920-2673
EBI Aggregates	(916) 372-7580
International Paper	(916) 371-4634
Modern Waste Solutions	(916) 447-6800
PRIDE Industries, Inc.	(916) 640-1300
Recycling Industries, Inc.	(916) 452-3961
Sacramento Local Conservation Corps	(916) 386-8394
Smurfit-Stone Container Corporation	(916) 381-3340
Southside Art Center	(916) 387-8080
Spencer Building Maintenance, Inc.	(916) 922-1900

Recovery Stations & Landfills

Elder Creek Recovery & Transfer Station	(916) 387-8425
Kiefer Landfill	(916) 875-5555
L & D Landfill	(916) 383-9420
North Area Recovery Station	(916) 875-5555
Sacramento Recycling & Transfer Station	(916) 379-0500
Waste Management Recycle America	(916) 452-0142

More updated information can be found online at:
http://www.cityofsacramento.org/utilities/

* Please note that any facility may receive source-separated recyclable materials as long as it is authorized to do so by the State of California. This is not meant to be a complete list.

C&D Debris Waste Log

C&D Debris Waste Management Plan
City of Sacramento Solid Waste Services
2812 Meadowview Road, Building 1
Sacramento, CA 95832
Phone: (916) 808-4839 / Fax: (916) 808-4999
C&D@cityofsacramento.org

Project address: _____

This waste log, and copies of supporting weight tickets, must be submitted to Solid Waste within 30 days of submitting the project completion report. The waste log and weight tickets must also be kept on file for one year after project completion.

Date	Hauler	Material	Destination	Amount

Hauler: Indicate the Franchisee, Self-Hauler, City of Sacramento, or other hauler who removed the material offsite.
Material: Indicate appropriate category: Scrap Metal, Inert Materials, Cardboard, Wooden Pallets, or Clean Wood Waste.
Destination: Indicate the facility that received the material for disposal or recycling
Amount: Indicate the weight. If weight is not known, put volume.

.

Green Contracting Survey
(Voluntary)

The City of Sacramento and the Sacramento Metropolitan Air Quality District (SMAQMD) are conducting a joint pilot project to help meet Federal Clean Air Standards for the Sacramento region.

Attached is a Green Contracting Fleet Inventory Form. Please complete the form, remove it from the bid package and return it to SMAQMD in the postage paid envelope provided with the bid package. Please do not return the Green Contracting Fleet Inventory Form to the City of Sacramento with the bid documents or otherwise.

A limited amount of funds and other financial incentives may be available to qualified contractors participating in this joint project to assist qualified contractors with upgrading and/or replacing equipment and/or trucks.

Completing and returning the Green Contracting Fleet Inventory Form is strictly voluntary

Voluntary Green Contracting Fleet Inventory List (On-Road Equipment)

In partnership with the City of Sacramento and the Sacramento Metropolitan Air Quality Management District

Company Name:	
Contact Name:	
Company Address:	
City, State, ZIP:	
Company Phone:	

	City Bid Information
Department	
Project #	
LBE	

Instructions:

a) Please enter the vehicle / equipment information for each unit used in conjunction with your City of Sacramento Bid.
b) All fields are required for both on-road heavy-duty vehicles and off-road construction equipment over 50 HP.
c) Electronic version available at http://www.airquality.org/ceqa/index.shtml
d) For additional questions, please call (916) 874-4892

Please Submit To:

Kristian Damkier, P.E.
Sacramento Metropolitan AQMD
777 12th St, 3rd Floor
Sacramento, CA 95814-1908

#	VIN	License Plate	Vehicle Information			Engine Information				Annual Usage (miles)	Received Funding
			Make	Model	Year	Make	Model	Year	HP		
(ex)	*1XP5AAC35RG339402*	*1T45678*	*Kenworth*	*T-300*	*2002*	*Cummins*	*ISB*	*2002*	*250*	*35,000*	*No*

Voluntary Green Contracting Fleet Inventory List (On-Road Equipment)

In partnership with the City of Sacramento and the Sacramento Metropolitan Air Quality Management District

Company Name:	
Contact Name:	
Company Address:	
City, State, ZIP:	
Company Phone:	

	City Bid Information
Department	
Project #	
LBE	

Instructions:

a) Please enter the vehicle / equipment information for each unit used in conjunction with your City of Sacramento Bid.
b) All fields are required for both on-road heavy-duty vehicles and off-road construction equipment over 50 HP.
c) Electronic version is available at http://www.airquality.org/ceqa/index.shtml
d) For additional questions, please call (916) 874-4892

Please Submit To:

Kristian Damkier, P.E.
Sacramento Metropolitan AQMD
777 12th St, 3rd Floor
Sacramento, CA 95814-1908

Equipment Serial Number	Equipment Information				Engine Information				Annual Usage (hours)
	Make	Model	Type	Year	Make	Model	Year	HP	
48W34456	*Caterpillar*	*631G*	*Scraper*	*2003*	*Caterpillar*	*3408E*	*2003*	*485*	*1,600*

LOCAL BUSINESS ENTERPRISE (LBE) PARTICIPATION REQUIREMENTS FOR PUBLIC PROJECTS OF $100,000 OR MORE

(City Contracts no Federal Funds Used)

I. LBE PARTICIPATION REQUIREMENT

On April 3, 2012, the Sacramento City Council adopted a Local Business Enterprise (LBE) Preference Program to provide enhanced opportunities for the participation of local business enterprises (LBEs) in the City's contracting and procurement activities. On November 19, 2013, the City Council increased the LBE preference percentage and authorized City departments to require minimum LBE participation levels in specific contracts. Under City Code section 3.60.270, when the bid specifications for a City contract establish a minimum participation level for LBEs, no bidder on the contract shall be considered responsive unless its bid meets the minimum LBE participation level required by the bid specifications.

The City has established **a minimum 5% participation level for LBEs on this contract**. Pursuant to City Code Section 3.60.270, no bidder on this contract shall be considered responsive unless its bid meets or exceeds this minimum participation level.

Bidder and any other business entity listed on the LBE forms submitted shall comply with all applicable laws relating to licensing, permitting, and payment of taxes and fees in the City of Sacramento or County of Sacramento; and shall not be in arrears to the City of Sacramento or County of Sacramento, upon award of a contract.

II. LBE QUALIFICATION

A. A LBE designated in the bid must be qualified as a LBE prior to the time set for submission of bids.

B. Local Business Enterprise means a business enterprise, including but not limited to, a sole proprietorship, partnership, limited liability company, corporation, or other business entity that has a legitimate business presence in the City or unincorporated county of Sacramento. Proof of legitimate business presence in the City or unincorporated county of Sacramento shall include:

1. Having a current City of Sacramento Business Operation Tax or County of Sacramento Business License for at least twelve (12) consecutive months prior to submission of bid; and
2. Having either of the following types of offices or workspace operating legally within the City or unincorporated county of Sacramento for at least twelve (12) consecutive months prior to submission of bid:
    a. The LBE's principle business office or workspace; or
    b. The LBE's regional, branch or satellite office with at least one full time employee located in the City or unincorporated county of Sacramento.

C. A LBE must provide a physical address for the basis of location. This excludes P.O. Box addresses.

D. A LBE must provide a current copy of the City of Sacramento Business Operations Tax Certificate or County of Sacramento Business License.

III. DETERMINATION OF LBE PARTICIPATION LEVEL

A. LBE Participation: The percentage of LBE participation is determined based on the dollar value of the work to be performed or supplies to be furnished by certified LBEs designated in the bidder's Subcontractor and LBE Participation Verification Form, relative to the total dollar amount of the bid.

B. Participation Credit: To receive credit for participation:(1) a LBE subcontractor must be responsible for the execution of a distinct element of the work, must possess any license or certification required for the work, and must actually perform, manage, or supervise the work without subcontracting or otherwise shifting any portion of the work to another subcontractor; and (2) a LBE supplier must furnish materials, equipment, or supplies that the supplier sells as a recurring, although not necessarily primary, part of its business, and that are necessary for performance of the work.

C. Suppliers: Credit for a LBE supplier of materials, equipment, or supplies is counted as one hundred (100) percent of the amount paid to the supplier for the material, equipment, or supplies. To receive this credit, LBE suppliers must be listed on the bidder's Subcontractor and LBE Participation Verification Form.

D. Subcontractors (including truckers): To receive credit for a LBE subcontractor, the subcontractor must be listed on the bidder's Subcontractor and LBE Participation Verification Form.

- Truckers: Credit for a LBE trucker is counted as one hundred (100) percent of the amount paid to the trucker for trucking services, not including any amount paid to the trucker for the cost of any materials, equipment, or supplies being transported by the trucker.

IV. LBE REQUIREMENTS FOR CONTRACTOR

A. LBE Records: The Contractor shall maintain records of all subcontracts with verified LBE subcontractors and records of materials purchased from verified LBE suppliers for one (1) year after receiving final payment from the City. Such records shall show the name and business address of each LBE subcontractor or supplier and the total dollar amount actually paid each LBE subcontractor or supplier.

Not later than 30 days after completion of the work performed under the contract, a summary of these records shall be prepared, certified correct by the Contractor's authorized representative and furnished to the City. The Contractor shall provide such other information, records, reports, certifications or other documents as may

be required by City, to determine compliance with any provision of the LBE program or these specifications.

B. Performance of LBE Subcontractors and Suppliers: The LBEs listed by the Contractor shall perform the work and supply the materials, equipment, and supplies for which they are listed unless the Contractor has received prior written authorization from the City to perform the work with other forces or to obtain the material, equipment, or supplies from other sources. Reasons for requesting such authorization would include:

1. The listed LBE fails to execute a written contract based upon the general terms, conditions, plans, and specifications for the project.

2. The listed LBE becomes bankrupt or insolvent.

3. The listed LBE subcontractor fails to meet the bond requirements of the Contractor.

4. The work performed or the materials/equipment/supplies provided by the listed LBE are unsatisfactory or are not in accordance with the plans and specifications, or the listed LBE fails to perform its contractual obligations.

5. It would be in the best interest of the City.

C. Subcontractor Substitution: No substitution of a LBE subcontractor shall be made at any time without compliance with the Subletting and Subcontracting Fair Practices Act. If a LBE subcontractor is unable to perform successfully and is to be replaced, the Contractor shall make reasonable efforts to replace the original LBE subcontractor with another verified LBE subcontractor. The new LBE subcontractor must be verified at the time of substitution.

D. Reporting and Utilization Requirements and Sanctions: Failure to provide specific information, records, reports, certifications, or any other documents required for compliance with these specifications, or failure to utilize one or more LBEs in substantial compliance with the LBE utilization indicated in the Contractor's bid (unless otherwise authorized by City as provided herein, or when such failure results from changes to the work approved by the City), shall be considered a breach of the contract, and a deduction may be made from the contract amount. The deduction shall be not more than ten (10) percent of the value of the work or materials/equipment/supplies that the subject LBE(s) were listed to perform/provide in the Contractor's bid, and shall be deducted from any payment due to the Contractor. This is in addition to any deduction that may be made under any other provision of the contract, the Sacramento City Code, or State law.

E. Hearing and Review of Division Manager Decision: Prior to making a deduction pursuant to Section IV (D), above, the City shall provide written notice of the proposed deduction to the Contractor, and the Contractor may, not later than five (5) working days after receiving such notice, provide a written request to City for a hearing to contest the proposed deduction. Upon receipt of a timely written

request from the Contractor, the City shall schedule a hearing before the Division Manager (as defined in the City's Standard Specifications for Public Construction), and written notice of the date, time and location of the hearing shall be provided to the Contractor not less than five (5) working days prior to the date of the hearing. The hearing shall be conducted in the manner specified in Section 4-8 of the Standard Specifications, and the Division Manager shall prepare and forward to the Contractor a written decision as soon as practicable after the hearing. The Division Manager's decision shall be subject to review in accordance with the provisions of Section 4-9 of the Standard Specifications. Failure to request such review in compliance with the requirements set forth in Section 4-9 shall constitute acceptance of the Division Manager's decision by the Contractor.

The written notices and requests described above shall be provided by registered or certified mail (return receipt requested), by telecopy, by personal delivery, or by any other method that provides reliable evidence of the date of receipt. Written notice provided by telecopy shall be deemed received on the date that it is transmitted and transmission is confirmed by the transmitting machine. Written notice provided by personal delivery shall be deemed received on the date of delivery.

V. DEFINITIONS

A. Local Business Enterprise (LBE): A business enterprise, including but not limited to, a sole proprietorship, partnership, limited liability company, corporation, or any other business entity that has a legitimate business presence in the City of Sacramento or unincorporated county of Sacramento.

B. Contractor: The sole proprietorship, partnership, limited liability company, corporation, or any other business entity entering into a contract with the City of Sacramento.

C. Subcontractor: The sole proprietorship, partnership, limited liability company, corporation, or other business entity entering into a contract with the prime contractor to perform a portion of the work.

D. Supplier: The sole proprietorship, partnership, limited liability company, corporation, or other business entity to provide materials, equipment, or supplies necessary for performance of the work.

E. Proposal: Any response to a City solicitation for Proposals or Qualifications.

F. Bid: Any response to a City solicitation for bids.

FOLLOWING FORMS TO BE FILLED OUT AND SIGNED

ONLY

IF AWARDED CONTRACT

WORKER'S COMPENSATION INSURANCE CERTIFICATION

TO THE CITY OF SACRAMENTO:

The undersigned does hereby certify that he is aware of the provisions of Section 3700 et seq. of the Labor Code which require every employer to be insured against liability for worker's compensation claims or to undertake self-insurance in accordance with the provisions of said Code, and that he/she will comply with such provisions before commencing the performance of the work on this contract.

_____
Bidder

BY: _____

Title: _____

Address: _____

_____

Date: _____

PLEASE READ CAREFULLY BEFORE SIGNING

To be signed by authorized corporate officer or partner or individual submitting the bid. If bidder is: (example)

1. An individual using a firm name, sign: "John Doe, and individual doing business as Blank Company".

2. An individual doing business under his own name, sign: Your name only.

3. A co-partnership, sign: "John Doe and Richard Doe, co-partners doing business as Blank Company, by, John Doe, Co-Partner".

4. A corporation, sign: "Blank Company, by John Doe, Secretary". (Or other title)

AGREEMENT
(Construction Contract Over $25,000)

THIS AGREEMENT, dated for identification _____, 20__, is made and entered into between the CITY OF SACRAMENTO, a municipal corporation ("City"), and _____ ("Contractor").

The City and Contractor hereby mutually agree as follows:

1. CONTRACT DOCUMENTS

The Contract Documents, sometimes also referred to as the "Contract," consist of the following items, which are hereby incorporated by reference as if set forth in full in this Agreement:

The Notice to Contractors
The Proposal Form submitted by the Contractor
The Instructions to Bidders
The Local Business Enterprise (LBE) Requirements
The Requirements for the Non-Discrimination in Employee Benefits by City Contractors Ordinance and the Declaration of Compliance
The City's Reference Guide for Construction Contracts
The Addenda, if any
This Agreement
The Standard Specifications
The Special Provisions
The Plans and Technical Specifications
The drawings and other data and all developments thereof prepared by City pursuant to the Contract
Any modifications of any of the foregoing made or approved by City, including but not limited to duly authorized change orders.

Unless specifically noted otherwise, references to the "Standard Specifications" shall mean and refer to the Standard Specifications for Public Construction of the City of Sacramento approved by the Sacramento City Council on June 4, 2007 (Resolution No. 2007-350), and any subsequent amendments thereto approved by the Sacramento City Council or the Sacramento City Manager. Work called for in any one Contract Document and not mentioned in another is to be performed and executed as if mentioned in all Contract Documents. The table of contents, titles and headings contained in the Contract Documents are provided solely to facilitate reference to various provisions of the Contract Documents and in no way affect or limit the interpretation of the provisions to which they refer.

2. DEFINITIONS

Unless otherwise specifically provided herein, all words and phrases defined in the Standard Specifications shall have the same meaning and intent in this Agreement.

3. AGREEMENT CONTROLS

In the event of a conflict between any of the terms and conditions set forth in this Agreement and the terms and conditions set forth in other Contract Documents, the terms and conditions set forth in this Agreement shall prevail, except that the provisions of any duly authorized change order shall prevail over any conflicting provisions of this Agreement.

4. SCOPE OF CONTRACT

Contractor agrees to furnish all tools, equipment, apparatus, facilities, labor, material and transportation necessary to perform and complete in a good and workmanlike manner to the satisfaction of City, all the Work called for in the Contract Documents entitled:

OAK PARK & COLONIAL HEIGHTS WATER IMPROVEMENTS (PN: Z14010069)

including the Work called for in the following alternative bid items described in the Proposal Form:

_____

Contractor agrees to perform such Work in the manner designated in and in strict conformity with the Contract Documents.

5. CONTRACT AMOUNT AND PAYMENTS

City agrees to pay and Contractor agrees to accept, as complete payment for the above Work, in accordance with the schedule and procedures set forth in the Contract Documents and subject to deductions, withholdings and additions as specified in the Contract Documents, a total sum that shall not exceed the total bid amount set forth in Contractor's Proposal Form. In addition, subject to deductions, withholdings and additions as specified in the Contract Documents, payment for individual items of the Work shall be computed as follows:

(A) For items of the Work for which a lump sum price is specified in Contractor's Proposal Form, Contractor shall be paid the lump sum price(s) specified in Contractor's Proposal Form; and

(B) For items of the Work for which a unit price is specified in Contractor's Proposal Form, Contractor shall be paid the sum computed at such unit price, or computed at a different price if such different price is determined by City in accordance with the Standard Specifications, based on the actual amount of each such item performed and/or furnished and incorporated in the Work; provided that in no event shall the total sum for a unit price item exceed the total bid amount set forth for such item in the Contractor's Proposal Form, unless authorized by Change Order.

6. PROGRESS PAYMENTS

Subject to the terms and conditions of the Contract, City shall cause payments to be made upon demand of Contractor as follows:

(A) On or about the first of the month, the Engineer shall present to the Contractor a statement showing the amount of labor and materials incorporated in the Work through the twentieth (20) calendar day of the preceding month. After both Contractor and Engineer approve the statement in writing, and the City's labor compliance officer provides written approval, the City shall issue a certificate for ninety-five (95) percent of the amount it shall find to be due, subject to any deductions or withholdings authorized or required under the Contract or any applicable Laws or Regulations.

(B) No inaccuracy or error in said monthly estimates shall operate to release Contractor from damages arising from such Work or from enforcement of each and every provision of the Contract Documents, and City shall have the right subsequently to correct any error made in any estimate for payment.

(C) Contractor shall not be paid for any defective or improper Work.

(D) The remaining five (5) percent of the value of the Work performed under the Contract, if unencumbered and subject to any deductions or withholdings authorized or required under the Contract or any applicable Laws or Regulations, shall be released not later than sixty (60) days after completion and final acceptance of the Work by City. Acceptance by Contractor of the final payment shall constitute a waiver of all claims against the City arising under the Contract Documents, except for disputed claims in stated amounts that the Contractor specifically reserves

in writing, but only to the extent that the Contractor has complied with all procedures and requirements applicable to the presentation and processing of such claim(s) under the Contract Documents. Contractor shall be entitled to substitute securities for retention or to direct that payments of retention be made into escrow, as provided in Public Contract Code Section 22300, upon execution of the City's Escrow Agreement for Security Deposits in Lieu of Retention.

(E) The parties agree that, for purposes of the timely progress payment requirements specified in Public Contract Code Section 20104.50, the date that the City receives a statement jointly approved by the Contractor and the Engineer as provided above shall be deemed to constitute the date that City receives an undisputed and properly submitted payment request from the Contractor. Progress payments not made within 30 days after this date may be subject to payment of interest as provided in Public Contract Code Section 20104.50.

7. RETENTION OF SUMS CHARGED AGAINST CONTRACTOR

When, under the provisions of this Contract or any applicable Laws or Regulations, City is authorized or required to withhold, deduct or charge any sum of money against Contractor, City may deduct and retain the amount of such charge from the amount of the next succeeding progress estimate(s), or from any other moneys due or that may become due Contractor from City. If, on completion or termination of the Contract, sums due Contractor are insufficient to pay City's charges, City shall have the right to recover the balance from Contractor or its Sureties.

8. COMMENCEMENT AND PROSECUTION OF WORK

Contractor shall commence the Work not later than fifteen (15) working days after the date of the written Notice to Proceed from City to Contractor and shall diligently prosecute the Work to final completion. The phase "commence the Work" means to engage in a continuous program on-site including, but not limited to, site clearance, grading, dredging, land filling and the fabrications, erection, or installation of the Work. The Notice to Proceed shall be issued within fifteen (15) calendar days following execution of the Agreement by the City and the filing by Contractor of the required Bonds and proof of insurance, provided that the Engineer may delay issuance of the Notice to Proceed if the Engineer determines in the Engineer's sole discretion that conditions on the site of the Work are unsuitable for commencement of the Work. After the Notice to Proceed is issued, the continuous prosecution of Work by Contractor shall be subject only to Excusable Delays as defined in this Agreement.

9. TIME OF COMPLETION

The entire Work shall be brought to completion in the manner provided for in the Contract Documents on or before **one hundred seventy (170) working days** from the date of the Notice to Proceed (hereinafter called the "Completion Date") unless extensions of time are granted in accordance with the Contract Documents.

Failure to complete the entire Work by the Completion Date and in the manner provided for in the Contract Documents shall subject Contractor to liquidated damages as provided in this Agreement. Time is and shall be of the essence in the performance of the Contract and the Work.

10. PAYMENTS DO NOT IMPLY ACCEPTANCE OF WORK

The payment of any progress payment, or the acceptance thereof by Contractor, shall not constitute acceptance of the Work or any portion thereof and shall in no way reduce the liability of Contractor to replace unsatisfactory work or material, whether or not the unsatisfactory character of such work or material was apparent or detected at the time such payment was made.

11. ACCEPTANCE NOT RELEASE

Contractor shall correct immediately any defective or imperfect work or materials that may be discovered before final acceptance of the entire Work, whether or not such defect or imperfection was previously noticed or identified by the City. The inspection of the Work, or any part thereof, shall not relieve Contractor of any of its obligations to perform satisfactory work as herein specified.

Failure or neglect on the part of City or any of its officers, employees or authorized agents to discover, identify, condemn or reject defective or imperfect work or materials shall not be construed to imply an acceptance of such work or materials, if such defect or imperfection becomes evident at any time prior to final acceptance of the entire Work, nor shall such failure or neglect be construed as barring City from enforcing Contractor's warranty(ies) or otherwise recovering damages or such a sum of money as may be required to repair or rebuild the defective or imperfect work or materials whenever City may discover the same, subject only to any statutes of limitation that may apply to any such claim.

12. CITY'S RIGHT TO TAKE POSSESSION OF THE WORK IN WHOLE OR IN PART

The City shall have the right at any time to enter upon the Work and perform work not covered by this Contract, or to occupy and use a portion of the Work, prior to the date of the final acceptance of the Work as a whole, without in any way relieving Contractor of any obligations under this Contract.

13. NO WAIVER OF REMEDIES

Neither the inspection by City, its officers, employees or agents, nor any certificate or other approval for the payment of money, nor any payment for, nor acceptance of the whole or any part of the Work by City, nor any extensions of time, nor any position taken by City, its officers, employees or its agents shall operate as a waiver of any provision of the Contract Documents nor of any power herein reserved to City or any right to damages herein provided, nor shall any waiver of any breach of this Agreement be held to be a waiver of any other or subsequent breach. All remedies provided in the Contract Documents shall be taken and construed as cumulative; in addition to each and every other remedy herein provided, the City shall have any and all equitable and legal remedies that it would in any case have.

14. WARRANTY

Except as otherwise expressly provided in the Contract Documents, and excepting only items of routine maintenance, ordinary wear and tear and unusual abuse or neglect by City, Contractor warrants and guarantees all Work executed and all supplies, materials and devices of whatsoever nature incorporated in or attached to the Work, or otherwise provided as a part of the Work pursuant to the Contract, to be absolutely free of all defects of workmanship and materials for a period of one year after final acceptance of the entire Work by the City. Contractor shall repair or replace all work or material, together with any other work or material that may be displaced or damaged in so doing, that may prove defective in workmanship or material within this one year warranty period without expense or charge of any nature whatsoever to City.

In the event that Contractor shall fail to comply with the conditions of the foregoing warranty within ten (10) days after being notified of the defect in writing, City shall have the right, but shall not be obligated, to repair, or obtain the repair of, the defect and Contractor shall pay to City on demand all costs and expense of such repair. Notwithstanding anything herein to the contrary, in the event that any defect in workmanship or material covered by the foregoing warranty results in a condition that constitutes an immediate hazard to public health or safety, or any property interest, or any person, City shall have the right to immediately repair, or cause to be repaired, such defect, and Contractor shall pay to City on demand all costs and expense of such repair. The foregoing statement relating to hazards to health, safety or property shall be deemed to include both temporary and permanent repairs that may be required as determined in the sole discretion and judgment of City.

In addition to the above, the Contractor shall make a written assignment of all manufacturer's and other product warranties to the City, prior to completion and final acceptance of the Work by City.

The Contractor's Performance Bond shall secure the performance of the Contractor's obligations under this Section 14, and the Contractor and its Surety shall be jointly and severally liable for these obligations.

15. LIQUIDATED DAMAGES IF WORK NOT COMPLETED ON TIME

(A) The actual fact of the occurrence of damages and the actual amount of the damages that City would suffer if the entire Work, and/or any specified portion thereof, were not completed within the time(s) specified herein are dependent upon many circumstances and conditions that could prevail in various combinations, and for this reason, it is impracticable and extremely difficult to fix the actual damages. Damages that City would suffer in the event of such delay include: loss of the use of the project; expenses of prolonged assignment to the project of an architectural and/or engineering staff; prolonged costs of administration, inspection, and supervision; increased operational expenses and/or impaired operation of other facilities dependent upon completion of the project; and the loss and inconvenience suffered by the public within the City of Sacramento by reason of the delay in the completion of the project or portion thereof. Accordingly, the parties agree, and by execution of this Agreement, Contractor acknowledges that it understands and agrees, that the amount(s) set forth herein as liquidated damages reflect the parties' best efforts at the time of entering into the Contract to estimate the damages that may be incurred by City and the public due to the Contractor's delay in completion of the Work and/or any specified portion thereof, and shall be presumed to be the amount of damages sustained by the failure of Contractor to complete the entire Work and/or any specified portion thereof within the time(s) specified herein.

(B) Contractor shall pay liquidated damages to City for failure to complete the entire Work by the Completion Date (as extended in accordance with the Contract Documents, if applicable) in the amount of **five hundred dollars ($500.00) for each calendar day** for each calendar day after the Completion Date (as extended in accordance with the Contract Documents, if applicable), continuing to the time at which the entire Work is completed. Such amount is the actual cash value agreed upon by the City and Contractor as the loss to City and the public resulting from Contractor's default.

The parties agree, and by execution of this Agreement, Contractor acknowledges that it understands and agrees, that the foregoing provisions provide for the imposition of liquidated damages from the Completion Date (as extended in accordance with the Contract Documents, if applicable) until the date of completion of the entire Work as determined by the Engineer in accordance with Section 8-4 of the Standard Specifications, whether or not the Work or any portion thereof is claimed or determined to be substantially complete prior to such date of completion.

(C) In the event Contractor shall become liable for liquidated damages, City, in addition to all other remedies provided by law, shall have the right to withhold any and all payments that otherwise would be or become due Contractor until the liability of Contractor under this section is finally determined. City shall have the right to use and apply such payments, in whole or in part, to reimburse City for all liquidated damages due or to become due to City. Any remaining balance of such payments shall be paid to Contractor only after discharge in full of all liability incurred by Contractor under this section or otherwise under any provision of the Contract Documents or any applicable Law or Regulation. If the sum so retained by City is not sufficient to discharge all such liabilities of Contractor, Contractor shall continue to remain liable to City until all such liabilities are satisfied in full. No failure by City to withhold any payment as specified above shall in any manner be construed to constitute a release of any such liabilities nor a waiver of the City's right to withhold payment for such liabilities.

16. INDEMNITY AND HOLD HARMLESS

(A) Contractor shall defend, hold harmless and indemnify the City, its officers, employees, and agents, and each and every one of them, from and against any and all actions, damages, costs, liabilities, claims, demands, losses, judgments, penalties, costs and expenses of every type and description, whether arising on or off the site of the Work, including, but not limited to, any fees and/or costs reasonably incurred by City's staff attorneys or outside attorneys and any fees and expenses incurred in enforcing this provision (hereafter collectively referred to as "Liabilities"), including but not limited to Liabilities arising from personal injury or death, damage to personal, real or intellectual property or the environment, contractual or other economic damages, or regulatory penalties, arising out of or in any way connected with performance of or failure to perform the Work by the Contractor, any subcontractor or agent, anyone directly or indirectly employed by any of them or anyone for whose acts any of them may be liable, whether or not (i) such Liabilities are caused in part by a party indemnified hereunder, or (ii) such Liabilities are litigated, settled or reduced to judgment; provided that the foregoing indemnity does not apply to liability for damages for death or bodily injury to persons, injury to property, or other loss, damage or expense to the extent arising from (i) the sole negligence or willful misconduct of, or defects in design furnished by, City, its agents, servants, or independent contractors who are directly responsible to City, or (ii) the active negligence of City.

(B) The existence or acceptance by City of any of the insurance policies or coverages described in this Agreement shall not affect or limit any of City's rights under this Section 16, nor shall the limits of such insurance limit the liability of Contractor hereunder. The provisions of this Section 16 shall survive any expiration or termination of the Contract.

17. CONTRACTOR SHALL ASSUME RISKS

Until the completion and final acceptance by City of all Work under this Contract, the Work shall be under Contractor's responsible care and charge, and Contractor, at no cost to City, shall rebuild, repair, restore and make good all injuries, damages, re-erections, and repairs occasioned or rendered necessary by accidental causes of any nature, to all or any portions of the Work.

18. GENERAL LIABILITY OF CONTRACTOR

Except as otherwise herein expressly stipulated, Contractor shall perform all the Work and furnish all the labor, materials, tools, equipment, apparatus, facilities, transportation, power and light, and appliances, necessary or proper for performing and completing the Work herein required in the manner and within the time herein specified. The mention of any specific duty or liability of Contractor shall not be construed as a limitation or restriction of any general liability or duty of Contractor, and any reference to any specific duty or liability shall be construed to be solely for the purpose of explanation.

19. INSURANCE

During the entire term of this Contract and until completion and final acceptance of the Work as provided in the Contract Documents, Contractor shall maintain in full force and effect the insurance coverage described in this section.

Full compensation for all premiums that Contractor is required to pay for the insurance coverage described herein shall be included in the compensation specified for performance of the Work under the Contract. No additional compensation will be provided for Contractor's insurance premiums.

It is understood and agreed by the Contractor that its liability to the City shall not in any way be limited to or affected by the amount of insurance coverage required of or carried by the Contractor.

(A) Minimum Scope and Limits of Insurance Coverage

(1) Commercial General Liability Insurance, providing coverage at least as broad as ISO CGL Form 00 01 on an occurrence basis for bodily injury, including death, of one or more persons, property damage and personal injury, with limits of not less than one million dollars ($1,000,000) per occurrence. The policy shall provide contractual liability and products and completed operations coverage for the term of the policy.

(2) Automobile Liability Insurance providing coverage at least as broad as ISO Form CA 00 01 on an occurrence basis for bodily injury, including death, of one or more persons, property damage and personal injury, with limits of not less than one million dollars ($1,000,000) per occurrence. The policy shall provide coverage for owned, non-owned and/or hired autos as appropriate to the operations of the Contractor.

(3) Workers' Compensation Insurance with statutory limits, and Employers' Liability Insurance with limits of not less than one million dollars ($1,000,000). The Worker's Compensation policy shall include a waiver of subrogation.

(B) Additional Insured Coverage

(1) Commercial General Liability Insurance: The City, its officials, employees and volunteers shall be covered by policy terms or endorsement as additional insureds as respects general liability arising out of activities performed by or on behalf of Contractor, products and completed operations of Contractor, and premises owned, leased or used by Contractor. The general liability additional insured endorsement must be signed by an authorized representative of the insurance carrier.

If the policy includes a blanket additional insured endorsement or contractual additional insured coverage, the above signature requirement may be fulfilled by submitting that document with a signed declaration page referencing the blanket endorsement or policy form.

(2) Automobile Liability Insurance: The City, its officials, employees and volunteers shall be covered by policy terms or endorsement as additional insureds as respects auto liability.

(C) Other Insurance Provisions

The policies are to contain, or be endorsed to contain, the following provisions:

(1) Contractor's insurance coverage shall be primary insurance as respects City, its officials, employees and volunteers. Any insurance or self-insurance maintained by City, its officials, employees or volunteers shall be in excess of Contractor's insurance and shall not contribute with it.

(2) Any failure to comply with reporting provisions of the policies shall not affect coverage provided to City, its officials, employees or volunteers.

(3) Coverage shall state that Contractor's insurance shall apply separately to each insured against whom claim is made or suit is brought, except with respect to the limits of the insurer's liability.

(4) City will be provided with thirty (30) days written notice of cancellation or material change in the policy language or terms.

(D) Acceptability of Insurance

Insurance shall be placed with insurers with a Bests' rating of not less than A:V. Self-insured retentions, policy terms or other variations that do not comply with the requirements of this Section 19 must be declared to and approved by the City Risk Management Division in writing prior to execution of this Agreement.

(E) Verification of Coverage

(1) Contractor shall furnish City with certificates and required endorsements evidencing the insurance required. The certificates and endorsements shall be forwarded to the City representative designated by City. Copies of policies shall be delivered to the City on demand. Certificates of insurance shall be signed by an authorized representative of the insurance carrier.

(2) The City may withdraw its offer of contract or cancel the Contract if the certificates of insurance and endorsements required have not been provided prior to execution of this Agreement. The City may withhold payments to Contractor and/or cancel the Contract if the insurance is canceled or Contractor otherwise ceases to be insured as required herein.

(F) Subcontractors

Contractor shall require and verify that all subcontractors maintain insurance coverage that meets the minimum scope and limits of insurance coverage specified in subsection A, above.

20. FAILURE TO MAINTAIN BONDS OR INSURANCE

If, at any time during the performance of this Contract, Contractor fails to maintain any item of the bonds and/or insurance required under the Contract in full force and effect, Contractor shall immediately suspend all work under the Contract and notify City in writing of such failure. After such notice is provided, or if City discovers such failure and notifies Contractor, the City thereafter may withhold all Contract payments due or that become due until notice is received by City that such bonds and/or insurance have been restored in full force and effect and that the premiums therefor have been paid for a period satisfactory to the Division of Risk Management. Contractor shall not resume work until notified by City to do so, and the City shall have no responsibility or liability for any costs incurred by Contractor as a result of such suspension of Work.

In addition to the foregoing, any failure to maintain any item of the required bonds and/or insurance at any time during the performance of this Contract will be sufficient cause for termination of the Contract by City.

The Contractor shall be solely responsible for, and shall defend, indemnify and hold harmless the City, its officers, employees and agents against and from, any and all damages, claims, losses, actions, costs or other expenses of any kind incurred by any party as a direct or indirect result of any suspension of Work or termination of the Contract under the provisions of this Section.

21. EXCUSABLE DELAYS

For the purpose of these Contract Documents, the term "Excusable Delay" shall mean, and is limited to, delay caused directly by: acts of God; acts of a public enemy; fires; inclement weather as determined by the Engineer; riots; insurrections; epidemics; quarantine restrictions; strikes; lockouts; sitdowns; acts of a governmental agency; priorities or privileges established for the manufacture, assemble, or allotment of materials necessary in the Work by order, decree or otherwise of the United States or by any department, bureau, commission, committee, agent, or administrator of any legally

constituted public authority; changes in the Work ordered by City insofar as they necessarily require additional time in which to complete the Work; the prevention of Contractor from commencing or prosecuting the Work because of the acts of others, excepting Contractor's subcontractors or suppliers; or the prevention of Contractor from commencing or prosecuting the Work because of a Citywide failure of public utility service.

The term "Excusable Delay" shall specifically not include: (i) any delay that could have been avoided by the exercise of care, prudence, foresight and diligence on the part of Contractor; (ii) any delay in the prosecution of any part of the Work that does not constitute a Controlling Operation, whether or not such delay is unavoidable; (iii) any reasonable delay resulting from time required by City for review of any Contractor submittals and for the making of surveys, measurements and inspection; and, (iv) any delay arising from an interruption in the prosecution of the Work on account of reasonable interference by other Contractors employed by City that does not necessarily prevent the completion of the entire Work within the time specified. Excusable Delays, if any, shall operate only to extend the Completion Date (not in excess of the period of such delay as determined by City) and shall not under any circumstances increase the amount City is required to pay Contractor except as otherwise provided in these Contract Documents.

22. CONTRACTOR TO SERVE NOTICE OF DELAYS

Whenever Contractor foresees any delay in the prosecution of the Work, and in any event as soon as possible (not to exceed a period of ten (10) calendar days) after the initial occurrence of any delay that Contractor regards as or may later claim to be an Excusable Delay, the Contractor shall notify the Engineer in writing of such delay and its cause, in order that the Engineer: (i) may take immediate steps to prevent if possible the occurrence or continuance of the delay; or (ii) if this cannot be done, may determine whether the delay is to be considered excusable, how long it continues, and to what extent the prosecution and completion of the Work are delayed thereby. Said written notice shall constitute an application for an extension of time only if the notice requests such an extension and sets forth the Contractor's estimate of the additional time required together with a full description of the cause of the delay relied upon.

After the completion of any part or whole of the Work, the Engineer, in estimating the amount due Contractor, will assume that any and all delays that may have occurred in its prosecution and completion were not Excusable Delays, except for such delays for which the Contractor has provided timely written notice as required herein, and that the Engineer has found to be excusable. Contractor shall not be entitled to claim Excusable Delay for any delay for which the Contractor failed to provide such timely written notice.

23. EXTENSION OF TIME

If the Contractor complies with Section 22, above, and the Engineer finds a delay claimed by the Contractor to be an Excusable Delay, the Contractor shall be allowed an extension of time to complete the Work that is proportional to the period of Excusable Delay determined by the Engineer, subject to the approval by City of a change order granting such time extension. During a duly authorized extension for an Excusable Delay, City shall not charge liquidated damages against the Contractor for such delay.

If the City extends the time to complete the Work as provided herein, such extension shall in no way release any warranty or guarantee given by Contractor pursuant to the provisions of the Contract Documents, nor shall such extension of time relieve or release the sureties of the Bonds provided pursuant to the Contract Documents. By executing such Bonds, the Sureties shall be deemed to have expressly agreed to any such extension of time. The granting of any extension of time as provided herein shall in no way operate as a waiver on the part of City of its rights under this Contract, excepting only extension of the Completion Date for such period of Excusable Delay as may be determined by the Engineer and approved by a duly authorized change order.

24. NO PAYMENT FOR DELAYS

No damages or compensation of any kind shall be paid to Contractor or any subcontractor because of delays in the progress of the Work whether or not such delays qualify for extension of time under this Agreement; except that this provision shall not preclude the recovery of damages for a delay caused by the City that is unreasonable under the circumstances and that is not within the contemplation of the parties, provided that the Contractor timely submits all such written notice(s) and fully complies with such other procedures as may be specified in the Contract Documents or any Laws or Regulations for Contractor to claim damages for such delay.

25. CHANGES IN THE WORK

Changes in the Work authorized or directed in accordance with the Contract Documents and extensions of time of completion made necessary by reason thereof shall not in any way release any warranty or guarantee given by Contractor pursuant to the provisions of the Contract Documents, nor shall such changes in the Work relieve or release the Sureties on Bonds provided pursuant to the Contract Documents. By executing such Bonds, the Sureties shall be deemed to have expressly agreed to any such change in Work and to any extension of time made by reason thereof.

26. TERMINATION AFTER COMPLETION DATE

In addition to any other rights City may have, if any services or work required under the Contract (including but not limited to punch list items) are not completed as of the Completion Date (as adjusted by any extensions of time for Excusable Delays granted pursuant to the Contract Documents), City may terminate the Contract at any time after the Completion Date (as adjusted by any extensions of time for Excusable Delays granted pursuant to the Contract Documents), by providing a written notice to Contractor specifying the date of termination. Such notice also may specify conditions or requirements that Contractor must meet to avoid termination of the Contract on such date. If Contractor fails to fulfill all such conditions and requirements by such termination date, or, if no such conditions or requirements are specified, Contractor shall cease rendering services and performing work on such termination date, and shall not be entitled to receive any compensation for services rendered or work performed after such termination date. In the event of such termination, Contractor shall remain liable to City for liquidated damages incurred for any period of time prior to the termination date.

In addition to any other charges, withholdings or deductions authorized under the Contract or any Laws or Regulations, if City terminates the Contract pursuant to this section, City may withhold and deduct from any payment and/or retention funds otherwise due Contractor any sum necessary to pay the City's cost of completing or correcting, or contracting for the completion or correction of, any services or work under the Contract that are not completed to the satisfaction of the City or that otherwise are deficient or require correction as of such termination date, including but not limited to incomplete punch list items. Such costs shall include all of the City’s direct and indirect costs incurred to complete or correct such services or work, including the City’s administrative and overhead costs. If the amount of payment(s) and/or retention funds otherwise due the Contractor are insufficient to pay such costs, City shall have the right to recover the balance of such costs from the Contractor and/or its Surety(ies).

27. TERMINATION FOR CONVENIENCE

Upon written notice to the Contractor, the City may at any time, without cause and without prejudice to any other right or remedy of the City, elect to terminate the Contract for the convenience of City. In such case, the Contractor shall be paid (without duplication of any items, and after deduction and/or withholding of any amounts authorized to be deducted or withheld by the Contract Documents or any Laws or Regulations):

(A) For Work executed in accordance with the Contract Documents prior to the effective date of termination and determined to be acceptable by the Engineer, including fair and reasonable sums for overhead and profit on such Work;

(B) For reasonable claims, costs, losses, and damages incurred in settlement of terminated contracts with subcontractors, suppliers, and others; and

(C) For reasonable expenses directly attributable to termination.

Contractor shall not be paid for any loss of anticipated profits or revenue for any Work not performed prior to termination, nor for any economic loss arising out of or resulting from such termination, except for the payments listed in this section. Contractor's warranty under Section 14 of this Agreement shall apply, and Contractor shall remain responsible for all obligations related to such warranty, with respect to all portions of the Work performed prior to the effective date of the termination for convenience pursuant to this section. The City shall be entitled to have any or all remaining Work performed by other contractors or by any other means at any time after the effective date of a termination for convenience pursuant to this section.

28. TERMINATION FOR BREACH OF CONTRACT

If Contractor abandons the Work under this Contract, or if the Contract or any portion of the Contract is sublet or assigned without the consent of the City, or if the Engineer determines in the Engineer's sole discretion that the conditions of the Contract in respect to the rate of progress of the Work are not being fulfilled or any part thereof is unnecessarily delayed, or if Contractor violates or breaches, or fails to execute in good faith, any of the terms or conditions of the Contract, or if Contractor refuses or fails to supply enough properly skilled labor or materials or refuses or fails to make prompt payment to subcontractors for material or labor, or if Contractor disregards any Laws or Regulations or proper instruction or orders of the Engineer, then, notwithstanding any provision to the contrary herein, the City may give Contractor and its Sureties written notification to immediately correct the situation or the Contract shall be terminated.

In the event that such notice is given, and, in the event such situation is not corrected, or arrangements for correction satisfactory to the City are not made, within ten (10) calendar days from the date of such notice or within such other period of time as may be specified by the City in the notice, the Contract shall upon the expiration of said period cease and terminate. In the event of any such termination, City may take over the Work and prosecute the Work to completion, or otherwise, and the Contractor and its Sureties shall be liable to City for any cost occasioned City thereby, as hereinafter set forth.

In the event City completes the Work, or causes the Work to be completed, no payment of any kind shall be made to Contractor until the Work is complete. The cost of completing the Work, including but not limited to, extra costs of project administration and management incurred by City, both direct or indirect, shall be deducted from any sum then due, or that becomes due, to Contractor from City. If sums due to Contractor from City are less than the cost of completing the Work, Contractor and its Sureties shall pay City a sum equal to this difference on demand. In the event City completes the Work, and there is a sum remaining due to Contractor after City deducts the costs of completing the Work, then City shall pay such sum to Contractor. The Contractor and Contractor's Sureties shall be jointly and severally liable for all obligations imposed on Contractor hereunder.

No act by City before the Work is finally accepted, including, but not limited to, exercise of other rights under the Contract, actions at law or in equity, extensions of time, payments, assessments of liquidated damages, occupation or acceptance of any part of the Work, waiver of any prior breach of the Contract or failure to take action pursuant to this section upon the happening of any prior default or breach of Contractor, shall be construed to be a waiver or estoppel of the City's right to act pursuant to this Section upon any subsequent event, occurrence or failure by Contractor to fulfill the terms and conditions of the Contract. The rights of City to terminate the Contract pursuant to this Section and

pursuant to Sections 26 and 27 are cumulative and are in addition to all other rights of City pursuant to the Contract and at law or in equity.

29. CONTRACTOR BANKRUPT

If Contractor should commence any bankruptcy proceeding, or if Contractor is adjudged a bankrupt, or if Contractor makes any assignment for the benefit of creditors, or if a receiver is appointed on account of Contractor's insolvency, then the City may, without prejudice to any other right or remedy, terminate the Contract and complete the work by giving notice as provided in Section 28 above.

30. SURETIES' OBLIGATIONS UPON TERMINATION

If the City terminates the Contract pursuant to Section 28 or Section 29 above:

(A) The Surety under Contractor's performance bond shall be fully responsible for all of the Contractor's remaining obligations of performance under the Contract as if the Surety were a party to the Contract, including without limitation Contractor's obligations, as provided in the Contract Documents, to complete and provide a one-year warranty of the entire Work, pay liquidated damages and indemnify, defend and hold harmless City, up to the full amount of the performance bond.

(B) The Surety under Contractor's payment bond shall be fully responsible for the performance of all of the Contractor's remaining payment obligations for work, services, equipment or materials performed or provided in connection with the Work or any portion thereof, up to the full amount of the payment bond.

31. ACCOUNTING RECORDS OF CONTRACTOR

During performance of the Contract and for a period of three (3) years after completing the entire Work, Contractor shall maintain all accounting and financial records related to the Contract and performance of the Work in accordance with generally accepted accounting practices, and shall keep and make such records available for inspection and audit by representatives of the City upon reasonable written notice.

32. USE TAX REQUIREMENTS

During the performance of this Agreement, CONTRACTOR, for itself, its assignees and successors in interest, agrees as follows:

(A) Use Tax Direct Payment Permit: For all leases and purchases of materials, equipment, supplies, or other tangible personal property used to perform the Agreement and shipped from outside California, the Contractor and any subcontractors leasing or purchasing such materials, equipment, supplies or other tangible personal property shall obtain a Use Tax Direct Payment Permit from the California State Board of Equalization ("SBE") in accordance with the applicable SBE criteria and requirements.

(B) Sellers Permit: For any construction contract and any construction subcontract in the amount of $5,000,000 or more, Contractor and the subcontractor(s) shall obtain sellers permits from the SBE and shall register the jobsite as the place of business for the purpose of allocating local sales and use tax to the City. Contractor and its subcontractors shall remit the self-accrued use tax to the SBE, and shall provide a copy of each remittance to the City.

(C) The above provisions shall apply in all instances unless prohibited by the funding source for the Agreement.

IN WITNESS WHEREOF, the parties hereto have signed this Agreement on the date set for opposite their names.

CONTRACTOR

Under penalty of perjury, I certify that the taxpayer identification number and all other information provided here are correct.

DATE _____

BY_____

_____
Print Name

_____
Title

BY_____

_____
Print Name

_____
Title

_____
Federal ID#

_____
State ID#

_____
City of Sacramento Business Operation Tax Certificate No. (City will not award contract until Certificate Number is obtained)

Type of Business Entity *(check one)*:
_____ Individual/Sole Proprietor
_____ Partnership
_____ Corporation
_____ Limited Liability Company
_____Other (*please specify:*_____)

CITY OF SACRAMENTO
a municipal corporation

DATE _____

BY _____

For: John F. Shirey,
City Manager – City of Sacramento

Original Approved As To Form:

_____
City Attorney

Attest:

_____
City Clerk

CITY OF SACRAMENTO **Bond #:_____**
PERFORMANCE BOND **Premium: _____**
Department of Utilities

WHEREAS, the City of Sacramento, in the State of California, hereinafter called City has conditionally awarded to (*here insert full name and address of Contractor)*:

as principal, hereinafter called Contractor, an agreement for construction of:

OAK PARK & COLONIAL HEIGHTS WATER IMPROVEMENTS
(PN: Z14010069) (B15141321002)

in accordance with the plans, specifications, drawings, conditions, and project manual prepared therefore, which agreement is by reference made a part hereof, and is hereinafter referred to as the Contract; and

WHEREAS, under the terms of the Contract, Contractor is required to furnish a bond for the faithful performance of the Contract.

NOW, THEREFORE, we the Contractor and (*here insert full name and address of Surety*):

_____, a corporation duly authorized and admitted to transact business and issue surety bonds in the State of California, hereinafter called Surety, are held and firmly bound unto the City, as obligee, in the sum of _____DOLLARS $_____), for the payment of which sum well and truly to be made, we the Contractor and Surety bind ourselves, our heirs, executors, administrators, successors and assigns, jointly and severally. The condition of this obligation is such that, if the Contractor, Contractor's heirs, executors, administrators, successors, or assigns, shall in all things stand to and abide by, and well and truly keep and fully perform all covenants, conditions and agreements required to be kept and performed by Contractor in the Contract and any changes, additions or alterations made thereto, to be kept and performed at the time and in the manner therein specified, and in all respects according to their true intent and meanings, and shall indemnify and save harmless the City, its officers, employees and agents, as therein provided, then this obligation shall be null and void; otherwise shall be and remain in full force and effect. This obligation shall remain in full force and effect until (1) the date that the Contractor no longer has any remaining obligation of performance under the Contract, or (2) the date that is one year after the date that the work to be performed under the Contract is accepted as complete by the City, whichever occurs later.

As part of the obligation secured hereby and in addition to the sum specified above, there shall be included all costs, expenses and fees, including attorney's fees, reasonably incurred by City in successfully enforcing such obligation, all to be taxed as costs and included in any judgement rendered.

The Surety, for value received, hereby stipulates and agrees that no change, extension of time, alteration or addition to the terms of the Contract, or to the work to be performed thereunder, or to the specifications accompanying the same, shall in any way affect its obligations on this bond, and it does hereby waive notice of any such change, extension, alteration or addition.

IN WITNESS WHEREOF, this instrument has been duly executed by authorized representatives of the Contractor and Surety.
SIGNED AND SEALED on _____, 2014.

_____
(Contractor) (Seal)

By _____

Title _____

ORIGINAL APPROVED AS TO FORM:

_____
City Attorney

_____
(Surety) (Seal)

By _____

Title _____
Agent Name and Address _____

_____
Agent Phone # _____
Surety Phone # _____
California License # _____
Surety Email: _____

CITY OF SACRAMENTO
PAYMENT BOND
Department of Utilities

Bond No: _____
Premium: _____

WHEREAS, the City of Sacramento, in the State of California, hereinafter called City, has conditionally awarded to:

hereinafter called Contractor, a contract for construction of:

OAK PARK & COLONIAL HEIGHTS WATER IMPROVEMENTS
(PN: Z14010069) (B15141321002)

Which contract is by reference incorporated herein and made a part hereof, and is hereinafter referred to as the Contract; and

WHEREAS, under the terms of the Contract and pursuant to Chapter 5 of Title 3 of Part 6 of Division 4 of the California Civil Code (commencing with Civil Code Section 9550), Contractor is required to furnish a good and sufficient payment bond to secure payment of the claims to which reference is made in Civil Code Section 9554.

NOW, THEREFORE, we the Contractor and (*here insert full name and address of Surety*):

_____ , a corporation a corporation duly authorized and admitted to transact business and issue surety bonds in the State of California, hereinafter called Surety, are held and firmly bound unto the City, and unto all persons or entities entitled to assert a claim against a payment bond under any of the aforesaid Civil Code provisions in the sum of _____DOLLARS ($_____), on the condition that if Contractor shall fail to pay for any materials or equipment furnished or used in performance of the Contract, or for any work or labor thereon of any kind, or for amounts due under the Unemployment Insurance Act with respect to such work or labor, or for any amounts required to be deducted, withheld, and paid over to the Franchise Tax Board or the Employment Development Department from the wages of employees of the Contractor and all subcontractors with respect to such work or labor, then the Surety shall pay the same in an amount not exceeding the sum specified above. If suit is brought upon this bond, Surety shall pay, in addition to the above sum, all costs, expenses and fees, including attorney's fees, reasonably incurred by any party in successfully enforcing the obligation secured hereby, all to be taxed as costs and included in any judgment rendered. Should the condition of this bond be fully performed, then this obligation shall become null and void, otherwise it shall be and remain in full force and effect, and shall bind Contractor, Surety, their heirs, executors, administrators, successors and assigns, jointly and severally.

It is hereby stipulated and agreed that this bond shall inure to the benefit of all persons, companies, corporations, political subdivisions, State agencies and other entities entitled to assert a claim against a payment bond under any of the aforesaid Civil Code provisions, so as to give a right of action to them or their assigns in any suit brought upon this bond. The Surety, for value received, hereby stipulates and agrees that no change, extension of time, alteration or addition to the terms of the Contract or to the work to be performed thereunder or to the specifications accompanying the same shall in any way affect its obligations on this bond, and it does hereby waive notice of any such change, extension, alteration or addition.

IN WITNESS WHEREOF, this instrument has been duly executed by authorized representatives of the Contractor and Surety.
SIGNED AND SEALED on _____ 2014.

_____
(Contractor) (Seal)

By _____

Title _____

ORIGINAL APPROVED AS TO FORM:

_____
City Attorney

_____
(Surety) (Seal)

By _____

Title _____
Agent Name and Address _____

_____
Agent Phone # _____
Surety Phone # _____
California License # _____
Surety Email: _____

Effective 7-1-12

CALFIRONIA LABOR CODE RELATING TO APPRENTICES ON PUBLIC WORKS PROJECTS

See following links: www.dir.ca.gov and/or www.leginfo.ca.gov

Form **W-9**
(Rev. August 2013)
Department of the Treasury
Internal Revenue Service

Request for Taxpayer Identification Number and Certification

Give Form to the requester. Do not send to the IRS.

Print or type
See Specific Instructions on page 2.

Name (as shown on your income tax return)

Business name/disregarded entity name, if different from above

Check appropriate box for federal tax classification:
☐ Individual/sole proprietor ☐ C Corporation ☐ S Corporation ☐ Partnership ☐ Trust/estate

☐ Limited liability company. Enter the tax classification (C=C corporation, S=S corporation, P=partnership) ▶

☐ Other (see instructions) ▶

Exemptions (see instructions):
Exempt payee code (if any)
Exemption from FATCA reporting code (if any)

Address (number, street, and apt. or suite no.)

Requester's name and address (optional)

City, state, and ZIP code

List account number(s) here (optional)

Part I Taxpayer Identification Number (TIN)

Enter your TIN in the appropriate box. The TIN provided must match the name given on the "Name" line to avoid backup withholding. For individuals, this is your social security number (SSN). However, for a resident alien, sole proprietor, or disregarded entity, see the Part I instructions on page 3. For other entities, it is your employer identification number (EIN). If you do not have a number, see *How to get a TIN* on page 3.

Note. If the account is in more than one name, see the chart on page 4 for guidelines on whose number to enter.

Social security number
☐☐☐ – ☐☐ – ☐☐☐☐

Employer identification number
☐☐ – ☐☐☐☐☐☐☐

Part II Certification

Under penalties of perjury, I certify that:

1. The number shown on this form is my correct taxpayer identification number (or I am waiting for a number to be issued to me), and
2. I am not subject to backup withholding because: (a) I am exempt from backup withholding, or (b) I have not been notified by the Internal Revenue Service (IRS) that I am subject to backup withholding as a result of a failure to report all interest or dividends, or (c) the IRS has notified me that I am no longer subject to backup withholding, and
3. I am a U.S. citizen or other U.S. person (defined below), and
4. The FATCA code(s) entered on this form (if any) indicating that I am exempt from FATCA reporting is correct.

Certification instructions. You must cross out item 2 above if you have been notified by the IRS that you are currently subject to backup withholding because you have failed to report all interest and dividends on your tax return. For real estate transactions, item 2 does not apply. For mortgage interest paid, acquisition or abandonment of secured property, cancellation of debt, contributions to an individual retirement arrangement (IRA), and generally, payments other than interest and dividends, you are not required to sign the certification, but you must provide your correct TIN. See the instructions on page 3.

Sign Here **Signature of U.S. person ▶** **Date ▶**

General Instructions

Section references are to the Internal Revenue Code unless otherwise noted.

Future developments. The IRS has created a page on IRS.gov for information about Form W-9, at *www.irs.gov/w9*. Information about any future developments affecting Form W-9 (such as legislation enacted after we release it) will be posted on that page.

Purpose of Form

A person who is required to file an information return with the IRS must obtain your correct taxpayer identification number (TIN) to report, for example, income paid to you, payments made to you in settlement of payment card and third party network transactions, real estate transactions, mortgage interest you paid, acquisition or abandonment of secured property, cancellation of debt, or contributions you made to an IRA.

Use Form W-9 only if you are a U.S. person (including a resident alien), to provide your correct TIN to the person requesting it (the requester) and, when applicable, to:

1. Certify that the TIN you are giving is correct (or you are waiting for a number to be issued),
2. Certify that you are not subject to backup withholding, or
3. Claim exemption from backup withholding if you are a U.S. exempt payee. If applicable, you are also certifying that as a U.S. person, your allocable share of any partnership income from a U.S. trade or business is not subject to the withholding tax on foreign partners' share of effectively connected income, and
4. Certify that FATCA code(s) entered on this form (if any) indicating that you are exempt from the FATCA reporting, is correct.

Note. If you are a U.S. person and a requester gives you a form other than Form W-9 to request your TIN, you must use the requester's form if it is substantially similar to this Form W-9.

Definition of a U.S. person. For federal tax purposes, you are considered a U.S. person if you are:

- An individual who is a U.S. citizen or U.S. resident alien,
- A partnership, corporation, company, or association created or organized in the United States or under the laws of the United States,
- An estate (other than a foreign estate), or
- A domestic trust (as defined in Regulations section 301.7701-7).

Special rules for partnerships. Partnerships that conduct a trade or business in the United States are generally required to pay a withholding tax under section 1446 on any foreign partners' share of effectively connected taxable income from such business. Further, in certain cases where a Form W-9 has not been received, the rules under section 1446 require a partnership to presume that a partner is a foreign person, and pay the section 1446 withholding tax. Therefore, if you are a U.S. person that is a partner in a partnership conducting a trade or business in the United States, provide Form W-9 to the partnership to establish your U.S. status and avoid section 1446 withholding on your share of partnership income.

YEAR

CALIFORNIA FORM

2014 Withholding Exemption Certificate 590

The payee completes this form and submits it to the withholding agent.

Withholding Agent (Type or print)

Name

Payee

Name ☐ SSN or ITIN ☐ FEIN ☐ CA Corp no. ☐ CA SOS file no.

Address (apt./ste., room, PO Box, or PMB no.)

City (If you have a foreign address, see instructions.) | State | ZIP Code

Exemption Reason

Check only one reason box below that applies to the payee.

By checking the appropriate box below, the Payee certifies the reason for the exemption from the California income tax withholding requirements on payment(s) made to the entity or individual.

☐ **Individuals — Certification of Residency:**
I am a resident of California and I reside at the address shown above. If I become a nonresident at any time, I will promptly notify the withholding agent. See instructions for General Information D, Definitions.

☐ **Corporations:**
The corporation has a permanent place of business in California at the address shown above or is qualified through the California Secretary of State (SOS) to do business in California. The corporation will file a California tax return. If this corporation ceases to have a permanent place of business in California or ceases to do any of the above, I will promptly notify the withholding agent. See instructions for General Information D, Definitions.

☐ **Partnerships or limited liability companies (LLCs):**
The partnership or LLC has a permanent place of business in California at the address shown above or is registered with the California SOS, and is subject to the laws of California. The partnership or LLC will file a California tax return. If the partnership or LLC ceases to do any of the above, I will promptly inform the withholding agent. For withholding purposes, a limited liability partnership (LLP) is treated like any other partnership.

☐ **Tax-Exempt Entities:**
The entity is exempt from tax under California Revenue and Taxation Code (R&TC) Section 23701 _____ (insert letter) or Internal Revenue Code Section 501(c) _____ (insert number). If this entity ceases to be exempt from tax, I will promptly notify the withholding agent. Individuals cannot be tax-exempt entities.

☐ **Insurance Companies, Individual Retirement Arrangements (IRAs), or Qualified Pension/Profit Sharing Plans:**
The entity is an insurance company, IRA, or a federally qualified pension or profit-sharing plan.

☐ **California Trusts:**
At least one trustee and one noncontingent beneficiary of the above-named trust is a California resident. The trust will file a California fiduciary tax return. If the trustee or noncontingent beneficiary becomes a nonresident at any time, I will promptly notify the withholding agent.

☐ **Estates — Certification of Residency of Deceased Person:**
I am the executor of the above-named person's estate or trust. The decedent was a California resident at the time of death. The estate will file a California fiduciary tax return.

☐ **Nonmilitary Spouse of a Military Servicemember:**
I am a nonmilitary spouse of a military servicemember and I meet the Military Spouse Residency Relief Act (MSRRA) requirements. See instructions for General Information E, MSRRA.

CERTIFICATE OF PAYEE: Payee must complete and sign below.

Under penalties of perjury, I hereby certify that the information provided in this document is, to the best of my knowledge, true and correct. If conditions change, I will promptly notify the withholding agent.

Payee's name and title (type or print) _____ Telephone (_____)_____

Payee's signature ▶ _____ Date _____

SPECIAL PROVISIONS

SPECIAL PROVISIONS FOR
OAK PARK & COLONIAL HEIGHTS
WATER IMPROVEMENTS
(PN: Z14010069)

Table of Contents

Section 1 – General Construction Requirements
1.01 Scope of Work 1-1
1.02 Specifications 1-1
1.03 Interpretation of Contract Documents 1-1
1.04 Governing Documents 1-2
1.05 Shop Drawings and Submittals 1-2
1.06 Project Signs 1-3
1.07 Manufacturer's Instructions 1-3
1.08 Materials and Equipment 1-3
1.09 Proof of Compliance with Contract 1-3
1.10 Construction Activity Time Schedule 1-3
1.11 Weekly Updates 1-4
1.12 Personnel 1-4
1.13 Water Quality Control 1-4
1.14 Record Drawings 1-5
1.15 Permits 1-5
1.16 Definitions 1-5
1.17 Project Closeout 1-6
1.18 Permanent Survey Monuments 1-6
1.19 Administrative Penalty Ordinance 1-6
1.20 Daily Coordination 1-6
1.21 Payment 1-7

Section 2 – Public Convenience & Protection of Existing Conditions
2.01 Public Right-of-Way and Easements 2-1
2.02 Existing Utilities 2-1
2.03 Maintaining Water, Sewer, and Drainage Flows 2-1
2.04 Maintaining Electrical Facilities 2-2
2.05 Work Performed by City Crews 2-2
2.06 Maintenance of Traffic and Public Safety 2-2
2.07 Storage of Equipment and Materials 2-5
2.08 Public Notifications 2.5
2.09 Phasing of Construction Activities 2-5
2.10 Removal of On-Street Parking 2-6
2.11 Excavations on Private Property 2-6
2.12 Pavement Cutting and Surface Restoration 2-6
2.13 Trench Excavation and Backfill 2-7
2.14 Tree Preservation Requirements 2-7
2.15 Hazardous and Contaminated Materials 2-8
2.16 Payment 2-9

Section 3 - Water Construction Requirements
3.01 AWWA Standards - Water Mains 3-1

3.02 Opening Direction of Valves and Fire Hydrants 3-1
3.03 Disinfection and Pressure Testing of Water Mains..... 3-1
3.04 Distribution System Shutdowns for Water Mains 3-1
3.05 Water Shutdowns for Residential Water Service Tie-ins 3-2
3.06 Lead Free Materials 3-2
3.07 Plugged Fixtures 3-2
3.08 Construction of Residential Water services..... 3-2
3.09 Placement of Meter Boxes 3-3
3.10 Water Meters..... 3-4
3.11 City Supplied Materials 3-10
3.12 Meter Boxes and Lids 3-10
3.13 Contractor Source Documents 3-12
3.14 Dewatering 3-13
3.15 Payment 3-13

Section 4 – Items of the Proposal

Item No. 1 Mobilization..... 4-1
Item No. 2 Construction Photographs 4-1
Item No. 3 8 inch Water Main to Place 4-2
Item No. 4 8 inch Gate Valve to Install 4-2
Item No. 5 6 inch Gate Valve to Install 4-2
Item No. 6 Blow-off Valve to Install..... 4-3
Item No. 7 Fire Hydrant to Install 4-3
Item No. 8 Connection to Existing Water System..... 4-3
Item No. 9 Meter to Install 4-4
Item No. 10 Water Service to Install 4-4
Item No. 11 Meter Retrofit of 1 inch Water Service 4-5
Item No. 12 Meter Retrofit of 1½ inch Water Service 4-5
Item No. 13 Meter Retrofit of 2 inch Water Service 4-5
Item No. 14 Meter Retrofit of 4 inch Water Service 4-6
Item No. 15 Meter Retrofit of 6 inch Water Service 4-6
Item No. 16 Hybrid Water Service to Install (Front Hose Bib) 4-7
Item No. 17 Hybrid Water Service to Install (Rear Hose Bib) 4-7
Item No. 18 Substandard Water Service to Replace 4-8
Item No. 19 Water Mains and Fittings to Abandon 4-9
Item No. 20 Water Service to Abandon 4-10
Item No. 21 Concrete to Replace 4-10
Item No. 22 Asphaltic Concrete to Replace..... 4-11
Item No. 23 Unsuitable Material to Replace 4-12

APPENDIX

Appendix A: Project Address List
Appendix B: Water System Book Pages
Appendix C: Standard Detail Drawings
Measurement Examples
Appendix D: Sample Notification Letters
Sample Monthly Source Billing

SECTION 1. GENERAL CONSTRUCTION REQUIREMENTS

1.01 Scope of Work

These Special Provisions cover, in general, the replacement of water facilities in certain areas in and surrounding the Oak Park and Colonial Heights neighborhoods in Sacramento, CA. The work to be performed consists of placing water mains, services, valves, fire hydrants, meters, and associated work.

The Contractor shall provide all labor, materials, tools, and equipment, and shall perform all work necessary to complete the subject project in place and make all required connections to the existing water distribution system, including disinfection and pressure testing, as shown on the Plans and as specified herein.

1.02 Specifications

The work to be performed under this contract shall be done in accordance with the Special Provisions contained herein. In these Special Provisions, reference is made to the Standard Specifications of the City of Sacramento, adopted June 2007, referred to herein as "Standard Specifications".

The general requirements of this contract shall be governed by these Special Provisions first, followed by Sections 1 through 8 of the Standard Specifications. Other standards or specifications specified in these Special Provisions govern only the applicable technical specifications.

1.03 Interpretation of Contract Documents

Questions from bidder's concerning the interpretation of any portion of the contract documents may be directed to Sonia Lopez of the City of Sacramento, Department of Utilities, 1395 35th Ave, Sacramento, California, 95822, phone (916) 808-1456.

Interpretation, where necessary, will be made by the City in the form of an addendum to the contract documents and, when issued, will be sent as promptly as is practicable to all parties to whom the bid documents have been issued. All such addenda shall become part of the contract.

It shall also be the bidder's responsibility to call to the attention of the Engineer any missing pages or drawings in the contract documents, including the addenda. These items shall be brought to the attention of the Engineer at least seven (7) calendar days prior to the bid opening date.

1.04 Governing Documents

1) All work performed under this contract shall be in accordance with the following general requirements:
   a) Sealed Proposal
   b) Agreement
   c) Standard Specifications - Sections 1 through 8

2) All work performed under this contract shall be in accordance with the following provisions:
   a) Special Provisions
   b) Contract Plans
   c) Standard Specifications - Sections 10 through 38
   d) California Labor Code - Chapter 4 of Division 3

In the event of a conflict in the Contract Documents, the governing priorities, when appropriate, shall be in accordance with section 5-3 of the Standard Specifications.

1.05 Shop Drawings and Submittals

In accordance with Section 5-7 of the Standard Specifications, Contractor shall prepare and submit for review the following shop drawings:

1. Construction schedule
2. Phasing Plan
3. Traffic control plan
4. Proposed pipe materials and fittings
5. Gate valves
6. Fire hydrant assemblies
7. Meters (including registers)
8. Public notification information
9. Meter boxes and lids
10. Water quality control plan
11. Dewatering plan
12. Concrete mix design
13. Record drawings (upon completion of work)

Contractor is advised that at the Engineer's discretion, the above list may be expanded to include additional items to which Section 5-7 of the Standard Specifications will apply.

To achieve standardization of appearance, maintenance, and replacement, like items of materials provided under these Special Provisions shall be the end product of one manufacturer.

1.06 Project Signs

Prior to beginning any onsite work Contractor shall install one (1) project sign. The sign will be supplied by the City and is approximately 30 inches by 54 inches. In general, the sign shall be affixed to a 4”x4” post and installed a minimum of seven (7) feet and a maximum of ten (10) feet above surrounding grade. If acceptable to the Engineer an existing sign post may be used, otherwise, the Contractor shall be required to install a new post.

In addition, the Contractor will be provided two (2) small sign, approximately two (2) by three (3) feet in size. Sign shall be placed on barricades and located in the work area where only retrofits are being performed. Sign shall be removed at the end of each work day and placed accordingly on the next construction day.

All signs shall be removed at the end of the project and returned to the City. Posts installed by Contractor shall also be removed.

1.07 Manufacturer's Instructions

Contractor shall provide and comply with manufacturer's installation instructions and procedures in accordance with Section 5-16 of the Standard Specifications.

1.08 Materials and Equipment

All materials and supplies called for in these Special Provisions shall be new and currently manufactured items.

Contractor is responsible for the care and protection of all materials and equipment until the completion and final acceptance of the work, in accordance with Section 5 of the Standard Specifications and these Special Provisions.

1.09 Proof of Compliance with Contract

In order that the Engineer may determine whether the Contractor has complied with the requirements of the contract documents not readily determinable through inspection and tests of plant, equipment, work, or materials, the Contractor shall at any time when requested, at the Contractor's expense, submit to the Engineer properly authenticated documents or other satisfactory proofs as to his compliance with such requirements.

1.10 Construction Activity Time Schedule

The Contractor shall submit a detailed schedule showing the critical path relationship of all items of work a minimum of five (5) days before beginning work. The schedule shall be submitted, reviewed and updated in accordance with Section 7-2 of the Standard

Specifications. No progress payments will be made for work completed prior to acceptance of the schedule.

The activity time schedule shall indicate the chronological sequence in which the Contractor proposes to carry out each aspect of the work, the calendar dates on which the Contractor will begin the several salient elements of the work (procurement and delivery of materials, posting of “No Parking” signs, notification of property owners, scheduling of equipment, excavation of trenches, placement of pipe, etc.), and the contemplated dates for completing said salient elements.

The Contractor shall contact the Engineer at least forty-eight (48) hours in advance of any change in the work schedule. If the Contractor desires to make a major change in his method or operations after commencing construction, or if the activity time schedule fails to reflect the actual progress of the work, the Contractor shall submit a revised schedule to the Engineer in advance of beginning revised operations.

The schedule shall be updated every thirty (30) days, minimum.

1.11 Weekly Updates

Every Monday the Contractor shall submit to the Engineer an address list of the residential water service connections installed and/or connected the prior week and a list of addresses scheduled for installation for the following week.

To allow time and the opportunity to determine or adjust the new service diameter and location, the Contractor shall include potholing information in the weekly update. This shall include the address, existing service location and the existing diameter, and note if size changes at the point of proposed meter location. Potholing information shall be submitted to the engineer five (5) working days prior to installing the new service.

1.12 Personnel

Contractor shall maintain the same personnel throughout the duration of the work performed under this contract. Contractor may not change any crew member prior to completion of the work, unless approved in writing by the Engineer.

1.13 Water Quality Control

The Contractor is responsible for the requirements consisting of the regulations contained in the National Pollution Discharge Elimination System (NPDES) Stormwater Permit, issued to the City, and in accordance with Section 16 of the Standard Specifications. The Contractor shall prepare and submit for review an erosion, sediment and pollution control plan (ESC Plan). The Contractor shall not begin work until an accepted ESC Plan is on file with the Engineer. In addition, the approved plan shall be kept at the project site at all times while construction is in progress.

The City reserves the right to take corrective action and withhold the costs borne by the City for any corrective action performed from progress payments or final payment in accordance with Section 7, "Retention of Sums Charged against the Contractor", of the Agreement, contained herein. Any fines, including third-party claims, levied against the City as a result of the Contractor's non-compliance are the Contractor's sole responsibility and will be withheld from progress payments or final payment in accordance with Section 7, of the Agreement.

1.14 Record Drawings

Record drawings shall be in accordance with Section 5-8 of the Standard Specifications.

Record drawings shall include final layout and locations of all piping and conduit, and other facilities, including but not limited to: gate valves, fire hydrants, blow-offs, meters, piping material type. Examples of location descriptions can be found in Appendix C.

1.15 Permits

Contractor is hereby aware that the southern portion of 14th Avenue is County of Sacramento right-of-way. As such, Contractor shall secure permits necessary to encroach onto such right-of-way.

1.16 Definitions

For definitions not found herein refer to Section 1 of the Standard Specifications.

"Hybrid Water Service" shall consist of a one (1) inch service (including meter setter assembly) followed by 1½ inch diameter service materials on the private property side.

"Provide" shall mean furnish and install.

"Residential Water Service" shall mean the water service pipe and appurtenances from the property owner's side of the curb stop (or meter box) to and including all points of connection at the house.

"Retrofit" shall mean intercepting existing water service pipe, and placing metering appurtenances and a water meter box in accordance with these Special Provisions and the Plans.

"Water Distribution Personnel" shall mean an appointed representative from the Department of Utilities.

"Water Service Lateral" or "City Service" shall mean the water service pipe placed from the water main up to and including the curb stop (or meter setter).

1.17 Project Closeout

Project closeout and completion of work shall be in accordance with Section 8-4 of the Standard Specifications. When the Contractor provides notification that the project is complete, the Engineer will perform a walk through and develop a list of deficient work items. A completion report will be prepared after all punch list items have been completed, to the satisfaction of the Engineer, and as-built drawings are completed and submitted.

1.18 Permanent Survey Monuments

Contractor is responsible for verifying that the arrangements have been made for preserving and/or perpetuating all permanent survey monuments that will be affected by the work in accordance with Section 5-6 of the Standard Specifications.

1.19 Administrative Penalty Ordinance

The Contractor shall become familiar with Chapter 12.20 of the City Code which contains minimum requirements and restrictions relating to construction activities within City right-of-way and establishes administrative penalties for non-compliance of these requirements. The Contractor may be assessed the administrative penalty for each violation of any provision addressed by the ordinance, unless modified herein, and amounts can be deducted from the contract. The ordinance includes the following general categories:

A. Working hours for the City's "Primary Streets"
B. Traffic control plan requirements
C. Access to private property
D. Maintenance of construction areas
E. Repair of traffic control systems
F. Care of existing known facilities
G. Public notification
H. Noise levels
I. Administrative Penalties

Copies of the ordinance are available from the City Clerk's Office, 915 I Street, Sacramento, CA 95814 and at www.cityofsacramento.org.

1.20 Daily Coordination

In addition to the responsibilities detailed in Section 5-4 of the Standard Specifications, the Contractor shall meet with the Engineer daily. The purpose of the meetings is so that the Contractor and Engineer maintain close coordination between the pertinent aspects of the work. Discussion or coordination can be, but not limited to: projected work schedule, work completed, customer notifications, placement of meter boxes, type

of meter box to place at each property identified on the daily work schedule, valve placements and abandonments, scheduled concrete work, completed services per day, pay estimates.

1.21 Payment

Full compensation for furnishing all labor, materials, tools, equipment and incidentals and for doing all work involved in performing and complying with these items shall be considered as included in the prices paid for in the various contract bid items the Contractor deems appropriate and no additional compensation will be allowed.

END OF SECTION

SECTION 2. PUBLIC CONVENIENCE & PROTECTION OF EXISTING IMPROVEMENTS

2.01 Public Right-of Way and Easements

All water mains constructed as part of this project are to be placed within public right-of-way, including alleys and easements. The Contractor shall confine his or her operations within the limits of existing street right-of-way or easements as much as practicable.

In addition, encroachment onto private property will be necessary. Tenants and property owners are required to provide access, per City Code 13.04.065. Should access be refused, Contractor shall notify Engineer who will then pursue proper authorization for access.

In the event the Contractor finds it necessary to encroach onto private property for any other reason except for placement of water services, Contractor shall make all necessary arrangements with the owner of the property for such encroachment. A copy of any written agreement(s) entered into between the Contractor and the property owner concerning encroachment onto such private property shall be provided to the Engineer prior to beginning any work on the property described in the agreement.

2.02 Existing Utilities

Protection and maintenance of existing utilities shall meet the applicable requirements of Section 13 of the Standard Specifications and these Special Provisions.

The location, alignment, and depth of existing underground utilities as shown on the Plans are taken from public records and no responsibility is assumed for the accuracy thereof. For the most part, underground utility services are not shown on the Plans. Attention is directed to the provisions in Section 6-19 of the Standard Specifications.

The Contractor will insure that utility services to customers in the project are maintained.

The cost of relocating existing overhead or underground utilities not specified on the Plans to be relocated, but which the Contractor elects to relocate or cut and reconnect shall be borne by the Contractor.

2.03 Maintaining Water, Sewer, and Drainage Flows

The Contractor shall be responsible for maintaining water, sewer, and drainage flows including emergency repairs and temporary bypasses in accordance with Section 13 of the Standard Specifications.

All landscaping irrigation water lines cut or broken by the Contractor shall be immediately repaired. In the event repairs cannot be made, irrigation lines can be

capped for up to five (5) days. In the interim, the Contractor shall be responsible for ensuring all locations served by the irrigation lines continue to be provided adequate water. Any landscaping that dies, or fails to recover as a result of the Contractors actions shall be replaced in kind.

2.04 Maintaining Electrical Facilities

Maintenance of existing electrical facilities and temporary shutdowns of traffic signals shall be in accordance with Section 34-7 of the Standard Specifications.

Any damage caused by the Contractor to existing electrical facilities shall be repaired immediately and at the Contractor's expense. The Contractor shall trench under all existing traffic signal and street lighting conduits.

2.05 Work Performed by City Crews

The Contractor is advised that the City retains the option of performing with City crews all or a portion of any work involved in relocation, repairing, or otherwise restoring existing sewer, water, and drainage systems and services to developed properties within the limits of the project that may be in conflict with the proposed project improvements. Any such work performed by City forces will be at the discretion and convenience of the City. All work performed and materials provided by the City will be paid for by the Contractor or removed from this contract at no additional cost to the City.

2.06 Maintenance of Traffic and Public Safety

The Contractor's attention is directed to Sections 6-6 through 6-11, 7-4, and 16-3 of the Standard Specifications.

Spillage resulting from hauling operations along or across any public traveled way shall be removed immediately by the Contractor, and at his expense. Water or dust palliative shall be applied if ordered by the Engineer for the alleviation or prevention of dust nuisance.

Work in and around railroad crossings shall be in accordance with Section 6-6 of the Standard Specifications.

Contractor shall repair or replace to previous condition or better, all exiting traffic control system markers or devices that are damaged or destroyed during the work within three (3) calendar days of the completion of work unless written direction extending the time period is provided by the Engineer.

The Contractor shall be required to establish traffic scheduling and control measures acceptable to the Engineer prior to starting any work. The Contractor shall submit to the Engineer for review and approval a plan in accordance with Section 6-10 of the

Standard Specifications. This plan shall be submitted a minimum of ten (10) working days prior to the scheduled commencement of any work by the Contractor. The Contractor will not be allowed to begin work until an approved plan is on file with the Engineer. In addition, the approved plan shall be kept on hand at the project site at all times while construction is in progress.

The Contractor's traffic control plan shall include location of proposed work area, locations of areas where the public right-of-way will be closed or obstructed, all proposed phases of traffic control and time period of when traffic control will be in effect. The traffic control plan shall include name and business address of Contractor.

The Contractor shall be solely and completely responsible for furnishing, installing, and maintaining all warning signs and devices necessary to safeguard the general public and the work, and to provide for the safe and proper routing of all vehicular and pedestrian traffic during the performance of the work. The requirement shall apply continuously and shall not be limited to normal working hours.

The Contractor shall perform the following requirements included in the City ordinance Chapter 12.20:

1. Contractor shall not cause public right-of-way, public property or public easement to be covered with construction related trash, debris, garbage, waste material or soil. Areas affected by the construction must be cleaned to the satisfaction of the Engineer prior to re-opening traffic to the public.
2. Trench plates shall not be utilized for more than seven (7) calendar days in one location and temporary surfacing shall not be utilized for more than ten (10) calendar days in one location without prior written approval of the Engineer.
3. Contractor shall provide access to all driveways or alleys at all times unless other arrangements are made with the property tenant. The Contractor shall take precautions so as not to entrap vehicles on private property during the progress of the work. Access for emergency vehicles shall be available on all streets at all times.
4. Rear access to building and existing parking areas behind buildings shall be maintained. Contractor may close such access for a limited time only if arrangements have been made with property owners. Contractor shall give property owners forty-eight (48) hour written notice in advance of the closure.
5. Provide pedestrian traffic at all times except where closures are approved in advance by the Engineer.
6. At night and at other times when work is not in progress, the entire roadway shall be open to the public for traffic.
7. For work done before 7:00 A.M. or after 6:00 P.M., or during all daylight hours between 6:00 P.M. Friday to 7:00 A.M. Monday, roadway may be closed provided proper detours are provided and only if arrangements have been

made with the property owners in advance and approved by the Engineer. A minimum of five (5) working days shall be given to property owners in advance of closure.

The Contractor is hereby alerted that there may be streets within the project area designated as “primary streets” and as such the requirements and administrative penalties of Chapter 12.20 of the City ordinance apply. In accordance with the ordinance, the Contractor shall not impede traffic in any fashion outside the work hours of 8:30 A.M. and 4:00 P.M. The list of primary streets can be found in Section 6-10 of the Standard Specifications.

Prior to closing a street or alley, Contractor shall contact the following agencies:

1. Police Department - Provide the Police Communications Center with the street/alley closure limits and estimated duration of closure, by calling 264-5025 and faxing the information to 264-7770 one (1) working day prior to the closure.

2. Fire Department - Provide the Fire Communications Center with the street/alley closure limits and estimated duration of closure, by calling 228-3035 and faxing the this information to 228-3075 one (1) working day prior to the closure.

3. Solid Waste Division - Provide the street/alley closure limits and estimated duration of closure, by calling 808-4952 and faxing the information to 808-1494 five (5) working days prior to the street closure.

4. On Street Parking Division - Provide the street/alley closure limits and estimated duration of closure, by calling 808-5874 and faxing the information to 808-7501 five (5) working days prior to the street closure.

5. Regional Transit - Provide the street/alley closure limits and estimated duration of closure, by calling Lynn Cain at 321-5375 and faxing the information to 557-4541 five (5) working days prior to the street closure.

The information faxed to the above shall include:

Name of Project
Project Number
Contractor Name and phone number
City Inspector Name and phone number
Department of Utilities Project
Name and Limits of Street being closed
Duration of closure

A copy of such notifications shall be given to the Engineer.

2.07 Storage of Equipment or Materials

Materials and equipment shall be stored in accordance with Section 5-15 of the Standard Specifications.

2.08 Public Notifications

The Contractor shall notify all property occupants and management companies adjacent to the work in writing seven (7) calendar days in advance of beginning work on public right-of-way.

In addition, Contractor shall notify each property occupant and/or owner for work on private property as follows:

- Seven (7) calendar days in advance of commencing any work
- A second notice 24 hours in advance of commencing work
- 24 hours prior to a water main and/or service shutdown
- Repeat the seven (7) day and 24 hour notice for all subsequent work

Examples of notifications are located in Appendix D of these Special Provisions. These are provided for guidance only and should be modified and relevant to the work. Notification(s) shall be submitted in accordance with Section 5-7 of the Standard Specifications, and these Special Provisions.

2.09 Phasing of Construction Activities

Contractor shall expedite the scope of the work by dividing it in areas and completing the work in phases, as specified herein. An acceptable phasing plan shall be submitted a minimum of ten (10) calendar days prior to commencement of work. The plan shall illustrate the streets and properties impacted during each phase. The sequence of phases shall be specified on the plan.

The work shall be divided into a minimum of four (4) phases with each phase similar in size in regards to water services. Contractor shall expedite the work each phase in the manner identified in the plan. Any significant changes shall be submitted for approval.

Contractor may work on up to two (2) phases at the same time. However, all work within each phase shall be completed before a subsequent phase may begin. A phase is deemed complete when: water mains are operational; services and all surface restoration are complete; and, any other items specified in these Special Provisions.

The exception applies only to the abandonment of mains, hydrants, valves, etc.

Stockpiling of materials and equipment shall be limited to the phase for which they apply. Contractor shall not stockpile materials in excess of an amount representing a

ten (10) day supply. Furthermore, materials and equipment shall not remain in front of any single property for more than ten (10) days, unless otherwise approved by the Engineer.

2.10 Removal of On-Street Parking

In locations where the Contractor's operations require removal of on-street parking shall be in accordance with Section 6-18 of the Standard Specifications.

2.11 Excavations on Private Property

Unless otherwise approved by the Engineer, all excavations on private property shall be backfilled with native material on a daily basis.

2.12 Pavement Cutting and Surface Restoration

Pavement cutting and surface restoration shall conform to the applicable sections of 19, 22, 24, and 27 of the Standard Specifications, except that the structural section shall be no less than four (4) inches of asphalt concrete over twelve (12) inches of Class 2 aggregate base. Contractor shall restore surfaces in kind (using the same material as existing), including speed bumps, unless otherwise noted on the Plans or in these Special Provisions. Payment for restoring the surface in kind within any excavation shall be included in the associated item of work unless otherwise stated in these Special Provisions. Pavement cutting shall be perpendicular and parallel to the centerline of the road.

The Contractor has the option to saw cut after the pipe has been placed and just prior to pavement placement. Pavement cutting shall not precede trenching by more than five (5) calendar days except when saw cutting is used. If pavement is not saw cut, the Contractor shall fill the pavement cuts with asphalt concrete patching mix to maintain a smooth riding surface until trenching begins.

Temporary paving shall be in accordance with Section 14-4 of the Standard Specifications.

When removing sidewalk for the purpose of placing a meter box, an entire single flag of concrete shall be replaced. The single flag is typically 54" x 54" (20.25 square feet) in size. Additionally, Contractor shall replace concrete sidewalk, driveway or street surface to a size of 20.25 square feet. The Contractor shall attempt to place the meter box such that only one flag of concrete need be removed without causing damage to the existing curb and gutter. But, if the placement of a meter box falls in a joint or between two flags of concrete, both flags shall be removed and replaced.

The Contractor shall repair disturbed lawn areas by carefully and evenly cutting the lawn to preserve the sod until the water service lateral is backfilled and compacted. All

vegetation removed during construction shall be replaced to match preconstruction conditions. Sod may be reused and placed over the backfilled trench provided it is in an acceptable condition. Sod that is unsuitable for re-use or has fails to take shall be replaced with new sod to match preconstruction conditions.

All fences or shrubbery in the way of construction shall be removed and replaced. The Contractor may re-use the existing fence material provided it is in the same condition to serve the same use as before.

Private property or existing improvements damaged by the construction operations shall be replaced with new materials at no additional cost. Masonry work damaged as a result of the construction shall be repaired by an experienced brick mason to match existing improvements. Existing bricks shall be salvaged and reused to preserve the integrity of the improvement.

Driveways consisting of exposed aggregate concrete or flat concrete shall be replaced by an experienced concrete finisher to match existing improvements.

2.13 Trench Excavation and Backfill

Trench excavation and backfill shall conform to the construction Plans and the provisions of Section 27-3 and 27-8 of the Standard Specifications.

2.14 Tree Preservation Requirements

Trees within the project area shall be protected by the following means:

1. The contractor shall hire an International Society of Arboriculture (ISA) certified arborist to do any required pruning for equipment clearance. The contractor shall contact the City Arborist (Dan Pskowski, 768-8604) for a root inspection(s) for trenching activities within the dripline(s) of the trees.

2. If during excavation for the project, tree roots greater than two inches in diameter are encountered, work shall stop immediately until the project arborist can perform an on-site inspection. All roots shall be cut clean and the tree affected may require supplemental irrigation/fertilization and pruning as a result of the root cutting. The project sponsor will be responsible for any costs incurred. Depending upon the amount of roots encountered and the time of year, wet burlap may be required along the sides of the trench.

3. Contractor shall be liable for any damage to existing trees, i.e. wounded trunk, broken limbs, pouring of any deleterious materials, or concrete washout under the dripline of the trees. Damages will be assessed using the A Guide to Plant Appraisal eighth edition, published by the International Society of Arboriculture. An appraisal report shall be submitted for review by the City Arborist.

Tree protection methods noted above shall be identified on all construction plans for the project.

2.15 Hazardous or Contaminated Materials

In the event hazardous or contaminated materials are encountered at the site for which separate handling or removal provisions have not been made in these Special Provisions, the Contractor shall stop work on that item, contact the Engineer and schedule his operations to work elsewhere on the site, if possible. The City will be responsible for handling and removal of hazardous material or may request that the Contractor be made available, through contract change order, to provide additional services as needed for the completion of the work. Additional services may consist of retaining a subcontractor who possesses a California license for hazardous substance removal and remedial actions.

Hazardous or contaminated materials may only be removed and disposed of from the project site in accordance with the following provisions:

1. All work is to be completed in accordance with the following regulations and requirements:
   a. Chapter 6.5, Division 20, California Health and Safety Code.
   b. California Administration Code, Title 22, relating to Handling, Storage, and Treatment of Hazardous Materials.
   c. City of Sacramento Building Code and the Uniform Building Code , 1994 edition.

2. Coordination shall be made with the County of Sacramento Environmental Management Department, Hazardous Materials Division, and the necessary applications shall be filed.

3. All hazardous materials shall be disposed of at an approved disposal site and shall only be hauled by a current California registered hazardous waste hauler using correct manifesting procedures and vehicles displaying a current Certificate of Compliance. The Contractor shall identify by name and address the site where toxic substances shall be disposed of. No payment for removal and disposal services shall be made without a valid certificate from the approved disposal site that the material was delivered.

None of the aforementioned provisions shall be construed to relieve the Contractor from the Contractor's responsibility for the health and safety of all persons (including employees) and from the protection of property during the performance of the work. This requirement shall be applied continuously and not be limited to normal working hours.

2.16 Payment

Full compensation for furnishing all labor, materials, tools, equipment and incidentals and for doing all work involved in performing and complying with these required items shall be considered as included in the prices paid for in the various contract bid items the Contractor deems appropriate and no additional compensation will be allowed.

END OF SECTION

SECTION 3. WATER CONSTRUCTION REQUIREMENTS

3.01 AWWA Standards - Water Mains

These Special Provisions contain reference to certain standards of the American Water Works Association (AWWA). Copies of these standards are available for reference at the City of Sacramento, Department of Utilities, Engineering Services Division located at 1395 35th Ave in Sacramento.

In submitting a bid, the Contractor certifies familiarity the AWWA Standards, including, but not limited to: field handling, installation, inspection, disinfection, pressure testing.

3.02 Opening Direction of Valves and Fire Hydrants

The opening direction of valves and fire hydrants shall be in accordance with Section 27-7 of the Standard Specifications.

3.03 Disinfection and Pressure Testing of Water Mains

Disinfection and pressure testing of all water pipe, valves and fittings, shall be in accordance with Section 27 of the Standard Specifications, except as modified herein. Pressure testing and disinfection shall be made in the presence of the Engineer.

Contractor shall capture dechlorinated water in water trucks made available by the City. Up to four trucks will be available. The Contractor shall notify the Engineer a minimum of three days in advance prior to the disinfection process and coordinate truck availability with the City. If the City is not able to provide adequate trucking to capture the water, Contractor shall release water to the storm or sewer system by hard piping to a drain inlet or manhole, at no cost to the City. Release of dechlorinated water to the storm or sewer system shall be in accordance with the requirements of Section 27 of the Standard Specifications. Unavailability, or lack, of trucks shall not constitute a delay to the Contractor. Releasing dechlorinated water to the ground shall not be allowed.

3.04 Distribution System Shutdowns for Water Mains

After successful completion of hydrostatic pressure testing and disinfection, the Contractor shall connect the new water mains to the existing water system where indicated on the Plans and in accordance with Section 27 of the Standard Specifications.

Contractor shall coordinate and schedule shutdowns by providing the Engineer a two (2) week (minimum) notification of said shutdown. Failure to provide adequate notification will postpone water main shutdown.

Contractor shall have each tie-in location pre-dug and plated. All parts, equipment and personnel necessary shall be at job site prior to beginning shutdown to complete the work within a four (4) hour period.

Where indicated in the Plans, the Contractor shall cut existing pipe, remove existing plugs or bulkheads, clean pipe ends, prepare connections and make the new connections to existing water mains. The Contractor shall temporarily cap existing mains as necessary and as approved by the Engineer to maintain service to customers.

Water released from existing mains shall be removed and disposed of by the Contractor. Excavations shall be kept dry until all necessary work within the work area has been completed.

Without exception, all opening and closing of the valves on existing water mains will be performed by City crews only.

3.05 Water Shutdowns for Residential Water Service Tie-Ins

Contractor shall prepare water service tie-ins so the length of time for any water service shutdown is minimized. Shutdowns will be approved once complete preparation, to the satisfaction of the Engineer, is made in order to minimize the length of time of the shutdown. Contractor shall limit the time of interruption of water to any parcel to a maximum of four (4) hours.

3.06 Lead Free Materials

Notwithstanding any other provision of this Contract, all materials installed shall comply with the requirements of Section 116875 of the California Health & Safety Code and NSF 61 Annex G.

3.07 Plugged Fixtures

The Contractor shall remove sediment build up at faucets, sprinklers, etc. which clogged the interior house plumbing as a result of placing residential water services.

The Contractor shall open all exterior faucets and/or ask the occupant to open all interior faucets to help prevent fixtures from plugging.

3.08 Construction of Residential Water Services

All residential water services shall be a minimum 1½ inch diameter from the new meter to the existing above ground tee at the hose bib connection. Water services shall be Type K copper or HDPE pipe in accordance with Section 10 of the Standard Specifications and these Special Provisions. Locating wire shall be installed on HDPE pipe, in accordance with Section 27 of the Standard Specifications. Some detail drawings are located in Appendix C of these Special Provisions.

If it's necessary to route and connect the residential water system to a second above ground tee, Schedule 40 PVC pipe is acceptable. Installation and connection of residential water systems shall be performed in accordance with the applicable sections of the latest revised Uniform Plumbing Code (hereinafter called UPC). No connections shall be made until installation and testing of the distribution system and water service laterals are complete. All underground work shall be inspected prior to backfilling.

Pipe alignment shall not pass under any dwelling.

All work relating to placing and connecting residential water systems and abandoning existing water systems at each residence shall be completed within five (5) consecutive working days. The valve at the meter shall be left in an open position and the system shall be operational before the Contractor's work is considered complete.

The Contractor is encouraged to visit the project site and become better acquainted with the properties in the scope of work and the water service connections.

3.09 Placement of Meter Boxes

Meter boxes shall be placed as follows:

- For existing service located in an alley, the meter box shall be placed in right-of-way at the property line.
- Where a park strip exists between sidewalk and curb, place meter box in the park strip.
- Where there sidewalk is adjacent to curb, meter box shall be placed in the sidewalk.
- If only curb exists, meter box shall be placed in the non-traffic area behind the curb.
- For unimproved streets (no sidewalk or curb), meter box shall be placed adjacent to the property line within the street right-of-way.

For situations not conforming to the above, meter box placement will be determined by the Engineer.

Meter boxes shall be placed flushed to match surrounding grade. In such places where conditions dictate, the meter box may be placed at angle not to exceed 45 degrees. Should field conditions exceed this maximum angle, then the placement will be determined by the Engineer.

Excavation for meter boxes shall be a minimum of eight (8) inches around all sides of the box to allow for proper backfill compaction and surface restoration around the box, unless otherwise determined by the Engineer.

3.10 Water Meters

The definition of "meters" outside of section 3.11 shall mean the meter, register, and all other components assembled as one unit as specified in this section.

METERS AND REGISTERS

All meters and registers shall be compatible with ASCII communication protocol. All meters shall be guaranteed free from manufacturing defects in materials and workmanship and must be adaptable to field programmable registers without interruption of the customer's service.

Testing of meters for compatibility for ASCII communication protocol will be completed by the Engineer, and costs borne by the City. Meters that fail to meet the compatibility requirement shall be retested. Cost for all retests of meters will be borne by the Contractor and deducted from payment due Contractor for work performed under the terms of the contract. Any meter that is defective or not compatible with the ASCII communication protocol for any reason, shall be replaced with a compliant meter within 10 (ten) days or pay $200, per meter, in liquidated damages to compensate the City for staff time and delay.

Unless otherwise noted in these contract documents, all meters supplied for the project shall be positive displacement type meters. Two (2) inch and smaller positive displacement meters shall have absolute encoder type registers.

All irrigation services that are 1½" and greater shall be turbine meters and shall have an absolute encoder type register.

Absolute Encoder Type Registers for Positive Displacement, Compound and Turbine Meters

General Description

Registers furnished under these specifications shall be the product of a manufacturer with at least ten years of experience in the manufacture of absolute encoder-based registers. The registers shall have the capability of providing encoded meter information as described in the following specification. Specifications for the required cold-water meters can be found below in separate specifications. Registers provide low voltage conversions are acceptable; however, registers utilizing generator pulses are not acceptable under this standard.

Construction

Registers shall be of the absolute encoder type and permanently, hermetically sealed in a copper or stainless steel can to provide protection from moisture, high strength, and resistance to handling damage. Similar size, type and registration or registers shall be interchangeable.

All registers 1½ inch and large must be removable without disassembly of the water meter or the service line. Registers must be free of opening to protect the internal electronics of the register.

Registers shall be equipped with low flow indicators. Registers shall read in cubic feet. The register is independent of the meter. Therefore, register's Manufacture Date and Identification Number shall be printed on the face of the register. The manufacturer of the meter and register shall provide meter serial numbers with barcodes on the meter, register lid and shipping box. In addition, the contractor will supply for each shipment an electronic spreadsheet providing meter serial numbers for the City to expedite tracking and inventory purposes.

Register lenses constructed of minimum ¼ inch tempered are preferred but not required; glass domed (non-tempered) register lenses are acceptable for durability in pit installations. All other register assembly and material requirements stated herein shall also apply. Registers shall be equipped with a hinged lid to completely protect the register lens.

The absolute Encoder Register output shall be a factory-potted NICOR Hydroconn AMR Series III in-line male connector with female metal contacts and Hydroconn AMR Series II End Cap (No Substitute). The register cable shall be Nicor's three (3) conductor cable and measure 36" long from surface of the register to the end of the connector for ⅝ through two (2) inch meters.

Operation

Upon inquiry from a remote location, the absolute encoder register shall disclose the exact position of the six most prominent number rollers. All power necessary for data transmission shall be supplied from the interrogation device. All registers shall be fully compatible with ASCII communication protocol. All registers shall employ a device to offer a reliable transfer of the roller bank assembly to ensure accuracy and to prevent ambiguous readings. For reliability and durability, the position of each roller shall NOT be determined by using any type of mechanical contacts which can wear out over time. Optical character recognition (OCR) is the preferred technology, but is not required, for determining roller position, as this method reads the actual position of the index odometer wheels when interrogated by a ASCII communication protocol.

Data transmission shall be instantaneous and supplied in an ASCII format without conversion or modification. Registers must operate reliably down to at least 4.5 volts.

Pin out connection: When meter side connector is viewed end-on with the molded arrow at the 12 o'clock position, the contacts occupy the 2, 6 and 10 o'clock positions.

O'clock Position	Function
2	Power/Clock
6	Ground/common/return
10	Encoder Data

Warranties

All encoded registers shall be free from defects in materials and workmanship for ten (10) years from the date of purchase.

Positive Displacement Type Meters 1" - 2"

General Description

Meters furnished under these specifications shall be the product of a manufacturer with at least ten (10) years of experience in meter manufacturing for the American Market. Meters shall be new, first line quality, positive displacement type cold water service. Meters must be of the oscillating piston or nutating disc type. Multi-jet and Single-jet meters are not acceptable under this specification. Meters shall comply with AWWA Standard C700 latest revision and the minimum specification herein. Any low lead bronze shall not have less that 85% copper content. In addition, meter manufactures will meet all guidelines established by California Bill AB1953 and ANSI/NFS Standard 61 Annex F and Annex G requirements. They shall be designed for use with potable water below 80 degrees Fahrenheit.

Type

Cold water service meter for measuring potable water in residential services, positive displacement meters only, sealed register.

Cases: 1"

All meters ⅝ through one (1) inch shall have an NSF approved, low lead bronze outer main case body with a separate, removable measuring element. The low lead bronze case shall not have less that 85% copper content. The meter case casting shall have raised characters denoting the meter size and the direction of water flow. The casting shall be permanently marked with the serial number of the meter in a manner so that the number is easily read from above. All bottom plates shall be isolated from the potable water by a full rubber liner. Meters shall be provided with bronze bottom plate and held in place with stainless steel bolts with integral washer heads. Cases must be capable of withstanding working pressures of one hundred fifty (150) psi. Thread protectors shall be supplied for the connection ends.

Length

Meters must conform to AWWA C700 standard as most recently revised.

Main cases: 1 ½" through 2"

All meters 1½ through two (2) inch shall have a body main case made of high quality copper alloy, with a separate, removable measuring element. The meter casting shall have raised characters denoting the size meter and the direction of water flow. The casting shall be permanently marked with the serial number of the meter in a

manner so that the number is easily read from above. Meters shall be of the split case design.

Laying Length

Meters must conform to AWWA C700 standard as most recently revised. The laying length of PD meter and/or strainer assembly shall be as follows:

Meter Size	Meter
1 ½”	13” Max
2”	17” Max

Register Housings

Register housing shall be constructed of an engineered polymer and provide full protection of the register assembly. Registers shall comply with AWWA C700 section 4.1.3 performance requirements in the latest revision. Register assemblies shall be secured to the main case in a tamper resistant fashion to prohibit unauthorized removal. Seal screws, tamper-resistant plugs, tamperproof screws, or locked devices are acceptable.

Measuring Chambers

The measuring chamber shall be of the two-piece oscillating piston or nutating disc design. No inferential-type meters will be allowed. Chambers shall be manufactured from an engineered polymer. Chambers shall be separate from the outer casing and so secured in the main case that the accuracy of the meter will not be affected by any distortion of the case. All wear prone surfaces shall be reinforced with a nylon material. All measuring chamber assemblies shall operate smoothly and be capable of sustaining long-term accuracy.

All motion from the piston shall be transferred to the register via magnetic drive. Piston oscillations or disc nutations must not exceed the figure recommended in Table one (1) of AWWA Standards C-700 latest version for the size of the meter being bid.

Registration Accuracy

All meters shall meet or exceed the following flow requirements:

Size	Low Flow GMP @ 95%	Normal Flow GMP 98.5% - 101.5%	Continuous Flow GPM
1”	¾	3-50	25
1 ½”	1 ½	5-100	50
2”	2	8-160	80

Magnetic Coupling

The piston oscillations will be transferred to the sealed register through the use of a magnetic coupling. Meters with stuffing boxes, spindles and packing glands will not be acceptable.

Headloss
Meters shall conform to AWWA C-700 specifications as currently revised.

Pressure Capability
Meters shall operate up to a working pressure of 150 psi without damage or leakage. Accuracy shall not be affected by pressure variation up to 150 psi.

Strainers
All meters shall be provided with a strainer screen installed in the meter. Strainer screens shall be rigid, fit securely, be easy to remove and have an effective straining area at least two times that of the main case inlet.

Warranties
Meters shall be warranted by the manufacturer to meet AWWA new meter accuracy standards according to the following time periods and registered usage amounts, whichever occurs first:

Size Meter	Years Guaranteed	Registered Usage
1” C700	5 years from date of shipment	1,100,000 US Gallons
1 ½” C700	5 years from date of shipment	1,600,000 US Gallons
2” C700	5 years from date of shipment	2,100,000 US Gallons

Turbine Type Meters 1 ½” through 4”

General Description
Meters furnished under these specifications shall be the product of a manufacturer with at least ten years of experience in meter manufacturing for the American Market. Meters shall be new, first line quality, turbine type for cold-water service. Meter sizes shall be inclusive and shall comply with the Class II AWWA Standard C701 latest revision and the minimum specification herein. Any low lead bronze shall not have less that 85% copper content. In addition, meter manufactures will meet all guidelines established by California Bill AB1953 and ANSI/NFS Standard 61 Annex F and Annex G requirements. They shall be designed for use with potable water below 80 degrees Fahrenheit.

Registration Accuracy
All Turbine Type Meters shall meet or exceed the AWWA latest standard, as follows:

Size	Low Flow GMP @ 95%	Normal Flow GMP 98.5% - 101.5%	Minimum Intermittent Flow GPM
1 ½”	3	4-160	200
2”	3	4-200	250
3”	4	8-450	550
4”	7	15-1000	1200

Main Cases
The body main case shall be of bronze composition of a high tensile strength or epoxy coated ductile iron on 1½ to four (4) inch sizes and be capable of resisting distortion under pressure up to one hundred and fifty (150) psi. All meters shall have the size and direction of flow indicated on the case and shall be designed for easy removal of all interior parts without disturbing the connections to the pipeline.

Register Housings
The register housing shall be constructed of an engineered polymer and provide full protection of the register assembly. Register assemblies shall be secured to the main case in a tamper resistant fashion to prohibit unauthorized removal. Seal screws, tamperproof screws, or other locking devices are also acceptable.

Measuring Chambers
The measuring elements or chamber for all meters shall be of engineered polymer and shall be separate from the case and easily detached and removed there from.

Rotor spindles shall be of tungsten carbide, stainless steel or titanium alloy supported by radial bearings made of PTFE graphite compounds, synthetic sapphire, or sapphire/ceramic jewel.

Laying Length
The laying length of Turbine meters and/or strainer assembly shall be as follows:

Meter Size	Meter/Meter & Strainer	Strainer	* Test Plug
1 ½”	13”	7” Max	1” NPT
2”	17”	7” Max	1 ½ ” NPT
3”	12”	7” Max	2” NPT
4”	14”	9” Max	2” NPT

*Spool pieces with a test port are acceptable

Rotors
The measuring impellers, vanes or rotors for all meters shall be polypropylene, nylon, hard rubber or engineered polymers and shall be mounted on a horizontal axis in the center of the measuring element with rotations of the turbine transmitted to the register by means of magnets. Straightening vanes of corrosion resistant material as required shall precede the rotor.

Strainers
Integrally-cast stainless steel plate type strainers are required on sizes 1½ through four (4) inch turbine meters. Strainers shall be rigid, easily removable, and have an effective straining area at least double that of the meter main case inlet. External strainer connections shall conform to the main case and shall be accompanies by gaskets, bolts and nuts.

Warranties

At a minimum, all meters shall carry the following published warranties; Meters shall be guaranteed to be free from defects in materials and workmanship for a period of 24 months after installation and to meet AWWA C-701 Accuracy Standards for two (2) years from date of shipment.

3.11 City Supplied Material

The City will supply the lid locks to install on meter box lids, as well as the four (4) and six (6) meters. The Contractor shall pick up materials at the City's Corporation Yard located at 5730 24th Street. The Contractor shall be responsible for scheduling pick-up, receiving and transporting these items from the City of Sacramento Corporation Yard. Once received, materials shall become the responsibility of the Contractor. Replacement of lost or damaged material shall be at the Contractors expense.

The Contractor shall submit a request for parts to the Engineer. The Contractor shall coordinate with the Engineer on an appropriate time schedule and quantity of materials. Parts are typically available for pickup within five (5) business days from date of request. The Contractor shall schedule operations so that the number of occasions where these materials are picked up is kept to a minimum. Exceptions shall be coordinated with the Engineer.

Upon completion of the project, any unused City supplied materials shall be returned to the Corporation Yard. All equipment shall be like new condition to the satisfaction of the Engineer. The cost of damaged or unreturned material will be charged against the Contractor's retention at closeout. The Contractor shall coordinate with the Engineer on an appropriate time schedule for returning unused parts.

3.12 Meter Boxes and Lids

Meter box and lid shall be constructed of materials in accordance with the appropriate sections of ANSI/SCTE and shall be tested per the appropriate ASTM sections.

Meter box lids shall provide a slip resistant surface with a coefficient of friction greater than 0.5. Materials shall be resistant to chemicals, sunlight exposure, water absorption, and flammability. All meter box lids shall sit flush with the rim of the meter box body and shall be seated no more than 1/16 inch into the body of the meter box. Lids shall be compatible with the automated meter reading infrastructure specified in the Water Meter section of these Special Provisions.

Meter boxes accommodating one (1) inch meters, the nominal size shall be 13"W x 24"L x 12"D. Boxes for 1½ and two (2) inch meters the nominal size shall be 17"W x 30"L x 12"D. Reading lids shall not be allowed. Meter box and lid, as a unit, shall be from the same manufacturer.

The manufacturer shall submit documentation showing compliance with material strength and proof of design testing.

Meter box and lid in sidewalk or driveway

Meter box and lid shall be constructed of a polymer concrete material with fiber reinforced plastic or a bulk moulding compound. All meter box and lids shall be identical in composition and have a matching “concrete gray” appearance. Meter box and lid shall meet all test provisions of the latest edition of the ANSI/SCTE 77 Tier 15 application or ASTM-C857: Load Category A-16.

Lids shall have a 1¾ inch diameter hole with a three (3) inch diameter, ½ inch deep recessed area centered over the 1¾ inch hole to accommodate an automated meter reading endpoint and lid lock. Thickness at the recessed area shall not exceed one (1) inch.

Lids shall be marked “WATER”, with a nominal lettering height of one (1) inch and shall be indented into the surface of the lid to resist wear. Lid shall include two (2) ½ inch by 2⅝ inch (minimum) to four (4) inch (maximum) pockets with integrated lifting bar to accommodate a standard manhole hook.

Meter box and lid in Landscape area

Meter box and lid shall be constructed of a concrete or a polymer concrete material with fiber reinforced plastic material.

Meter boxes constructed of a polymer concrete material with fiber reinforced plastic material shall meet all test provisions of the latest edition of the ANSI/SCTE 77 Tier 8 application.

Concrete meter box and lid shall have a compressive strength at yield of 3000 psi when tested per ASTM C-39: Load Category A-0.3.

Lids shall have a two (2) inch diameter hole with a three (3) inch diameter, ½ inch deep recessed area centered over the two (2) inch hole. Thickness shall not exceed one (1) inch at the recessed area, to accommodate an automated meter reading endpoint.

Lids shall be “concrete gray” in appearance. To facilitate removal, the lid shall include two (2) ½ inch by 2⅝ inch (minimum) to four (4) inch (maximum) pockets with integrated lifting bar to accommodate a standard manhole hook. The lids shall be marked “WATER”, with a nominal lettering height of one (1) inch and shall be indented into the surface of the lid to resist wear.

Meter box and lid in alley, traffic or unimproved street

Meter box and lid shall be constructed of an H20 traffic rated (per AASHTO-H20 load test) concrete material and shall meet the Cal Trans No. 5T or 6T State Specification. Lids shall be H20 rated.

Lids shall have a 1¾ inch diameter hole with a three (3) inch diameter, ½ inch deep recessed area centered over the 1¾ inch hole.

The lid shall be “locked” into the meter box body with a 300 series ⅜ inch-16 stainless steel button head with pin in hex bolt with washer. The hex shall be 7/32” hex with pin. Each Lid shall have the term "PROPERTY OF CITY OF SACRAMENTO" welded onto the top. The letters shall be one (1) inch in height.

Meter boxes for four (4) thru six (6) inch meters
The nominal meter box size shall be 30”W x 48”L x 12”-18”D, and meet the applicable specifications for the type of meter box.

3.13 Contractor Source Documents

Contractor shall collect and record certain information on water services on an electronic spreadsheet provided by the Engineer. The spreadsheet will include address and assessor’s parcel number (APN). The Contractor shall provide the following:

- Meter number/serial number
- Meter manufacturer
- Meter location
- Meter size
- Service size and material type
- Bid items completed
- Extra concrete quantity
- Comments detailing unusual situations
- Date Paid
- Indicate if an address was Added or Deleted
- Total Concrete (square feet)

A barcode reader shall be used to record the serial number of each meter. Manual entry shall not be used.

The Contractor shall make any address corrections on the electronic spreadsheet.

An example of the spreadsheet is located Appendix D of these Special Provisions. Contractor shall submit a copy of the electronic spreadsheet as well as a hard copy with each monthly billing.

3.14 De-watering

A determination of groundwater level has not been made for this project. The Contractor shall be responsible for the control, removal, and disposal of any groundwater in accordance with Section 27-3 of the Standard Specifications.

3.15 Payment

Full compensation for furnishing all labor, materials, tools, equipment and incidentals and for doing all work involved in performing and complying with these required items shall be considered as included in the prices paid for in the various contract bid items the Contractor deems appropriate and no additional compensation will be allowed.

END OF SECTION

SECTION 4. ITEMS OF THE PROPOSAL

Item No. 1 Mobilization

Mobilization shall consist of preparatory work and operations including those necessary for the movement of personnel, equipment, supplies, and incidentals to the project site; and for other work and operations which must be performed or costs incurred prior to beginning work on the various contract items. Compensation for this item shall not exceed three (3) percent of the total bid amount.

Payment shall be on a lump sum basis and shall include full compensation for furnishing all labor, materials, tools, equipment and incidentals for performing work necessary to complete this item in place.

Item No. 2 Construction Photographs

This item shall conform to Section 11 of the Standard Specifications, except as modified herein.

Pre-construction photographs or video of all work on private property shall also be included in this item and shall conform to Section 11 of the Standard Specifications. The addresses of the properties affected by construction shall be clearly identified on each photograph, or video. Pre-construction photographs or video shall be submitted to the Engineer prior to the start of construction. Photographs or video shall include all pavement and landscaping features in and around the work area. The Contractor shall submit as many photographs or as much video as necessary to clearly show the condition of existing pavement and landscaping. Special emphasis shall be placed on existing pavement, structures, flowerbeds, trees, or any other improvements in close proximity to the construction area. Upon completion of work at each affected property, the Contractor shall have post-construction photographs or video taken at the same locations and from the same perspective that the pre-construction photos or video were taken. All photographs or video shall be taken with a digital still camera or video recorder.

Pre and post photographs, or video, for each property worked on shall be submitted to the Engineer written to DVD or portable hard drive. The photographs on the DVD or portable hard drive shall be cataloged as follows: a folder for each street; a sub-folder with each property. Videos for each property worked on each street shall be located in a chapter named after the street

A table of contents shall be included with each DVD or portable hard drive.

Contractor shall be paid half of the lump sum price upon submittal of the pre-construction photos. The remaining amount upon submittal the post-construction photographs.

Payment for construction photographs shall be at the contract lump sum price bid and shall include full compensation for furnishing all labor, materials, tools, required processing, and equipment, and for performing all work necessary to complete this item in accordance with the Standard Specifications, these Special Provisions, and as directed by the Engineer.

Item No. 3 8 Inch Water Main to Place

Where shown on the Plans, ductile iron pipe or polyvinyl chloride pipe (PVC) water pipe and fittings shall be provided and placed in accordance with the Plans, manufacturer's recommendations, and in conformance with Sections 10 and 27 of the Standard Specifications.

Included in this item are fittings used to change both vertical and horizontal alignments as shown on the Plans, connect to the existing distribution system, eliminate conflicts with existing utilities, or maintain depth of bury.

Fire hydrant lead pipe and tee shall be included as part of this item.

Surface restoration shall be in accordance with the section entitled "Pavement Cutting and Surface Restoration" of these Special Provisions, and shall be paid for under this item.

Payment shall be at the unit price bid per linear foot of water main placed and shall include full compensation for furnishing all labor, materials, tools, and equipment, and for doing all work necessary to complete this item in place including pavement cutting and removal, trenching, furnishing and placing pipe, backfilling, removing or abandoning existing pipe, testing, disinfection, repaving or other surface restoration.

Item No. 4 8 Inch Gate Valve to Install
Item No. 5 6 Inch Gate Valve to Install

Gate valves and gate valve boxes shall be placed where shown on the Plans or directed by the Engineer in conformance with Sections 10, 27 and 38 of the Standard Specifications. Included in this item are gate valves and boxes for fire hydrants.

Surface restoration shall be in accordance with the section entitled "Pavement Cutting and Surface Restoration" of these Special Provisions, and shall be paid for under this item.

Payment shall be at the unit price bid per each gate valve installed and shall include full compensation for furnishing all labor, materials, tools and equipment, and for performing all work necessary to complete this item in place.

Item No. 6 Blow-off Valve to Install

This item consist of furnishing and installing a 2 (two) inch diameter blow-off valve at the locations indicated in these Special Provisions, and shall conform to the applicable requirements of Sections 10, 27 and 38 of the Standard Specifications.

Surface restoration associated with this item shall be performed as specified elsewhere in these Special Provisions and paid for under this item.

Payment shall be at the contract unit bid price for each blow-off valve installed and shall include full compensation for furnishing all labor, materials, tools and equipment, and for all work necessary to complete this item in place.

Item No. 7 Fire Hydrant to Install

Standard fire hydrant shall be installed where indicated on the Plans in accordance with Sections 10 and 27, and Standard Drawing W-201 in Section 38 of the Standard Specifications.

Surface restoration associated with this item shall be performed as specified elsewhere in these Special Provisions and paid for under this item.

Payment shall be at the unit price bid for each fire hydrant installed and shall include full compensation for furnishing all labor, materials, tools and equipment, and for performing all work necessary to complete this item in place.

Item No. 8 Connection to Existing Water System

This item shall consist of connecting the new water main to the existing water distribution main at the locations indicated and to the details shown on the Plans, in accordance with Section 27 of the Standard Specifications and these Special Provisions.

The Contractor shall locate and expose existing water mains and verify tie-in locations to locate existing water mains.

Pipe, fittings and restraints necessary to connect mains shall be included in this item. The Contractor shall use 45 degree (maximum) elbows to connect to existing pipe and match existing elevations, in accordance with Standard Drawing W-103 of the Standard Specifications.

Surface restoration associated with this item shall be performed as specified elsewhere in these Special Provisions and paid for under this item.

Payment shall be at the contract unit bid price for each connection to the existing water distribution system and shall include full compensation for furnishing all labor, materials,

tools and equipment, and for performing all work necessary to complete this item in place.

Item No. 9 <u>Meter to Install</u>

Contractor shall install a one (1) inch meter in an existing meter setter where indicated on the list of addresses in these Special Provisions.

Located in Appendix A of these Special Provisions is a list of addresses identifying the properties where a meter shall be dropped into existing meter box. Water service locations are included as a reference only and in no guarantee is made of their accuracy.

Contractor shall shut off water to the existing service, remove and replace the existing idler and install a new meter. Once the meter is installed, Contractor shall turn on the water and flush the service.

If the depth from the top of the meter box to the top of the idler is less than twelve (12) inches, a retrofit shall be performed.

<u>Payment</u> shall be at the unit price bid for each meter installed shall include full compensation for furnishing all labor, material, tools, equipment and incidentals and for doing all work to complete this item in place.

Item No. 10 <u>Water Service to Install</u>

This item shall consist of installing a one (1) inch water service where indicated on the list of addresses beginning at the water main to the new meter in accordance with Section 10 and 27 of the Standard Specifications, these Special Provisions and the UPC. Each water service shall include pipe, saddle, corporation stop, meter, meter box, and meter lid.

The list of addresses is located in Appendix A of these Special Provisions. It identifies the properties where a water service shall be installed. Water service locations are included as a reference only and in no guarantee is made of their accuracy.

Contractor shall locate water service laterals. Locating services shall be performed by a qualified person, in accordance with the requirements of Underground Service Alert. All cost shall be borne by the Contractor. USA markings shall be verified by the Contractor.

The Contractor shall reconnect the existing water service on the property owner's side of the meter box so that the customer's water service is in service when this item is complete.

If the residential water service is in such poor condition that the contractor cannot reconnect to the service, the Contractor shall replace a portion of the service until a suitable connection point can be found. This item shall include replacing up to five (5) feet of the customer's service. Addition footage shall be paid under a separate item.

Contractor shall abandon existing water services, once the new water service is connected and operable. Contractor shall turn off the corporation stop and cut and abandon service at the corporation stop prior to making the new water service connection.

Surface restoration shall be in accordance with the section entitled "Pavement Cutting and Surface Restoration" of these Special Provisions, and shall be paid for under this item. Concrete restoration beyond 20.25 sq. ft. per each property, and directed by the Engineer, shall be paid under a separate bid item.

Payment shall be at the contract unit bid price for each water service and shall include full compensation for furnishing and installing all labor, materials, tools and equipment, and for performing all work necessary to complete this item in place.

Item No. 11 Meter Retrofit of 1 inch Water Service
Item No. 12 Meter Retrofit of 1½ inch Water Service
Item No. 13 Meter Retrofit of 2 inch Water Service

Existing water services shall be retrofitted by installing meters, meter boxes and lids in accordance with Section 10, 27 and 38 of the Standard Specifications and methods outlined in American Water Works Association Standards M6 - Manual of Water Supply Practices (AWWA), the UPC. Some standard drawings are located in Appendix C of these Special Provisions.

A one (1) inch meter shall be installed on ¾ inch services. One (1) inch meters shall also be installed on single family residential properties with a 1¼ inch service. Multi-family residential properties with a 1¼ inch service shall be retrofitted with a 1½" meter. Contractor shall supply pipe and fittings necessary to transition and connect the existing service to the new meter as specified herein.

Contractor shall locate all water service laterals. Locating services shall be performed by a qualified person, in accordance with the requirements of Underground Service Alert. All cost shall be borne by the Contractor. USA markings shall be verified by the Contractor.

Located in Appendix A of these Special Provisions is a list of properties where services shall be retrofitted with a meter. Water service locations are included as a reference only and in no guarantee is made of their accuracy.

Contractor shall furnish and install pipe, fittings, meter valves (straight and angled), meter setters, meters, meter boxes, lids, and all other materials required to complete

the installation of the service retrofit.

If a backflow prevention assembly is found at any of the listed retrofit addresses, the Contractor shall contact the Engineer for direction on replacement, removal, or other required action.

The quantity of water service retrofits shown on the bid proposal is for bidding purposes only. The unit price indicated water service retrofits will not be adjusted because the actual number of required meter service retrofits varies from the quantity shown on the bid proposal.

Water main shut downs to turn off the service during the meter retrofit of a water service will not be allowed. The Contractor shall be responsible for shutting off the service during the meter retrofit of the water service by crimping the service or utilizing other AWWA approved method.

The Contractor shall reconnect the existing water service on the property owner's side of the meter box so that the residential water service is operable when this item is complete. If the residential water service is in such poor condition that the contractor cannot reconnect to the service, the Contractor shall replace a portion of the service until a suitable connection point can be found. This item shall include replacing up to five (5) feet of pipe. Additional footage shall be paid under a separate item.

Surface restoration shall be in accordance with the section entitled "Pavement Cutting and Surface Restoration" of these Special Provisions, and shall be paid for under this item. Concrete restoration beyond 20.25 sq. ft. per each retrofit location, and directed by the Engineer, shall be paid under a separate bid item.

Payment shall be at the unit price bid per each retrofit and shall include full compensation for furnishing all labor, materials, tools, equipment and incidentals and for doing all work involved with water service retrofits as specified in these Special Provisions and as directed by the Engineer.

Item No. 14 Meter Retrofit of 4 inch Water Service
Item No. 15 Meter Retrofit of 6 inch Water Service

This item shall consist of installing a four (4) or six (6) inch water meter on existing water services where indicated on the list of addresses, and in accordance with Section 10 and 27 of the Standard Specifications, Standard Drawings W-509, W-515 and W608, and these Special Provisions. The meter will be supplied by the City.

The list of addresses is located in Appendix A of these Special Provisions, which identifies the properties to be retrofitted. Water service locations are included as a reference only and in no guarantee is made of their accuracy.

Contractor shall locate all water service laterals. Locating services shall be performed by a qualified person, in accordance with the requirements of Underground Service Alert. All cost shall be borne by the Contractor. USA markings shall be verified by the Contractor.

Contractor shall furnish and install pipe, fittings, meter boxes, lids, valves, standpipes, bypass, valve boxes, concrete, supports and all other necessary components to properly install meters.

The Contractor shall reconnect the existing water service on the property owners side of the meter box so that the water customer's water service is in service when this item is complete.

For water services with an existing backflow device and where the meter is installed on the backflow device, Contractor shall retest the backflow device. Testing shall be done by personnel certified for testing said device.

Surface restoration shall be in accordance with the section entitled "Pavement Cutting and Surface Restoration" of these Special Provisions, and shall be paid for under this item. Concrete restoration beyond 20.25 sq. ft. per each retrofit location, and directed by the Engineer, shall be paid under a separate bid item.

Payment shall be at the unit price bid per each water meter retrofit and shall include full compensation for furnishing all labor, tools, equipment and incidentals and for doing all work involved with the installation of water meters as specified in these Special Provisions and as directed by the Engineer.

Item No. 16 Hybrid Water Service to Install (Front Hose Bib)
Item No. 17 Hybrid Water Service to Install (Rear Hose Bib)

Contractor shall install a new water service where indicated on the Plans beginning at the water main and ending at the hose bib located to the front, side, or rear of the house in accordance with Sections 10, 27 & 38 of the Standard Specifications, these Special Provisions, and the UPC. Each hybrid water service shall include furnishing and placing pipe, saddle, corporation stop, meter box and lid, meter, and all necessary fittings to properly connect to the existing hose bib.

The list of addresses located in Appendix A of these Special Provisions identifies the properties where a hybrid water service shall be installed. The locations described are a reference only and in no guarantee of accuracy is made thereof.

For properties located on a corner and where the Contractor elects to connect to the rear of the house to minimize the length of the water service shall be paid for under a "Front Hose Bib" item.

Connections to existing hose bibs shall include, but are not limited to, furnishing and installing shut off valves, unions and other fittings that are missing, broken, of galvanized material, or inoperable.

For services connected to the front (or side) of the structure, up to eighty feet of pipe shall be included as part of the Front Hose Bib. For services connected to the back of the structure, up to 150 feet of pipe shall be included as part of the Rear Hose Bid item.

Contractor shall abandon existing water services, once the new water service is connected and operable. The Contractor shall turn off the corporation stop and cut and abandon service at the corporation stop and hose bib prior to making the new water service connection. If there are hose bibs off the service, the Contractor shall cut and cap the service on the far side of the hose bib so that the hose bibs remain operable. If the Contractor is unable to locate either the curb or corporation stops, he shall use an Engineer approved alternate construction method to abandon the existing water service.

Contractor shall remove the existing house shut off valve and riser, and plug the above ground tee.

Contractor shall locate all water service laterals. Locating services shall be performed by a qualified person, in accordance with the requirements of Underground Service Alert. All cost shall be borne by the Contractor. USA markings shall be verified by the Contractor.

Surface restoration shall be in accordance with the section entitled “Pavement Cutting and Surface Restoration” of these Special Provisions, and shall be paid for under this item. Concrete restoration beyond 20.25 sq. ft. per each meter box installation shall be paid under a separate bid item.

The replacement of existing concrete patios and walkways, driveways, and sidewalks on private property in order to construct this item, shall be paid for under a separate item.

Payment shall be at the contract unit price bid for each water service installed and connected from the main to hose bib and shall include full compensation for furnishing all labor, materials, tools and equipment, and for performing all work necessary to complete this item in place

Item No. 18 Substandard Water Service to Replace

Substandard water services encountered during construction shall be removed and replaced. A water service that is not made of copper or HDPE is considered substandard. Water service shall be replaced in accordance with Sections 10, 27, and 38 of the Standard Specifications. Pipe of HDPE shall have locating wire installed. Only substandard water services two (2) inches and smaller shall be replaced under this item.

Included in this item is the installation of a new curb stop and pipe. Water service shall be replaced from the water main to the existing curb stop or meter box at the property. The service piping placed shall match existing size, or a minimum of 1-inch diameter, whichever is greater.

If the existing curb stop or meter box is located behind the sidewalk, the Contractor shall replace the service pipe back to the existing curb stop. If the curb stop is located under a concrete surface, the Contractor may tunnel no more than three (3) feet under the concrete to connect to the existing curb stop. If tunneling is used, the Contractor shall use a CDF material to backfill the area. The service must be embedded in six (6) inches of sand prior to placing CDF. If existing corporation stop or gate valve cannot be reused through no fault of the Contractor, the work associated with installing a new corporation stop or gate valve will be considered extra work and paid per Section 8 of the Standard Specifications.

The Contractor shall reconnect the existing water service on the property owner's side of the meter box so the residential water system is operable when this item is complete. (The installation of the meter box shall be paid for under a separate item.)

All removed items shall become the property of the Contractor, and shall be disposed of away from the project site.

The exact number and location of substandard water services to replace shall be determined in the field. The quantity of substandard water services to be replaced shown on the Proposal is for bidding purposes only. The unit price indicated for substandard services to be replaced will not be adjusted because the actual number of required substandard services varies from the quantity shown in the Proposal.

Contractor shall saw cut and repair or replace existing surface. Surface restoration shall include any surface, including street, curb, gutter, sidewalk, sod, shrubbery, and fencing. Surface restoration associated with this item shall be performed as specified elsewhere in these Special Provisions and paid for under this item.

Payment shall be at the unit price bid for each substandard water service replaced and shall include full compensation for furnishing all labor, material, tools, equipment and incidentals and for doing all work involved in replacing substandard water services as specified in these Special Provisions and as directed by the Engineer

Item No. 19 Water Mains and Fittings to Abandon

Existing main pipes, valves, tees, crosses, saddles, and taps shall be removed or abandoned as shown on the Plans, in accordance with these Special Provisions, and as directed by the Engineer.

Work to abandon various mains is located in Appendix A of these Special Provisions.

All abandoned taps from live mains shall be removed such that no protrusions remain. All portions of pipe to be abandoned shall be plugged at each end by filling with a minimum two (2) feet of concrete. Steel pipe shall be abandoned by welding a ¼ inch thick steel plate on cut ends. In the event that a valve shutdown does not result in a positive shutdown, use of a restrained mechanical joint cap will be subject to approval of the Engineer. All methods of abandonment shall be paid for under this item.

Removal of existing valves shall include removing all appurtenances associated with the valve, including, but not limited to, riser, valve box and lid.

All removed items shall become the property of the Contractor, and shall be disposed of away from the project site.

Surface restoration associated with this item shall be performed as specified elsewhere in these Special Provisions and paid for under this item.

Payment shall be at the contract lump price indicated in the proposal, and shall include full compensation for disposal of removed items, pugging of all abandoned pipe, pipe repairs, surface restoration, and all work necessary to complete this item in place.

Item No. 20 Water Service to Abandon

Water services shall be abandoned on parcels with multiple services and the property owner elects to abandon an extra service, as specified in these Special Provisions.

Contractor shall turn off the corporation stop, and cut and plug service at the corporation stop. The curb stop shall be turned off; the stand pipe filled with concrete; and the lid sealed with grout. The house shut off valve and riser shall be removed and the above ground tee shall be plugged.

Surface restoration shall be performed as specified elsewhere in these Special Provisions and shall be paid for under this item. Surface restoration shall include any surface: asphalt, concrete, sod, shrubbery, and fencing.

Payment shall be at the unit price bid for each water service abandoned and shall include full compensation for furnishing all materials, labor, tools, equipment, and incidentals for doing all work necessary to complete this item in place.

Item No. 21 Concrete to Replace

Concrete encountered on private property shall be removed and replaced as necessary to install and connect residential water services and to abandon back yard water services and shall be paid for under this item. Concrete shall meet the applicable portions of Sections 10, 19, and 24 of the Standard Specifications. Limits of concrete removal and replacement shall be approved by the Engineer.

The quantity of concrete shown on the Proposal is for bidding purposes only. The unit price indicated will not be adjusted because the actual quantity varies from the quantity shown on the Proposal.

This item shall cover all concrete pavement replacement not specified in the previous bid items. The removal and replacement of on-site concrete patios and walkways, driveways, and sidewalks in order to construct new water services, shall be paid for under this item. Where directed by the Engineer, the Contractor shall remove concrete pavement and replace the surface in accordance with the section of the Water Construction Requirements of these Special Provisions, entitled "Pavement Cutting and Surface Restoration" and shall be paid for under this item of the contract. Unless otherwise directed by the Engineer, newly placed concrete paving shall match existing pavement edges. Limits of concrete removal and replacement shall be approved by the Engineer prior to work.

Included in this item are the saw cutting, excavation, removal and disposal of existing concrete pavement. Existing manhole/vault head and covers, valve or meter box and lids, castings and other associated appurtenances shall be salvaged and reset at the proposed grades. At the Engineers discretion, any box or lids damaged by the Contractor's operation shall be repaired or replaced by the Contractor for no additional charge.

Payment shall be at the unit price bid per square foot of concrete to remove and replace and shall include full compensation for furnishing all labor, material, tools, equipment, incidentals, and for performing all work necessary to complete this item in place.

Item No. 22 Asphaltic Concrete to Replace

This item shall include miscellaneous asphaltic concrete removal and replacement for right-of-way and private property repairs. This work is not shown on the Plans but shall be performed by the Contractor at the direction of the Engineer.

Asphalt replacement for the new service laterals, new water main and valves, water abandonments and connections are not included in this item.

Asphalt shall be replaced in accordance with the Standard Specifications and these Special Provisions.

The quantity of asphalt paving shown on the Proposal is for bidding purposes only. The unit price indicated will not be adjusted because the actual quantity varies from the quantity shown on the Proposal.

Payment shall be at the unit price bid per square foot of asphaltic concrete to remove and replace and shall include full compensation for furnishing all labor, material, tools,

equipment, incidentals, and for performing all work necessary to complete this item in place.

Item No. 23 Unsuitable Material to Replace

This item shall consist of furnishing all labor, equipment and materials to remove and replace unsuitable materials in accordance with the requirements in Section 14-8 of the Standard Specifications, these Special Provisions and as directed by the Engineer.

Measurement for payment for unsuitable material shall be based upon a weight of the material place based on conversion factor of 140 pounds per cubic foot to verify unsuitable material replaced.

Payment shall be at the contract unit price bid per ton for unsuitable material removed and replaced and shall include full compensation for furnishing all labor, materials, tools and equipment, and for performing all work necessary to complete this item in place.

END OF SECTION

APPENDIX A

Project Addresses

Water Book Page JJ18

Water Book Page JJ21

Water Book Page KK21

Water Book Legend

Oak Park (5M8)					
STREET_#	STREET_NAM	WS_TapSize	WS_CurbSto	(E) Mtr Status	(P) Work
4163	6TH AV			NO METER	RETROFIT
4408	6TH AV	1.0	21' EEC of San Diego @ NPL of 6th	NO METER	RETROFIT
4409	6TH AV	0.75	3' EWLL, 5' NNC (in Standpipe)	NO METER	RETROFIT
4423	6TH AV	1.0	92' EEC of San Diego @ NPL of 6th	NO METER	RETROFIT
4432	6TH AV	1.0	22' EWLL, 19 1/2' WELL, on SPL of 6th	NO METER	RETROFIT
4435	6TH AV	1.0	1) 6' NNC of 6th Avenue□□2) 15' EWLL	NO METER	RETROFIT
4439	6TH AV	1.0	15' EWLL- 6' NNC in box	NO METER	RETROFIT
4448	6TH AV	1.0	11' WEPL of Lot, 6" SSPL of 6th	NO METER	RETROFIT
3859	7TH AV	1.0	4 1/2' EWLL, 1 1/2' NNC of 7th Avenue in S/P	NO METER	RETROFIT
3875	7TH AV	1.0	158' EEPL of Martin Luther King @ SPL of 7th	NO METER	RETROFIT
3876	7TH AV	1.0	10' WEPL of 3876 7th Avenue 1' SSC of 7th Avenue	NO METER	RETROFIT
3883	7TH AV			NO METER	RETROFIT
3889	7TH AV	1.0	168' EEPL of Martin Luther King @ NPL (Sarto Blvd)	NO METER	RETROFIT
3894	7TH AV	1.0	On WLL, Behind Curb in S/P	NO METER	RETROFIT
3900	7TH AV	1.0	40' EEPL of 39th @ELL @ SPL of 7th	NO METER	RETROFIT
3906	7TH AV	1.0	40' WELL (or on WLL), 2' SSC of 7th	NO METER	RETROFIT
3914	7TH AV	1.0	29' WELL, 13' EWLL, 2' SSC of 7th	NO METER	RETROFIT
3918	7TH AV	1.0	5' WELL @ NC of 7th, 132' EEC of 39th	NO METER	RETROFIT
3924	7TH AV	1.0	6' EWLL & 2' SSC of 7th Avenue in valve Box	NO METER	RETROFIT
3928	7TH AV	1.0	6' EWLL, 2' SSC of 7th Avenue in Valve box	NO METER	RETROFIT
3931	7TH AV	1.0	87' NNC of 7th, 45' SNLL, 10' EWPL of Alley	NO METER	RETROFIT
3932	7TH AV	1.0	12' SSC of 7th Avenue on EPL in Standpipe	NO METER	RETROFIT
3933	7TH AV	1.0	56' NNC of 7th @ EPL of Alley	NO METER	RETROFIT
3936	7TH AV	1.0	3' SSC of 7th Avenue, on WLL	NO METER	RETROFIT
3946	7TH AV	0.75	23' SSC of 7th, 8' WWC of Sa Solidad	NO METER	RETROFIT
3953	7TH AV	1.0	9' NNC of 7th @ E Alley Line	NO METER	RETROFIT
3963	7TH AV			NO METER	RETROFIT
4112	7TH AV	1.0	1) 1' ewll - 5' ssc (7/13/07)□□2) On WLL & on SPL of 7th	NO METER	RETROFIT
4116	7TH AV		20' EWLL, 6' SSC of 7th	NO METER	RETROFIT
4126	7TH AV	1.0	9' EWLL, 33' WELL, 5' SSC of 7th	NO METER	RETROFIT
4136	7TH AV	1.0	18' WELL, 4 1/2' SSC of 7th	NO METER	RETROFIT
4141	7TH AV	1.0	98' EEPL of Sen Rafael @ NPL of 7th	NO METER	RETROFIT
4144	7TH AV	1.0	NPL	NO METER	RETROFIT
4400	7TH AV	0.75	41' EEPL of San Dieep @ SPL of 7th	NO METER	RETROFIT
4408	7TH AV	0.75	6' SSC of 7th on WLL	NO METER	RETROFIT
4409	7TH AV	0.75	5' NNC of 7th on ELL	NO METER	RETROFIT
4416	7TH AV	0.75	120' EEPL of San Diego @ SPL of 7th	NO METER	RETROFIT
4419	7TH AV	1.0	20' EWLL, Behind Sidewalk	NO METER	RETROFIT
4424	7TH AV	1.0	1) 6' SSC - 7' EWLL in box (11/22/06)□□2) 4 1/2' EWLL @ SPL of 7th	NO METER	RETROFIT

Oak Park (5M8)					
STREET_#	STREET_NAM	WS_TapSize	WS_CurbSto	(E) Mtr Status	(P) Work
4425	7TH AV	0.75	38' WELL, 1' WWLL, on NPL of 7th	NO METER	RETROFIT
4432	7TH AV		On ELL @ Back of Sidewalk	NO METER	RETROFIT
4433	7TH AV	1.0	20' EWLL, 20' WELL, 5' NNC of 7th	NO METER	RETROFIT
4441	7TH AV	1.0	201' EEPL of San Diego @ NPL of 7th	NO METER	RETROFIT
4448	7TH AV	1.0	5' EWLL @ SPL of 7th	NO METER	RETROFIT
4449	7TH AV	1.0	17' WELL 6' NNC of 7th Avenue	NO METER	RETROFIT
4453	7TH AV	1.0	38' EWLL, 6' SSC of 6th (2' Behind Sidewalk in S/P)	NO METER	RETROFIT
4456	7TH AV	0.75	4' SSC of 7th on WLL	NO METER	RETROFIT
4468	7TH AV	0.75	141' WWPL of Stockton @ SPL of 7th	NO METER	RETROFIT
4469	7TH AV	0.75	21 1/2' EWLL, 38 1/2' WELL, 6" NNPL of 7th	NO METER	RETROFIT
3867	8TH AV	1.0	141' EEPL of Martin Lither King @ NPL of 8th	NO METER	RETROFIT
3876	8TH AV			NO METER	RETROFIT
3883	8TH AV	1.0	281' EEPL of Martin Luther King 1' NNPL of 8th	NO METER	RETROFIT
3901	8TH AV	1.0	5' NNC of 8th on WLL, 4 1/2' EWLL	NO METER	RETROFIT
3909	8TH AV	1.0	299' WWC of La Solidad @ NPL of 8th	NO METER	RETROFIT
3915	8TH AV	1.0	14 1/2' EWLL, 26 1/2' WELL, @ NPL of 8th	NO METER	RETROFIT
3927	8TH AV	1.0	3' SNLL, 37' NSLL, 9' Back of Curb	NO METER	RETROFIT
3935	8TH AV	1.0	129' WWC of La Solidad @ NPL of 8th @ ELL, Back of Sidewalk	NO METER	RETROFIT
3940	8TH AV	1.0	21 1/2' EWLL, 25 1/2' S of main @ SPL of 8th	NO METER	RETROFIT
3948	8TH AV	1.0	5 1/2' EWLL, 44 1/2' WELL, 2' SNPL	NO METER	RETROFIT
3949	8TH AV	1.0	1' EWLL, 5' NNC of 8th	NO METER	RETROFIT
3956	8TH AV	1.0	23' WWC of San Carlos, 4' SSC of 8th Ave in S/P	NO METER	RETROFIT
3958	8TH AV	1.0	EPL, 110' SSPL of 8th Avenue	NO METER	METER
3962	8TH AV	1.0	21' WELL, 2' NSLL	NO METER	METER
3967	8TH AV	1.0	6' NNC of 8th Av, 1' WELL of 3969 8th Av in standpipe	NO METER	RETROFIT
3970	8TH AV	1.0	5' SSC - 13' EWLL in box (4/16/07)	NO METER	METER
3971	8TH AV	1.0	57' EEC of La Solidad Way	NO METER	RETROFIT
3975	8TH AV	1.0	40' NNC of 8th, 6' WWC of San Carlos Way	NO METER	RETROFIT
3977	8TH AV			NO METER	RETROFIT
3978	8TH AV	1.0	124' WWPL of 40th @ WPL of San gose	NO METER	RETROFIT
3979	8TH AV	1.0	64' SNLL, 5' EEC of San Carlos	NO METER	RETROFIT
3981	8TH AV	1.0,1.5	38' EWLL-70' WELL-6' NNC of 8th Ave	NO METER	RETROFIT (2) 1" & 1½"
3982	8TH AV	1.0	124' WWPL, 2 1/2' WWLL, 6" SSPL of 8th	NO METER	RETROFIT
3983	8TH AV	1.0	62 1/2' WWC of 40th	NO METER	RETROFIT
3987	8TH AV	1.0	93' NNC of 8th Ave-5' WWC of 40th St in box	NO METER	RETROFIT
4000	8TH AV	1.0	37' SSPL of 8th	NO METER	RETROFIT
4001	8TH AV	1.0	40' NNPL of 8th @ EPL of 40th	NO METER	RETROFIT
4009	8TH AV	1.0	47' SNLL, 1' WWC	NO METER	RETROFIT

Oak Park (5M8)					
STREET_#	STREET_NAM	WS_TapSize	WS_CurbSto	(E) Mtr Status	(P) Work
4010	8TH AV	1.0	26 1/2' WEPL of lot, 88' EEPL of 40th, on SPL of 8th	NO METER	RETROFIT
4042	8TH AV	1.0	1) 54' NSLL, 5' EEC in c/s box (08/02/07)□□2) 54' NSLL, 1' behind Sid	NO METER	RETROFIT
4047	8TH AV	1.0	15' EWLL, 9' NNC of 8th	NO METER	RETROFIT
4050	8TH AV	1.0	75' EEC of Santa Cruz @ SPL of 8th, @ WLL	NO METER	RETROFIT
4060	8TH AV	1.0	1/2' SSPL of 8th, ELL	NO METER	RETROFIT
4069	8TH AV	1.0	27' EWLL, 1' NNC of 8th Av in standpipe	NO METER	RETROFIT
4077	8TH AV	1.0	11' NNC of 8th, 2' EWLL in box	NO METER	RETROFIT
4085	8TH AV	1.0	31' EWLL, 9' WELL	NO METER	RETROFIT
4090	8TH AV	1.0	68' WWPL of 41st, 75' NNC of 41st, @ SPL of 8th	NO METER	RETROFIT
4093	8TH AV	1.0	12' WWPL of 41st @ NC of 8th	NO METER	RETROFIT
4097	8TH AV	1.0	198' WWPL of 42rd @ SPL	NO METER	RETROFIT
4103	8TH AV	1.0	24' WELL, 1' NNC 8th Avenue	NO METER	RETROFIT
4112	8TH AV	1.0	1) 15.5' SSC of 8th Ave., 8.5' EEC of 41st St. in c/s □□box (1/18/06)□□	NO METER	RETROFIT
4114	8TH AV	1.0	1' EWLL of 8th, 6' SSC of 8th	NO METER	RETROFIT
4123	8TH AV	1.0	1) 25' EWLL, 62' WWC of 42nd St. in box (10/13/05)□□2) 26' EWLL, 5	NO METER	RETROFIT
4130	8TH AV		26' WELL- 2' SSC of 8th Avenue	NO METER	RETROFIT
4201	8TH AV	1.0	1) 80' NNC of 8th, 1' EEC of 42nd (10/13/05)□□2) 80' NNC of 8th, 1' E	NO METER	RETROFIT
4216	8TH AV	1.0	84' EEPL of 42nd @ NPL of 8th	NO METER	RETROFIT
4217	8TH AV		1) 29' WELL, 13' EWLL (10/13/05)	NO METER	RETROFIT
4224	8TH AV	1.0	2' EWLL, 6' SSC of 8th Ave in box	NO METER	RETROFIT
4225	8TH AV	1.0	16' WELL, 6' NNC of 8th Avenue	NO METER	RETROFIT
4230	8TH AV	1.0	55' SNLL, 1' WELL	NO METER	RETROFIT
4303	8TH AV	1.0	26' WELL, 5' NNC of 8th	NO METER	RETROFIT
4308	8TH AV	1.0	26' EWLL, 4' SSC of 8th in S/P	NO METER	RETROFIT
4316	8TH AV	1.0	9' EWLL, 65' SSPL of 8th	NO METER	RETROFIT
4317	8TH AV	1.0	8' WELL, 5' NNC of 8th, 1' Back of walk in S/P	NO METER	RETROFIT
4329	8TH AV	0.75	6' EEC - 1' SNLL 44st	NO METER	RETROFIT
4330	8TH AV	1.0	3' WWC of 44th @ SC of 8th	NO METER	RETROFIT
4346	8TH AV	1.0	15' EWLL 5' SSC in box	NO METER	RETROFIT
4354	8TH AV	1.0	34' NSLL, 1' Back of Curb	NO METER	RETROFIT
4400	8TH AV	1.0	43' EEC of 44th @ EPL of lot @ SPL of 8th	NO METER	RETROFIT
4408	8TH AV	1.0	44' EEC of 44th @ WPL of lot @ SPL of 8th	NO METER	RETROFIT
4416	8TH AV	1.0	7' EWLL - 4' SSC in box	NO METER	RETROFIT
4424	8TH AV	1.0	120' WWPL of 45th @ SPL of 8th	NO METER	RETROFIT
4434	8TH AV	1.0	17' EWLL, 4' SSC of 8th in S/P	NO METER	RETROFIT
4441	8TH AV	1.0	24' NNPL of 8th @ EPL of San Diegs Way	NO METER	RETROFIT
4449	8TH AV	1.0	2' WELL, Back of Sidewalk	NO METER	RETROFIT
4457	8TH AV	1.0	5' NNC of 8th, 1' EWLL of Property	NO METER	RETROFIT
4469	8TH AV	1.0	1' NNPL of 8th on ELL	NO METER	RETROFIT

Oak Park (5M8)					
STREET_#	STREET_NAM	WS_TapSize	WS_CurbSto	(E) Mtr Status	(P) Work
4501	8TH AV	1.0	1) WLL 5' NNC IN C/S BOX (1/28/07)□□2) 10' WEPL of 45th @ NPL c	NO METER	RETROFIT
4511	8TH AV	1.0	17' EWLL, 3' NNPL of 8th	NO METER	RETROFIT
4523	8TH AV	1.0	16' EWLL, 6'NNC in C/S box.	NO METER	RETROFIT
4525	8TH AV	1.0	4 1/2' NNC of 8th on ELL of 8th	NO METER	RETROFIT
4533	8TH AV	1.0	4' NNC on WLL	NO METER	RETROFIT
4541	8TH AV	1.0	232' EEPL of 45th @ NPL of 8th	NO METER	RETROFIT
4225	8TH AV 2			NO METER	RETROFIT
0	9TH AV			NO METER	RETROFIT
3332	9TH AV	1.0	231' EEC of 33rd @ SPL of 9th	NO METER	RETROFIT
3887	9TH AV			NO METER	RETROFIT
4500	9TH AV	1.0	3' WELL, 44' EEL of 45th, 2' SSC of 9th	NO METER	RETROFIT
4516	9TH AV	0.75	1' SSC of 9th @ WLL	NO METER	RETROFIT
4528	9TH AV	1.0	1' SSC of 9th @ WLL	NO METER	RETROFIT
4550	9TH AV	1.0	1) 2' WELL, 1' SSC of 9th Ave. (8/15/05)□□2) 2' WELL, 1' SSC of 9th	NO METER	RETROFIT
4556	9TH AV	1.0	280' EEPL of 45th @ SPL of 9th	NO METER	RETROFIT
4566	9TH AV	1.0	1' SSC of 9th, 243' WWPL of Stockton	NO METER	RETROFIT
4568	9TH AV	1.0	1' EWLL, 1 1/2' SSC of 9th (in Park Strip)	NO METER	RETROFIT
4580	9TH AV		2' SSC of 9th @ ELL	NO METER	RETROFIT
4588	9TH AV	1.0	1' WELL, 2' SSC of 9th @ SPL, in S/P @ WLL	NO METER	RETROFIT
4400	10TH AV	0.75	10' EEC of 44th, 9' SSC of 10th	NO METER	RETROFIT
4401	10TH AV	1.0	16' EEC of 44th - @ NPL of 10th	NO METER	RETROFIT
4408	10TH AV	0.75	2' EELL, 7 1/2' SSC of 10th	NO METER	RETROFIT
4409	10TH AV	1.0	1) 28' ewll - 6' nnc (6/5/07)□□2) 28 1/2' EWPL of Lot, 78 1/2' EEC of 4	NO METER	RETROFIT
4416	10TH AV	1.0	9' SSC of 10th, 3' EWLL	NO METER	RETROFIT
4417	10TH AV	1.0	24' WELL, 111' EEPL of 44th, @ NC of 10th	NO METER	RETROFIT
4419	10TH AV			NO METER	RETROFIT
4426	10TH AV	1.0	32' WELL @ SPL of 10th @ EPL of Lot	NO METER	RETROFIT
4432	10TH AV	0.75	8' SSC of 10th, 1' EWLL	NO METER	RETROFIT
4433	10TH AV	0.75	180' EEPL of 44th @ NPL	NO METER	RETROFIT
4440	10TH AV	1.0	1' WELL, 6' SSC in Box	NO METER	RETROFIT
4500	10TH AV	0.75	on WLL, 6' SSC	NO METER	RETROFIT
4508	10TH AV	1.0	15' EWLL, 31' WELL, 9' SSC in C/S box	NO METER	RETROFIT
4509	10TH AV	1.0	9'NNC, 1'WELL in C/S box	NO METER	RETROFIT
4516	10TH AV	1.0	15' WELL,L 19' EWLL, 8' SSC of 10th	NO METER	RETROFIT
4517	10TH AV	1.0	8' NNC of 10th Av, 1'WWLL in C/S box	NO METER	RETROFIT
4525	10TH AV	0.75	457' EEC of 44th, @ EPL of Lot, @ SPL of 10th	NO METER	RETROFIT
4526	10TH AV	0.75	9' SSC, 1' WELL in S/P	NO METER	RETROFIT
4528	10TH AV	1.0	11 1/2' WELL, 1' SSPL of 10th	NO METER	RETROFIT
4537	10TH AV	0.75	2' EWLL, 1' NNC of 10th Ave. in box	NO METER	RETROFIT

Oak Park (5M8)					
STREET_#	STREET_NAM	WS_TapSize	WS_CurbSto	(E) Mtr Status	(P) Work
4540	10TH AV	0.75	2' WELL & 7' SSC of 10th Avenue in Standpipe	NO METER	RETROFIT
4545	10TH AV	1.0	16' WELL, 1' NNC of 10th	NO METER	RETROFIT
4548	10TH AV	1.0	22' WELL, 12' EWLL, @ SPL of 10th	NO METER	RETROFIT
4549	10TH AV	1.5	8' NNPL of 10th, 4' EWLL	NO METER	RETROFIT
4556	10TH AV	1.5	27' S of Main, 7' S of Curb of 10th, 9' EWLL	NO METER	RETROFIT
4557	10TH AV			NO METER	RETROFIT
4564	10TH AV	1.0	10' E of WLL of 10th, 1 1/2' NNC of 10th	NO METER	RETROFIT
4600	10TH AV	1.0	14' WELL - 3' Behind Side Walk	NO METER	RETROFIT
4610	10TH AV	1.0	18' WELL, 27' EWLL, 8' SSC of 10th	NO METER	RETROFIT
4622	10TH AV	0.75	8' EWLL, 8' SSC of 10th	NO METER	RETROFIT
4624	10TH AV	0.75	11' EWLL of 10th, 34' WELL, 1' SSC of 10th	NO METER	RETROFIT
4634	10TH AV	0.75	21' WELL, 28' EWLL	NO METER	RETROFIT
0	11TH AV			NO METER	RETROFIT
4000	11TH AV	1.0	41' NNPL of Alley, 5' EEC of 40th	NO METER	RETROFIT
4001	11TH AV	1.0	39' EEC of 40th St, back of sidewalk in standpipe	NO METER	RETROFIT
4008	11TH AV	1.0	3' EWLL, 5' SSC 11th Avenue 41' EEPL 40th St.	NO METER	RETROFIT
4016	11TH AV			NO METER	RETROFIT
4024	11TH AV	1.0	33' WWPL of Santa Cruz @ SPL	NO METER	RETROFIT
4025	11TH AV	1.0	5' WELL, 1' NNPL of 11th 7' NNC	NO METER	RETROFIT
4034	11TH AV	1.0	2' EWLL, 4' SSC of 11th	NO METER	RETROFIT
4040	11TH AV	0.75	1) repair: 8' EWLL, 6' NSC (10/28/05)□□2) 32' WELL, 8' EWLL, 4' SSC	NO METER	RETROFIT
4041	11TH AV	1.0	24' EEPL of Santa Cruz @ NPL	NO METER	RETROFIT
4048	11TH AV	1.0	27 1/2' WELL, 12' EWLL, 1' SSPL of 11th 5' SSC	NO METER	RETROFIT
4049	11TH AV	1.0	14' WELL, 6' NNC of 11th	NO METER	RETROFIT
4056	11TH AV	1.0	11 1/2' EWLL, 4 1/2' SSC of 11th	NO METER	RETROFIT
4057	11TH AV	1.0	110' EEPL of Santa Cruz Way @ NPL	NO METER	RETROFIT
4064	11TH AV	1.0	14' WELL, 26' EWLL, 4 1/2' SC of 11th	NO METER	RETROFIT
4065	11TH AV	1.0	138' EEPL of Santa Cruz Way @ NPL	NO METER	RETROFIT
4072	11TH AV	1.0	206' EEPL of Santa Cruz Way @ NPL	NO METER	RETROFIT
4077	11TH AV	1.0	17' WELL- 5' NNC of 11th Avenue in C/S Box	NO METER	RETROFIT
4080	11TH AV	1.0	21 1/2' WWC of San Jose Way, 10' EWPL of Lot 6" SSPL of 11th	NO METER	RETROFIT
4085	11TH AV	1.0	20' EEPL of San Jose Way, 1' NNPL of 11th	NO METER	RETROFIT
4095	11TH AV	1.0	19' WELL, 5' NNC of 11th	NO METER	RETROFIT
4100	11TH AV	1.0	11 1/2' EWLL, 4 1/2' SSC of 11th (In Stand Pipe)	NO METER	RETROFIT
4105	11TH AV	0.75	2' EELL of 11th, 5' NNC of 11th	NO METER	RETROFIT
4108	11TH AV	1.0	17' WELL, 6' SSC of 11th	NO METER	RETROFIT
4116	11TH AV	1.0	6' WELL, 4' SSC	NO METER	RETROFIT
4124	11TH AV	1.0	5' EWLL, 35' WELL, 3' SSPL of 11th In Standpipe	NO METER	RETROFIT
4132	11TH AV	1.0	W/V is 5' SSC on EPL	NO METER	RETROFIT

Oak Park (5M8)					
STREET_#	STREET_NAM	WS_TapSize	WS_CurbSto	(E) Mtr Status	(P) Work
4140	11TH AV	1.0	25' WELL, 15' EWLL, 5' SSC of 11th in Box	NO METER	RETROFIT
4141	11TH AV	1.5	96' WELL - 11' NNC of 11th Avenue	NO METER	RETROFIT
4148	11TH AV	1.0	1' EWLL, 2' SNPL of Lot, 48' WWC of 42nd	NO METER	RETROFIT
4156	11TH AV	1.0		NO METER	RETROFIT
4200	11TH AV	1.0	31 1/2' EEPL of 42nd, 18' WELL, 1' SSPL of 11th	NO METER	RETROFIT
4210	11TH AV		On WLL, 18' WELL, 6' SSC of 11th Av in standpipe	NO METER	RETROFIT
4220	11TH AV	1.0	5' EEPL of 42nd @ SPL of 11th	NO METER	RETROFIT
4230	11TH AV	1.0	19' WELL, 5' SSC of 11th Av	NO METER	RETROFIT
4250	11TH AV	1.0	1) 12' EWLL, 7' SSC in s/p (4/29/07)□□1) 12' ewll - 6' ssc in box (5/4/0	NO METER	RETROFIT
4310	11TH AV	1.0	1) 21' well - 7' ssc in box (7/6/07)□□2) 24' WELL, 6' SSC of 11th Avenu	NO METER	RETROFIT
4312	11TH AV	1.0	34' EWLL @ SPL of 11th	NO METER	RETROFIT
4400	11TH AV	0.75	60' EEC of 44th , 27' S of Main	NO METER	RETROFIT
4401	11TH AV	1.0	49' EEC of 44th @ EPL of Lot, 1' NNC of 11th	NO METER	RETROFIT
4408	11TH AV	0.75	3' EWLL, 1' SSC of 11th	NO METER	RETROFIT
4409	11TH AV	1.0	1) 49' EEC o/48th St. - 2' NNC o/11th Ave. (12/11/06)□□2) 1' EWLL, 3	NO METER	RETROFIT
4417	11TH AV	0.75	2' EELL, 2' NNC of 11th	NO METER	RETROFIT
4420	11TH AV	0.75	36'EWLL-4'NSLL in box	NO METER	RETROFIT
4424	11TH AV	1.0	1) 2' EWLL, 1' SSC in c/s box (2/27/06)□□2) 1' EWLL, 1' SSC of 11th	NO METER	RETROFIT
4425	11TH AV	0.75	3' EWLL, 3' NNC of 11th	NO METER	RETROFIT
4426	11TH AV	1.0	17' WELL, 1' SSC of 11th	NO METER	RETROFIT
4433	11TH AV	0.75	182' EEPL of 44th	NO METER	RETROFIT
4443	11TH AV	1.0	20' EWLL, 25' WELL, @ NC of 11th	NO METER	RETROFIT
4500	11TH AV	0.75	2' EWLL, 1' SSC in box	NO METER	RETROFIT
4501	11TH AV	1.0	4 1/2' EWPL of Lot, N Curb of 11th	NO METER	RETROFIT
4516	11TH AV	1.0	13' WELL, 1' SSC of 11th in c/s box	NO METER	RETROFIT
4519	11TH AV	0.75	319' EEPL of 44th	NO METER	RETROFIT
4523	11TH AV	0.75	8' NNC, 9' WELL of 11th	NO METER	RETROFIT
4525	11TH AV	0.75	24' WELL, Back of Side Walk	NO METER	RETROFIT
4530	11TH AV	1.0	6' WELL, 1' SSC of 11th	NO METER	RETROFIT
4532	11TH AV	1.0	23' EWLL, 29' WELL, 1" SSC of 11th	NO METER	RETROFIT
4535	11TH AV	0.75	496' EEPL of 44th Street	NO METER	RETROFIT
4540	11TH AV	1.0	On WLL, 2' SSC of 11th	NO METER	RETROFIT
4545	11TH AV	1.0	1' EWLL, 6' NNC in box	NO METER	RETROFIT
4548	11TH AV	1.0	18' EELL, 8' SSC of 11th	NO METER	RETROFIT
4553	11TH AV	0.75	ELL of 11th, 6' NNC of 11th (11/02/06)	NO METER	RETROFIT
4556	11TH AV	0.75	7' SSC, 1" EWLL	NO METER	RETROFIT
4563	11TH AV	0.75	1' EWLL, 8' NNC	NO METER	RETROFIT
4564	11TH AV	0.75	3' EWLL, 8' SSC in S/P	NO METER	RETROFIT
4600	11TH AV	0.75	452 1/2' WWPL of Stockton, Back of Sidewalk	NO METER	RETROFIT

Oak Park (5M8)					
STREET_#	STREET_NAM	WS_TapSize	WS_CurbSto	(E) Mtr Status	(P) Work
4601	11TH AV	0.75	679' EEPL of 44th	NO METER	RETROFIT
4607	11TH AV	1.0	3' EWLL, 42' WELL, 1' NNPL of 11th	NO METER	RETROFIT
4608	11TH AV	0.75	6' SSC, 1' WELL	NO METER	RETROFIT
4609	11TH AV	1.0	5' NNC of 11th Avenue - on EPL	NO METER	RETROFIT
4616	11TH AV	1.0	1' WELL, 49' EWLL, @ SPL of 11th or 5' SSC of 11th Avenue on WLL	NO METER	RETROFIT
4624	11TH AV	0.75	314' WWPL of Stockton on WLL	NO METER	RETROFIT
4631	11TH AV	0.75	2' EWLL, 4 1/2' NNC of 11th	NO METER	RETROFIT
4632	11TH AV	1.0	32' WELL, 18' EWLL, 6" Back of Sidewalk	NO METER	RETROFIT
4641	11TH AV	1.0	3' EWLL, 6' NNC of 11th	NO METER	RETROFIT
4642	11TH AV	1.0	1.0": 18'EWLL, 7'SSC of 11th Av in c/s box	NO METER	RETROFIT
4650	11TH AV	0.75	30'EWLL, 19'WELL ,7'SSC of 11th in c/s box	NO METER	RETROFIT
3878	12TH AV			NO METER	RETROFIT
3883	12TH AV	0.75	6' EWLL - 5' NNC of 12th Av in box	NO METER	RETROFIT
3885	12TH AV	1.0	5' NNC of 12th Av, 12' WELL in box	NO METER	RETROFIT
3887	12TH AV	1.0	5' NNC of 12th Avenue, 3' WELL	NO METER	RETROFIT
3891	12TH AV	1.0	7' WELL - 8' NNC of 12th	NO METER	RETROFIT
3892	12TH AV	1.0	4' WELL, 8' SSC in a box	NO METER	RETROFIT
3893	12TH AV	0.75	9 1/2' EWPL of Lot @ NPL of 12th	NO METER	RETROFIT
3896	12TH AV	1.0	34' SSC of 12th @ WPL of 39th	NO METER	RETROFIT
3899	12TH AV	1.0	3' WELL - 37' EWLL - 6' NNC of 12th	NO METER	RETROFIT
3900	12TH AV	1.0	35' SSC of 12th - 5' EEC of 39th St	NO METER	RETROFIT
3901	12TH AV	1.0	30' EWLL - 15 1/2' WELL @ NPL of 12th 6' SSC of 12th	NO METER	RETROFIT
3907	12TH AV	1.0	7' WELL - 5' NNC of 12th	NO METER	RETROFIT
3908	12TH AV	1.0	6'SSC of 12th Ave-4'EWLL in c/s box	NO METER	RETROFIT
3914	12TH AV	1.0	146' WWPL of La Soledad @ SPL	NO METER	RETROFIT
3915	12TH AV	0.75	1) 12' WELL - 5' NNC in c/s box(4/6/06)□□2) Service @ 3' EWLL - Onl	NO METER	RETROFIT
3919	12TH AV	1.0	30' EWLL - 5' NNC of 12th	NO METER	RETROFIT
3920	12TH AV			NO METER	RETROFIT
3921	12TH AV	1.5	21' EWPL @ NPL of 12th	NO METER	RETROFIT
3926	12TH AV	1.0	45' WWPL of La Solidad @ SPL	NO METER	RETROFIT
3932	12TH AV	1.0	28' EEPL of La solidad - 21' WELL	NO METER	RETROFIT
3938	12TH AV	1.0	14' WELL - 36' EWLL @ NLL (Back of Sidewalk)	NO METER	RETROFIT
3943	12TH AV	1.5	42' EWLL - 18' WELL - 1 1/2' NNPL of 12th	NO METER	RETROFIT
3944	12TH AV	1.0	24' WELL, 8' SSC of 12th	NO METER	RETROFIT
3945	12TH AV	1.0	110 1/2' EEPL of La Solidad - 9' WELL @ NPL of 12th	NO METER	RETROFIT
3947	12TH AV	1.0	5' NNC, 10' EWLL	NO METER	RETROFIT
3950	12TH AV	1.0	1 1/2' SNPL - 69' WWC of Sancarlos - 28' EWLL	NO METER	RETROFIT
3951	12TH AV	1.0	34' EWLL - 7' WELL - 5' NNC of 12th in c/s box	NO METER	RETROFIT
3955	12TH AV	1.0	8' SNC 12th Avenue - 7' EWLL - 35' WELL	NO METER	RETROFIT

Oak Park (5M8)					
STREET_#	STREET_NAM	WS_TapSize	WS_CurbSto	(E) Mtr Status	(P) Work
3956	12TH AV	1.0	5'SSC, 42'WWC of San Carlos Wy in box	NO METER	RETROFIT
3962	12TH AV	1.0	5' EWLL, NPL of 12th	NO METER	RETROFIT
3965	12TH AV	1.0		NO METER	RETROFIT
3968	12TH AV	1.0	2' EWLL - 5' SSC of 12th Av in standpipe	NO METER	RETROFIT
3974	12TH AV	1.0	6' EWLL - 9' NNC of 12th	NO METER	RETROFIT
3982	12TH AV	1.0	22' EWLL, 1' behind sidewalk, 18' WELL	NO METER	RETROFIT
3988	12TH AV	1.0	22' WELL - 25' NSC of 12th - 6' SSC of 12th	NO METER	RETROFIT
3994	12TH AV	1.0	15' EWLL - 28' WWC of 40th - 24' NSC of 12th	NO METER	RETROFIT
4000	12TH AV	1.0	1) 48' NSPL, 6' EEC 40th St. (12/9/05)□□2) 53 1/2' SSC of 12th @ EP	NO METER	RETROFIT
4001	12TH AV	1	140' NNC of 12th Ave, 1' EEC of 40th St	NO METER	RETROFIT (2)
4008	12TH AV	1.0	6' SSC of 12th, 29' WELL	NO METER	RETROFIT
4018	12TH AV		30' WEPL, 9' SSC in Box	NO METER	RETROFIT
4020	12TH AV	1.0	49' WELL, 5 1/2' SSC of 12th	NO METER	RETROFIT
4031	12TH AV	1.0	209' EEPL of 40th @ SPL Back of Sidewalk	NO METER	RETROFIT
4043	12TH AV	1	8' NNC of 12th Ave - 13' EWLL in SP (3/28/07)	NO METER	RETROFIT
4055	12TH AV	1.0	6' NNC of 12th - 3' WELL in Standpipe	NO METER	RETROFIT
4067	12TH AV	1.0	13' WELL of 5' NNC	NO METER	RETROFIT
4101	12TH AV	1.0	1) 5' NNC o/12th Ave on ELL (10/30/06)□□2) ELL & 5' NNC of 12th	NO METER	RETROFIT
4107	12TH AV	1.0	20' WELL, 2 1/2' Behind Sidewalk	NO METER	RETROFIT
4118	12TH AV	1.0	4' EWLL, 1' SSC in Meter Box	NO METER	RETROFIT
4123	12TH AV	1.0	1) 31' well - 9' nnc (5/2/07)□□2) 28' EWLL, 30' WELL @ NPL of 12th	NO METER	RETROFIT
4125	12TH AV		18' WELL, 1' NNC in Meter Box	NO METER	RETROFIT
4129	12TH AV	1.0	1) 3' EWLL - 1' NNC in meter box (10/10/06)□□2) 247' WWC of 42nd,	NO METER	RETROFIT
4131	12TH AV	0.75	8 1/2' NNC of 12th	NO METER	RETROFIT
4141	12TH AV	1.0	14 1/2' EWLL, 7' NNC of 12th Avenue	NO METER	RETROFIT
4147	12TH AV	1.0	11' NNC, 45' WWC of 42nd St. in Meter Box	NO METER	RETROFIT
4180	12TH AV	1.0	46' EWLL, 6' SSC of 12th Avenue	NO METER	RETROFIT
4201	12TH AV		1 1/2' EELL, Back of Sidewalk	NO METER	RETROFIT
4208	12TH AV	1.0	23' WELL @ SPL of 12th	NO METER	RETROFIT
4211	12TH AV		7' NNC of 12th Avenue, on WPL	NO METER	RETROFIT
4215	12TH AV	1.0	On ELL, 5' WWC of 12th Avenue	NO METER	RETROFIT
4217	12TH AV	1.0	1' EWLL - 5' NNC of 12th	NO METER	RETROFIT
4218	12TH AV	1.0	10' EWLL - 5 1/2' SSC of 12th	NO METER	RETROFIT
4224	12TH AV	1.0	14' WELL - 5' SSC	NO METER	RETROFIT
4232	12TH AV	1.0	81 1/2' WWPL of 43rd @ SPL of 12th	NO METER	RETROFIT
4236	12TH AV	1.0	14' WELL - 5' SSC of 12th Avenue	NO METER	RETROFIT
4240	12TH AV	1.0	12 1/2' EWLL - 29' WELL - 5' SSC of 12th	NO METER	RETROFIT
4241	12TH AV	0.75	3'EELL, 8'NNC in c/s box	NO METER	RETROFIT
4250	12TH AV	1.0	1) 8' WELL, 6' SSC in box (4/4/06)□□2) 28 1/2' WWPL of 43rd @ SPL	NO METER	RETROFIT

Oak Park (5M8)					
STREET_#	STREET_NAM	WS_TapSize	WS_CurbSto	(E) Mtr Status	(P) Work
4251	12TH AV	1.0	3' EWLL & Back of Walk	NO METER	RETROFIT
4260	12TH AV	1.0	13' EWLL 8 1/2' SSC of 12th	NO METER	RETROFIT
4261	12TH AV			NO METER	RETROFIT
4300	12TH AV	1.0	1) 69'SSC of 4312 12th Av, 3'WELL of 4312 12th Av in □□box (8/11/05	NO METER	HYBRID
4301	12TH AV	1.0	46' EEPL of 43rd @ NPL of 12th	NO METER	RETROFIT
4309	12TH AV	1.0	66' NNC of 12th @ EPL of Lot	NO METER	RETROFIT
4311	12TH AV	1.0	65 WSC- 2' WELL on side of add. in box	NO METER	HYBRID
4312	12TH AV			NO METER	HYBRID
4319	12TH AV	0.75	49' SSPL of 12th @ West ROW	NO METER	HYBRID
4320	12TH AV	1.0	45' SNLL, 2' WWLL in box (3/29/07)	NO METER	HYBRID
4325	12TH AV	1.0	7' WWC of 44th - 1' SNLL of 12th	NO METER	RETROFIT
4400	12TH AV	0.75	56' EEC of 44th & 4 1/2' SSC of 12th	NO METER	RETROFIT
4408	12TH AV	1.0	21.5' WELL - 85' EEC of 44th	NO METER	RETROFIT
4409	12TH AV	0.75	4' WELL - 6' NNC of 12th	NO METER	RETROFIT
4416	12TH AV	0.75	27' SSC of 12th on EPL	NO METER	RETROFIT
4417	12TH AV	0.75	149' EEPL of 44th	NO METER	RETROFIT
4424	12TH AV	0.75	150' EEPL of 44th - Back of Sidewalk @ WPL	NO METER	RETROFIT
4425	12TH AV	1.0	6' WELL, 7' NNC of 12th Avenue in Standpipe	NO METER	RETROFIT
4433	12TH AV	1.0	1) 10' well - 6' nnc in c/s box (12/11/06)□□2) 238' EEPL of 44th, 11' W	NO METER	RETROFIT
4434	12TH AV	1.0	214 1/2' EEPL of 44th @ EPL of Lot 18" SS Sidewalk of 12th Avenue	NO METER	RETROFIT
4501	12TH AV	1.0	5' WELL, 5' NNC of 12th	NO METER	RETROFIT
4509	12TH AV	1.0	1 1/2' WELL - 46 1/2' EWLL @ 2' SSPL of 12th Avenue	NO METER	RETROFIT
4514	12TH AV	1.0	1 1/2' WELL, 2 1/2' Behind Sidewalk	NO METER	RETROFIT
4516	12TH AV	.75	5'SSC, 1'EWLL in S/P	NO METER	RETROFIT
4517	12TH AV	0.75	8' WELL & 5' NNC of 12th	NO METER	RETROFIT
4524	12TH AV	0.75	20' WELL, 5' SSC of 12th	NO METER	RETROFIT
4525	12TH AV	1.0	4' WELL @ NPL of 12th	NO METER	RETROFIT
4533	12TH AV	0.75	440' EEPL of 44th	NO METER	RETROFIT
4540	12TH AV	1.0	1' EWLL - 7' SSC in C/S Box	NO METER	RETROFIT
4541	12TH AV	1.0	16' WELL @ 16' N of Main	NO METER	RETROFIT
4548	12TH AV	0.75	1' WWLL & 6' SSC	NO METER	RETROFIT
4549	12TH AV			NO METER	RETROFIT
4550	12TH AV	1.0	21'EWLL-6'SSC in c/s box	NO METER	RETROFIT
4557	12TH AV	1.0	46' EWLL - 4' WELL - 5' NNC of 12th	NO METER	RETROFIT
4565	12TH AV	1.0	1) 2' NNC, 4' WELL in meter box (10/11/07)□□2) 566' WWPL of Stockt	NO METER	RETROFIT
4600	12TH AV	1.0	1) 1' WELL, 5' SSC of 12th Ave. in s/p (2/13/06)□□2) 5' SSC of 12th A	NO METER	RETROFIT
4601	12TH AV	0.75	7' WELL, 6' NNC	NO METER	RETROFIT
4608	12TH AV	0.75	53' EEPL of 46th @ Back of Sidewalk	NO METER	RETROFIT
4609	12TH AV	0.75	4' WELL & 1 1/2' Behind Sidewalk	NO METER	RETROFIT

Oak Park (5M8)					
STREET_#	STREET_NAM	WS_TapSize	WS_CurbSto	(E) Mtr Status	(P) Work
4616	12TH AV	0.75	150 1/2 EEPL of 46th @ SPL of 12th	NO METER	RETROFIT
4619	12TH AV	0.75	W.V. Loc: 4' WELL - 5' NSC in Box	NO METER	RETROFIT
4624	12TH AV	0.75	150' EEPL of 46th St, @ SPL of 12th Av, WLL back of sidewalk	NO METER	RETROFIT
4625	12TH AV	1.0	21' EWLL & 5' NNC	NO METER	RETROFIT
4632	12TH AV	0.75	50' EWLL & 1' Back of Sidewalk	NO METER	RETROFIT
4640	12TH AV	1.0	10 1/2' EWLL, 6' SSC of 12th	NO METER	RETROFIT
4641	12TH AV	1.0	6' WELL @ NPL of 12th	NO METER	RETROFIT
4648	12TH AV	0.75	1.1) 5' SSC on EPL in c/s box (5/30/06)□□1.2) 6' SSC - 1' WELL (5/30	NO METER	RETROFIT
4649	12TH AV	1.0	57' WWC of 47th @ NPL of 12th	NO METER	RETROFIT
4657	12TH AV	0.75	3' WELL @ NPL of 12th	NO METER	RETROFIT
4700	12TH AV	1.0	34' SSPL of 12th, 1' EEPL of 47th	NO METER	RETROFIT
3919	12TH AV 2			NO METER	RETROFIT
4220	13TH AV	1.0	167' EEPL of 42nd St, @ SPL of 13th Avenue	NO METER	RETROFIT
4221	13TH AV	1.0	12' WELL, 6' NNC	NO METER	RETROFIT
4228	13TH AV	1.0	10' WELL, @ SPL of 13th Avenue	NO METER	RETROFIT
4230	13TH AV	1.0	2' WELL, 6' SSC	NO METER	RETROFIT
4231	13TH AV	1.0	210' EEPL of 43rd, 11'WELL, 5'NNC of 13th Av. in c/s box	NO METER	RETROFIT
4240	13TH AV		14' WELL - 6' SSC 13th Avenue in Standpipe	NO METER	RETROFIT
4241	13TH AV	1.0	13' WELL, 5' NNC of 13th Avenue	NO METER	RETROFIT
4259	13TH AV	1.0	1) 16' EWLL - 7' NNC in box (8/24/06)□□2) 96' WWPL of 43rd, 17' EW	NO METER	RETROFIT
4268	13TH AV	1.0	12 1/2' WEPL of Lot, @ SPL of 13th Avenue	NO METER	RETROFIT
4300	13TH AV	1.0	43 1/2' EEPL of 43rd St, @ SPL of 13th Avenue	NO METER	RETROFIT
4321	13TH AV			NO METER	HYBRID
4400	13TH AV	1.0	19' EEPL of 44th Street, @ SPL of 13th Avenue	NO METER	RETROFIT
4401	13TH AV	0.75	19' EEPL of 44th Street, @ NPL of 13th Avenue	NO METER	RETROFIT
4409	13TH AV	0.75	5' WELL, NNC of 4409 13th Av in Standpipe	NO METER	RETROFIT
4417	13TH AV	0.75	99' EEPL of 44th Street, @ SPL of 13th Avenue	NO METER	RETROFIT
4425	13TH AV	0.75	4' WELL - 6' NNC in Standpipe	NO METER	RETROFIT
4500	13TH AV	0.75	1' WELL 2' Behind Sidewalk	NO METER	RETROFIT
4508	13TH AV	0.75	On WPL @ SPL of 13th Avenue	NO METER	RETROFIT
4516	13TH AV	1.0	24' EWLL, @ SPL of 13th Avenue	NO METER	RETROFIT
4517	13TH AV		29' WELL, 23' EWLL, 6" NNPL of 13th Avenue	NO METER	RETROFIT
4524	13TH AV	0.75	5' SSC 13th Avenue - 1' EWLL	NO METER	RETROFIT
4525	13TH AV	1.5	23'EWLL, 28'WELL, 5'NNC of 13th Ave in s/p	NO METER	RETROFIT
4533	13TH AV	0.75	250' EEPL of 45th Street, @ SPL of 13th Avenue	NO METER	RETROFIT
4534	13TH AV		5 1/2' WELL, 1' SSPL of 13th Avenue	NO METER	RETROFIT
4537	13TH AV	0.75	1) 27' WELL, 6' NNC in c/s box (11/17/05)□□2) 23' EWLL, 6' NNC of 1	NO METER	RETROFIT
4540	13TH AV	1.0	5' SSC & 2 1/2' EWLL in Standpipe	NO METER	RETROFIT
4541	13TH AV	0.75	114' WWPL of 46th Street, NPL of 13th Avenue	NO METER	RETROFIT

Oak Park (5M8)					
STREET_#	STREET_NAM	WS_TapSize	WS_CurbSto	(E) Mtr Status	(P) Work
4548	13TH AV	0.75	56' WWPL of 46th Street, @ NPL of 13th Avenue	NO METER	RETROFIT
4556	13TH AV	1.0	2' EWLL, @ SPL of 13th Avenue	NO METER	RETROFIT
4600	13TH AV	1.0	17' WELL, 1' Behind Sidewalk	NO METER	RETROFIT
4608	13TH AV	1.0	46' WELL, @ SPL of 13th Avenue	NO METER	RETROFIT
4609	13TH AV	1.0	29' WELL, 22' EWLL, 1 1/2' NNPL of 13th Avenue	NO METER	RETROFIT
4616	13TH AV		34 1/2' WELL, @ SPL of 13th Avenue	NO METER	RETROFIT
4617	13TH AV	0.75	1' NNPL of 13th Avenue, on WLL	NO METER	RETROFIT
4624	13TH AV	1.0	1' EELL, @ SPL of 13th Avenue	NO METER	RETROFIT
4625	13TH AV	0.75	6'NNC of 13th, 1'EWLL in c/s box	NO METER	RETROFIT
4632	13TH AV		20' EWLL, 5' SSC of 13th Avenue	NO METER	RETROFIT
4633	13TH AV	1.0	24' EWLL, 26' WELL, @ NPL of 13th Avenue	NO METER	RETROFIT
4637	13TH AV	0.75	6'NNC, 2'EWLL	NO METER	RETROFIT
4640	13TH AV		250' EEPL of 46th Street, @ SPL of 13th Avenue	NO METER	RETROFIT
4714	13TH AV		148' WWC of Stockton Blvd, @ NPL of 13th Avenue	NO METER	RETROFIT
3875	14TH AV	1.0	19' EWLL - 31' WELL & 2' NNPL of 14th Avenue	NO METER	RETROFIT
3879	14TH AV	1.0	48' EWLL - 2' EELL - 2' NNPL of 14th Avenue	NO METER	RETROFIT
3883	14TH AV	1.0	47' WELL & 0' WLL - 21' NNPL of 14th Avenue	NO METER	RETROFIT
3887	14TH AV	1.0	16' EWLL, NPL 14th Avenue & 39' WWC of 39th St.	NO METER	RETROFIT
3901	14TH AV	1.0	NPL of 14th Avenue	NO METER	RETROFIT
3909	14TH AV	1.0	15' NNC of 14th Avenue	NO METER	RETROFIT
3915	14TH AV	1.0	11' EWPL of Lot - 6 1/2' NNS / Walk of 14th Avenue	NO METER	RETROFIT
3921	14TH AV	1.0	156' EEC of 39th St - 5' EWLL	NO METER	RETROFIT
3939	14TH AV	1.0	103' La Solidad Way & 1' NNPL of 14th Avenue	NO METER	RETROFIT
3945	14TH AV	1.0	5' EWLL - 7' NNC of 14th Avenue	NO METER	RETROFIT
3951	14TH AV	1.0	16' EWLL & 33' WELL	NO METER	RETROFIT
3969	14TH AV	1.0	NPL of 14th Avenue	NO METER	RETROFIT
3975	14TH AV	1.0	NPL of Alley	NO METER	RETROFIT
4017	14TH AV	1.0	SPL of 14th Avenue	NO METER	RETROFIT
4025	14TH AV	1.0	49' WWC Sussetta Way, 18' N of Main at NPL 14th Avenue	NO METER	RETROFIT
4121	14TH AV	1.0	12' EWLL, 5' NNC of 14th Avenue	NO METER	RETROFIT
4129	14TH AV	1.0	42' EWLL, 3' WELL, 7' NNC 14th Avenue	NO METER	RETROFIT
4135	14TH AV	1.0	4' EWLL, 10' NNC of 14th Avenue	NO METER	RETROFIT
4157	14TH AV	1.0	7' EWLL, 7' NNC of 14th Ave in box	NO METER	RETROFIT
4165	14TH AV		15' EWLL, back of sidewalk	NO METER	RETROFIT
4211	14TH AV	1.0	NPL of 14th Avenue	NO METER	RETROFIT
4221	14TH AV	1.0	1) enters property at 29' WELL back of walk (12/16/05)□□2) NPL of 14	NO METER	RETROFIT
4223	14TH AV			NO METER	RETROFIT
4227	14TH AV	1.0	NPL of 14th Avenue	NO METER	RETROFIT
4255	14TH AV	1.0	NPL of 14th Avenue (NWPL ?) 7 1/2' EWPL of Lot	NO METER	RETROFIT

Oak Park (5M8)					
STREET_#	STREET_NAM	WS_TapSize	WS_CurbSto	(E) Mtr Status	(P) Work
4267	14TH AV	1.0	NPL of 14th Avenue	NO METER	RETROFIT
4269	14TH AV	1.0	NPL of 14th St. 28' EWLL in Meter Box	NO METER	RETROFIT
4301	14TH AV	1.0	16' NNC of 14th Avenue & 6' EEC of 43rd St.	NO METER	RETROFIT
4311	14TH AV	1.0	26' N of Main	NO METER	RETROFIT
4331	14TH AV			NO METER	RETROFIT
4501	14TH AV		6 1/2' EEPL of 45th St - 6' NNC of 14th Avenue	NO METER	RETROFIT
4509	14TH AV	1.0	2' EWLL & 1' NNC	NO METER	RETROFIT
4523	14TH AV	1.0	32' WELL - 18' EWLL - 1' 6" NNC of 14th Avenue	NO METER	RETROFIT
4533	14TH AV	1.0	1' WELL 2' NNC of 14th Avenue Standpipe	NO METER	RETROFIT
4545	14TH AV	1.0	1' WELL - 1' NNC 14th Avenue	NO METER	RETROFIT
4551	14TH AV	1.0	2' NNC 14th Avenue - on ELL	NO METER	RETROFIT
4557	14TH AV	1.0	On WLL & 18' NNC 14th Avenue	NO METER	RETROFIT
4601	14TH AV	1.0	1) 3/4" c/s: NOT EXPOSED□□ 1" c/s: WPL o/address - 3' SSC in box	NO METER	RETROFIT
4615	14TH AV	1.0	Back of North Curb	NO METER	RETROFIT
4617	14TH AV			NO METER	RETROFIT
4625	14TH AV	1.0	43' 6" WELL - 6' 6" EWLL - 1'6" NNCL 14th Avenue	NO METER	RETROFIT
4633	14TH AV	1.0	3' NNC of 14th Ave, 1' WELL in a box	NO METER	RETROFIT
4637	14TH AV	1.0	1'EWLL, 2'6" NNC in box	NO METER	RETROFIT
4641	14TH AV			NO METER	RETROFIT
4701	14TH AV	1.0	WV: 2'WELL, 1'NNC in s/p	NO METER	RETROFIT
4709	14TH AV			NO METER	RETROFIT
4719	14TH AV			NO METER	RETROFIT
4725	14TH AV			NO METER	RETROFIT
3024	39TH ST	1.0	4' SNLL - 36' NSLL- 1' WWC of 39th Street	NO METER	RETROFIT
3034	39TH ST	1.0	1) 1' NSLL, 1' WWC of 3034 39th St (08/12/05)□□2) Between Curb & S	NO METER	RETROFIT
3035	39TH ST	1.0	Bet, Curb & Sidewalk	NO METER	RETROFIT
3045	39TH ST	1.0	7' NSLL behind curb	NO METER	RETROFIT
3045	39TH ST			NO METER	RETROFIT
3100	39TH ST	1.0	15' NSLL & 45' SNLL & 3' WW Cb. of 39th Street	NO METER	RETROFIT
3109	39TH ST	1.0	1) 33' snll - 2' eec in m/box (6/21/07)□□2) on SPL & 5' EWC	NO METER	RETROFIT
3110	39TH ST		on sll - 1' eec (6/11/07)	NO METER	RETROFIT
3113	39TH ST	1.0	1' EEC of 39th Street in the park strip	NO METER	RETROFIT
3117	39TH ST	1.0	4' SNLL, 1' EEC of 39th Street	NO METER	RETROFIT
3123	39TH ST	1.0	91' 5" NNC of 7th Avenue - 2 SNLL 2' EEC of 39th Street	NO METER	RETROFIT
3719	39TH ST	1.0	EPL 39th Street	NO METER	RETROFIT
3720	39TH ST	1.0	25' SNLL, 1' WWPL of 39th Street	NO METER	RETROFIT
3726	39TH ST	1.0	WPL 39th Street	NO METER	RETROFIT
3727	39TH ST	1.0	EPL 39th Street	NO METER	RETROFIT
3733	39TH ST	1.0	EPL of 39th Street	NO METER	RETROFIT

Oak Park (5M8)					
STREET_#	STREET_NAM	WS_TapSize	WS_CurbSto	(E) Mtr Status	(P) Work
3734	39TH ST	1.0	SPL of 39th Street, 4 1/2' WWCb of 39th Street	NO METER	RETROFIT
3800	39TH ST	1.0	WPL 39th Street	NO METER	RETROFIT
3801	39TH ST	1.0	1' SNLL, 5'EEC in C/S box	NO METER	RETROFIT
3808	39TH ST	1.0	WPL 39th Street	NO METER	RETROFIT
3811	39TH ST	1.0	EPL of 39th Street	NO METER	RETROFIT
3816	39TH ST	1.0	On NLL - 5' WWC of 39th Street under driveway	NO METER	RETROFIT
3817	39TH ST	1.0	NPL of Lot	NO METER	RETROFIT
3824	39TH ST	1.0	PL	NO METER	RETROFIT
3829	39TH ST	1.0	EPL of 39th Street	NO METER	RETROFIT
3016	40TH ST	1.0	6' WWC of 40th Street - 15' SNLL	NO METER	RETROFIT
3026	40TH ST	1.0	3' SNLL - 35' NSLL - 6' WWC of 40th Street	NO METER	RETROFIT
3031	40TH ST	1.0	1) 19' NSLL, 5' EEC in c/s box (9/21/05)□□2) 24' SNLL, 5' EEC of 40th	NO METER	RETROFIT
3038	40TH ST	1.0	26' NSLL, 14' SNLL, 6' WWC	NO METER	RETROFIT
3040	40TH ST	1.0	12' NSLL or 29' SNLL, 6' WWC of 40th St in box	NO METER	RETROFIT
3102	40TH ST	1.0	1' WWPL of 40th Street	NO METER	RETROFIT
3114	40TH ST	1.0	27' SNLL or 13' NSLL, 6 1/2' WWC - 40th Street	NO METER	RETROFIT
3116	40TH ST	1.0	16 1/2' NSLL - 6' WWPL of 40th Street	NO METER	RETROFIT
3120	40TH ST	1.0	1) 7' WWC, 1' NNLL (4/22/06)□□2) 1" = 8' WWC - 1' NNLL	NO METER	RETROFIT
3160	40TH ST	1.0	WPL of 40th Street	NO METER	RETROFIT
3200	40TH ST	1.0	14 ' SNLL, 5' WWC of 40th Street in box.	NO METER	RETROFIT
3208	40TH ST	1.0	8' NSLL, 30' SNLL 7' WWC in Box	NO METER	RETROFIT
3210	40TH ST	1.0	3' SNLL and at WPL of 40th Street	NO METER	RETROFIT
3217	40TH ST	1.0	7' SNLL	NO METER	RETROFIT
3300	40TH ST	1.0	39' 6" SSPL of 8th Avenue, 1' WWPL - 40th Street	NO METER	RETROFIT
3306	40TH ST	1.0	W Property Line of 40th Street	NO METER	RETROFIT
3320	40TH ST	1.0	1' NSLL - Back of Sidewalk	NO METER	RETROFIT
3326	40TH ST	1.0	2' SNLL & 6' WWCb of 40th Street	NO METER	RETROFIT
3333	40TH ST	1.0	5' EEC & on NPL in Box	NO METER	RETROFIT
3334	40TH ST	1.0	WPL	NO METER	RETROFIT
3338	40TH ST	1.0	same as Corp and at WPL of 40th Street	NO METER	RETROFIT
3341	40TH ST	1.0	240' SSPL of 8th Avenue on 244' SS Curb of 8th Avenue, 14' N of S Lo	NO METER	RETROFIT
3348	40TH ST	1.5	266' SSPL of 8th Avenue, @ EPL	NO METER	RETROFIT
3401	40TH ST	1.0	same and 4' EEC of 40th Street	NO METER	RETROFIT
3406	40TH ST	1.0	4' SNLL, & 5' WWC of 40th Street	NO METER	RETROFIT
3412	40TH ST			NO METER	RETROFIT
3421	40TH ST	1.0	5' E of E Cb	NO METER	RETROFIT
3424	40TH ST	1.0	14' WELL - 46' EWLL - 6' NSPL in ROW	NO METER	RETROFIT
3426	40TH ST	1.0	1' SNLL, 6' WWC, in meter Box	NO METER	RETROFIT
3427	40TH ST	1.0	27' E of Main at EPL of 40th Street	NO METER	RETROFIT

Oak Park (5M8)					
STREET_#	STREET_NAM	WS_TapSize	WS_CurbSto	(E) Mtr Status	(P) Work
3430	40TH ST	1.0	5 ' 5" WWC 40th Street - 1' SNLL	NO METER	RETROFIT
3434	40TH ST	1.0	2' NSLL, 5' WWC in SP	NO METER	RETROFIT
3448	40TH ST	1.0	WPL	NO METER	RETROFIT
3500	40TH ST	1.0	2' NSLL & 1' WPL of 40th Street	NO METER	RETROFIT
3501	40TH ST	1.0	1) 7' EEC o/40th St - 3' NSLL in box (5/10/06)□□2) 39' SNLL - 3' NSLL	NO METER	RETROFIT
3508	40TH ST	1.0	1' SNPL, 7' WWC of 40th St	NO METER	RETROFIT
3511	40TH ST			NO METER	RETROFIT
3511	40TH ST	1.0	38' NSLL and 10' SNLL	NO METER	RETROFIT
3516	40TH ST	1.0	2' WEPL -on SLL, 5' NSLL - 6 1/2' WWC - in Box	NO METER	RETROFIT
3521	40TH ST	1.0	EPL	NO METER	RETROFIT
3531	40TH ST	1.0	1' NSLL, 7 1/2' EEC of 40th	NO METER	RETROFIT
3532	40TH ST	1.0	WPL	NO METER	RETROFIT
3541	40TH ST	1.0	same & 5' EEC 40th Street	NO METER	RETROFIT
3542	40TH ST	1.0	8' WWC, 3' SNLL in C/S Box	NO METER	RETROFIT
3600	40TH ST	1.0	25' SSC of 11th, 5 ' WWC of 40th	NO METER	RETROFIT
3604	40TH ST	1.0	7' WWC o/40th St - 4.5' NSLL	NO METER	RETROFIT
3616	40TH ST	1.0	1' NSLL, 39' SNLL, 1' WWPL of 40th Street	NO METER	RETROFIT
3630	40TH ST	1.0	3' NSLL o/address - 6' WWC o/40th St in SP (6/12/06)	NO METER	RETROFIT
3634	40TH ST	1.0	2' SNLL, 38' NSLL & 2' WWPL of 40th Street	NO METER	RETROFIT
3718	40TH ST	1.0	8' NSLL - 32' SNLL - 6' WWC 40th Street	NO METER	RETROFIT
3720	40TH ST	1.0	24' SNLL - 21' NSLL - 6' WWC of 40th Street	NO METER	RETROFIT
3724	40TH ST	0.75	12 1/2' NSLL - 1' behind sidewalk (in standpipe)	NO METER	RETROFIT
3750	40TH ST	0.75	1) 20' SNLL, 7' WWC in box (2/24/06)□□2) 20' SNLL, 6' WWC in box (	NO METER	RETROFIT
3758	40TH ST	1.0	24' SNLL - 5 ' WWC 40th in S/P	NO METER	RETROFIT
3759	40TH ST	1.0	9 1/2' NSLL - 28 1/2' SNLL, 1' EEPL of 40th Street	NO METER	RETROFIT
3800	40TH ST	1.0	1' NSLL at WPL 40th Street, 6' NSLL, 1' WWPL of 40th Street	NO METER	RETROFIT
3803	40TH ST	1.0	7' EEC of 40th Street - 4' NSLL	NO METER	RETROFIT
3808	40TH ST	1.0	171' NNPL of 14th Avenue, 8' NSPL of Lot, 4' 8" WW Curb of 40th Stre	NO METER	RETROFIT
3816	40TH ST	1.0	13 1/2' NSLL - 5' WWC of 40th Street	NO METER	RETROFIT
3817	40TH ST	1.0	1 1/2' NSLL, 1' behind sidewalk	NO METER	RETROFIT
3824	40TH ST			NO METER	RETROFIT
3840	40TH ST	0.75	6 1/2' WWC of 40th Street, on NLL of 40th Street	NO METER	RETROFIT
3300	41ST ST	1.0	SO is 96' SSPL of 8th Avenue, 1' WWCB of 41st Street	NO METER	RETROFIT
3301	41ST ST	1.0	62' SSC 8th Avenue, 9' EEC of 41st	NO METER	RETROFIT
3316	41ST ST	1.0	SPL of Lot, approx. 1' WWC of 41st Street	NO METER	RETROFIT
3317	41ST ST	1.0	13' NSLL - 9' EEC	NO METER	RETROFIT
3323	41ST ST	1.0	EPL of 41st Street	NO METER	RETROFIT
3324	41ST ST		No C/S	NO METER	RETROFIT
3331	41ST ST	1.0	3' SNLL, 7' EEC in c/s box	NO METER	RETROFIT

Oak Park (5M8)					
STREET_#	STREET_NAM	WS_TapSize	WS_CurbSto	(E) Mtr Status	(P) Work
3336	41ST ST	1.0	Same & 8' WWC 41st Street	NO METER	RETROFIT
3338	41ST ST	1.0	12' SNLL, 7' WWC in a c/s box	NO METER	RETROFIT
3339	41ST ST	1.0	1' NSLL, behind walk	NO METER	RETROFIT
3340	41ST ST	1.0	1' SNLL, 8' WWC of 41st	NO METER	RETROFIT
3342	41ST ST			NO METER	RETROFIT
3343	41ST ST	1.0	1' EE Curb 41st Street	NO METER	RETROFIT
3407	41ST ST	1.0	307' SSPL 8th Avenue, 1' WWC 41st Street	NO METER	RETROFIT
3415	41ST ST		1' SNLL, 1' EEC of 41st Street in a meter box	NO METER	RETROFIT
3416	41ST ST	1.0	23' SNLL, 7' WWC of 41st Street	NO METER	RETROFIT
3423	41ST ST			NO METER	RETROFIT
3424	41ST ST	1.0	37' WWC, 3' NNPL 21st Avenue	NO METER	RETROFIT
3433	41ST ST	1.0	SPL of 41st Street	NO METER	RETROFIT
3434	41ST ST	1.0	1' WW Curb of 41st Street	NO METER	RETROFIT
3440	41ST ST	1.0	1' WW Curb of 41st Street	NO METER	RETROFIT
3441	41ST ST	1.0	EPL of 41st Street	NO METER	RETROFIT
3500	41ST ST	1.0	EPL 41st Street	NO METER	RETROFIT
3509	41ST ST			NO METER	RETROFIT
3510	41ST ST	1.0	WPL of 41st Street	NO METER	RETROFIT
3519	41ST ST	1.0	NLL & 5' EEC of 41st Street	NO METER	RETROFIT
3520	41ST ST	1.0	WPL of 41st Street	NO METER	RETROFIT
3530	41ST ST	1.0	WPL of 41st Street	NO METER	RETROFIT
3531	41ST ST	1.0	EPL of 41st Street NLL	NO METER	RETROFIT
3540	41ST ST	1.0	WPL 41st Street	NO METER	RETROFIT
3548	41ST ST	1.0	5' WWC 41st, & 1' NNLL of 41st Street	NO METER	RETROFIT
3008	42ND ST	1.0	35'SSC of Broadway, 1'WWC of 42nd St in box.	NO METER	RETROFIT
3016	42ND ST	0.75	Back of E Curb of 42nd Street	NO METER	RETROFIT
3018	42ND ST	1.0	61' NNC of 6th Avenue, 2' WWC of 42nd Street	NO METER	RETROFIT
3024	42ND ST			NO METER	RETROFIT
3029	42ND ST			NO METER	RETROFIT
3029	42ND ST	1.0	21' SNLL behind Curb	NO METER	RETROFIT
3100	42ND ST	1.0	West Curb of 42nd Street	NO METER	RETROFIT
3101	42ND ST	1.0	Galv Pipe - 19' EEC of 42nd continues past 3029 42nd Street	NO METER	RETROFIT
3108	42ND ST	1.0	89' NNC of 7th Avenue, 3' WWC of 42nd Street	NO METER	RETROFIT
3115	42ND ST	1.0	Galv pipe 19' EEC of 42nd Street continues past 3029 42nd	NO METER	RETROFIT
3118	42ND ST	1.0	WPL of 42nd Street	NO METER	RETROFIT
3124	42ND ST	1.0	19' NNC of 7th Avenue - 2' WWC of 42nd Street	NO METER	RETROFIT
3125	42ND ST	0.75	9' NSLL & 1' EEC	NO METER	RETROFIT
3135	42ND ST	1.5	Galv pipe 3' SNLL - 18' EEC of 42nd in front yard of 3125 42nd Street	NO METER	RETROFIT
3143	42ND ST	1.0	Galv on the SLL or 35' SNLL in the park strip	NO METER	RETROFIT

Oak Park (5M8)					
STREET_#	STREET_NAM	WS_TapSize	WS_CurbSto	(E) Mtr Status	(P) Work
3200	42ND ST	1.0	1) 27' SSC 7TH AVE, 1' WWC 42ND ST. IN C/S BOX (6/3/06)□□2) 29	NO METER	RETROFIT
3205	42ND ST	1.0	48' NSLL, 1' EEC of 42nd Street	NO METER	RETROFIT
3210	42ND ST	0.75	17' SNLL & 2' WWC of 42nd Street	NO METER	RETROFIT
3211	42ND ST	1.0	16 1/2' NSLL, 22'SNLL, 1 1/2' EEC of 42nd Street	NO METER	RETROFIT
3231	42ND ST	1.0	17' NSLL - behind Curb	NO METER	RETROFIT
3240	42ND ST	0.75	1' EWLL - 5' SSC Santa Rosa	NO METER	RETROFIT
3241	42ND ST	1.0	179' NNC 8th Av - 1' EEC 42nd Street, 1' SSLL	NO METER	RETROFIT
3249	42ND ST	0.75	114' NNC of 8th Avenue, 15' NSPL of Lot - 2' EEC of 42nd Street	NO METER	RETROFIT
3301	42ND ST	1.0	20' NSLL- 1' EEC of 42nd St in box	NO METER	RETROFIT
3307	42ND ST			NO METER	RETROFIT
3310	42ND ST	1.0	West Curb of 42nd Street	NO METER	RETROFIT
3316	42ND ST	1.0	21 1/2' SNLL, 1' WWC of 42nd Street	NO METER	RETROFIT
3317	42ND ST	0.75	E Curb back of Curb 42nd Street	NO METER	RETROFIT
3325	42ND ST	1.0		NO METER	RETROFIT
3328	42ND ST	1.0	West Curb of 42nd Street	NO METER	RETROFIT
3334	42ND ST	1.0	West Curb of 42nd Street	NO METER	RETROFIT
3335	42ND ST	1.0	1' EEC - 1' NSLL	NO METER	RETROFIT
3340	42ND ST	1.0	11'6" SNLL - 23' 6" NSLL - 8' EWLL of 42nd Street	NO METER	RETROFIT
3341	42ND ST	1.0	1' NNLL & 1' EEC 42nd Street	NO METER	RETROFIT
3348	42ND ST	1.0	17' NSLL & 1' WWC of 42nd Street	NO METER	RETROFIT
3351	42ND ST	1.0	26' SNLL & 1' EEC of 42nd Street	NO METER	RETROFIT
3353	42ND ST	1.0	1) 1' eec - 1' snll in box/sp (6/26/07)□□2) 3' SNLL - 1' EEC in box (10/3	NO METER	RETROFIT
3400	42ND ST	1.0	SO 19' SNLL - 21' NSLL	NO METER	RETROFIT
3408	42ND ST	1.0	38' SNLL - 6' WWC of 42nd Street	NO METER	RETROFIT
3409	42ND ST	1.0	15' NSLL & 2' EEC of 3409 42nd Street	NO METER	RETROFIT
3417	42ND ST	1.0	1) 16' NSPL, 2' EEC in c/s box (9/12/05)□□2) 16' NSLL - Back of Curb	NO METER	RETROFIT
3424	42ND ST	1.0	West Curb of 42nd Street	NO METER	RETROFIT
3425	42ND ST	1.0	1) 15' NSLL of 3417 42nd St., 3' EEC in c/s box □□(9/16/05)□□2) Eas	NO METER	RETROFIT
3432	42ND ST	1.0	31' SNLL - 9' NSLL - 9' EWC	NO METER	RETROFIT
3433	42ND ST	1.0	On SLL - 1' EEC - 42nd Street in c/s Box, 25' SNLL	NO METER	RETROFIT
3440	42ND ST			NO METER	RETROFIT
3441	42ND ST		1' SNLL - 1' EEC in Box	NO METER	RETROFIT
3500	42ND ST	1.0	1" - 16'SNLL, 2'WWC of 42nd St in c/s box	NO METER	RETROFIT
3509	42ND ST	1.0	SLL & 1' EEC of 42nd Street	NO METER	RETROFIT
3515	42ND ST	1.0	13' NSLL - 31' WECL of 42nd Street	NO METER	RETROFIT
3524	42ND ST		14' NSLL & 2' WWC	NO METER	RETROFIT
3525	42ND ST	1.0	Shut off is NLL & EPL of 42nd Street	NO METER	RETROFIT
3533	42ND ST	1.0		NO METER	RETROFIT
3540	42ND ST	1.0	5' WWC - 1' NSPL	NO METER	RETROFIT

Oak Park (5M8)					
STREET_#	STREET_NAM	WS_TapSize	WS_CurbSto	(E) Mtr Status	(P) Work
3541	42ND ST	1.0	East Curb of 42nd Street	NO METER	RETROFIT
3548	42ND ST	1.0	8'WWC of 42nd St, 1'SNLL of 3548 42nd St in box	NO METER	RETROFIT
3549	42ND ST			NO METER	RETROFIT
3557	42ND ST			NO METER	RETROFIT
3708	42ND ST			NO METER	RETROFIT
3709	42ND ST	1.0	3' NSLL - 5' EEC of 42nd Street, 2' NNPL ?	NO METER	RETROFIT
3716	42ND ST	1.0	12'NSLL, 5'WWC of 42nd St	NO METER	RETROFIT
3717	42ND ST	1.0	6' EEC & 1' SNLL in C/S Box	NO METER	RETROFIT
3724	42ND ST	1.0	18' SSLL, 5' WWC	NO METER	RETROFIT
3725	42ND ST	1.0	SLL, 5' EEC of 42nd Street	NO METER	RETROFIT
3732	42ND ST	1.0	29' NSLL, 18' SNLL & 5' WWC of 42nd Street in standpipe	NO METER	RETROFIT
3733	42ND ST	1.0	6' NNC of 13th Avenue - 30' EEC of 42nd Street	NO METER	RETROFIT
3740	42ND ST	1.0	38' 6" NSLL - 10' 6" SNLL - 9' 6" EWPL of 42nd Street	NO METER	RETROFIT
3800	42ND ST	1.0	6' WWC of 42nd Street - 8' SNLL	NO METER	RETROFIT
3801	42ND ST	1.0	6' SSC 13th Avenue - 44' EEC 42nd Street	NO METER	RETROFIT
3804	42ND ST	1.0	WPL	NO METER	RETROFIT
3806	42ND ST	1.0	WPL	NO METER	RETROFIT
3808	42ND ST	1.0	6 1/2' WWC of 42nd Street & 11' NSLL	NO METER	RETROFIT
3809	42ND ST	1.0	5' EEC of 42nd Street - 11' SNLL in C/S Box	NO METER	RETROFIT
3817	42ND ST	1.0	1' NSLL - 4' Behind Sidewalk	NO METER	RETROFIT
3825	42ND ST	1.0	1) 5' eec on nll in m/box (12/21/06)□□2) EPL	NO METER	RETROFIT
3832	42ND ST	1.0	5'WWC of 42nd St, NLL in box	NO METER	RETROFIT
3836	42ND ST 2			NO METER	RETROFIT
3000	43RD ST	0.75	EPL	NO METER	RETROFIT
3025	43RD ST	0.75	5'EEC of 43rd St, 1'NSLL	NO METER	RETROFIT
3032	43RD ST		1) 1" c/s is 6'SNLL 5' WWC in c/s box(4/13/06)□□2) 6'SNLL, 5'WWC o	NO METER	RETROFIT
3033	43RD ST	0.75	WPL	NO METER	RETROFIT
3100	43RD ST	0.75	WPL	NO METER	RETROFIT
3101	43RD ST	1.0	27' SNLL, 1' Behind sidewalk	NO METER	RETROFIT
3109	43RD ST	0.75	2' 6" SNLL, 5' EEC of 43rd	NO METER	RETROFIT
3112	43RD ST	1.0	Same - 6' WWC 43rd Street	NO METER	RETROFIT
3116	43RD ST	1.0	6' WWC of 43rd Street	NO METER	RETROFIT
3117	43RD ST	0.75	1' NSLL - 6' EEC	NO METER	RETROFIT
3124	43RD ST	0.75	2 1/2' NNLL, behind sidewalk	NO METER	RETROFIT
3125	43RD ST	0.75	6' EEC, 1' NNLL	NO METER	RETROFIT
3132	43RD ST	0.75	1) 14' NSLL, 5' WWC in c/s box (11/10/05)□□2) 15' NSLL - 5' WWC in	NO METER	RETROFIT
3135	43RD ST			NO METER	RETROFIT
3135	43RD ST	0.75	EPL	NO METER	RETROFIT
3142	43RD ST			NO METER	RETROFIT

Oak Park (5M8)					
STREET_#	STREET_NAM	WS_TapSize	WS_CurbSto	(E) Mtr Status	(P) Work
3142	43RD ST	0.75	WPL	NO METER	RETROFIT
3200	43RD ST	0.75	WPL	NO METER	RETROFIT
3201	43RD ST	1.0	1.0": 1'SNLL, 6'EEC of 43rd St in c/s box	NO METER	RETROFIT
3209	43RD ST	1.0	7' EEC, 5' NSLL	NO METER	RETROFIT
3216	43RD ST	1.0	Same & 5' WWC 43rd Street	NO METER	RETROFIT
3217	43RD ST	0.75	3' SNLL - 5' EEC in Box	NO METER	RETROFIT
3224	43RD ST	1.0	20' SN Lot Line and 20' NS Lot Line	NO METER	RETROFIT
3225	43RD ST			NO METER	RETROFIT
3225	43RD ST	1.0	11' 7" NSLL & 4' 6" EEC	NO METER	RETROFIT
3232	43RD ST	1.0	147' NNC of 8th Avenue - 5' WWC of 43rd Street - 31' SNPL	NO METER	RETROFIT
3233	43RD ST	1.0	EPL 43rd Street	NO METER	RETROFIT
3240	43RD ST		6' WWC & 1' SNLL	NO METER	RETROFIT
3241	43RD ST	0.75	EPL	NO METER	RETROFIT
3262	43RD ST	1.0	47' 3" NNC - 8th Avenue - 7' WWC - 43rd Street	NO METER	RETROFIT
3325	43RD ST	0.75	1' NSLL - 1' E of Side walk	NO METER	RETROFIT
3332	43RD ST	0.75	1) 1' nnll - 2' wwc in c/s box (6/15/07)□□2) 2' SNLL - 2' WWC stand pip	NO METER	RETROFIT
3333	43RD ST	0.75	1' EEC - NLL in S/P	NO METER	RETROFIT
3340	43RD ST			NO METER	RETROFIT
3341	43RD ST	1.0	Same & 2' EEC 43rd Street	NO METER	RETROFIT
3348	43RD ST	1.0	8' SWLL 7' WWC	NO METER	RETROFIT
3400	43RD ST	0.75	Back W Cb, 43rd Street	NO METER	RETROFIT
3401	43RD ST	1.0	Same as corp and at E Curb of 43rd Street	NO METER	RETROFIT
3408	43RD ST	1.0	2' SNLL, 1' WWC of 43rd Street in c/s Box	NO METER	RETROFIT
3420	43RD ST	1.0	11'SNLL, 1'WWC in Box	NO METER	RETROFIT
3430	43RD ST	1.0	13' SNLL, 30' NSLL, 1' WWC of 43rd St in C/S box	NO METER	RETROFIT
3440	43RD ST	0.75	NLL - 1' WWC	NO METER	RETROFIT
3443	43RD ST	1.0	8' EEC, 6' NSLL	NO METER	RETROFIT
3501	43RD ST	0.75	WPL	NO METER	RETROFIT
3508	43RD ST	1.0	WPL back of sidewalk	NO METER	RETROFIT
3509	43RD ST	0.75	8' EEC & 4' SNLL	NO METER	RETROFIT
3512	43RD ST	1.0	280' NNPL of 11th Avenue, shut off back of sidewalk	NO METER	RETROFIT
3516	43RD ST	1.0	3 1/2' SSLL - 6' WWC of 43rd Street	NO METER	RETROFIT
3519	43RD ST	0.75	3' NSLL & 5' EEC of 43rd Street	NO METER	RETROFIT
3524	43RD ST	0.75	3 1/2' SNLL - 4 1/2' WWC of 43rd Street	NO METER	RETROFIT
3525	43RD ST	1.0	2' SNLL, 23' WEPL - 43rd Street	NO METER	RETROFIT
3532	43RD ST	1.0	39' SNLL - 1' NSLL & 16' EWPL 43rd Street	NO METER	RETROFIT
3533	43RD ST	0.75	5'EEC-3'NSLL of 3533 43rd St in box	NO METER	RETROFIT
3540	43RD ST	0.75	4 1/2' WWC of 43rd Street in stand pipe	NO METER	RETROFIT
3541	43RD ST	0.75	EPL	NO METER	RETROFIT

Oak Park (5M8)					
STREET_#	STREET_NAM	WS_TapSize	WS_CurbSto	(E) Mtr Status	(P) Work
3548	43RD ST	.75	6' WWC of 43rd Street & 1' NSLL	NO METER	RETROFIT
3549	43RD ST	1.0	EPL of Lot	NO METER	RETROFIT
3557	43RD ST	0.75	1' NSLL & 5' EECb of 43rd Street	NO METER	RETROFIT
3600	43RD ST	1.0	Same & 7' SSC 11th Avenue	NO METER	RETROFIT
3610	43RD ST	1.0	1) 2'WELL o/4251 12th Av - 6'NNC o/12th Av in box □□(8/14/06)□□2)	NO METER	RETROFIT
3615	43RD ST	1.0	6' SSC of 11th Av. 16' WEPL, 33' EEC of 43rd St in Box	NO METER	RETROFIT
3621	43RD ST	0.75	14 1/2' SNLL, 3' EWLL in c/s Box	NO METER	HYBRID
3631	43RD ST	1.0	4' W of Main	NO METER	HYBRID
3711	43RD ST	.75	1) 92' SSC, 3' WELL O/4312 12TH AVE. IN C/S BOX (2/3/07)□□2) 92'	NO METER	HYBRID
3716	43RD ST	1.0	16' WWC of 43rd - Street 5' SSC of 12th Avenue	NO METER	SERVICE
3721	43RD ST	1.0	1) 32' snll - 20' nsll - 7' wepl in box (12/22/06)□□2) 20'NSLL, 7'WEPL,	NO METER	HYBRID
3722	43RD ST	1.0	1' WWC of 43rd St-1' NNC of 13th Av. Service runs in □□front lawn of	NO METER	SERVICE
3731	43RD ST	1.0	22' NSLL, 5' WELL	NO METER	HYBRID
3741	43RD ST	1.0	17' SNPL - 7' WELL in box	METERED	HYBRID
3758	43RD ST	1.0	16' N of Main at NPL of 13th Avenue	NO METER	RETROFIT
3811	43RD ST	1.0	32' NSLL & 5' EEC (in standpipe)	NO METER	SERVICE
3832	43RD ST	1.5	1' WWPL of 43rd Street, SPL of 13th Avenue	NO METER	SERVICE
3008	44TH ST			NO METER	RETROFIT
3009	44TH ST	0.75	3/4' CC 41' S of South Curb 1' EEPL of 44th	NO METER	RETROFIT
3017	44TH ST	0.75	EPL	NO METER	RETROFIT
3018	44TH ST	1.0	5' WWC - 2' NSLL	NO METER	RETROFIT
3024	44TH ST		1' NNLL of 3016 4th Street, 5' WWC of 44th Street in 24" c/s Box	NO METER	RETROFIT
3027	44TH ST		1 1/2' SNLL - Back of Sidewalk	NO METER	RETROFIT
3032	44TH ST	1.0	Same & 6' WWC 44th Street	NO METER	RETROFIT
3033	44TH ST	0.75	EPL 44th Street	NO METER	RETROFIT
3040	44TH ST	1.0	38' NSLL,1'SNLL, 5' WWC in s/p	NO METER	RETROFIT
3043	44TH ST	0.75	On NPL, back of sidewalk	NO METER	RETROFIT
3048	44TH ST	0.75	6' WWC & 1' NSLL	NO METER	RETROFIT
3101	44TH ST	0.75	3/4 Valve 2' SNLL & 1' EEPL 44th Street	NO METER	RETROFIT
3108	44TH ST	0.75	16' WEC, 2' NSLL	NO METER	RETROFIT
3109	44TH ST	0.75	EPL	NO METER	RETROFIT
3116	44TH ST	0.75	1' SNLL - 5' WWC	NO METER	RETROFIT
3117	44TH ST	.75	1' SNLL- @ EPL of 44th Street in box	NO METER	RETROFIT
3124	44TH ST	0.75	3/4 Cs, 1 1/2' SSLL - 5' WWC	NO METER	RETROFIT
3125	44TH ST	0.75	3/4 Cs, 1' EEPL & 3' NSLL	NO METER	RETROFIT
3132	44TH ST		3/4' Cs, 3' SNLL & 7' WWC	NO METER	RETROFIT
3135	44TH ST	0.75	3/4 CS 1' EEPL & 2' NNPL	NO METER	RETROFIT
3142	44TH ST	0.75	3/4', 5' NNLL & 4' WWC of 44th	NO METER	RETROFIT
3200	44TH ST	0.75	WPL 44th Street	NO METER	RETROFIT

Oak Park (5M8)					
STREET_#	STREET_NAM	WS_TapSize	WS_CurbSto	(E) Mtr Status	(P) Work
3201	44TH ST	0.75	EPL	NO METER	RETROFIT
3209	44TH ST	1.0	10' NSLL 0f 3209 44th Street 5' EEC	NO METER	RETROFIT
3216	44TH ST	1.0	4' WWC, 2' NSLL in Box	NO METER	RETROFIT
3217	44TH ST	1.0	Same & 5' EEC 44th Street	NO METER	RETROFIT
3221	44TH ST	0.75		NO METER	RETROFIT
3222	44TH ST	1.0	2' W of WPL of 44th Street - 25' N of SLL - 15' S of NLL	NO METER	RETROFIT
3224	44TH ST	0.75	EPL	NO METER	RETROFIT
3233	44TH ST	0.75	4' NSLL, 5' EEC of 44th Street	NO METER	RETROFIT
3241	44TH ST	0.75	WPL	NO METER	RETROFIT
3249	44TH ST	1.0	1' SNLL - 4' EEC of 44th Street	NO METER	RETROFIT
3317	44TH ST	0.75	EPL	NO METER	RETROFIT
3321	44TH ST	1.0	Same as corp cock - 24' E of Main - at EPL 44th Street	NO METER	RETROFIT
3333	44TH ST	1.0	Same as corp cock - 24' E of Main - at EPL 44th Street	NO METER	RETROFIT
3336	44TH ST	1.0	Same as corp cock - 12' W of Main, 1' back of Curb	NO METER	RETROFIT
3338	44TH ST	0.75	2' NSLL, 2' WWC 44th Street in SP	NO METER	RETROFIT
3340	44TH ST	0.75	NLL - WPL of 44th Street	NO METER	RETROFIT
3341	44TH ST	1.0	4' NSLL, 5' EEC in c/s box	NO METER	RETROFIT
3346	44TH ST	0.75	WPL 44th Street	NO METER	RETROFIT
3400	44TH ST	0.75	2' WWC on NPL	NO METER	RETROFIT
3401	44TH ST	0.75	SLL, 5' EEC	NO METER	RETROFIT
3408	44TH ST	0.75	2' WEC - on SPL	NO METER	RETROFIT
3409	44TH ST	1.0	1' CS, 17' NSLL, 6' EEC of 44th	NO METER	RETROFIT
3416	44TH ST			NO METER	RETROFIT
3416	44TH ST	0.75	27' SNLL, 24' NSLL, 1' 6" WWC	NO METER	RETROFIT
3425	44TH ST	0.75	10' NSLL/5' EEC under wall	NO METER	RETROFIT
3437	44TH ST	1.0	26' NSLL, 6 EEC	NO METER	RETROFIT
3440	44TH ST	1.0	Same as corp and at W Curb of 44th Street	NO METER	RETROFIT
3500	44TH ST	1.0	Same & 1' WWC 44th Street	NO METER	RETROFIT
3510	44TH ST	1.0	15'SNLL, 3'WWC in S/P	NO METER	RETROFIT
3528	44TH ST	1.0	11' NSLL - behind Curb under concrete Driveway	NO METER	RETROFIT
3534	44TH ST	1.0	6' N of S Lot Line, 1' WW Curb of 44th Street	NO METER	RETROFIT
3540	44TH ST	0.75	NLL of 3540 44th Street 1' WWC of 44th Street in a box	NO METER	RETROFIT
3546	44TH ST	0.75	83' NNC of 11th Avenue, behind walk	NO METER	RETROFIT
3556	44TH ST	0.75	NLL & 16' WWC - 44th Street	NO METER	RETROFIT
3600	44TH ST	1.0		NO METER	RETROFIT
3610	44TH ST	1.0	6'EWPL-5'NSLL in c/s box	NO METER	HYBRID
3620	44TH ST	1.0	14 1/2' SNLL, 3' EWLL in c/s Box	NO METER	HYBRID
3621	44TH ST	1.0	2' WELL, 50' EE Curb 44th Street, 7' 6" NN Curb 12t h Avenue	NO METER	RETROFIT
3630	44TH ST	1.0	3' E of Main	NO METER	HYBRID

Oak Park (5M8)					
STREET_#	STREET_NAM	WS_TapSize	WS_CurbSto	(E) Mtr Status	(P) Work
3640	44TH ST	1.0	2 1/2' E of Main	NO METER	HYBRID
3720	44TH ST	0.75	3/4' - 14' NSLL, 1' EWLL	NO METER	HYBRID
3723	44TH ST	1.0	18' WEC & 15' SNLL of 3723 44th Street	NO METER	RETROFIT
3730	44TH ST	1.0	20' SNLL, 2' EWLL of 3730 44th Street	NO METER	HYBRID
3800	44TH ST	1.0	1) 1.5' EWPL, 4.5' SSC of 13th Ave. in c/s box (1/6/06)□□2) SPL, 13th	NO METER	RETROFIT
3810	44TH ST	0.75	12' NSPL & 6' WWC	NO METER	RETROFIT
3820	44TH ST	1.0	12'NSLL, 27' SNll, 5'WWC	NO METER	RETROFIT
3824	44TH ST	1.0	12' SNLL 5' EWC	NO METER	RETROFIT
3825	44TH ST	1	58' S of N Lot Line, and 2' N of S Lot Line	NO METER	HYBRID
3830	44TH ST	1.0	82' NNC of 14th Avenue and 9' SNLL	NO METER	RETROFIT
3835	44TH ST	1	Same as corp and 7' W of E Lot Line	NO METER	HYBRID
3845	44TH ST	1.0	1' CS is 24' SNLL & 29' NSLL 6' WEPL	NO METER	HYBRID
3324	45TH ST	1.0	3' NSLL- 6" WEPL- 4' SSC	NO METER	RETROFIT
3332	45TH ST	1.0	90' NNPL 9th Avenue - Back of Side walk	NO METER	RETROFIT
3340	45TH ST	1.0	Same - 1' WWPL 45th Street	NO METER	RETROFIT
3348	45TH ST	1.0	10' SNLL, 6' WWC	NO METER	RETROFIT
3400	45TH ST		7' SNPL - 7' WWC 45th Street	NO METER	RETROFIT
3410	45TH ST	1.0	5' WWC of 45th St, on NLL	NO METER	RETROFIT
3416	45TH ST	1.0	13' NSLL 45th St	NO METER	RETROFIT
3424	45TH ST	1.0	18' NSLL - 5' WWC 45th Street	NO METER	RETROFIT
3430	45TH ST	1.0	134' SSPL 9th Avenue, 8' EWC 45th Street	NO METER	RETROFIT
3446	45TH ST	1.0	8' E of W Curb of 45th Street	NO METER	RETROFIT
3800	45TH ST	1.0	6' SSC of 13th Ave, 5' WWC of 45th St in C/S Box	NO METER	SERVICE
3808	45TH ST	1.0	1) 4' WEC 45TH, 5' SSC 13TH AVE IN S/P (12/13/06)□□2) SPL of 13t	NO METER	SERVICE
3826	45TH ST	1	109' N of N Curb of 14th Avenue and 25' S of N Lot Line	NO METER	HYBRID
3836	45TH ST			NO METER	HYBRID
3846	45TH ST	1	52.6' N of N Curb of 14th Avenue and 22' S of N Lot Line	NO METER	HYBRID
3723	46TH ST	1.0	12' SNLL - 4' 6" EEC of 46th Street	NO METER	RETROFIT
3729	46TH ST			NO METER	RETROFIT
3730	46TH ST	1.0	1" Curb cock 14' N of SLL, back of sidewalk in stand pipe	NO METER	RETROFIT
3824	46TH ST	0.75	WPL of 46th Street	NO METER	RETROFIT
3708	47TH ST	0.75	WPL of 47th Street	NO METER	RETROFIT
3724	47TH ST	1.0	16' SSPL Alley - 5' WWC 47th Street	NO METER	RETROFIT
3725	47TH ST	1.0	11'SNLL - 5' EEC	NO METER	RETROFIT
3728	47TH ST	1.0	18' SNLL, 5' WWC in c/s box	NO METER	RETROFIT
3800	47TH ST	1.0	42' SSC of 13th Ave, 7'NSLL,6' WWC of 47th St in box	NO METER	RETROFIT
3810	47TH ST	1.0	EPL of 47th Street	NO METER	RETROFIT
3817	47TH ST	1.0	57' SSPL 13th Avenue -33' NSLL	NO METER	RETROFIT
3819	47TH ST	1.0	10' SNLL- 6' EEC of 47th Street	NO METER	RETROFIT

Oak Park (5M8)					
STREET_#	STREET_NAM	WS_TapSize	WS_CurbSto	(E) Mtr Status	(P) Work
3822	47TH ST	1.0	120' SSPL of 13th Avenue - 10' NSLL	NO METER	RETROFIT
3824	47TH ST	1.0	21' SSPL Alley - 6' WWC 47th Street (in Stand pipe)	NO METER	RETROFIT
3825	47TH ST	1.0		NO METER	RETROFIT
3006	BROADWAY			NO METER	RETROFIT
4006	BROADWAY	1.0	15' WWC of Santa Cruz - 7' SSC of 4008 Broadway	NO METER	RETROFIT
4020	BROADWAY		30' SNLL, 1' EEC of Santa Cruz	NO METER	RETROFIT
4030	BROADWAY	1.0	Moves back 6 to New PL of 11/17/37 6" S of SSPL Broadway	NO METER	RETROFIT
4100	BROADWAY	1.0	C/S 57' SSC of Broadway, 8' EEC of San Jose	NO METER	RETROFIT
4146	BROADWAY	1.0	34' EWLL, 6' SSC in standpipe	NO METER	RETRFOTI (2+)
3820	BROADWAY RD	1.0	5' NSPL of Alley - on WPL of Broadway	NO METER	RETROFIT
3030	LA SOLIDAD WY	1.0	20' NSLL - EPL of Alley	NO METER	RETRFIT (2)
3036	LA SOLIDAD WY		21' SNLL, 20' NSLL, 2' WEPL of Alley in s/p	NO METER	RETROFIT
3040	LA SOLIDAD WY	1.0	13' SNLL, on EPL of Alley in box	NO METER	RETROFIT
3106	LA SOLIDAD WY	1.0	EPL of Alley - 18' N of S lot line	NO METER	RETROFIT
3220	LA SOLIDAD WY	1.25	10' NSLL - 38' SNLL - 5 1/2' WWC of La Solidad	NO METER	RETROFIT
3718	LA SOLIDAD WY	1.0	WPL La Solidad	NO METER	RETROFIT
3719	LA SOLIDAD WY	1.0	EPL of La Solidad Way	NO METER	RETROFIT
3727	LA SOLIDAD WY			NO METER	RETROFIT
3735	LA SOLIDAD WY	1.0	5' EEC of La Solidad - 1' NSLL	NO METER	RETROFIT
3736	LA SOLIDAD WY	1.0	WPL of La Solidad Way	NO METER	RETROFIT
3766	LA SOLIDAD WY	1.0	1' NSLL Back of Walk in s/p	NO METER	RETROFIT
3800	LA SOLIDAD WY	1.0	WPL of La Solidad Way	NO METER	RETROFIT
3801	LA SOLIDAD WY	1.0	EPL of La Solidad Way	NO METER	RETROFIT
3808	LA SOLIDAD WY	1.0	2' NSLL - 1' WWPL of La Solidad	NO METER	RETROFIT
3809	LA SOLIDAD WY	1.0	1' NSLL, 5' EEC c/s in box	NO METER	RETROFIT
3816	LA SOLIDAD WY	1.0	6' WWC of St - 1' NSLL	NO METER	RETROFIT
3817	LA SOLIDAD WY	1.0	3' SNLL 10' EEC of La Solidad	NO METER	RETROFIT
3824	LA SOLIDAD WY		5' WWC of La Solidad & 2' SNLL	NO METER	RETROFIT
3829	LA SOLIDAD WY	1.0	on SPL, 5' EEC of La Solidad	NO METER	RETROFIT
3831	LA SOLIDAD WY		2' SNLL, 5' EEC of La Solidad Way in box	NO METER	RETROFIT
3832	LA SOLIDAD WY	1.0	1 1/2' SNLL & behind sidewalk in S/P	NO METER	RETROFIT
3700	LISSETTA AV	1.0	6' EWLL - 54' WWC Lissetta 8' SSC 12th Ave	NO METER	RETROFIT
3701	LISSETTA AV	1.0	34' EEC of Lissetta, 10' SSC of 12th Ave in Standpipe	NO METER	RETROFIT
3710	LISSETTA AV			NO METER	RETROFIT
3727	LISSETTA AV	1.0	WPL of Lissetta Avenue	NO METER	RETROFIT
3737	LISSETTA AV	1.0	EPL Lissetta Avenue	NO METER	RETROFIT
3738	LISSETTA AV	1.0	WPL Lissetta	NO METER	RETROFIT
3751	LISSETTA AV	1.0	EPL of Lissetta Avenue	NO METER	RETROFIT
3752	LISSETTA AV	1.0	SPL of Lot	NO METER	RETROFIT

Oak Park (5M8)					
STREET_#	STREET_NAM	WS_TapSize	WS_CurbSto	(E) Mtr Status	(P) Work
3763	LISSETTA AV	1.0	EPL of Lissetta Avenue	NO METER	RETROFIT
3767	LISSETTA AV	1.0	5' EWLL and at SPL of Lissetta Avenue, West	NO METER	RETROFIT
3800	LISSETTA AV	1.0	39' N of S Lot Line and 9' S of N Lot Line	NO METER	RETROFIT
3801	LISSETTA AV	1.0	19' NSLL, 5' EEC in box	NO METER	RETROFIT
3808	LISSETTA AV	1.0	WPL of Lissetta Ave	NO METER	RETROFIT
3809	LISSETTA AV		21 1/2' NSLL - 1' Behind Sidewalk (in Standpipe)	NO METER	RETROFIT
3816	LISSETTA AV	1.0	157' NNPL of 14th Avenue - WPL of Lexington Way	NO METER	RETROFIT
3817	LISSETTA AV	1.0	29' SNLL - Back of Sidewalk	NO METER	RETROFIT
3825	LISSETTA AV	1.0	14 1/2' NSLL, 1 1/2'behind sidewalk	NO METER	RETROFIT
0	MARTIN L KING BL			NO METER	RETROFIT
0	MARTIN L KING BL			NO METER	RETROFIT
3225	MARTIN L KING BL	1.0	11 1/2' SNLL - 1' EEPL of Sacramento Blvd	NO METER	RETROFIT
3333	MARTIN L KING BL			NO METER	RETROFIT
3401	MARTIN L KING BL	1.0	East Side Sacramento Blvd	NO METER	RETROFIT
3425	MARTIN L KING BL			NO METER	RETROFIT
3435	MARTIN L KING BL	1.0	61' WWC of Sacto Blvd - 2' NNC of 9th Avenue	NO METER	RETROFIT
3719	MARTIN L KING BL	0.75	WPL Sacramento Blvd	NO METER	RETROFIT
3727	MARTIN L KING BL	1.0	22' SNLL - 3' EEPL of Sacto Blvd	NO METER	RETROFIT
3735	MARTIN L KING BL	1.0	1 1/2' EEPL of Sacto Blvd - 1' NSLL	NO METER	RETROFIT
3801	MARTIN L KING BL	1.0	1) At NPL, 1' EEPL of Martin Luther King (1/14/07)□□2) NPL - 1' EEPL	NO METER	RETROFIT
3809	MARTIN L KING BL	1.0	14' NSLL - 2' EEPL of Sacto Blvd	NO METER	RETROFIT
3817	MARTIN L KING BL	1.0	14' SNLL - 2' Behind Walk, 6' EEC of Martin Luther King Blvd in Box	NO METER	RETROFIT
3829	MARTIN L KING BL	1.0	10' NSLL - 3' EEPL of Sacto Blvd	NO METER	RETROFIT
3839	MARTIN L KING BL	0.75		NO METER	RETROFIT
3317	MARTIN LUTHER KI			NO METER	RETROFIT
3425	MARTIN LUTHER KI			NO METER	RETROFIT
3425	MARTIN LUTHER KI			NO METER	RETROFIT
3525	MARTIN LUTHER KI	6	RHGV. 29' NSLL - 12' EWC of ML King	NO METER	RETROFIT 6"
3008	SAN CARLOS WY	1.0	WPL	NO METER	RETROFIT
3015	SAN CARLOS WY	1.0	6' EEC - on NPL in Standpipe	NO METER	RETROFIT
3025	SAN CARLOS WY	1.0	WV 13' SNLL - 5' EEC of San Carlos in Standpipe	NO METER	RETROFIT
3030	SAN CARLOS WY			NO METER	RETROFIT
3032	SAN CARLOS WY	1.0	2' SSLL, 5' WWC of San Carlos in box W/lid	NO METER	RETROFIT
3033	SAN CARLOS WY	1.0	EPL	NO METER	RETROFIT
3041	SAN CARLOS WY	1.0	6' EEC of San Carlos Way	NO METER	RETROFIT
3042	SAN CARLOS WY	1.0	2 1/2' SNLL, 4 1/2' WWC of San Carlos in Box W Lid	NO METER	RETROFIT
3100	SAN CARLOS WY	1.0	WPL	NO METER	RETROFIT
3107	SAN CARLOS WY	1.0	4' EEC of San Carlos - 4' NSLL of above	NO METER	RETROFIT
3108	SAN CARLOS WY	1.0	WPL	NO METER	RETROFIT

Oak Park (5M8)					
STREET_#	STREET_NAM	WS_TapSize	WS_CurbSto	(E) Mtr Status	(P) Work
3109	SAN CARLOS WY	1.0	16' NSLL - 5 1/2' EEC of San Carlos in S/P	NO METER	RETROFIT
3116	SAN CARLOS WY	1.0	1' NSLL - 5' WWC of San Carlos	NO METER	RETROFIT
3117	SAN CARLOS WY	1.0	12' SNLL, 43' NSLL, 2' EWPL	NO METER	RETROFIT
3125	SAN CARLOS WY	1.0	1' EEPL of San Carlos - on NLL	NO METER	RETROFIT
3130	SAN CARLOS WY	1.0	On NLL - WPL of San Carlos	NO METER	RETROFIT
3200	SAN CARLOS WY	1.0	Stop W Prop Line San Carlos Way	NO METER	RETROFIT
3201	SAN CARLOS WY	1.0	Same & 6' EEC San Carlos Way	NO METER	RETROFIT
3207	SAN CARLOS WY	1.0	6' EEC of San Carlos - SPL of Lot	NO METER	RETROFIT
3217	SAN CARLOS WY	1.0	1) 7' EEC, 3' SNLL in C/S box (09/19/05)□□3207: 7' EEC, 2' SNLL of 3	NO METER	RETROFIT
3304	SAN CARLOS WY	1.0	15' W of Main, 33' SNLL, 8' WWC in a c/s box	NO METER	METER
3323	SAN CARLOS WY	1.0	29' NSLL - 1' SNLL - 5' EEC	NO METER	METER
3336	SAN CARLOS WY	1.0	WPL of San Carlos	NO METER	METER
3338	SAN CARLOS WY	1.0	17' SNLL, 25' NSLL, 5' WWC in Box	NO METER	METER
3342	SAN CARLOS WY	1.0	WPL of San Carlos Way	NO METER	METER
3347	SAN CARLOS WY	1.0	1' NNPL, 6' EEC in S/P	NO METER	METER
3400	SAN CARLOS WY	1.0	15' NSLL - 5' WWC of San Carlos	NO METER	METER
3401	SAN CARLOS WY	1.0	At SLL	NO METER	METER
3409	SAN CARLOS WY	1.0	5' EEC of San Carlos - on NPL of Lot	NO METER	METER
3412	SAN CARLOS WY	1.0	23' SNLL - WPL of Carlos	NO METER	METER
3417	SAN CARLOS WY	1.0	24' SNLL, 5' EEC	NO METER	METER
3425	SAN CARLOS WY	1.0	EPL	NO METER	METER
3430	SAN CARLOS WY	1.0	21' NSLL - 5' WWC of St Under Sidewalk	NO METER	METER
3434	SAN CARLOS WY			NO METER	METER
3440	SAN CARLOS WY	1.0	14 1/2' SNLL - WPL of San Carlos	NO METER	METER
3441	SAN CARLOS WY	1.0	30' East of Main at EPL of San Carlos Way	NO METER	METER
3723	SAN CARLOS WY	1.0	NPL of Lot - EPL of San Carlos	NO METER	RETROFIT
3724	SAN CARLOS WY	1.0	WPL San Carlos	NO METER	RETROFIT
3726	SAN CARLOS WY	1.0	WPL San Carlos	NO METER	RETROFIT
3727	SAN CARLOS WY	1.0	EPL	NO METER	RETROFIT
3734	SAN CARLOS WY	1.0	on NLL - 5' WWC of San Carlos Wy	NO METER	RETROFIT
3735	SAN CARLOS WY	1.0	1' SNLL - 1' Behind Sidewalk	NO METER	RETROFIT
3800	SAN CARLOS WY	1.0	WPL San Carlos Way	NO METER	RETROFIT
3801	SAN CARLOS WY	1.0	SLL - Back of Curb	NO METER	RETROFIT
3808	SAN CARLOS WY	1.0	5' WWC, 1' SNLL in standpipe	NO METER	RETROFIT
3809	SAN CARLOS WY	1.0	6' EEC on NPL in s/p in driveway	NO METER	RETROFIT
3816	SAN CARLOS WY	1.0	WPL of San Carlos Way	NO METER	RETROFIT
3817	SAN CARLOS WY		5' EEC of San Carlos, 6' NSLL, in box	NO METER	RETROFIT
3824	SAN CARLOS WY	1.0	4 1/2' WWC of San Carlos - NLL	NO METER	RETROFIT
3825	SAN CARLOS WY	0.75	1' SNLL, 48' NSLL, 5' EEC in c/s box	NO METER	RETROFIT

Oak Park (5M8)					
STREET_#	STREET_NAM	WS_TapSize	WS_CurbSto	(E) Mtr Status	(P) Work
3832	SAN CARLOS WY	1.0	WPL of San Carlos Way	NO METER	RETROFIT
3847	SAN CARLOS WY	1.0	44' NNPL of 14th Ave, 5' EEC of San Carlos in C/S Box	NO METER	RETROFIT
3033	SAN DIEGO WY			NO METER	RETROFIT
3042	SAN DIEGO WY	1.0	WPL of San Diego - 14.5 S of N Lot Line	NO METER	RETROFIT
3046	SAN DIEGO WY	1.0	Same & 6' WWC San Diego	NO METER	RETROFIT
3050	SAN DIEGO WY	1.0	20' NSLL - 5' WWC of San Diego	NO METER	RETROFIT
3100	SAN DIEGO WY	1.0	WPL of San Diego Way	NO METER	RETROFIT
3101	SAN DIEGO WY	1.0	33' EEC of San Diego - Back of Walk	NO METER	RETROFIT
3108	SAN DIEGO WY	1.0	22'NSLL-6'WWC of san diego way in s/p	NO METER	RETROFIT
3124	SAN DIEGO WY	0.75	358' NNPL of 8th Ave 16' NNPL of 7th Ave	NO METER	RETROFIT
3131	SAN DIEGO WY	1.0	1' WELL - back of Sidewalk	NO METER	RETROFIT
3138	SAN DIEGO WY	1.0	4' SNLL - 6' WWC of San Diego in S/P	NO METER	RETROFIT
3200	SAN DIEGO WY	1.0	7' WWC of San Diego Wy, 20' SNLL in box	NO METER	RETROFIT
3208	SAN DIEGO WY	1.0	1) 2' NSLL, 6' WWC in box (11/10/05)□□2) 54' SSC of 7th Ave - 20 1/2	NO METER	RETROFIT
3216	SAN DIEGO WY	1.0	21 1/2' NSLL - Back of Sidewalk	NO METER	RETROFIT
3224	SAN DIEGO WY	1.0	19' SNLL - 24' NSLL - WPL of San Diego 5' WWC	NO METER	RETROFIT
3232	SAN DIEGO WY	1.0	1) 93' NNPL 8th Ave. on WPL San Diego (3/4/06)□□2) WPL San Dieg	NO METER	RETROFIT
3240	SAN DIEGO WY			NO METER	RETROFIT
3250	SAN DIEGO WY	1.0	24' SNLL, 6' WWC of San Diego	NO METER	RETROFIT
3006	SAN JOSE WY	1.0	32' SSC of Broadway - 5' WWC of San Jose	NO METER	RETROFIT
3012	SAN JOSE WY	1.0	1' NSLL - 5 1/2' WWC of San Jose	NO METER	RETROFIT
3024	SAN JOSE WY	0.75	WPL of San Jose Way	NO METER	RETROFIT
3032	SAN JOSE WY	1.0	WPL of San Jose Way	NO METER	RETROFIT
3035	SAN JOSE WY		15' NSLL - 6' EEC San Jose	NO METER	RETROFIT
3050	SAN JOSE WY		6' WWC of San Jose - 2' NNLL	NO METER	RETROFIT
3101	SAN JOSE WY	1.0	160' NNPL of 7th Avenue - 6' SNLL - Back of Sidewalk	NO METER	RETROFIT
3108	SAN JOSE WY	1.0	15' SNLL, 6' WWC	NO METER	RETROFIT
3110	SAN JOSE WY		5' WWC of San Jose at SLL	NO METER	RETROFIT
3122	SAN JOSE WY		1' SNLL, 1' WWC of San Jose in Standpipe	NO METER	RETROFIT
3124	SAN JOSE WY	1.0	7' SNLL, 1' WWC of San Jose	NO METER	RETROFIT
3200	SAN JOSE WY	1.0	8' SNLL - 6' WWC of San Jose	NO METER	RETROFIT
3201	SAN JOSE WY	1.0	5 1/2' EEPL of San Jose - Back of Walk	NO METER	RETROFIT
3207	SAN JOSE WY	1.0	8' EEC of San Jose Wy, 6' SNLL	NO METER	RETROFIT
3210	SAN JOSE WY	1.0	6' WWC of San Jose Wy on SPL in S/P	NO METER	RETROFIT
3217	SAN JOSE WY	1.0	NPL	NO METER	RETROFIT
3220	SAN JOSE WY	1.0	1' SNLL - 31' WWC of San Jose	NO METER	RETROFIT
3221	SAN JOSE WY	1.0	35' EEC of San Jose - 23' WELL - 6 1/2' NNC of Santa Rosa	NO METER	RETROFIT
3224	SAN JOSE WY	1.0	2' W of WPL - 9' N of SLL - 31' S of NLL	NO METER	RETROFIT
3231	SAN JOSE WY	1.0	32' SSC of Santa Rosa, 5' EEC or on EPL of San Jose Wy	NO METER	RETROFIT

Oak Park (5M8)					
STREET_#	STREET_NAM	WS_TapSize	WS_CurbSto	(E) Mtr Status	(P) Work
3240	SAN JOSE WY			NO METER	RETROFIT
3240	SAN JOSE WY	1.0	SLL - WPL of San Jose	NO METER	RETROFIT
3241	SAN JOSE WY	0.75	19' SNLL - 5' EEC in Standpipe	NO METER	RETROFIT
3250	SAN JOSE WY	0.75	5' SSLL, 4' EEC	NO METER	RETROFIT
3251	SAN JOSE WY	1.0	24' NN Cb of 8th Avenue & 36' SBKK & 7' WE Cb San Jose Way	NO METER	RETROFIT
3260	SAN JOSE WY	0.75	W/V - 4.5' SNLL, 4' WWC in standpipe	NO METER	RETROFIT
3301	SAN JOSE WY	1.0	19'WELL, 45'EEPL of San Jose Way, 51'EEC of□□San Jose, 5'SSC o	NO METER	RETROFIT
3318	SAN JOSE WY	1.0	WPL of San Jose Way	NO METER	RETROFIT
3319	SAN JOSE WY			NO METER	RETROFIT
3319	SAN JOSE WY	1.0	1' NSLL, 5' EEC of San Jose Wy	NO METER	RETROFIT
3328	SAN JOSE WY		NPL of Lot, 6' WWC of San Jose Wy, 1' SNLL in box	NO METER	RETROFIT
3338	SAN JOSE WY	1.0	WPL of San Jose Way	NO METER	RETROFIT
3347	SAN JOSE WY			NO METER	RETROFIT
3348	SAN JOSE WY	1.0	2 1/2' NSLL, Behind Sidewalk	NO METER	RETROFIT
3349	SAN JOSE WY	1.0	EPL of San Jose Way	NO METER	RETROFIT
3400	SAN JOSE WY	1.0	WPL of San Jose Way	NO METER	RETROFIT
3401	SAN JOSE WY	1.0	6' EWC, 1' NSLL in S/P	NO METER	RETROFIT
3410	SAN JOSE WY	1.0	WPL of San Jose Way	NO METER	RETROFIT
3411	SAN JOSE WY	1.0	7' EWC of San Jose on - SPL of Lot	NO METER	RETROFIT
3420	SAN JOSE WY	1.0	55' WWC of San Jose - 2' NSLL	NO METER	RETROFIT
3421	SAN JOSE WY	1.0	6' EEC of San Jose, 1' NSLL in S/P	NO METER	RETROFIT
3430	SAN JOSE WY	1.0	WPL of San Jose Way	NO METER	RETROFIT
3431	SAN JOSE WY	1.0	NLL - 1 1/2' Behind Sidewalk	NO METER	RETROFIT
3500	SAN JOSE WY	1.0	WPL of San Jose Way	NO METER	RETROFIT
3501	SAN JOSE WY	1.0	On SLL - 1' EWPL of Lot	NO METER	RETROFIT
3510	SAN JOSE WY	1.0	2' SNLL, 6' WWC in box	NO METER	RETROFIT
3511	SAN JOSE WY	1.0	1' SNLL, 1' EWPL in box	NO METER	RETROFIT
3520	SAN JOSE WY	1.0	7' WWC of San Jose - on SPL	NO METER	RETROFIT
3521	SAN JOSE WY	1.0	On SPL, Behind Sidewalk in box	NO METER	RETROFIT
3530	SAN JOSE WY	1.0	WPL of San Jose Way	NO METER	RETROFIT
3531	SAN JOSE WY	1.0	On NLL, Back of Walk	NO METER	RETROFIT
3025	SAN RAFAEL CT	1.0	On NPL oaf San Rafael 2' EEC of San Rafael	NO METER	RETROFIT
3037	SAN RAFAEL CT	1.0	3' N of S Lot line and 44' S of N Lot line	NO METER	RETROFIT
3101	SAN RAFAEL CT	1.0	EPL	NO METER	RETROFIT
3109	SAN RAFAEL CT	1.0	18' SNLL, 2' EEC	NO METER	RETROFIT
3118	SAN RAFAEL CT	1.0	9 1/2' WWC of San Rafael - 1' NSLL	NO METER	RETROFIT
3123	SAN RAFAEL CT	0.75	13' SNLL - 2' EEC of San Rafael	NO METER	RETROFIT
3016	SANTA CRUZ WY	1.0	Back of Curb	NO METER	RETROFIT
3017	SANTA CRUZ WY	1.0	6' EE Cb. Santa Cruz Way	NO METER	RETROFIT

Oak Park (5M8)					
STREET_#	STREET_NAM	WS_TapSize	WS_CurbSto	(E) Mtr Status	(P) Work
3025	SANTA CRUZ WY	1.0	NLL - 8' EEC of Santa Cruz	NO METER	RETROFIT
3030	SANTA CRUZ WY	1.0	EPL 40th Street	NO METER	RETROFIT
3032	SANTA CRUZ WY	1.0	1) 1' WWC - 12' SNLL marked in blue, new driveway □□(8/3/06)□□2)	NO METER	RETROFIT
3035	SANTA CRUZ WY	1.0	1 1/2' NSLL - 1 1/2' EEC of Santa Cruz	NO METER	RETROFIT
3100	SANTA CRUZ WY	1.0	16' SNLL - EPL of 40th Street	NO METER	RETROFIT
3105	SANTA CRUZ WY	1.0	1) 38' snll - 2' nsll - 8' eec in m/box (2/13/07)□□2) On NLL - 1' EEC of S	NO METER	RETROFIT
3110	SANTA CRUZ WY	0.75	0.5' W of EPL of 40th Street	NO METER	RETROFIT
3111	SANTA CRUZ WY	0.75	12 1/2' SNLL - 1' EEC of Santa Cruz	NO METER	RETROFIT
3118	SANTA CRUZ WY		19' NSLL - WLL	NO METER	RETROFIT
3121	SANTA CRUZ WY	1.0	8' NSLL, 7' EEC Santa Cruz Way in s/p	NO METER	RETROFIT
3123	SANTA CRUZ WY	1.0	1' NNLL, EEC of Santa Cruz Wy	NO METER	RETROFIT
3124	SANTA CRUZ WY	1.0	1) 11.5' NSLL, 2' WWC in c/s box (12/23/05)□□2) 1' W of W Curb of Sa	NO METER	RETROFIT
3125	SANTA CRUZ WY	1.0	13' SNLL 22' NSLL, 9' EEC of Santa Cruz in Standpipe	NO METER	RETROFIT
3126	SANTA CRUZ WY		6' SSPL of Lot - 3' WWC of Santa Cruz	NO METER	RETROFIT
3127	SANTA CRUZ WY	1.0	12' S of N Lot and 29' N of S Lot line	NO METER	RETROFIT
3142	SANTA CRUZ WY	1.0	27' NSLL, 13' SNLL, 2' WWC of Santa Cruz Way	NO METER	RETROFIT
3200	SANTA CRUZ WY	1.0	6' NSLL of 3200 Santa Cruz Way 2' WWC of Santa Cruz Way in box	NO METER	RETROFIT
3201	SANTA CRUZ WY	1.0	Back of E Cb. Santa Cruz Way	NO METER	RETROFIT
3208	SANTA CRUZ WY	0.75	29' SNLL - 11' NSLL - 1' WWC of Santa Cruz	NO METER	RETROFIT
3209	SANTA CRUZ WY	1.0	1) 9' SNLL, 2' EEC in c/s box (12/14/05)□□2) 9' SNLL, 2' EEC Santa C	NO METER	RETROFIT
3216	SANTA CRUZ WY	1.0	3' NSLL, 1' WWC in box	NO METER	RETROFIT
3224	SANTA CRUZ WY	1.0	Back of W Curb of Santa Cruz Way	NO METER	RETROFIT
3232	SANTA CRUZ WY	0.75	Wheel Valve 1' SNLL - 1' WWC of Santa Cruz Way in box	NO METER	RETROFIT
3241	SANTA CRUZ WY			NO METER	RETROFIT
3311	SANTA CRUZ WY	1.0	1' SNLL - 5' EEC of Santa Cruz	NO METER	RETROFIT
3340	SANTA CRUZ WY	1.0	6' WWC, 21' NSLL in Meter box	NO METER	RETROFIT
3349	SANTA CRUZ WY	1.0	3' NSLL - 4' EEC of Santa Cruz in SP	NO METER	RETROFIT
3357	SANTA CRUZ WY	1.0	1' SNLL - 1' EEPL of Santa Cruz	NO METER	RETROFIT
3400	SANTA CRUZ WY	1.0	WPL Santa Cruz Way	NO METER	RETROFIT
3401	SANTA CRUZ WY	1.0	EPL Santa Cruz Way	NO METER	RETROFIT
3409	SANTA CRUZ WY	1	NLL - 5' EEC Santa Cruz Way	NO METER	RETROFIT
3417	SANTA CRUZ WY	1.0	W/V: 6' EEC of Santa Cruz Wy, 1' NSLL in standpipe	NO METER	RETROFIT
3420	SANTA CRUZ WY	1.0	30' NSLL, 5' WWC of Santa Cruz Wy	NO METER	RETROFIT
3424	SANTA CRUZ WY	1.0	5' NSLL - 5' WWC of Santa Cruz in Meter Box	NO METER	RETROFIT
3425	SANTA CRUZ WY	1.0	1'NNLL, 5'EEC in box	NO METER	RETROFIT
3430	SANTA CRUZ WY	1.0	WPL Santa Cruz Way	NO METER	RETROFIT
3433	SANTA CRUZ WY	1.0	2' NSPL - 6' EEC of Santa Cruz	NO METER	RETROFIT
3440	SANTA CRUZ WY	1.0	4' NSLL, 6' WWC of Santa Cruz	NO METER	RETROFIT
3447	SANTA CRUZ WY	1.0	13' NSLL, 6' EEC of Santa Cruz in S/P	NO METER	RETROFIT

Oak Park (5M8)					
STREET_#	STREET_NAM	WS_TapSize	WS_CurbSto	(E) Mtr Status	(P) Work
3500	SANTA CRUZ WY	1.0	21' NSLL - 5' WWC of Santa Cruz in meter box	NO METER	RETROFIT
3501	SANTA CRUZ WY	1.0	6' NSLL - 6' EEC of Santa Cruz	NO METER	RETROFIT
3508	SANTA CRUZ WY	1.0	19' NSLL - 1' WWPL of Santa Cruz	NO METER	RETROFIT
3509	SANTA CRUZ WY	1.0	EPL Santa Cruz Way	NO METER	RETROFIT
3516	SANTA CRUZ WY	1.0	14' NSLL - WPL of Santa Cruz	NO METER	RETROFIT
3517	SANTA CRUZ WY	1.0	13' NSLL - 5' EEC of Santa Cruz	NO METER	RETROFIT
3524	SANTA CRUZ WY	1.0	1) 19' nsll - 6' wwc in box (7/25/07)□□2) 6' EEC, 13' SNLL in box (8/30	NO METER	RETROFIT
3525	SANTA CRUZ WY	0.75	12'SNLL, 5'EEC in c/s Box.	NO METER	RETROFIT
3531	SANTA CRUZ WY	0.75	EPL Santa Cruz Way	NO METER	RETROFIT
3554	SANTA CRUZ WY	1.0	Same - 1' WWC of Santa Cruz	NO METER	RETROFIT
4068	SANTA ROSA AV	0.75	2' EWLL & 6' SSC of Santa Rosa Avenue in Meter box	NO METER	RETROFIT
4116	SANTA ROSA AV	1.0	NPL	NO METER	RETROFIT
4124	SANTA ROSA AV	1.0	1) 1' EWLL, 6' SSC in Box (8/15/05)□□2) 1' EWLL, Back of Sidewalk	NO METER	RETROFIT
4127	SANTA ROSA AV	1.0	13' WELL, 29' EWLL, 5' SNC of Santa Rosa Avenue	NO METER	RETROFIT
4137	SANTA ROSA AV	1.0	5' NNC - 16' WELL	NO METER	RETROFIT
4149	SANTA ROSA AV		7 1/2' WELL, Back of Sidewalk	NO METER	METER & RETROFIT
4160	SANTA ROSA AV	1.0	10' WELL, 29'EWLL, Back of Sidewalk in S/P	NO METER	RETROFIT
3832	STOCKTON BL	1.0	128' NNC of 14th Ave, 3' WWL of Stockton	NO METER	RETROFIT

Colonia Heights (6M4)					
STREET_#	STREET_NAM	WS_TapSize	WS_CurbSto	(E) Mtr Status	(P) Work
0	14TH AV			NO METER	RETROFIT
5802	14TH AV	0.75	16.5' EWLL - 6.5' SSC o/14th Ave	NO METER	RETROFIT
5812	14TH AV			NO METER	RETROFIT
5818	14TH AV	1.0	2' WELL - SPL of 14th Avenue	NO METER	RETROFIT
5824	14TH AV	1.0	EPL 5820 14th Avenue	NO METER	RETROFIT
5836	14TH AV	1.0	39' EWLL - 4' SNPL 14th Avenue	NO METER	RETROFIT
5848	14TH AV	1.0	40' EWLL - 29' WELL - 1' 6" SSPL of 14th Avenue	NO METER	RETROFIT
5860	14TH AV	1.0	1) 45' ewll ROW in box (12/29/06)□□2) 39' EWLL, Back of Walk	NO METER	RETROFIT
5920	14TH AV	1.0	10' EWLL of 5920 14th Avenue 6' SSC of 14th Avenue	NO METER	RETROFIT
6100	14TH AV	1.0	60' NNC of 42nd Ave on WPL	NO METER	RETROFIT
6110	14TH AV	1.0	20' EWLL, 5' SSC 14th Avenue or 19' EWLL in S/P	NO METER	RETROFIT
6120	14TH AV	1.0	22' WELL, 6' SSC in standpipe	NO METER	RETROFIT
6200	14TH AV	1.0	Same - 5' EEC - 62nd Street	NO METER	RETROFIT
6212	14TH AV			NO METER	RETROFIT
6240	14TH AV	1.0	w/v= 60' WWC of 63rd St, 6' SSC of 14th Av in s/p	NO METER	RETROFIT
6300	14TH AV	1.0	8' WELL, 6' SSC Standpipe	NO METER	RETROFIT
6302	14TH AV	1.0	Same & 35' WEPL of Lot - 1' SSPL 14th Avenue	NO METER	RETROFIT
6372	14TH AV	1.25	33 1/2' EWLL of 6378 14th Avenue & 5' SSC of 14th Avenue	NO METER	RETROFIT
6386	14TH AV	1.25	37'WELL of 6384 & 6386 14th Ave , 6' SSC of 14th Ave in □□sp	NO METER	RETROFIT
6540	14TH AV	1.0	1' WWCb 65th ST. N & 8' SSCb of 14th Avenue	NO METER	RETROFIT
6600	14TH AV			NO METER	RETROFIT
6620	14TH AV	1.0	Same and at SPL of 14th Avenue	NO METER	RETROFIT
6640	14TH AV	1.0	Same and SPL of 14th Avenue	NO METER	RETROFIT
6648	14TH AV	1.0	Same as Corp at SPL 14th Avenue	NO METER	RETROFIT
6710	14TH AV	1.5	96' EEC & 6' SSC of 14th Street	NO METER	RETROFIT
6720	14TH AV			NO METER	RETROFIT
6764	14TH AV	1.0	1) 5' ewll - 8' snc in c/s box (01/05/07)□□2) 8' SSC - 14th Avenue - 5.5	NO METER	RETROFIT
6770	14TH AV	1.0		NO METER	RETROFIT
6830	14TH AV	1.0	Same and 24' S of Main Lot SPL 14th Avenue	NO METER	RETROFIT
6850	14TH AV	1.0	Same & at SPL 14th Avenue	NO METER	RETROFIT
6870	14TH AV	1.0	Same and 19' WELL, SPL of 14th Avenue	NO METER	RETROFIT
6900	14TH AV	1.0	88' 6 EEPL of 69th St & SSPL of 14th Avenue	NO METER	RETROFIT
6922	14TH AV	1.0	1) 6' EWLL, 8' SSC in c/s box (10/6/05)□□2) 7' EWLL, 8 1/2' SSC of 14	NO METER	RETROFIT
6930	14TH AV	1.0	Same and at SPL 14th Avenue	NO METER	RETROFIT
6938	14TH AV	1.0	Same and at SPL of 14th Avenue	NO METER	RETROFIT
6991	14TH AV		24-1/2 WELL - Behind Sidewalk	NO METER	RETROFIT
7001	14TH AV	1.0	11' EWLL - 4 1/2' Behind Sidewalk	NO METER	RETROFIT
7005	14TH AV			NO METER	RETROFIT
7009	14TH AV			NO METER	RETROFIT

Colonia Heights (6M4)					
STREET_#	STREET_NAM	WS_TapSize	WS_CurbSto	(E) Mtr Status	(P) Work
7010	14TH AV	1.0	7' WELL & 43' EWLL	NO METER	RETROFIT
7013	14TH AV	1.0	10'EWLL, 59'6" WELL, 9'NNC in c/s box	NO METER	RETROFIT
7015	14TH AV	1.0	36'WELL, 45'6" EWLL, 9'NNC of 14th Ave in s/p	NO METER	RETROFIT
7017	14TH AV	1.0	9'NNC of 14th Av, 36'WELL in S/P	NO METER	RETROFIT
7020	14TH AV	1.0	12' EWLL & 3' SSPL of 14th Avenue	NO METER	RETROFIT
7030	14TH AV	1.0	9' EWLL & 2' SSPL of 14th Avenue	NO METER	RETROFIT
7080	14TH AV	1.0	Same as above - 28' S of Main - at SPL 14th Avenue (91' WWC of 71s	NO METER	RETROFIT
7081	14TH AV	1.0	10' NNC, 16' WELL	NO METER	RETROFIT
7091	14TH AV	1.0	50' WELL, Back of Walk	NO METER	RETROFIT
7111	14TH AV	1.0	20' WELL - 9' NNC of 14th Avenue	NO METER	RETROFIT
7120	14TH AV	1.0	Same & Back of Sidewalk	NO METER	RETROFIT
7121	14TH AV	1.0	Same as Corp & at NPL of 14th Avenue	NO METER	RETROFIT
7130	14TH AV	1.0	108' WWC & 6' SSC 14th Avenue (33' WELL & Back of Walk)	NO METER	RETROFIT
7139	14TH AV	1.0	Same as Above	NO METER	RETROFIT
7230	14TH AV	1.0		NO METER	RETROFIT
7240	14TH AV	1.0	1) 31' WELL, 7' SSC 14th Ave. (11/17/05)□□2) Same & Back of Walk	NO METER	RETROFIT
7260	14TH AV	1.0	10' EWLL - 7' SSC of 14th Avenue	NO METER	RETROFIT
7308	14TH AV			NO METER	RETROFIT
7314	14TH AV			NO METER	RETROFIT
7475	14TH AV			NO METER	RETROFIT
7475	14TH AV	1.0	97' EWLL, 3' WELL, 1' NNPL of 14th Avenue	NO METER	RETROFIT
7550	14TH AV			NO METER	RETROFIT
7612	14TH AV	1.0	208' EWLL - 11' SSC 14th Avenue	NO METER	RETROFIT
7660	14TH AV	1.0	29' WWC of 77th Street, 6' NNC of 17th in Standpipe	NO METER	RETROFIT
7700	14TH AV	1.0	34' WWC of West Railroad Avenue - 5' SSC of 14th Avenue	NO METER	RETROFIT
7840	14TH AV			NO METER	RETROFIT
7840	14TH AV			NO METER	RETROFIT
7850	14TH AV	1.5	11' WWC Abbey Road - 12' SSC 14th Avenue	NO METER	RETROFIT
7942	14TH AV			NO METER	RETROFIT
8000	14TH AV	1.5	Same & 6' SSC 14th Avenue	NO METER	RETROFIT
0	15TH AV			NO METER	RETROFIT
5808	15TH AV	0.75	25' WELL, 5' SSC of 15th Avenue	NO METER	RETROFIT
5815	15TH AV			NO METER	RETROFIT
5816	15TH AV	0.75	1' SSPL of 15th Avenue	NO METER	RETROFIT
5823	15TH AV	0.75	NPL of 15th Avenue	NO METER	RETROFIT
5824	15TH AV	0.75	On SPL of 15th Avenue	NO METER	RETROFIT
5832	15TH AV	0.75	1' NSPL of 15th Avenue	NO METER	RETROFIT
5840	15TH AV	0.75	1' NSPL of 15th Avenue	NO METER	RETROFIT
5841	15TH AV	0.75	37' EWLL, 3 1/2' NNC in box	NO METER	RETROFIT

Colonia Heights (6M4)					
STREET_#	STREET_NAM	WS_TapSize	WS_CurbSto	(E) Mtr Status	(P) Work
5843	15TH AV	1,1	2' WWPL, 5' NNC in box	NO METER	RETROFIT & ABANDONMENT
5848	15TH AV	0.75	23' EWLL	NO METER	RETROFIT
5901	15TH AV	0.75	EPL - 9' WELL	NO METER	RETROFIT
5904	15TH AV	1.0	14' WELL, 5' SSC of 15th Avenue	NO METER	RETROFIT & ABANDONMENT
5930	15TH AV	0.75	On S Prop Line of 15th Avenue	NO METER	RETROFIT
5939	15TH AV			NO METER	RETROFIT
5939	15TH AV	0.75	On N Pro Line of 15th Avenue	NO METER	RETROFIT
5940	15TH AV			NO METER	RETROFIT
5941	15TH AV	0.75	20 1/2' WELL, 3' Behind Sidewalk	NO METER	RETROFIT
5951	15TH AV	0.75	Same , NPL of 15th Avenue	NO METER	RETROFIT
5960	15TH AV	0.75	Same, on SPL of 15th Avenue 5' SSC	NO METER	RETROFIT
5961	15TH AV	0.75	Same, and on NPL of 15th Avenue	NO METER	RETROFIT
5970	15TH AV	1.5	27' EWLL, Back of Walk	NO METER	RETROFIT
6050	15TH AV	1.0	15' EWLL of 6050 15th Av, 6' SSC of 60th St	NO METER	RETROFIT
6060	15TH AV	1.0	22' WELL & 13' NSC of 15th Avenue	NO METER	RETROFIT
6061	15TH AV	1.0	25' EWLL & 5' NNC of 15th Avenue	NO METER	RETROFIT
6100	15TH AV	1.0	19' EWLL & 13' NSC of 15th Avenue	NO METER	RETROFIT
6101	15TH AV	1.0	12' WELL, 5' NNC in box	NO METER	RETROFIT
6110	15TH AV	1.0	11' EWLL, 5' SSC in box	NO METER	RETROFIT
6111	15TH AV	1.0	24' EWLL & 5' NNC of 15th Avenue	NO METER	RETROFIT
6120	15TH AV	1.0	20' WELL & 5' SSC of 15th Avenue	NO METER	RETROFIT
6121	15TH AV	1.0	5' WELL & 5' NNC of 15th Avenue	NO METER	RETROFIT
6130	15TH AV	1.0	10' NSLL, 6' WWC in S/P	NO METER	RETROFIT
6131	15TH AV	1.0	39' WWC of 62nd St, 6' NNC of 15th Av in standpipe	NO METER	RETROFIT
6001	16TH AV	1.0	Same & 5' NNC 16th Avenue	NO METER	RETROFIT
6010	16TH AV	1.0	11' EWLL - 7' SSC 16th Avenue in c/s box	NO METER	RETROFIT
6011	16TH AV	1.0	5 1/2' NNC 16th Avenue - 30' WELL	NO METER	RETROFIT
6021	16TH AV	1.0	Same & 5' NNC 16th Avenue in C/S Box	NO METER	RETROFIT
6031	16TH AV	1.0	Same & 5' NNC 16th Avenue	NO METER	RETROFIT
6041	16TH AV	1.0	7' WELL, 6'NNC in c/s box	NO METER	RETROFIT
6050	16TH AV	1.0	1) 16' EWLL, 5' SNC in box (3/18/06)□□2) Same & 5' SSC 16th Avenu	NO METER	RETROFIT
6051	16TH AV	1.0	14' WELL - 1' NNPL 16th Avenue	NO METER	RETROFIT
6061	16TH AV	1.0	20' EWLL - 5'NNC in box	NO METER	RETROFIT
6071	16TH AV	1.0	1) 14' WELL - 5' NNC in c/s box (11/21/06)□□2) Same & 5' NNC 16th A	NO METER	RETROFIT
6100	16TH AV	1.0	Same & 6' SSC 16th Avenue	NO METER	RETROFIT

Colonia Heights (6M4)					
STREET_#	STREET_NAM	WS_TapSize	WS_CurbSto	(E) Mtr Status	(P) Work
6101	16TH AV	1.0	Same & 5' NNC 16th Avenue	NO METER	RETROFIT
6111	16TH AV	1.0	1) 1" c/s is 31' EWLL, 1' NNC in meter box(5/28/06)□□2) Same & 5' NI	NO METER	RETROFIT
6120	16TH AV	1.0	Same & 5' SSC 16th Avenue	NO METER	RETROFIT
6121	16TH AV	1.0	Same 5' NNC 16th Avenue	NO METER	RETROFIT
0	17TH AV			NO METER	RETROFIT
5800	17TH AV	1.0	SPL 17th Avenue	NO METER	RETROFIT
5801	17TH AV	1.0	NPL 17th Avenue	NO METER	RETROFIT
5840	17TH AV	1.0	SPL 17th Avenue	NO METER	RETROFIT
5841	17TH AV	1.0	NPL 17th Avenue	NO METER	RETROFIT
5860	17TH AV	1.0	37' WELL - 4' Behind Sidewalk	NO METER	RETROFIT
5861	17TH AV	1.0	1) 38' WELL & 8' NNC IN S/P (6/10/07)□□2) NPL 17th Avenue	NO METER	RETROFIT
5870	17TH AV	1.0	SPL 17th Avenue	NO METER	RETROFIT
5871	17TH AV	1.0	30' WELL, 9' NNC in standpipe	NO METER	RETROFIT
5880	17TH AV	1.0	28' WELL - 8' SSC 17th Avenue	NO METER	RETROFIT
5881	17TH AV	1.0	NPL of 17th Avenue	NO METER	RETROFIT
5900	17TH AV	1.0	25' WELL - 7' SSC 17th Avenue, in C/S Box	NO METER	RETROFIT
5901	17TH AV	1.0	30 1/2' WELL - 9' NNC 17th Avenue	NO METER	RETROFIT
5910	17TH AV	1.0	SPL 17th Avenue	NO METER	RETROFIT
5911	17TH AV	1.0	NPL 17th Avenue	NO METER	RETROFIT
5920	17TH AV	1.0	SPL 17th Avenue	NO METER	RETROFIT
5921	17TH AV	1.0	22' WELL, 7' NNC of 17th Avenue Under tree in Box	NO METER	RETROFIT
5940	17TH AV	1.0	SPL 17th Avenue	NO METER	RETROFIT
5941	17TH AV			NO METER	RETROFIT
5960	17TH AV	1.0	SPL 17th Avenue	NO METER	RETROFIT
5970	17TH AV	1.0	SPL 17th Avenue	NO METER	RETROFIT
5976	17TH AV	1.0	31' EWLL, 7' SSC in c/s box	NO METER	RETROFIT
5980	17TH AV		18' SNPL, 5' WWC	NO METER	RETROFIT
5981	17TH AV			NO METER	RETROFIT
7301	17TH AV	1.0	44' EEC 73rd Street - 6' NNC 17th Avenue	NO METER	RETROFIT
7309	17TH AV	1.0	Same & 6' NNC	NO METER	RETROFIT
7312	17TH AV	1.0	40' SNLL -30' NSLL- 6' E of main - 2' EWLL	NO METER	RETROFIT
7330	17TH AV	1.0		NO METER	RETROFIT
7400	17TH AV			NO METER	RETROFIT
7400	17TH AV			NO METER	RETROFIT
7417	17TH AV	1.0	3' WELL - 6' NNC 17th Avenue	NO METER	RETROFIT
7424	17TH AV	1.0	Same & 6' NN 17th Avenue	NO METER	RETROFIT
7432	17TH AV		Same & 6' SSC 17th Avenue	NO METER	RETROFIT
7435	17TH AV	1.0	Same & 6' NNC 17th Avenue	NO METER	RETROFIT
7505	17TH AV	1.0	8' WELL - 7' NNC of 17th Avenue	NO METER	RETROFIT

Colonia Heights (6M4)					
STREET_#	STREET_NAM	WS_TapSize	WS_CurbSto	(E) Mtr Status	(P) Work
7507	17TH AV			NO METER	RETROFIT
7512	17TH AV	1.0	13' EWLL - 6' SSC	NO METER	RETROFIT
7516	17TH AV	1.0	1) 8' ssc - 13' well (3/29/07)□□2) Same & 7' SSC 17th Avenue	NO METER	RETROFIT
7607	17TH AV			NO METER	RETROFIT
7650	17TH AV	1.0	13' EWLL - 37' WELL - 1' SSPL 17th Avenue	NO METER	RETROFIT
7656	17TH AV	1.0	49' SNPL, 62'NSPL, 6'WWC of 77th St.	NO METER	RETROFIT
7800	17TH AV	1.0	1) 28' EWLL - 8' SSC in box (05/08/06)□□2) 29' EWLL, 8' SSC in box(	NO METER	RETROFIT
7820	17TH AV	1.5	WV=26'SNLL,76'NSLL of 4241 77th St., 5'EEC 77th □□Street	NO METER	RETROFIT
7317	17TH AV A	1.0	1) 6' NNC o/17th - 7' WELL (8/29/06)□□2) 6' WELL - 7' NNC	NO METER	RETROFIT
0	18TH AV			NO METER	RETROFIT
5800	18TH AV	1.0	66' EEC of 58th St - 9' SSC of 18th Avenue in S/P	NO METER	RETROFIT
5801	18TH AV			NO METER	RETROFIT
5815	18TH AV	1.0	At Property Line of 18th Avenue	NO METER	RETROFIT
5820	18TH AV	1.0	40' EWLL, 11' SSC 4 1/2' Deep	NO METER	RETROFIT
5821	18TH AV	1.0	22' WELL - Back of Sidewalk	NO METER	RETROFIT
5830	18TH AV	1.0	Property Line of 18th Avenue	NO METER	RETROFIT
5831	18TH AV	1.0	27 1/2' EWLL & 8' NNC 18th Avenue	NO METER	RETROFIT
5840	18TH AV	1.0	21'WELL, 29'EWLL, 8'SSC 18th Ave in box	NO METER	RETROFIT
5841	18TH AV	1.0	9' NNC, 27' EWLL in s/p	NO METER	RETROFIT
5850	18TH AV	1.0	18' WELL, 7' SSC of 18th Avenue	NO METER	RETROFIT
5851	18TH AV	1.0	28' EWLL - 8' NNC 18th Avenue	NO METER	RETROFIT
5860	18TH AV	1.0	Property Line of 18th Avenue	NO METER	RETROFIT
5861	18TH AV	1.0	At Property Line of 18th Avenue,	NO METER	RETROFIT
5900	18TH AV	1.0	Property Line of 18th Avenue	NO METER	RETROFIT
5901	18TH AV	1.0	At Property Line of 18th Avenue	NO METER	RETROFIT
5910	18TH AV	1.0	Property Line of 18th Avenue	NO METER	RETROFIT
5915	18TH AV	1.0	28' EWLL, 7' NNC of 18th Avenue in C/S Box	NO METER	RETROFIT
5920	18TH AV	1.0	Property Line of 18th Avenue	NO METER	RETROFIT
5921	18TH AV	1.0	27 1/2' EWLL, Back of Sidewalk	NO METER	RETROFIT
5930	18TH AV	1.0	Property Line of 18th Avenue.	NO METER	RETROFIT
5931	18TH AV	1.0		NO METER	RETROFIT
5940	18TH AV	1.0	Property Line of 18th Avenue	NO METER	RETROFIT
5941	18TH AV	1.0	Property Line of 18th Avenue	NO METER	RETROFIT
5950	18TH AV	1.0	Property Line of 18th Avenue	NO METER	RETROFIT
5951	18TH AV	1.0	22' WEPL of Lot & NPL 18th Avenue	NO METER	RETROFIT
5960	18TH AV	1.0	Property Line of 18th Avenue	NO METER	RETROFIT
5961	18TH AV	1.0	At Property Line of 18th Avenue.	NO METER	RETROFIT
5970	18TH AV	1.0	Property Line of 18th Avenue	NO METER	RETROFIT
5971	18TH AV	1.0	At property Line of 18th Avenue	NO METER	RETROFIT

Colonia Heights (6M4)					
STREET_#	STREET_NAM	WS_TapSize	WS_CurbSto	(E) Mtr Status	(P) Work
6311	18TH AV	1.0	Same - 7' NNC 18th Avenue	NO METER	RETROFIT
6330	18TH AV	1.0	23' N of Main - at NPL 18th Avenue	NO METER	RETROFIT
6331	18TH AV			NO METER	RETROFIT
6350	18TH AV	1.0	230'EEPL 63rd St, 27'WELL, 7'SSC in box	NO METER	RETROFIT
6351	18TH AV	1.0	12' N of Main at NPL of 18th Avenue	NO METER	RETROFIT
6390	18TH AV	1.0	Same as Corp Cock - 41' WELL, SPL of 18th Avenue	NO METER	RETROFIT
6391	18TH AV	1.0	1) 24.5' WELL, 5.5' NNC of 18th Ave. in c/s box □□(2/13/06)□□2) Sam	NO METER	RETROFIT
6400	18TH AV	1.0	48' WELL - 10' SSC of 18th Ave in S/P	NO METER	RETROFIT
6401	18TH AV	1.0	2' 6" WELL - 56' 6" EWLL - 1' NNPL of 18th Avenue	NO METER	RETROFIT
6411	18TH AV	1.0	On NPL of 18th Avenue - 5' E of WLL - 35' W of ELL	NO METER	RETROFIT
6425	18TH AV	1.0	34' EWLL & 16' WELL & 8' SN Cb. of 18th Avenue	NO METER	RETROFIT
6450	18TH AV	1.0	30' EWLL - 8' SSC	NO METER	RETROFIT
6454	18TH AV		22' WELL - 6454 18th Avenue - 9' SSC 18th Avenue	NO METER	RETROFIT
6460	18TH AV	1.0	8.5' N C/L 18th Avenue - 230' W C/L 65th St.	NO METER	RETROFIT
6462	18TH AV	1.0	Same as Corp Corp - at SPL 18th Avenue	NO METER	RETROFIT
6504	18TH AV	1.0	Same as Corp Cock - 33' E of Main - at EPL 65th St.	NO METER	RETROFIT
6505	18TH AV	1.0	49' WELL, 26' EWLL, 1' NNPL 18th Avenue	NO METER	RETROFIT
6508	18TH AV	1.0	26' EWLL - 7' SSC	NO METER	RETROFIT
6509	18TH AV	1.0	195' EEPL 65th and on NPL 18th Avenue, & 14' EWLL	NO METER	RETROFIT
6512	18TH AV	1.0	Same as Corp Cock - at SPL 18th Avenue	NO METER	RETROFIT
6516	18TH AV	1.0	Same as Corp Cock - at SPL 18th Avenue	NO METER	RETROFIT
6643	18TH AV	1.0	Same as Corp Cock - 13' N of Main - at NPL 18th Avenue	NO METER	RETROFIT
6644	18TH AV	1.0	Same as Corp Cock - 28' S of Main at SPL 18th Avenue	NO METER	RETROFIT
6646	18TH AV	1.0	Same and 1' SSPL of 18th Avenue	NO METER	RETROFIT
6647	18TH AV	1.0	4' WELL - 5' NNC 18th Avenue	NO METER	RETROFIT
6650	18TH AV	1.0	7' EWLL - 6' SSC of 18th Avenue	NO METER	RETROFIT
6651	18TH AV		36' WWC 67th St, 4' NNC 18th Avenue	NO METER	RETROFIT
6700	18TH AV	1.0	68' SSC 18th Avenue - 12' EEC 67th Street	NO METER	RETROFIT
6720	18TH AV	1.0	28' S of Main at SPL of 18th Avenue	NO METER	RETROFIT
6730	18TH AV	1.0	28 1/2' WELL - 1' Behind Sidewalk 6730 18th Avenue	NO METER	RETROFIT
6731	18TH AV	1.0	North Property Line of 18th Avenue	NO METER	RETROFIT
6760	18TH AV	1.0	14'EWLL-8'SSC in driveway □□(should be WELL)	NO METER	RETROFIT
6770	18TH AV	1.0	Same as Corp Cock - 31' S of Main - at SPL 18th Avenue	NO METER	RETROFIT
6775	18TH AV	1.0	5' NNC of 18th - 20' EWLL of 6775 of 18th	NO METER	RETROFIT
6780	18TH AV	1.0	1' EWLL, 4' SSC of 18th Avenue	NO METER	RETROFIT
6785	18TH AV			NO METER	RETROFIT
6830	18TH AV	1.0	17'WELL, 5'SSC in box	NO METER	RETROFIT
6831	18TH AV	1.0	16' EWLL and 34' WELL	NO METER	RETROFIT
6837	18TH AV	1.0	36' EWLL - 5' NNC 18th Avenue	NO METER	RETROFIT

Colonia Heights (6M4)					
STREET_#	STREET_NAM	WS_TapSize	WS_CurbSto	(E) Mtr Status	(P) Work
6840	18TH AV	1.0	41' EWLL - 9' WELL - 27' NSPL of 18th Avenue	NO METER	RETROFIT
6841	18TH AV	1.0	36' WELL - 14' EWLL - 5' NNC - 18th Avenue	NO METER	RETROFIT
6848	18TH AV	1.0	9' EWLL - 27' NSPL of 18th Avenue	NO METER	RETROFIT
6851	18TH AV	1.0	6' WELL - 6' NNC 18th Avenue	NO METER	RETROFIT
6905	18TH AV	1.0	3' EWPL, 5' NNC	NO METER	RETROFIT
6911	18TH AV	1.0	129' EEPL 69th St., 35 1/2' WELL, 14 1/2' EWLL, on NPL 18th Avenue	NO METER	RETROFIT
6915	18TH AV	1.0	4' WELL, 5' NNC of 18th Avenue	NO METER	RETROFIT
6930	18TH AV	1.0	Same as Corp Cock - 40' EWPL of Lot, SPL 18th Avenue	NO METER	RETROFIT
6934	18TH AV			NO METER	RETROFIT
6934	18TH AV	1.0	21' EWLL - 5' SSC of 18th Avenue	NO METER	RETROFIT
6969	18TH AV	1.0	14' N of Main - at NPL 18th Avenue	NO METER	RETROFIT
6970	18TH AV	1.0	386' W C/L 71St - 7.5' N C/ L 18th Avenue	NO METER	RETROFIT
6975	18TH AV			NO METER	RETROFIT
6990	18TH AV	1.0	27' WELL & 35' EWLL & 23' NS Cb. of 18th Avenue	NO METER	RETROFIT
7000	18TH AV	1.0	Same as Corp Cock - at SPL 18th Avenue	NO METER	RETROFIT
7001	18TH AV	1.0	26' WELL, 49' EWLL, Back of Walk	NO METER	RETROFIT
7005	18TH AV	1.0	33' WELL - 35' EWLL - 14' N of Main at NPL of 18th Avenue	NO METER	RETROFIT
7020	18TH AV	1.0	16'6" WELL - 37' 6" EWLL on SPL of 18th Avenue	NO METER	RETROFIT
7040	18TH AV	1.0	17' EWLL- 39' WELL 5' SSC of 18th Ave in Box in driveway.	NO METER	RETROFIT
7060	18TH AV	1.0	19' WELL 6' SSC of 7060 18th Avenue in S/P	NO METER	RETROFIT
7531	18TH AV	1.0	1) 62' WWC of 76th St., 6' NNC of 18th Ave. (3/4/06)□□2) Same & 6' N	NO METER	RETROFIT
7600	18TH AV	1.0	7 1/2' WELL @ SPL 18th Avenue	NO METER	RETROFIT
7608	18TH AV	1.0	87' S of S Curb of Ferran Ave & 9' N of SLL	NO METER	RETROFIT
7610	18TH AV	1.25	9' EWLL & on SPL 18th Avenue	NO METER	RETROFIT
7620	18TH AV	1.25	7' WELL - 1' SNLL 7620 18th Ave	NO METER	RETROFIT
7627	18TH AV	1.0	13 EWLL - 107' WELL - 1' NSPL 5' NNC 7627 18th Avenue in S/P	NO METER	RETROFIT
7628	18TH AV	1.25	1 1/2' WELL - 1 1/2' SNLL 7634 18th Ave	NO METER	RETROFIT
7707	18TH AV		Same- 3' EEC 77th Street	NO METER	RETROFIT
7710	18TH AV			NO METER	RETROFIT
7711	18TH AV	1.0	13' EWLL - 5' NNC	NO METER	RETROFIT
7721	18TH AV	1.0	Same - 2' NSLL	NO METER	RETROFIT
7821	18TH AV	1.0	Same & 5' NNC 18th Avenue	NO METER	RETROFIT
7831	18TH AV	1.0	Same & 6' NNC 18th Avenue	NO METER	RETROFIT
7841	18TH AV	1.0	7' NNC of 18th Avenue - 34' WELL (Standpipe)	NO METER	RETROFIT
7851	18TH AV	1.0	1) 16' WELL, 6' NNC O/18TH AVE (10/6/06)□□2) 18' WEC 79th St - 18	NO METER	RETROFIT
7858	18TH AV	1.0	32' W of WPL of 79th S and 75' E of W Lot Line	NO METER	RETROFIT
7901	18TH AV			NO METER	RETROFIT
7921	18TH AV			NO METER	RETROFIT
7929	18TH AV			NO METER	RETROFIT

Colonia Heights (6M4)					
STREET_#	STREET_NAM	WS_TapSize	WS_CurbSto	(E) Mtr Status	(P) Work
7933	18TH AV			NO METER	RETROFIT
7933	18TH AV			NO METER	RETROFIT
7938	18TH AV			NO METER	RETROFIT
7944	18TH AV			NO METER	RETROFIT
7948	18TH AV			NO METER	RETROFIT
8000	18TH AV			NO METER	RETROFIT
8016	18TH AV			NO METER	RETROFIT
6838	18TH AV A	1.0	23' WELL, 5' SSC in box	NO METER	RETROFIT
5840	19TH AV	1.0	15' WELL - 5' SSC	NO METER	RETROFIT
5841	19TH AV	0.75	9 1/2' EWLL - 7' NNC 19th Avenue	NO METER	RETROFIT
5850	19TH AV	1.0	9' WELL - 5' SSC	NO METER	RETROFIT
5851	19TH AV	1.0	24' EWLL - 6' NNC 26' WELL	NO METER	RETROFIT
5860	19TH AV	1.0	9' WELL - 5' SSC	NO METER	RETROFIT
5861	19TH AV	1.0	25' EWLL - 5' NNC	NO METER	RETROFIT
5870	19TH AV	1.0	10' WELL - 5' SSC	NO METER	RETROFIT
5871	19TH AV	1.0	24' EWLL - 5' NNC in C/S Box	NO METER	RETROFIT
5880	19TH AV	1.0	30' EWLL, 5' SSC of 19th Ave in a box	NO METER	RETROFIT
5881	19TH AV	1.0	24' EWLL - 18' SNC	NO METER	RETROFIT
5890	19TH AV	1.0	27' EWLL - 5' SSC	NO METER	RETROFIT
5900	19TH AV	1.0	25' EWLL - 5' SSC	NO METER	RETROFIT
5901	19TH AV	1.0	27' EWLL - 6' NNC	NO METER	RETROFIT
5910	19TH AV	1.0	30' EWLL - 5' SSC	NO METER	RETROFIT
5911	19TH AV	1.0	25' EWLL - 5' NNC	NO METER	RETROFIT
5920	19TH AV	1.0	29' EWLL - 5' NSC	NO METER	RETROFIT
5921	19TH AV	1.0	23' EWLL - 18' SNC	NO METER	RETROFIT
5925	19TH AV	1.0	25' EWLL, 27' WELL, 5' NNC	NO METER	RETROFIT
5930	19TH AV	1.0	27' EWLL - 5' SSC	NO METER	RETROFIT
5931	19TH AV	1.0	25' EWLL - 6' NNC	NO METER	RETROFIT
5940	19TH AV	1.0	25' EWLL - 5' SSC	NO METER	RETROFIT
5950	19TH AV	1.0	27' EWLL - 5' SSC	NO METER	RETROFIT
5951	19TH AV	1.0	24' EWLL - 5 1/2' NNC	NO METER	RETROFIT
5960	19TH AV	1.0	20' EWLL - 5' SSC	NO METER	RETROFIT
5961	19TH AV	1.0	17' EWLL - 6' NNC	NO METER	RETROFIT
5971	19TH AV	1.0	11' EWLL - Back of Sidewalk	NO METER	RETROFIT
5980	19TH AV		20' SNPL, 5' WWC	NO METER	RETROFIT
5981	19TH AV	1.0	15' NSPL 5' WWC	NO METER	RETROFIT
6000	19TH AV	1.0	15' SNPL 5' EEC	NO METER	RETROFIT
6001	19TH AV		20' NSPL 5' EEC	NO METER	RETROFIT
6030	19TH AV		20' SNPL 5' WWC	NO METER	RETROFIT

Colonia Heights (6M4)					
STREET_#	STREET_NAM	WS_TapSize	WS_CurbSto	(E) Mtr Status	(P) Work
6031	19TH AV		15' NSPL 2' WWC	NO METER	RETROFIT
6040	19TH AV		15' SNPL 5' EEC	NO METER	RETROFIT
6041	19TH AV			NO METER	RETROFIT
6041	19TH AV		19' NSPL 6' EEC	NO METER	RETROFIT
6050	19TH AV		20' SNPL 5' WWC	NO METER	RETROFIT
6051	19TH AV		16' NSPL 5' WWC	NO METER	RETROFIT
6100	19TH AV		16' SNPL 5' EEC	NO METER	RETROFIT
6101	19TH AV		20' NSPL 4' EEC	NO METER	RETROFIT
6120	19TH AV		10' SNPL 7' WWC	NO METER	RETROFIT
6121	19TH AV		21' NSPL 5' WWC	NO METER	RETROFIT
6640	19TH AV			NO METER	RETROFIT
6641	19TH AV	1.0	10' NSLL - 6' WWC 19th Avenue	NO METER	RETROFIT
6646	19TH AV	1.0	1' EWLL - 22' WELL - 1' SSPL of 19th Avenue	NO METER	RETROFIT
6647	19TH AV	1.0	NPL of 19th Avenue	NO METER	RETROFIT
6652	19TH AV	1.0	2' SSPL of 19th Avenue	NO METER	RETROFIT
6653	19TH AV	1.0	2' NNPL 19th Avenue	NO METER	RETROFIT
6658	19TH AV	1.0	2' SSPL of 19th Avenue	NO METER	RETROFIT
6661	19TH AV	1.0	2' NNPL of 19th Avenue	NO METER	RETROFIT
7937	19TH AV			NO METER	RETROFIT
7937	19TH AV			NO METER	RETROFIT
8021	19TH AV	1.0	80' EWLL - 10' WELL - 5' NNC of 19th Avenue	NO METER	RETROFIT
8024	19TH AV			NO METER	RETROFIT
8030	19TH AV			NO METER	RETROFIT
5800	20TH AV	1.0	71.3' E of the Centerline 58th St. or 20.7' WELL on SPL 20th Avenue	NO METER	RETROFIT
5801	20TH AV	1.0	72.3' E of Centerline 58th St. or 19.7' WELL on NPL 20th Avenue	NO METER	RETROFIT
5802	20TH AV			NO METER	RETROFIT
5805	20TH AV	1.0	123.6' E of the Centerline of 58th St. or 25.4' WELL on SPL 20th Avenu	NO METER	RETROFIT
5808	20TH AV	1.0	179.1' E of Centerline 58th St. or 26.9' WELL on SPL □□20th Avenue	NO METER	RETROFIT
5809	20TH AV	1.0	180' E of Centerline 58th St. or 26' WELL on NPL 20th Avenue	NO METER	RETROFIT
5812	20TH AV	1.0	28 1/2' WELL & 6 1/2' SSC	NO METER	RETROFIT
5813	20TH AV	1.0	237.1' E of Centerline 58th St. or 26.9' WELL on NPL 20th Avenue	NO METER	RETROFIT
5816	20TH AV	1.0	296.3' E of Centerline 58th St. or 25.7' WELL - on SPL 20th Avenue	NO METER	RETROFIT
5817	20TH AV	1.0	295.8' E of Centerline 58th St. or 26.2' WELL on NPL 20th Avenue	NO METER	RETROFIT
5820	20TH AV	1.0	352.0' E of Centerline 58th St. or 28' WELL on SPL 20th Avenue	NO METER	RETROFIT
5821	20TH AV	1.0	351.8' E of Centerline 58th St. or 28.2' WELL on NPL 20th Avenue	NO METER	RETROFIT
5824	20TH AV	1.0	410.9' E of Centerline of 58th St. or 27.1' WELL on SPL 20th Avenue	NO METER	RETROFIT
5825	20TH AV	1.0	412.1' E of Centerline 58th Street, or 25.9' WELL on NPL 20th Avenue	NO METER	RETROFIT
5828	20TH AV	1.0	469' E of Centerline 58 St, & 27' WELL	NO METER	RETROFIT
5829	20TH AV	1.0	31 1/2' WELL Behind Sidewalk	NO METER	RETROFIT

Colonia Heights (6M4)					
STREET_#	STREET_NAM	WS_TapSize	WS_CurbSto	(E) Mtr Status	(P) Work
5832	20TH AV	1.0	528.5' E of Centerline 58th St. or 25.5' WELL on SPL 20th Avenue	NO METER	RETROFIT
5833	20TH AV	1.0	26' WELL - 6' NNC 20th Avenue	NO METER	RETROFIT
5836	20TH AV	1.0	589. 4' E of Centerline 58th St. or 22.6' WELL on SPL 20th Avenue	NO METER	RETROFIT
5837	20TH AV	1.0	588.9' E of Centerline 58th St.	NO METER	RETROFIT
5840	20TH AV	1.0	638.2' E of Centerline 58th St. or 26.2' EWLL on SPL 20th Avenue	NO METER	RETROFIT
5844	20TH AV	1.0	695.0' E of Centerline 58th St., or 16.16' WELL (Meas. Along Curvature	NO METER	RETROFIT
7100	20TH AV	1.0	8' WWC - 5' NSLL in Driveway	NO METER	RETROFIT
7111	20TH AV	1.0	46' EWLL, 6' WELL, 8' NNC in s/p	NO METER	RETROFIT
7120	20TH AV	1.0	Same as Corp Cock - 28' S of Main - at SPL 20th Avenue	NO METER	RETROFIT
7121	20TH AV	1.0	Same as Corp Cock - 38' EWLL, NPL 20th Avenue	NO METER	RETROFIT
7140	20TH AV	1.0	35' EWLL - 32' WELL - 30' S. of Main at SPL of 20th Avenue	NO METER	RETROFIT
7141	20TH AV	1.0	Same as Corp. Cock - N. of Main at NPL - 20th Avenue	NO METER	RETROFIT
7200	20TH AV	1.0	Same as Corp Cock - 26' S of Main - at SPL 20th Avenue	NO METER	RETROFIT
7201	20TH AV	1.0	Same as Cock - 18' N. of Main at NPL 20th Avenue	NO METER	RETROFIT
7220	20TH AV	1.0	Same as CC 27' S of Main at SPL 20th Avenue	NO METER	RETROFIT
7221	20TH AV	1.0	31' WELL - 20' EWLL on NPL of 20th Avenue	NO METER	RETROFIT
7240	20TH AV	1.0	Same as Corp Cock, 27' S of Main at SPL 20th Avenue	NO METER	RETROFIT
7241	20TH AV	1.0	21' N of Main - at NPL 20th Avenue	NO METER	RETROFIT
7260	20TH AV	1.0	1' SSPL	NO METER	RETROFIT
7261	20TH AV	1.0	30' WELL or 22' EWLL & 6' NNC 20th Avenue	NO METER	RETROFIT
7280	20TH AV	1.0	8' SSC, 4' EWLL	NO METER	RETROFIT
7281	20TH AV	1.0	50' EWLL on ELL on NPL of 20th Avenue	NO METER	RETROFIT
7298	20TH AV	1.0	Same & 7' SSC 20th Avenue	NO METER	RETROFIT
7299	20TH AV	1.0	Same & 6' WWC 73rd Street	NO METER	RETROFIT
7647	20TH AV	1.0	32' WELL, behind walk	NO METER	RETROFIT
7667	20TH AV	1.0	39' WELL - 7' NNC 20th Avenue	NO METER	RETROFIT
7820	20TH AV	1.0	31' EWLL - 6' SSC 20th Avenue in Box	NO METER	RETROFIT
7840	20TH AV	1.0	27' EWLL - 7' SSC 20th Avenue	NO METER	RETROFIT
7841	20TH AV	1.0	Same & Back of Walk	NO METER	RETROFIT
7860	20TH AV	1.0	Same & Back of Walk	NO METER	RETROFIT
7880	20TH AV	1.0	25' EWLL, 7' SSC of 20th Avenue in Box, 44' WWC of 79th St.	NO METER	RETROFIT
5803	21ST AV			NO METER	RETROFIT
5813	21ST AV	1.0	Same as Corp and Behind Sidewalk	NO METER	RETROFIT
5815	21ST AV	1.0	Same as Corp and Behind Sidewalk	NO METER	RETROFIT
5817	21ST AV	1.0	24' NSLL - 26' WELL 5817 21st Avenue - 2' Back of Sidewalk	NO METER	RETROFIT
5819	21ST AV	1.0	12' EEC of 21st ave, 1' SNLL of 5825 21st ave in box	NO METER	RETROFIT
5821	21ST AV	1.0	Same & 1' SNPL	NO METER	RETROFIT
5823	21ST AV	1.0	Same as Corp and Behind Sidewalk	NO METER	RETROFIT
5835	21ST AV			NO METER	RETROFIT

Colonia Heights (6M4)					
STREET_#	STREET_NAM	WS_TapSize	WS_CurbSto	(E) Mtr Status	(P) Work
5845	21ST AV			NO METER	RETROFIT
6201	21ST AV	1.0	3' EWLL 6201 21st Avenue & on NPL 21st Avenue	NO METER	RETROFIT
6207	21ST AV	1.0	29' EWLL & 13' WELL & 19' SNPL of 21st Avenue	NO METER	RETROFIT
6215	21ST AV	1.0	2' WELL - 48' EWLL - 1' NNPL	NO METER	RETROFIT
6221	21ST AV	1.0	15' WELL - 35' EWLL - 1' NNPL 21st Avenue	NO METER	RETROFIT
6231	21ST AV	1.0	Same as Corp Cock - 85' EWLL, NPL 21st Avenue	NO METER	RETROFIT
6305	21ST AV	1.0	Same & 1' NNPL 21st Avenue	NO METER	RETROFIT
6311	21ST AV	1.0	Same as Corp Cock - 16' N of Main - at NPL 21st Avenue	NO METER	RETROFIT
6380	21ST AV	1.0	Same & 6' WWC 64th Street	NO METER	RETROFIT
6390	21ST AV	1.0	Same & 6' WWC 64th Street	NO METER	RETROFIT
6401	21ST AV	1.0	Same & 1' NNPL 6401 21st Avenue	NO METER	RETROFIT
6411	21ST AV	1.0	Same & 1' NNPL 6411 21st Avenue	NO METER	RETROFIT
6421	21ST AV	1.0	33' EWLL - 17' WELL - 1' NNPL 21st Ave; 348 EWLL - 15' WELL - 16'	NO METER	RETROFIT
6431	21ST AV	1.0	Same & 1' NNPL 6431 21st Avenue	NO METER	RETROFIT
6441	21ST AV	1.0	Same & 1' NNPL 6441 21st Avenue	NO METER	RETROFIT
6501	21ST AV	1.0	16' WELL, 6' NNC in box	NO METER	RETROFIT
6509	21ST AV	1.0	Same & 6' NNC of 6509 21st Avenue (in Standpipe) 1-30-1991	NO METER	RETROFIT
6515	21ST AV	1.0	17' N of Main at NPL of 21st Avenue	NO METER	RETROFIT
6551	21ST AV	1.0	1) 49' WELL, 4' NNC of 21st ave. in irrigation box □□(11/15/05)	NO METER	RETROFIT
6553	21ST AV	1.0	1) 50' WELL, 5' NNC of 21st Ave. (11/15/05)□□2) Same & 1' NNPL 65	NO METER	RETROFIT
6611	21ST AV	1.0	1) 1' WWLL, 6' NNC in c/s box (9/7/05)□□2) 2 1/2' WWLL 6611 21st A	NO METER	RETROFIT
6721	21ST AV	1.0	52' WELL - 8' EWLL - 2'6" NNPL of 21st Avenue	NO METER	RETROFIT
6741	21ST AV	1.0	47' 6" EWLL - 12'6" WELL - 1' NNPL 21st Avenue	NO METER	RETROFIT
6761	21ST AV	1.0	1) 6' NNC of 21st Ave., 30' WELL in box (11/7/05)□□2) 361' WWPL 69	NO METER	RETROFIT
6801	21ST AV	1.0	1) 16' WELL, 16'EWLL, 4' NNC 21st Avenue (1/23/06)□□2) 16' WELL,	NO METER	RETROFIT
6811	21ST AV	1.0	23' 6" WELL - 1' NNPL of 21st Avenue	NO METER	RETROFIT
6821	21ST AV	1.0	17' WELL - 5' NNC 21st Avenue	NO METER	RETROFIT
6841	21ST AV	1.0	1) 14' NSLL, 65' SNLL, 6' WELL of 6841 21st (7/27/05)□□2) 5' WELL -	NO METER	RETROFIT
6901	21ST AV	1.0	Same as Corp Cock - 37' E of Main - at EPL 69th Street	NO METER	RETROFIT
6907	21ST AV	1.0	Same as Corp Cock - 17' WELL, 20" NN Sidewalk 21st Avenue	NO METER	RETROFIT
6921	21ST AV	1.0	22' WELL 6921 21st Avenue - 32' EWLL	NO METER	RETROFIT
6933	21ST AV		34' EWLL - 7' NNC 21st Avenue	NO METER	RETROFIT
7001	21ST AV	1.0	3' WELL - 6' NNC in Box	NO METER	RETROFIT
7011	21ST AV	1.0	Same as CC 32' N of Main at NPL 21st Avenue	NO METER	RETROFIT
7021	21ST AV	1.0	48' 6" EWLL, 1'6" WELL, 1'6" NNPL 21st Avenue	NO METER	RETROFIT
7031	21ST AV	1.0	2' EWLL, 8' NNC of 21st Avenue in S/P	NO METER	RETROFIT
7041	21ST AV	1.0	47' WELL, 3' EWLL, 1' NNPL 21st Avenue	NO METER	RETROFIT
7101	21ST AV	1.0	51' EEPL of 71st St, 51' WELL & 1' NNPL of 21st Avenue	NO METER	RETROFIT
7121	21ST AV	1.0	24' WELL, 33' EWLL & 1' NNPL of 21st Avenue	NO METER	RETROFIT

Colonia Heights (6M4)					
STREET_#	STREET_NAM	WS_TapSize	WS_CurbSto	(E) Mtr Status	(P) Work
7141	21ST AV	1.0	Same as below (Location) & 1' NNPL of 21st Avenue	NO METER	RETROFIT
7201	21ST AV	1.0	Same as below (Location) & 1' NNPL of 21st Avenue	NO METER	RETROFIT
7221	21ST AV	1.0	Same as below (Location) & 1' NNPL of 21st Avenue	NO METER	RETROFIT
7241	21ST AV	1.0	Same as below (Location) & 1' NNPL of 21st Avenue	NO METER	RETROFIT
7261	21ST AV	1.0	Same as below (Location) & 1' NNPL of 21st Avenue	NO METER	RETROFIT
7281	21ST AV			NO METER	RETROFIT
7299	21ST AV	1.0	32 1/2' EWLL - 7' NNC 21st Avenue in Box	NO METER	RETROFIT
8135	21ST AV			NO METER	RETROFIT
8221	21ST AV			NO METER	RETROFIT
8299	21ST AV	2.0	248' NSPL - 9' EWLL	NO METER	RETROFIT 2"
3941	58TH ST	0.75	1' NSLL - 6' EEC 58th Street	NO METER	RETROFIT
3959	58TH ST	0.75	6' EEC - 6' SNLL 58th Street	NO METER	RETROFIT
4001	58TH ST	0.75	1) 9' EEC of 58th St., 11' SSC of 15th Ave. in s/p □□(3/1/06)	NO METER	RETROFIT
4005	58TH ST	0.75		NO METER	RETROFIT
4007	58TH ST	2.0	C/S at the back of walk	NO METER	RETROFIT 2"
4113	58TH ST	2,1,1	12' WEC 58th Street - 21' NSLL	NO METER	RETROFIT (3) 1" & 2"
4121	58TH ST			NO METER	RETROFIT
4123	58TH ST	0.75	13' SNLL - 6' EEC 58th Street	NO METER	RETROFIT
4125	58TH ST	0.75		NO METER	RETROFIT
4201	58TH ST	1.0	28' SNLL - on EPL 58th Street	NO METER	RETROFIT
4361	58TH ST	0.75	7'SNLL, 5'EEC of 58th St	NO METER	RETROFIT
4365	58TH ST	0.75		NO METER	RETROFIT
4371	58TH ST	1.0	5' EWLL 5841 - 19th Ave - 6' NNC	NO METER	RETROFIT
4375	58TH ST	1.0	17' EEC 58th Street 6' NNC - 19th Ave	NO METER	RETROFIT
4401	58TH ST	1.0	30' EWLL, 5' SSC of 19th Ave in a box	NO METER	RETROFIT
4405	58TH ST	0.75	24' SNLL of 4405 58th Street, 6' EEC of 58th Street in C/s Box	NO METER	RETROFIT
4415	58TH ST	0.75		NO METER	RETROFIT
4425	58TH ST	1.0	49' EEC of 58th Street and at CL of the Street, and on NPL of Mark Tw	NO METER	RETROFIT
4501	58TH ST	1.0	47' EEC of 58th Street and SPL of Mark Twain Ave at the CL of the Lo	NO METER	RETROFIT
4721	58TH ST	0.75		NO METER	RETROFIT
4741	58TH ST			NO METER	RETROFIT
4417	59TH ST	1.0	274' NNC of 20th Avenue (w) & 49' EWC of 59th Street (S)	NO METER	RETROFIT
4426	59TH ST	1.0	41' WWC of 59th Street (S) & at CL of Mark Twain Ave & at SPL of Ma	NO METER	RETROFIT
4427	59TH ST	1.0	180' NNC of 20th Avenue (W) and at C1 of 59th Street and at EP1 of 5	NO METER	RETROFIT
4437	59TH ST			NO METER	RETROFIT
4490	59TH ST	1.0	138' N of Centerline 20th Avenue or 21.4' SNLL on EPL 59th Street	NO METER	RETROFIT
4491	59TH ST	1.0	83.8' N of Centerline 20th Avenue or 21.4' SNLL on EPL 59th Street	NO METER	RETROFIT
4495	59TH ST	1.0	27.5' N of Centerline 20th Avenue or 25.4' SNLL or 35' NSLL (Meas. A	NO METER	RETROFIT

Colonia Heights (6M4)					
STREET_#	STREET_NAM	WS_TapSize	WS_CurbSto	(E) Mtr Status	(P) Work
4499	59TH ST	1.0	11' SNLL 6' EEC	NO METER	RETROFIT
3905	60TH ST	4.0	valve 236=17'EWC of 60th St-16'SSLL of 3919 60th St	NO METER	RETROFIT 4"
3919	60TH ST	1.0	30' SNLL - 12' EEC - 60th Street	NO METER	RETROFIT
3931	60TH ST	1.0	Same - 5' NNC - 15th Avenue	NO METER	RETROFIT
3941	60TH ST	1.0	Same - 6' SSC of 15th Avenue	NO METER	RETROFIT
3951	60TH ST	1.0	Same - 5' SSC - 15th Avenue	NO METER	RETROFIT
4000	60TH ST	1.0	18'SSC of 15th Ave-6'WWC of 60th St in box	NO METER	RETROFIT
4001	60TH ST	1.0	31' EWLL, 6' SSC in c/s box□□	NO METER	RETROFIT
4010	60TH ST	1.0	1) 13' snll - 5' wwc in meter box (1/24/07)□□2) Same - 5' WWC - 60th S	NO METER	RETROFIT
4011	60TH ST	1.0	1) 5' EEC, 13' NSLL in box (10/28/05)□□2) 14' NSLL, 6'EEC 60th St.	NO METER	RETROFIT
4020	60TH ST	1.0	8' SNLL, 5' WWC of 60th St	NO METER	RETROFIT
4030	60TH ST	1.0	1) 18' nsll - 6' wwc in m/box (5/22/07)□□2) 18' NSLL - 5' WWC in mete	NO METER	RETROFIT
4040	60TH ST	1.0	1) 6' WWC, 10' SNLL in box (08/20/07)□□2) Same - 5' WWC - 60th St	NO METER	RETROFIT
4100	60TH ST		23' SNPL 5' WWC	NO METER	RETROFIT
4101	60TH ST		2' WEPL of 4101 60th Street, 40' SSC of16th Avenue in C/B W/Lid	NO METER	RETROFIT
4110	60TH ST		16' NSPL 5' WWC	NO METER	RETROFIT
4120	60TH ST		12' SNPL 5'WWC	NO METER	RETROFIT
4121	60TH ST		18' SNPL 4.5' EEC	NO METER	RETROFIT
4200	60TH ST		16' SNPL 5' WWC	NO METER	RETROFIT
4201	60TH ST		12' NSPL 5' EEC	NO METER	RETROFIT
4210	60TH ST		10' SNPL 5' WWC	NO METER	RETROFIT
4211	60TH ST		19' SNPL 5' EEC	NO METER	RETROFIT
4220	60TH ST	1.0	34' SNLL - 5' WWC	NO METER	RETROFIT
4221	60TH ST	1.0	16' NSPL 5' EEC	NO METER	RETROFIT
4225	60TH ST			NO METER	RETROFIT
4229	60TH ST		16' NSPL 5' EEC	NO METER	RETROFIT
4234	60TH ST	1.0	11' SNPL 5' WWC	NO METER	RETROFIT
4235	60TH ST		19' SNPL 5' EEC	NO METER	RETROFIT
4238	60TH ST		17' SNPL 5' WWC	NO METER	RETROFIT
4239	60TH ST		16' SNPL 5' EEC	NO METER	RETROFIT
4240	60TH ST		12' SNPL 6' WWC	NO METER	RETROFIT
4241	60TH ST	1.0	25' SNPL, 5' EEC	NO METER	RETROFIT
4244	60TH ST		22' SNPL 5' WWC	NO METER	RETROFIT
4245	60TH ST		10' NSPL 5' EEC	NO METER	RETROFIT
4300	60TH ST	0.75	12' SNPL 5' WWC	NO METER	RETROFIT
4301	60TH ST		20' SNPL 5' EEC	NO METER	RETROFIT
4310	60TH ST		13' NSPL 5' WWC	NO METER	RETROFIT
4311	60TH ST		20' SNPL 6' EEC	NO METER	RETROFIT
4320	60TH ST		8' SNPL 5' WWC	NO METER	RETROFIT

Colonia Heights (6M4)					
STREET_#	STREET_NAM	WS_TapSize	WS_CurbSto	(E) Mtr Status	(P) Work
4321	60TH ST		20' SNPL 6' EEC	NO METER	RETROFIT
4324	60TH ST		19' NSPL 5' WWC	NO METER	RETROFIT
4325	60TH ST	0.75	9' NSPL 5' EEC	NO METER	RETROFIT
4328	60TH ST		17' NSPL 5' WWC	NO METER	RETROFIT
4329	60TH ST			NO METER	RETROFIT
4400	60TH ST		75' SSC of 19th Avenue - 103' WWC of 60th Street	NO METER	RETROFIT
4401	60TH ST		11' NSPL 5' EEC	NO METER	RETROFIT
4410	60TH ST		14' SNPL 5' WWC	NO METER	RETROFIT
4411	60TH ST		19' SNPL 7' EEC	NO METER	RETROFIT
4420	60TH ST		14' NSPL 5' WWC	NO METER	RETROFIT
4421	60TH ST		22' NSPL 5' EEC	NO METER	RETROFIT
4424	60TH ST		11' SNPL 5' WWC	NO METER	RETROFIT
4425	60TH ST		13' NSPL 5' EEC	NO METER	RETROFIT
4428	60TH ST	1.0	8' SNPL 5' WWC	NO METER	RETROFIT
4429	60TH ST		17' SNPL 5' EEC	NO METER	RETROFIT
4434	60TH ST		17' NSPL 5' WWC	NO METER	RETROFIT
4435	60TH ST		22' NSPL 5' EEC	NO METER	RETROFIT
4438	60TH ST		19' SNPL 5' WWC	NO METER	RETROFIT
4439	60TH ST		9' SNPL 5' EEC	NO METER	RETROFIT
4440	60TH ST	1.0	16' NSPL 5' WWC	NO METER	RETROFIT
4441	60TH ST	1.0	23' SNPL 5' EEC	NO METER	RETROFIT
4500	60TH ST		15' NSPL 5' WWC	NO METER	RETROFIT
4501	60TH ST		6' NSPL 5' EEC	NO METER	RETROFIT
4510	60TH ST	1.0	13' SNPL 5' WWC	NO METER	RETROFIT
4511	60TH ST		18' SNPL 5' EEC	NO METER	RETROFIT
4520	60TH ST		5' SNPL 5' WWC	NO METER	RETROFIT
4521	60TH ST		10' NSPL 5' EEC	NO METER	RETROFIT
4624	60TH ST		16' SNPL 5' WWc	NO METER	RETROFIT
4625	60TH ST		24' SNPL 5' EEc	NO METER	RETROFIT
4628	60TH ST		22' NSPL 5' WWc	NO METER	RETROFIT
4629	60TH ST	1.0	25' SNPL 5' EEC	NO METER	RETROFIT
4634	60TH ST			NO METER	RETROFIT
4635	60TH ST		15' SNPL 5' EEC	NO METER	RETROFIT
4738	60TH ST		32' SNPL 5' WWC	NO METER	RETROFIT
4739	60TH ST		13' NSPL 5' EEC	NO METER	RETROFIT
4740	60TH ST		57' NSPL 5' WWC	NO METER	RETROFIT
4741	60TH ST		46' NSPL 5' EEc	NO METER	RETROFIT
4100	61ST ST		42' NSPL 5' WWC	NO METER	RETROFIT
4111	61ST ST		11' NSPL 5' EEC	NO METER	RETROFIT

Colonia Heights (6M4)					
STREET_#	STREET_NAM	WS_TapSize	WS_CurbSto	(E) Mtr Status	(P) Work
4120	61ST ST		23' NSPL 5' WWC	NO METER	RETROFIT
4121	61ST ST	1.0	8' NSPL 5' EEC	NO METER	RETROFIT
4130	61ST ST		9' SNPL 5' WWC	NO METER	RETROFIT
4131	61ST ST			NO METER	RETROFIT
4140	61ST ST		15' SNPL 6' WWC	NO METER	RETROFIT
4141	61ST ST		10' NSPL 5' EEC	NO METER	RETROFIT
4200	61ST ST		15' SNPL 5' WWC	NO METER	RETROFIT
4201	61ST ST		15' NSPL 5' EEC	NO METER	RETROFIT
4210	61ST ST		17' NSPL 5' WWc	NO METER	RETROFIT
4211	61ST ST	1.0	18' SNPL 5' EEC	NO METER	RETROFIT
4220	61ST ST		11' SNPL 5' WWC	NO METER	RETROFIT
4221	61ST ST	0.75	11' NSPL 5' EEC	NO METER	RETROFIT
4224	61ST ST		22' SNPL 5' WWC	NO METER	RETROFIT
4225	61ST ST	0.75	18' SNPL 5' EEC	NO METER	RETROFIT
4228	61ST ST	0.75	12' SNPL 5' WWC	NO METER	RETROFIT
4229	61ST ST		16' NSPL 5' EEC	NO METER	RETROFIT
4234	61ST ST		16' NSPL 5' WWC	NO METER	RETROFIT
4235	61ST ST		11' NSPL 5' EEc	NO METER	RETROFIT
4238	61ST ST	0.75	22' SNPL 6' WWC	NO METER	RETROFIT
4239	61ST ST		25' SNPL 5' EEC□□	NO METER	RETROFIT
4240	61ST ST		19' NSPL 5' WWC	NO METER	RETROFIT
4241	61ST ST		15' NSPL 5' EEC	NO METER	RETROFIT
4244	61ST ST	1.5	13' SNPL 5' WWC	NO METER	RETROFIT
4245	61ST ST		12' NSPL 5' EEC	NO METER	RETROFIT
4300	61ST ST	0.75	25' SNPL 5' WWC	NO METER	RETROFIT
4301	61ST ST		8' NSPL 5' EEC	NO METER	RETROFIT
4310	61ST ST		19' NSPL 5' WWC	NO METER	RETROFIT
4311	61ST ST		20' NSPL 5' EEC	NO METER	RETROFIT
4320	61ST ST		16' SNPL 5' WWC	NO METER	RETROFIT
4321	61ST ST		20' SNPL 5' EEC	NO METER	RETROFIT
4324	61ST ST		11' SNPL 5' WWC	NO METER	RETROFIT
4325	61ST ST		13' NSPL 5' EEC	NO METER	RETROFIT
4328	61ST ST		18' NSPL 5' WWC	NO METER	RETROFIT
4329	61ST ST		11' NSPL 5' EEC	NO METER	RETROFIT
4400	61ST ST	1.0	25' NSPL 5' WWC	NO METER	RETROFIT
4401	61ST ST		16' SNPL 5' EEC	NO METER	RETROFIT
4410	61ST ST	1.0	10' SNPL 5' WWC	NO METER	RETROFIT
4411	61ST ST		14' NSPL 5' EEC	NO METER	RETROFIT
4420	61ST ST		18' NSPL 5' WWC	NO METER	RETROFIT

Colonia Heights (6M4)					
STREET_#	STREET_NAM	WS_TapSize	WS_CurbSto	(E) Mtr Status	(P) Work
4421	61ST ST		21' NSPL 5' EEC	NO METER	RETROFIT
4424	61ST ST		10' SNPL 5' WWC	NO METER	RETROFIT
4425	61ST ST		6' NSPL 5' EEC	NO METER	RETROFIT
4428	61ST ST	1.0	14' SNPL 5' WWC	NO METER	RETROFIT
4429	61ST ST		18' SNPL 5' EEC	NO METER	RETROFIT
4434	61ST ST		17' NSPL 5' WWC	NO METER	RETROFIT
4435	61ST ST		11' NSPL 6' EEC	NO METER	RETROFIT
4438	61ST ST		13' SNPL 6' WWC	NO METER	RETROFIT
4439	61ST ST	1.0	17' SNPL 5' EEC	NO METER	RETROFIT
4440	61ST ST		10' SNPL 5' WWC	NO METER	RETROFIT
4441	61ST ST		25' SNPL 5' EEC	NO METER	RETROFIT
4500	61ST ST		16' NSPL- 5' WWC	NO METER	RETROFIT
4501	61ST ST		10' NSPL 5' EEC	NO METER	RETROFIT
4510	61ST ST		15' SNPL 5' WWC	NO METER	RETROFIT
4511	61ST ST		17' SNPL 5' EEC	NO METER	RETROFIT
4520	61ST ST	1.0	10' SNPL 5' WWC	NO METER	RETROFIT
4521	61ST ST		14' NSPL 5' EEC	NO METER	RETROFIT
4624	61ST ST	1.0	14' SNLL, 6' WWC of 61st Street in c/s box	NO METER	RETROFIT
4625	61ST ST	1.0	22' SNPL-5' EEC	NO METER	RETROFIT
4628	61ST ST		23' NSPL 5' WWC	NO METER	RETROFIT
4629	61ST ST		7' NSPL 5' EEC	NO METER	RETROFIT
4634	61ST ST		25' NSPL 7' WWC	NO METER	RETROFIT
4635	61ST ST	1.0	19' SNPL 5' EEC	NO METER	RETROFIT
4738	61ST ST	0.75	23' NSPL 6' WWC	NO METER	RETROFIT
4739	61ST ST		24' NSPL 5' EEC	NO METER	RETROFIT
4740	61ST ST		39' SNPL 4' WWC	NO METER	RETROFIT
4741	61ST ST	1.0	13' NSPL 5' EEC	NO METER	RETROFIT
3900	62ND ST	1.0	Same - 5' WWC - 62nd Street	NO METER	RETROFIT
3910	62ND ST	1.0	Same - 5' WWC - 62nd Street	NO METER	RETROFIT
3911	62ND ST	1.0	Same - 5' EEC - 62nd Street	NO METER	RETROFIT
3920	62ND ST	1.0	19' nsll 5' wwc in box	NO METER	RETROFIT
3921	62ND ST	1.0	1) 4'6" EEC - 7' NSLL in SP (8/2/06)□□2) Same - 5' EEC - 62nd Street	NO METER	RETROFIT
3931	62ND ST	1.0	45' NSLL - 7' EEC of 62nd Street in Stand pipe	NO METER	RETROFIT
4001	62ND ST	1.0	18' NSLL - 5' EEC - 62nd Street	NO METER	RETROFIT
4010	62ND ST	1.0	94' SSC 15th Avenue - 5' WWC 62nd Street	NO METER	RETROFIT
4011	62ND ST	1.0	Same - 4'6" EEC - 62nd Street	NO METER	RETROFIT
4021	62ND ST	1.0	3' SNLL, 13' WELL In ROW	NO METER	RETROFIT
4031	62ND ST	1.0	Same - 5' EEC - 62nd Street	NO METER	RETROFIT
4041	62ND ST			NO METER	RETROFIT

Colonia Heights (6M4)					
STREET_#	STREET_NAM	WS_TapSize	WS_CurbSto	(E) Mtr Status	(P) Work
4101	62ND ST	1.0	22' SNLL - 33' NSLL - 11 1/2' WEPL	NO METER	RETROFIT
4110	62ND ST			NO METER	RETROFIT
4111	62ND ST			NO METER	RETROFIT
4120	62ND ST			NO METER	RETROFIT
4121	62ND ST			NO METER	RETROFIT
4130	62ND ST			NO METER	RETROFIT
4131	62ND ST		22' SNLL - 14' WELL	NO METER	RETROFIT
4140	62ND ST			NO METER	RETROFIT
4141	62ND ST	0.75	12' NSLL - 40' SNLL - 12' WEPL	NO METER	RETROFIT
4200	62ND ST	0.75		NO METER	RETROFIT
4201	62ND ST			NO METER	RETROFIT
4210	62ND ST			NO METER	RETROFIT
4211	62ND ST			NO METER	RETROFIT
4220	62ND ST		18' NSLL on WPL	NO METER	RETROFIT
4221	62ND ST		17' WEPL 11' NSLL of 4221 62nd Street in Box	NO METER	RETROFIT
4224	62ND ST			NO METER	RETROFIT
4225	62ND ST			NO METER	RETROFIT
4228	62ND ST			NO METER	RETROFIT
4229	62ND ST			NO METER	RETROFIT
4234	62ND ST		19' NSLL @ WLL	NO METER	RETROFIT
4235	62ND ST			NO METER	RETROFIT
4238	62ND ST			NO METER	RETROFIT
4239	62ND ST			NO METER	RETROFIT
4240	62ND ST			NO METER	RETROFIT
4241	62ND ST			NO METER	RETROFIT
4244	62ND ST		11' SNLL & 43' NSLL of 4244 62nd St, 5' WWC of 62nd St	NO METER	RETROFIT
4245	62ND ST	0.75	97' EEC - 11' NSLL - 6 1/2 WELL - 62nd Street in Standpipe	NO METER	RETROFIT
4300	62ND ST			NO METER	RETROFIT
4301	62ND ST			NO METER	RETROFIT
4310	62ND ST			NO METER	RETROFIT
4311	62ND ST			NO METER	RETROFIT
4320	62ND ST			NO METER	RETROFIT
4321	62ND ST			NO METER	RETROFIT
4324	62ND ST		11 1/2' SNLL - WLL	NO METER	RETROFIT
4325	62ND ST		17 1/2' SNLL, 15' WELL	NO METER	RETROFIT
4328	62ND ST			NO METER	RETROFIT
4329	62ND ST	0.75	30' SNLL - 16 1/2' WELL	NO METER	RETROFIT
4335	62ND ST	0.75	34' 6" NSLL - 15' 6" WELL	NO METER	RETROFIT
4339	62ND ST			NO METER	RETROFIT

Colonia Heights (6M4)					
STREET_#	STREET_NAM	WS_TapSize	WS_CurbSto	(E) Mtr Status	(P) Work
4341	62ND ST			NO METER	RETROFIT
4400	62ND ST			NO METER	RETROFIT
4401	62ND ST	1.0	31 1/2' NSLL - 16' WELL ROW - 62nd Street, 32' SNLL	NO METER	RETROFIT
4410	62ND ST			NO METER	RETROFIT
4411	62ND ST			NO METER	RETROFIT
4420	62ND ST			NO METER	RETROFIT
4421	62ND ST			NO METER	RETROFIT
4424	62ND ST			NO METER	RETROFIT
4425	62ND ST			NO METER	RETROFIT
4428	62ND ST			NO METER	RETROFIT
4429	62ND ST			NO METER	RETROFIT
4434	62ND ST			NO METER	RETROFIT
4435	62ND ST			NO METER	RETROFIT
4438	62ND ST			NO METER	RETROFIT
4439	62ND ST	1.0	17'SNLL-6'EEC in s/p	NO METER	RETROFIT
4440	62ND ST			NO METER	RETROFIT
4441	62ND ST	1.0	33' SNLL - 14' WELL	NO METER	RETROFIT
4500	62ND ST			NO METER	RETROFIT
4501	62ND ST			NO METER	RETROFIT
4510	62ND ST			NO METER	RETROFIT
4511	62ND ST			NO METER	RETROFIT
4520	62ND ST			NO METER	RETROFIT
4521	62ND ST	1.0		NO METER	RETROFIT
4624	62ND ST			NO METER	RETROFIT
4625	62ND ST	1.0	16' WELL - 25' NSLL - 62nd Street	NO METER	RETROFIT
4628	62ND ST		2 1/2' EWPL of 4628 62nd Street - 27' NSLL of Address in Box	NO METER	RETROFIT
4629	62ND ST			NO METER	RETROFIT
4634	62ND ST			NO METER	RETROFIT
4635	62ND ST	1.0	26' SNLL - 13 NSPL - 26' EWLL	NO METER	RETROFIT
4738	62ND ST			NO METER	RETROFIT
4739	62ND ST			NO METER	RETROFIT
4740	62ND ST			NO METER	RETROFIT
4741	62ND ST			NO METER	RETROFIT
3901	63RD ST			NO METER	RETROFIT
3951	63RD ST	1.0	60' SNLL - 11' EEC in Standpipe, 35' NSC of 63rd Street	NO METER	RETROFIT
3961	63RD ST	1.0	Same as Corp & Behind Sidewalk	NO METER	RETROFIT
3963	63RD ST	1.0	20' EWLL -2' NNPL - 63rd Street	NO METER	RETROFIT
3967	63RD ST	1.0	11' EWLL of Lot #13 & Behind Sidewalk	NO METER	RETROFIT
3971	63RD ST	1.0	11' S of NELL & Behind Sidewalk	NO METER	RETROFIT

Colonia Heights (6M4)					
STREET_#	STREET_NAM	WS_TapSize	WS_CurbSto	(E) Mtr Status	(P) Work
3975	63RD ST	1.0	11' S of NLL & Behind Sidewalk	NO METER	RETROFIT
3981	63RD ST	1.0	12' EWLL, 5' SSC (In Sidewalk)	NO METER	RETROFIT
3987	63RD ST	1.0	Same as Corp & Behind Sidewalk	NO METER	RETROFIT
4001	63RD ST	1.0	C/S 11' EWC of 63rd, 2' NSLL in Standpipe	NO METER	RETROFIT
4022	63RD ST	1.0	Same as Corp Cock - 22' W of Main - at WPL 63rd Street	NO METER	RETROFIT
4027	63RD ST	1.0	32' E of Main - at EPL 63rd Street	NO METER	RETROFIT
4030	63RD ST	1.0	1 1/2' SNLL - Back of Curb	NO METER	RETROFIT
4040	63RD ST	1.0	1) 20' SNLL & 11' WWC of 63rd Street□□2) 58' SNLL & 11' WWC of 6	NO METER	RETROFIT
4042	63RD ST			NO METER	RETROFIT
4042	63RD ST	1.0	2' SNLL - 10 WWC - 63rd Street (under Asphalt) , (In Box)	NO METER	RETROFIT
4081	63RD ST	1.0	Same as Corp Cock - at EPL 63rd Street	NO METER	RETROFIT
4089	63RD ST	1.0	601' S of C/L 14th Avenue - 6' W of C/L 63rd Street	NO METER	RETROFIT
4090	63RD ST	1.0		NO METER	RETROFIT
4110	63RD ST	1.0	14' SNLL - 52' NSLL	NO METER	RETROFIT
4111	63RD ST	1.0	Same as Corp Cock - 2' EE Sidewalk 63rd Street	NO METER	RETROFIT
4140	63RD ST	1.0	Same & 1' WEPL	NO METER	RETROFIT
4141	63RD ST	1.0	21' SNLL - EPL - 63rd Street	NO METER	RETROFIT
4170	63RD ST	1.0	451' North of North PL of 18th Avenue, WPL of 63rd Street	NO METER	RETROFIT
4171	63RD ST	1.0	466' N C/L 18th Avenue - 6' W of C/L 63rd Street	NO METER	RETROFIT
4181	63RD ST	1.0	Same as Corp Cock - 32' E of Main - at EPL 63rd Street	NO METER	RETROFIT
4190	63RD ST	1.0	Same as Corp Cock - 6" WW Sidewalk 63rd Street	NO METER	RETROFIT
4230	63RD ST	1.0	14' SNLL - 58' NSLL - 1' WWPL of 63rd Street	NO METER	RETROFIT
4231	63RD ST	1.0	Same as Corp Cock - 31' E of Mains at EPL 63rd Street	NO METER	RETROFIT
4236	63RD ST	1.5	23' SNLL - 40' NSLL - 6" WWPL of 63rd Street	NO METER	RETROFIT
4252	63RD ST			NO METER	RETROFIT
4261	63RD ST			NO METER	RETROFIT
4261	63RD ST	2.0	1) 9' NSLL, 12' EEC (12/2/06)□□2) Same as Corp Cock - 61'6" NSLL,	NO METER	RETROFIT 2"
4270	63RD ST	1.0	1) 31' snll - 12' wwc in box (3/14/07)□□2) 31' snll - 11' wwc (3/9/07)□□	NO METER	RETROFIT
4271	63RD ST	1.0	EPL of 63rd Street	NO METER	RETROFIT
4280	63RD ST	1.0	1) 11.5' NSLL, 11' WWC in c/s box (2/22/06)□□2) same as Corp Cock	NO METER	RETROFIT
4295	63RD ST	1.0	1' WELL & on NPL 18th Avenue	NO METER	RETROFIT
4301	63RD ST	1.0	8' NSLL - 12' EEC 63rd Street	NO METER	RETROFIT
4321	63RD ST	1.0	Same as Corp Cock - 32' E of Main or at EPL 63rd Street	NO METER	RETROFIT
4351	63RD ST	1.0	Same as Corp Cock - 33' E of Main - at EPL 63rd Street	NO METER	RETROFIT
4360	63RD ST	1.5	66' SNLL - 3' WWC of 63rd Street	METERED	RETROFIT
4361	63RD ST	1.0	Same as Corp Cock - 33' E of Main at EPL 63rd Street	NO METER	RETROFIT
4391	63RD ST	1.0	40 1/2' SNLL & 25 1/2' NSLL & 1' EWPL of 63rd Street	NO METER	RETROFIT
4435	63RD ST	1.0	27' NSLL - EPL - 63rd Street	NO METER	RETROFIT
4475	63RD ST	1.0	60' N C/L Manley Ct - 6' W C/L 63rd Street	NO METER	RETROFIT

Colonia Heights (6M4)					
STREET_#	STREET_NAM	WS_TapSize	WS_CurbSto	(E) Mtr Status	(P) Work
4481	63RD ST	1.5	Same as Corp Cock - 18" WW Sidewalk of 63rd Street	NO METER	RETROFIT
4485	63RD ST	1.0	732' NNPL 21st Avenue, at EPL 63rd Street	NO METER	RETROFIT
4487	63RD ST	1.0	Same as Corp Cock - 20' SNLL, 1' EEPL 63rd Street (Sidewalk)	NO METER	RETROFIT
4535	63RD ST	1.0	1) 32' SNLL, 10' EWC in box (8/19/06)□□2) Same as Corp and at EPL	NO METER	RETROFIT
4555	63RD ST	1.0	Same as Corp Cock - at EPL 63rd Street	NO METER	RETROFIT
4575	63RD ST	1.0	49' S of N Lot Line and 6' N of S lot line	NO METER	RETROFIT
4595	63RD ST	1.0	73' 6" NSLL - 58' 6" SNLL - 1' EEPL of 63rd Street	NO METER	RETROFIT
4655	63RD ST	1.0	73' NSLL - 11' EEC 63rd Street in Standpipe	NO METER	RETROFIT
4660	63RD ST	2,1	2' WWC of 63rd, 28' NNC of Manley St	NO METER	RETROFIT (6) 1" & 2"
4670	63RD ST	1.0	22 1/2' NSLL - Back of Curb	NO METER	RETROFIT
4730	63RD ST	1.0	1) 10' WWC, 3' NSLL in box (5/23/05)□□2) Same as Corp Cock - 22' W	NO METER	RETROFIT
4750	63RD ST	1.0	51' 5" NSLL - 3' 5" SNLL - 21' W of Main	NO METER	RETROFIT
4751	63RD ST	1.0	Same as Corp Cock - 33' E of Main - 18" Back of Sidewalk or at EPL 6	NO METER	RETROFIT
4761	63RD ST	1.0	1) 35' nsll - 12' eec in SP (2/14/07)□□2) Same as Corp Cock - 32' E o/	NO METER	RETROFIT
4771	63RD ST	1.0	Same as Corp Cock - 46' SNLL, 6" EE Sidewalk, 63rd Street	NO METER	RETROFIT
4780	63RD ST			NO METER	RETROFIT
4791	63RD ST	1.0	30' WELL - 5' NNC of 21st Avenue	NO METER	RETROFIT
4831	63RD ST	1.5	Same, 6' EEC	NO METER	RETROFIT
5001	63RD ST	1.0	1) 36' NNC, 8' EEC in a box (6/1/05)□□2) 36' NNC 63rd Street (cul-de-	NO METER	RETROFIT
5009	63RD ST	1.0		NO METER	RETROFIT
5013	63RD ST	1.0		NO METER	RETROFIT
5017	63RD ST			NO METER	RETROFIT
5021	63RD ST			NO METER	RETROFIT
4820	64TH ST	1.0	14' NSLL - 6' WWC 64th Street	NO METER	RETROFIT
4830	64TH ST	1.0	24' SNLL - 5' WWC - 64th Street	NO METER	RETROFIT
4831	64TH ST	1.0	164' NSLL, 144' SNLL, 2' EEPL	NO METER	RETROFIT
4840	64TH ST	1.0	18' NSLL, 6' WWC of 4840 - 64th Street	NO METER	RETROFIT
4860	64TH ST	1.0	37'NSLL, 8'WWC 64th Street in S/P	NO METER	RETROFIT
4910	64TH ST	1.0	45' SNLL - 8' WWC of - 64th Street Standpipe Installed	NO METER	RETROFIT
4911	64TH ST	1.0	31' NSLL - 2' EEPL - 64th Street	NO METER	RETROFIT
4930	64TH ST	1.0	29' SNLL, 8' WWC in c/s box.	NO METER	RETROFIT
4934	64TH ST	1.0	9' SSPL & 34' NSLL - 6' WWC 64th Street (in □□Standpipe)	NO METER	RETROFIT
4950	64TH ST	1.0	53' NSLL - 4' WWC - 64th Street	NO METER	RETROFIT
4951	64TH ST	1.0	6' EEC - 6' NSLL	NO METER	RETROFIT
4971	64TH ST	1.0	3' SSLL, 7' BOW of 64th St	NO METER	RETROFIT
4973	64TH ST	1.0	27' NSLL, 7' EEPL, 64th St	NO METER	RETROFIT
4980	64TH ST	1.0	5' SNLL - 6' WELL	NO METER	RETROFIT
4981	64TH ST	1.0	38' NSLL, 10' SNLL, 5' EWC in box	NO METER	RETROFIT

Colonia Heights (6M4)					
STREET_#	STREET_NAM	WS_TapSize	WS_CurbSto	(E) Mtr Status	(P) Work
4990	64TH ST			NO METER	RETROFIT
4990	64TH ST	1.0	Same as Corp Cock - WPL 64th Street	NO METER	RETROFIT
4998	64TH ST	1.0	4' NSLL - 64' SNLL - 4' WWPL - 64th Street	NO METER	RETROFIT
5000	64TH ST	1.0	15' SNLL - 3' WWPL - 64th Street	NO METER	RETROFIT
5001	64TH ST	1.0	EPL of 64th Street - 38'6" N of SLL - 10'S of NLL	NO METER	RETROFIT
5010	64TH ST	1.0	WPL of 64th Street	NO METER	RETROFIT
5050	64TH ST	1.0	13' SNPL - 10' WWC	NO METER	RETROFIT
5117	64TH ST	1.0	1) 2' NNPL, 6' EEC in box(5/27/06)□□2) 5' NSLL - 3' EEPL - 64th Stre	NO METER	RETROFIT
5120	64TH ST	1.0	Same & 46' N of Front of House	NO METER	RETROFIT (8)
5131	64TH ST	1.0	1) 4' NSLL o/address - 6' EEC in c/s box (5/26/06)□□2) 40' NSLL, 7' E	NO METER	RETROFIT
5136	64TH ST	1.0	21' SNLL - 18' EWPL - 64th Street	NO METER	RETROFIT
5140	64TH ST	1.0	1) 26' snll - 5' wwc (4/19/07)□□2) Same as Corp Cock - 22' W of Main	NO METER	RETROFIT
5161	64TH ST	1.0	43' SNLL, 8' EEC in c/s box	NO METER	RETROFIT
5191	64TH ST	1.0	28'6' NSLL - 64' SNLL on EPL of 64th Street	NO METER	RETROFIT
5231	64TH ST	1.0	34' NSLL - 26' SNLL - 1' EEPL of 64th Street	NO METER	RETROFIT
5241	64TH ST	1.0	18' SNLL - 59' NSLL - EPL -64th Street	NO METER	RETROFIT
5307	64TH ST	1.0	1) 34' SNLL, 5' EEC 64th St. in box (5/21/05)□□2) 44' SNPL - EPL - 64	NO METER	RETROFIT
5311	64TH ST	1.0	72' SNLL - 12' EEC - 64th Street (In Standpipe)	NO METER	RETROFIT
5351	64TH ST	1.0	6' NSLL - 10' EEC of 64th Street in Standpipe	NO METER	RETROFIT
5361	64TH ST	1.0	Same & 7' EEC 64th Street in S/P	NO METER	RETROFIT
5401	64TH ST	1.0	26' SNLL - 70' NSLL 30' E of Main at ELL	NO METER	RETROFIT
5455	64TH ST	1.0	Same as Corp Cock - at EPL 64th Street	NO METER	RETROFIT
5511	64TH ST	1.0	Same as Corp Cock - 26' E of Main - at EPL 64th Street	NO METER	RETROFIT
5531	64TH ST	1.0	172' NNPL Fruitridge Rd, 39' SNLL, 1' WEPL 64th Street	NO METER	RETROFIT
5561	64TH ST	1.0	10' 6" SNLL - 37' 6" NSLL - 1' EEPL of 64th Street	NO METER	RETROFIT
5591	64TH ST	1.0	Same as Corp Cock - at EPL 64th Street	NO METER	RETROFIT
3904	65TH ST	1.0	SC of 14th Av	NO METER	RETROFIT
3905	65TH ST	1.0	49' EEC of 65th St, 8' SSC of 14th Av in box	NO METER	RETROFIT
3907	65TH ST	1.0	5' NSLL, 1' behind sidewalk	NO METER	RETROFIT
3908	65TH ST	1.0	6' WWC, 1' SNPL in driveway	NO METER	RETROFIT
3909	65TH ST	1.0	same as above, 30' E of main, at EPL of 65th St	NO METER	RETROFIT
3912	65TH ST	1.0	2' WEPL, 20'6" NSPL, 32' SNLL	NO METER	RETROFIT
3916	65TH ST	1.0	1' WWPL	NO METER	RETROFIT
3961	65TH ST	1.0	7'6" SS Curb line of 14th Av, on EPL of 65th St.	NO METER	RETROFIT
4000	65TH ST	1.0	same - 10'6" EWC of 65th St	NO METER	RETROFIT
4023	65TH ST	1.0	same as corp cock or 28' SNLL	NO METER	RETROFIT
4071	65TH ST	1.0	same & 13' NSC of Nielson Wy	NO METER	RETROFIT
4080	65TH ST	1.0	same - 11' WWC of 65th St	NO METER	RETROFIT
4088	65TH ST	1.0	same as corp cock - 22' W of main at WPL of 65th St	NO METER	RETROFIT

Colonia Heights (6M4)					
STREET_#	STREET_NAM	WS_TapSize	WS_CurbSto	(E) Mtr Status	(P) Work
4090	65TH ST	1.0	same as corp cock - 22' W of main, at WPL of 65th St	NO METER	RETROFIT
4091	65TH ST	1.0	1' SNLL, 10' EEC of 65th St	NO METER	RETROFIT
4101	65TH ST	1.0	15' NSLL, EPL of 65th St	NO METER	RETROFIT
4102	65TH ST	1.0	17 1/2' NSLL, on WPL of 65th St	NO METER	RETROFIT
4106	65TH ST	1.0	same as CC - 34' E of main at EPL of 65th St	NO METER	RETROFIT
4108	65TH ST	1.0	same as corp cock - 22' W of main or at WPL of 65th St	NO METER	RETROFIT
4111	65TH ST			NO METER	RETROFIT
4140	65TH ST	1.0	same as corp cock - 10" WW sidewalk of 65th St	NO METER	RETROFIT
4141	65TH ST	1.0	same as corp cock - at EPL of 65th St	NO METER	RETROFIT
4151	65TH ST	1.0	25' SNLL, 11' EEC of 65th St	NO METER	RETROFIT
4160	65TH ST	1.0	same as corp cock - at WPL of 65th St	NO METER	RETROFIT
4161	65TH ST	1.0	10' NSLL, 55' SNLL, 1' EEPL of 65th St	NO METER	RETROFIT
4170	65TH ST	1.0	same as corp cock - at WPL of 65th St	NO METER	RETROFIT
4171	65TH ST	1.5	same as corp cock - 18" EE sidewalk of 65th St	NO METER	RETROFIT
4190	65TH ST	1.0	on WPL of 65th St, 47' NSLL, 25' SNLL	NO METER	RETROFIT
4200	65TH ST	1.0	73' SNLL, 10' WWC of 65th St	NO METER	RETROFIT
4250	65TH ST			NO METER	RETROFIT
4264	65TH ST		32' NSLL, 12' WWC of 65th St	NO METER	RETROFIT
4281	65TH ST	1.0	38'6" NSLL, 14' SNLL, 1' EEPL of 65th St	NO METER	RETROFIT
4285	65TH ST	1.0	10' EEC on NPL in c/s box (06/13/07)	NO METER	RETROFIT
4290	65TH ST	1.0	SPLL - 53'6" WWPL of 65th St	NO METER	RETROFIT
4311	65TH ST	1.0	same as corp & at WPL of 65th St	NO METER	RETROFIT
4320	65TH ST	1.0	1) 28' NSLL - 10' SSC o/65th St. in c/s box (5/24/06)□□2) same as cor	NO METER	RETROFIT
4321	65TH ST	1.0	1) 6' NSLL - 12' EEC o/65th (4/17/06)□□2) same as corp - 33' E of ma	NO METER	RETROFIT
4340	65TH ST	1.0	same as corp - 22' W of main, at WPL of 65th St	NO METER	RETROFIT
4341	65TH ST	1.0	same as corp - at EPL of 65th St	NO METER	RETROFIT
4401	65TH ST	1.0	same as corp - 35' SNLL, 1' EE sidewalk of 65th St	NO METER	RETROFIT
4409	65TH ST	1.0	41' NSLL, 12' EEC	NO METER	RETROFIT
4410	65TH ST	1.0	31' SNLL, 29' NSLL, 12' WWC in standpipe	NO METER	RETROFIT
4420	65TH ST	1.0	W/V - 32' NSLL, 12' WWC	NO METER	RETROFIT
4441	65TH ST	1.0	5' W of C/L 65th St, 500' S C/L 18th Av	NO METER	RETROFIT
4461	65TH ST	1.0	19' SNLL, 10' EEC	NO METER	RETROFIT
4481	65TH ST	1.0	same as corp - 20" EE sidewalk of 65th St	NO METER	RETROFIT
4488	65TH ST			NO METER	RETROFIT
4488	65TH ST	1.0	19' SNLL, 1' WWPL of 65th St	NO METER	RETROFIT
4490	65TH ST	1.0	36' SNLL, 2' WWC of 65th St	NO METER	RETROFIT
4491	65TH ST	1.0	20' SNLL, 10' EEC	NO METER	RETROFIT
4496	65TH ST	1.0	1' WEPL, 32' SNLL, 33' NSLL	NO METER	RETROFIT
4500	65TH ST	1.0	58' NSLL, 7' SNLL at WPL o/65TH ST	NO METER	RETROFIT

Colonia Heights (6M4)					
STREET_#	STREET_NAM	WS_TapSize	WS_CurbSto	(E) Mtr Status	(P) Work
4501	65TH ST			NO METER	RETROFIT
4510	65TH ST	1.0	542' N C/L 21st Av, 5' W C/L 65th St	NO METER	RETROFIT
4575	65TH ST	1.0	9' NSLL, 38' SNLL, 1' WWPL of 65th St	NO METER	RETROFIT
4600	65TH ST	1.25,1.0	same as corp - 60' SNLL, 1' WW sidewalk of 65th St	NO METER	RETROFIT (2) 1" & 1½"
4601	65TH ST	1.5	same as corp & at EC of 65th St	NO METER	RETROFIT
4664	65TH ST	1.0	48' SNLL, 19' NSLL, 1.5' WWPL of 65th St	NO METER	RETROFIT
4700	65TH ST	1.0	same as corp - 22' W of main or at WPL of 65th St	NO METER	RETROFIT
4721	65TH ST	1.0	same & 1' SSC of 65th St	NO METER	RETROFIT
4760	65TH ST	1.0	13' NSLL, behind sidewalk	NO METER	RETROFIT
4761	65TH ST	1.0	144' N C/L 21st Av, 5' W C/L 65th St	NO METER	RETROFIT
4791	65TH ST	1.0	same - 1' NNPL of 21st Av	NO METER	RETROFIT
0	67TH ST			NO METER	RETROFIT
3905	67TH ST	1.0	Same EPL 67th Street	NO METER	RETROFIT
3920	67TH ST	1.0	47' WWPL 67th Street, 3' EWLL, on PL 14th Avenue	NO METER	RETROFIT
3960	67TH ST	1.0	56 1/2' SNLL - 10' WWC - 67th Street	NO METER	RETROFIT
3975	67TH ST	1.0	24' NSLL - 8' WWC - 67th Street	NO METER	RETROFIT
4001	67TH ST	1.0	25' SNLL - 12' EEC - 67th Street	NO METER	RETROFIT
4004	67TH ST	1.0	32'SNLL-11'WWC in S/P	NO METER	RETROFIT
4030	67TH ST	1.0	7'SNLL, 11'WWC of 67th St.	NO METER	RETROFIT
4031	67TH ST	1.0	Same as Corp Cock - 32' E of Main - at EPL 67th Street	NO METER	RETROFIT
4060	67TH ST	1.0	Same as Corp Cock - 31' E of Main at EPL 67th Street	NO METER	RETROFIT
4061	67TH ST	1.0	Same as Corp Cock - 31' E of Main - at EPL 67th Street	NO METER	RETROFIT
4081	67TH ST			NO METER	RETROFIT
4090	67TH ST	1.0	36' NSLL - 19' SNLL - 1' Back of Sidewalk	NO METER	RETROFIT
4100	67TH ST	1.0	33' NSLL - 2' WWPL - 67th Street in s/p	NO METER	RETROFIT
4101	67TH ST	1.0	2' SNLL - 12' EEC of 67th Street in S.P	NO METER	RETROFIT
4120	67TH ST	1.0	4.5' W C/L 67th Street - 234' C/L Kipping Way	NO METER	RETROFIT
4121	67TH ST	1.0	10' 6" EEC - 67th Street - 3' 6" SNLL	NO METER	RETROFIT
4131	67TH ST	1.25	61' NSLL & 19' WE Cb of 67th Street	NO METER	RETROFIT
4140	67TH ST	1.0	Same as Corp Cock 22' W of Main at WPL 67th Street	NO METER	RETROFIT
4141	67TH ST	1.0	15' NSLL - 15' EEC of 67th Street in Box	NO METER	RETROFIT
4160	67TH ST	1.0	22' West of Main at WPL of 67th Street	NO METER	RETROFIT
4161	67TH ST	1.0	18' SNLL - 11' EEC 67th Street	NO METER	RETROFIT
4181	67TH ST	1.0	1) 9' SNLL - 42' NSLL - 10' EEC (6/27/06)□□2) 9' SNLL - 42' NSLL - 1'	NO METER	RETROFIT
4191	67TH ST	1.0	35' SNLL & 25' NSLL	NO METER	RETROFIT
4200	67TH ST	1.0	76' NSLL - 54' SNLL - 1' WWC 67th Street in Standpipe in Drive Way	NO METER	RETROFIT
4231	67TH ST	1.0	52' SNLL & 17' NSLL & 19' WEC of 67th Street 1' EEC of 67th Street	NO METER	RETROFIT
4240	67TH ST	1.0	34'- 6" NSLL - 25'- 6" SNLL - 1 WEPL 67th Street	NO METER	RETROFIT

Colonia Heights (6M4)					
STREET_#	STREET_NAM	WS_TapSize	WS_CurbSto	(E) Mtr Status	(P) Work
4261	67TH ST	1.0	60' 6" SNLL - 1' EEPL 67th Street 60' 6" SNLL - 70' 6" NSLL - 1' EEPL	NO METER	RETROFIT
4270	67TH ST	1.0	22' SNLL - 11' WWC	NO METER	RETROFIT
4280	67TH ST	1.0	73' NNPL of 18th Avenue 10' N of SLL 15" WW Sidewalk of 67th Stree	NO METER	RETROFIT
4281	67TH ST			NO METER	RETROFIT
4290	67TH ST	1.0	56' WWC of 67th Street, 4' NNC of 18th Avenue	NO METER	RETROFIT
4291	67TH ST	1.0	9' SNLL, 1' EEC of 67th St	NO METER	RETROFIT
4300	67TH ST	1.0	45'NSLL, 11'WWC in c/s box	NO METER	RETROFIT
4306	67TH ST	1.0	Same as Corp Cock - at WPL 67th Street	NO METER	RETROFIT
4320	67TH ST	1.0	47' NSLL - 8' SNLL - 21' W of Main	NO METER	RETROFIT
4321	67TH ST	1.0	11' EEC 67th Street - 2 1/2' NSLL in Box	NO METER	RETROFIT
4341	67TH ST	1.0	11' SNLL - 64' NSLL - 3' EEC 67th Street	NO METER	RETROFIT
4371	67TH ST	1.0	Owners Wheel Valve 38' SNLL - 42' EEC - 67th Street, 17' SNLL - 2 El	NO METER	RETROFIT
4380	67TH ST	1.0	4' 6" SNLL - 47' 6" NSLL - 1'6" WWPL of 67th Street	NO METER	RETROFIT
4391	67TH ST	1.0	87' SSPL of 19th Avenue - 21' NSLL of 4391 - 67th Street	NO METER	RETROFIT
4405	67TH ST	1.0	Same as Corp Cock- 6" EE Sidewalk of 67th Street	NO METER	RETROFIT
4431	67TH ST	1.0	36' NSLL - 10 1/2' EEC	NO METER	RETROFIT
4440	67TH ST	1.0	20' W of Main at WPL of 67th Street	NO METER	RETROFIT
4450	67TH ST	1.0	1' W of WPL of 67th Street - 25' N of SLL	NO METER	RETROFIT
4461	67TH ST	1.0	Same as Corp Cock - at WPL 67th Street	NO METER	RETROFIT
4464	67TH ST	1.25	1' WEPL of 67th Street	NO METER	RETROFIT
4481	67TH ST	1.0	43' SNLL Back of Curb	NO METER	RETROFIT
4500	67TH ST	1.0	38' SNLL, 10' WWC or on WPL 67th St in box	NO METER	RETROFIT
4501	67TH ST	1.0	1) 8' EEC o/67th St - 2' NSLL (10/30/06)□□2) 1' EEPL of 67th Street	NO METER	RETROFIT
4520	67TH ST	1.0	37' NSLL - 11' WWC - 67th Street	NO METER	RETROFIT
4531	67TH ST	1.0	21' NSLL & 47' SNLL & 1' EEPL of 67th Street	NO METER	RETROFIT
4560	67TH ST	1.0	56' SNLL - 11' WWC - 67th Street	NO METER	RETROFIT
4561	67TH ST	1.0	21'6" N of SLL or 31' S of NLL	NO METER	RETROFIT
4591	67TH ST	1.0	Same as Corp Cock - 31' E of Main - at EPL 67th Street	NO METER	RETROFIT
4601	67TH ST	1.0	9' NSLL - 1' EWPL - 11' EWC of 67th Street in Box	NO METER	RETROFIT
4620	67TH ST	1.0	67' SNLL, 15' NSLL, 6' WWPL	NO METER	RETROFIT
4640	67TH ST	1.0	Same as Corp Cock - 31'6" NSLL, 2' WW Sidewalk 67th Street	NO METER	RETROFIT
4641	67TH ST	1.0	15' SNLL, 10' EEC of 67th St in c/s box	NO METER	RETROFIT
4675	67TH ST	1.0	18' NSLL & 10' EEC	NO METER	RETROFIT
4705	67TH ST	1.0	25' NSLL, 12' EEC in box	NO METER	RETROFIT
4720	67TH ST	1.0	2' W of WPL of 67th Street - 45' N of SLL - 21' S of NLL	NO METER	RETROFIT
4730	67TH ST	1.0	37' 6" NSLL - 28'6" SNLL - 6" WWPL of 67th Street	NO METER	RETROFIT
4732	67TH ST	1.0	10' nsll - 1' eec in tri-box (5/14/07)	NO METER	RETROFIT
4734	67TH ST			NO METER	RETROFIT
4736	67TH ST			NO METER	RETROFIT

Colonia Heights (6M4)					
STREET_#	STREET_NAM	WS_TapSize	WS_CurbSto	(E) Mtr Status	(P) Work
4740	67TH ST			NO METER	RETROFIT
4742	67TH ST			NO METER	RETROFIT
4744	67TH ST			NO METER	RETROFIT
4746	67TH ST			NO METER	RETROFIT
4748	67TH ST			NO METER	RETROFIT
4750	67TH ST			NO METER	RETROFIT
4752	67TH ST	2.0	141' NNC of 21st Avenue 11' EWC of 67th Street	NO METER	RETROFIT 2"
4754	67TH ST			NO METER	RETROFIT
4756	67TH ST			NO METER	RETROFIT
4757	67TH ST	1.0	13' SNLL, 11' EEC	NO METER	RETROFIT
4759	67TH ST	1.0	Same as Corp Cock - at WPL 67th Street	NO METER	RETROFIT
4760	67TH ST	1.0	Same & 1' WWC 67th Street	NO METER	RETROFIT
4270	67TH ST 1/2			NO METER	RETROFIT
3900	69TH ST	1.0	Same as Corp Cock - 16' W of Main, or at WPL 69th Street	NO METER	RETROFIT
3921	69TH ST	1.0	9' NSLL 142 SSPl of 14th Avenue on EPL of 69th Street	NO METER	RETROFIT
3930	69TH ST	1.0	Same as Corp Cock - 16' W of Main at WPL 69th Street	NO METER	RETROFIT
3931	69TH ST	1.0	68' SNLL -6" Back of Sidewalk - 69th Street	NO METER	RETROFIT
3950	69TH ST	1.5	69' SNLL - 6" BK of Sidewalk - 69th Street	NO METER	RETROFIT
3958	69TH ST			NO METER	RETROFIT
3970	69TH ST			NO METER	RETROFIT
3994	69TH ST	1.0	WPL of 69th Street	NO METER	RETROFIT
4001	69TH ST	1.0	Same as Corp Cock - at EPL 69th Street	NO METER	RETROFIT
4020	69TH ST	1.0	Same as Corp Cock - 16' W of Main at WPL 69th Street	NO METER	RETROFIT
4021	69TH ST	1.0	408'SSPL 14th Ave, 8'NSLL, 11'EEC of 69th St in □□c/s box	NO METER	RETROFIT
4050	69TH ST	1.0	Same as Corp Cock - at WPL 69th Street	NO METER	RETROFIT
4051	69TH ST	1.0	543' S of C/L 14th Avenue - 10' W of C/L 69th Street	NO METER	RETROFIT
4060	69TH ST	1.0	12' NSLL, 54'6" SNLL, 1' WWPL 69th	NO METER	RETROFIT
4091	69TH ST	1.0	39' SNLL, 61' NSLL, 11' EEC of 69th Street in Box	NO METER	RETROFIT
4100	69TH ST	1.0	Same as Corp Cock - W Sidewalk 69th Street	NO METER	RETROFIT
4110	69TH ST	1.0	19' NSLL - 47' SNLL - 1' W of Sidewalk	NO METER	RETROFIT
4120	69TH ST	1.0	30' SNLL behind Curb	NO METER	RETROFIT
4125	69TH ST	1.0	Same as Corp Cock - 4' SNLL, 1' EE Sidewalk 69th Street	NO METER	RETROFIT
4140	69TH ST	1.0	1) 10' WWC, 5' NSLL in box (5/23/05)□□2) Same as Corp Cock - 44' S	NO METER	RETROFIT
4185	69TH ST	1.0	41' SNLL, 31' NSLL, 10' EEC of 69th St in standpipe	NO METER	RETROFIT
4195	69TH ST	1.0	Same as Corp Cock - 13' NSLL, 1' EE Sidewalk 69th Street	NO METER	RETROFIT
4196	69TH ST	1.0	26' NSLL, 24' SNLL, on WPL 69th Street	NO METER	RETROFIT
4231	69TH ST	1.0	1' EWLL Back of Sidewalk	NO METER	RETROFIT
4234	69TH ST	1.0	1" WWPL of 69th Street	NO METER	RETROFIT
4235	69TH ST	1.0	22' NSLL - 48' SNLL -11' EEC - 69th Street	NO METER	RETROFIT

Colonia Heights (6M4)					
STREET_#	STREET_NAM	WS_TapSize	WS_CurbSto	(E) Mtr Status	(P) Work
4255	69TH ST	1.0	22' NSLL - 1' EEPL - 69th Street	NO METER	RETROFIT
4260	69TH ST	1.0	62' SSPL - Brady Ct - 3' WWLL - 2' SSLL	NO METER	RETROFIT
4261	69TH ST	1.0	9' SNLL, 11' EEC in box.	NO METER	RETROFIT
4300	69TH ST	1.0	28 1/2' NSLL- Behind Sidewalk	NO METER	RETROFIT
4310	69TH ST	1.0	Same as Corp Cock - 16' W of Main, at WPL 69th Street	NO METER	RETROFIT
4321	69TH ST	1.0	31' NSLL 29' SNLL 1' EEPL of 69th Street	NO METER	RETROFIT
4340	69TH ST	1.0	Same as Corp Cock - 54' NSLL, 16" WW Sidewalk 69 Street	NO METER	RETROFIT
4341	69TH ST	1.0	Same as Corp Cock - 41' 6" NSLL, 18" EEPL 69th Street (Sidewalk)	NO METER	RETROFIT
4369	69TH ST	1.0	46' SNLL- 5' Back of Sidewalk in Standpipe	NO METER	RETROFIT
4390	69TH ST	1.0	46' SNLL - 11' WWC - 69th Street	NO METER	RETROFIT
4400	69TH ST	1.0	431' SSPL o/18th Ave, 37' SNLL on WPL of 69th St □□(sidewalk)	NO METER	RETROFIT
4401	69TH ST	1.0	29' SNLL, 1' EEPL 69th Street	NO METER	RETROFIT
4431	69TH ST	1.0	37' E of Main at EPL of 69th Street	NO METER	RETROFIT
4461	69TH ST	1.0	512' S C/L 18th Avenue - 10' W C/L 69th Street	NO METER	RETROFIT
4480	69TH ST	1.0	28' NSLL - 11' WWC	NO METER	RETROFIT
4490	69TH ST	1.0	6' SNLL - 11' WWC - 69th Street	NO METER	RETROFIT
4491	69TH ST	1.0	23' SNLL - 2' EEC - 69th Street	NO METER	RETROFIT
4502	69TH ST	1.0	Same as Corp Cock - 18' W of Main at WPL - 69th Street	NO METER	RETROFIT
4505	69TH ST	1.0	7'6" NSLL - 109'6" SNLL - 1' EEPL of 69th Street	NO METER	RETROFIT
4512	69TH ST	1.0	16' W of Main at WPL of 69th Street	NO METER	RETROFIT
4560	69TH ST	1.0	50' NSLL - 15'6" SNLL - 1' WWPL of 69th Street	NO METER	RETROFIT
4561	69TH ST	1.0	37' E of Main - at EPL 69th Street	NO METER	RETROFIT
4565	69TH ST	1.0	Same as Corp Cock - 36' E of Main at EPL 69th Street	NO METER	RETROFIT
4590	69TH ST	1.0	11' SNLL - 54' NSLL	NO METER	RETROFIT
4600	69TH ST	1.0	37' SNLL, 1' Behind Sidewalk	NO METER	RETROFIT
4601	69TH ST	1.0	Same as Corp Cock - 17' SNPL of Lot, 6" EE Sidewalk 69th Street	NO METER	RETROFIT
4704	69TH ST	1.0	Same as Corp Cock - at WPL 69th Street	NO METER	RETROFIT
4750	69TH ST	1.0	Same as Corp Cock - 15' W of Main at WPL 69th Street	NO METER	RETROFIT
4755	69TH ST	1.0	18'SNLL, 11'EEPL of 69th St. in c/s Box	NO METER	RETROFIT
4760	69TH ST	1.0	Same as Corp Cock - at WPL 69th Street	NO METER	RETROFIT
4763	69TH ST	1.0	Same as Corp Cock - 37' E of Main - at EPL 69th Street	NO METER	RETROFIT
3930	71ST ST	1.0	15' W of Main at WPL of 71st Street	NO METER	RETROFIT
3931	71ST ST			NO METER	RETROFIT
3961	71ST ST			NO METER	RETROFIT
3980	71ST ST	1.0	15' W of Main at WPL of 71st Street	NO METER	RETROFIT
3990	71ST ST	1.0	2' NSLL - 12' WWC of 71st Installed Standpipe	NO METER	RETROFIT
3991	71ST ST	1.25	33' SNLL - 2' WWC of 71st Street in C/S Box	NO METER	RETROFIT
3996	71ST ST	1.0	38' NSLL - 20' SNLL - 14' EWPL of 71st Street	NO METER	RETROFIT
4000	71ST ST	1.0	Same - 2' WWPL - 71st Street	NO METER	RETROFIT (2)

Colonia Heights (6M4)					
STREET_#	STREET_NAM	WS_TapSize	WS_CurbSto	(E) Mtr Status	(P) Work
4001	71ST ST	1.0	16' NSLL, 60' SNLL,3'EEC of 71st Street in a s/p	NO METER	RETROFIT
4005	71ST ST	1.0	46' NSLL and 32' SNLL	NO METER	RETROFIT
4011	71ST ST	1.25	3 Services: 40' SNLL of 4011 71st Street - 1 1/4" Tap, 80' SNLL - of 40	NO METER	RETROFIT
4012	71ST ST		10' WWC, 24' NSPL of 4012	NO METER	RETROFIT
4025	71ST ST	1.0	560' S C/L 14th Avenue - 12' W C/L 1st Avenue	NO METER	RETROFIT
4033	71ST ST			NO METER	RETROFIT
4041	71ST ST			NO METER	RETROFIT
4060	71ST ST	1.0	11.5' WWC - 71st Street - 18' NSLL	NO METER	RETROFIT
4080	71ST ST	1.0	27' SNLL - 12' WWC - 71st Street	NO METER	RETROFIT
4140	71ST ST	1.0	555' N C/L 18th Avenue - 12' W C/L 71st Street	NO METER	RETROFIT
4150	71ST ST	1.0	Same & 6' WWC of 71st Street	NO METER	RETROFIT
4151	71ST ST	1.0	1) 17' snll - 13' eec in c/s box (5/23/07)□□2) 12' snll - 15' eec (4/5/07)□	NO METER	RETROFIT
4161	71ST ST	1.0	1) 17' SNLL, 13' EEC in box (06/24/07)□□2) 1' E of EPL of 71st Street	NO METER	RETROFIT
4164	71ST ST			NO METER	RETROFIT
4200	71ST ST	1.0	86' SNLL - 44' NSLL - 3.5' WW Edge of Sidewalk	NO METER	RETROFIT
4225	71ST ST			NO METER	RETROFIT
4225	71ST ST	1.0	16' SNLL - 59' NSLL - 1' EEPL of 71st Street	NO METER	RETROFIT
4232	71ST ST	1.0	12' SNLL - 1' W of Sidewalk	NO METER	RETROFIT
4255	71ST ST	1.0	23' SNLL - 10'EEC of 71st St in C/S box	NO METER	RETROFIT
4260	71ST ST	1.0	43' 6" NSLL - 23' 6" NSLL on WPL of 71st Street	NO METER	RETROFIT
4284	71ST ST	1.0	121' N C/L 18th Avenue - 12' W C/L 71st Street	NO METER	RETROFIT
4290	71ST ST	1.0	10'EWLL-6' NNC in s/p	NO METER	RETROFIT
4295	71ST ST	1.0	EPL of 71st Street	NO METER	RETROFIT
4297	71ST ST	1.0	28' SNLL - 6' NSLL - 6" EEPL of 71st Street	NO METER	RETROFIT
4300	71ST ST	1.0	Same as Corp Cock - at SPL 18th Avenue	NO METER	RETROFIT
4301	71ST ST	1.0	2' SNLL - 48' 6" NSLL? - 6" EEPL of 71st Street	NO METER	RETROFIT
4309	71ST ST	1.0	3' NSPL 18th Avenue, 37' SNPL of 18th Avenue, 1' EEPL of 71st Stree	NO METER	RETROFIT
4310	71ST ST	1.0	30' SNLL - 11' WWC 71st in Standpipe	NO METER	RETROFIT
4311	71ST ST	1.0	26' NSLL of 4315 71st St, 2' EEC of 71st St in box	NO METER	RETROFIT
4315	71ST ST	1.0	25' NSLL	NO METER	RETROFIT
4340	71ST ST	1.0	6.5' W C/L 71st Street - 306' S C/L 18th Avenue	NO METER	RETROFIT
4341	71ST ST	1.0	33' E of Main - EPL of 71st Street	NO METER	RETROFIT
4360	71ST ST	1.0	18' SNLL - 47' NSLL - 10' WWC - 71st Street	NO METER	RETROFIT
4381	71ST ST	1.0	18' NSLL - 12' EEC of 71st Street in S/P	NO METER	RETROFIT
4400	71ST ST	1,1	81' NSLL - 10' WWC of 71st Street	NO METER	RETROFIT (2)
4415	71ST ST	1.0	Same as Corp Cock - 24' SNLL, 6" EE Sidewalk 71st Street	NO METER	RETROFIT
4416	71ST ST	1.0	1) 11' SNLL - & 11' WWC (in Standpipe)(8/6/06)□□2) 11' SNLL - & 11	NO METER	RETROFIT
4420	71ST ST	1.0	1' WW Sidewalk of 71st Street	NO METER	RETROFIT
4455	71ST ST	1.0	on NPL - 10' EEC in S/P	NO METER	RETROFIT

Colonia Heights (6M4)					
STREET_#	STREET_NAM	WS_TapSize	WS_CurbSto	(E) Mtr Status	(P) Work
4460	71ST ST	1.0	Same as Corp Cock - 20' W of Main - at WPL 71st Street	NO METER	RETROFIT
4461	71ST ST	1.0	15' NSLL, 12' EEC of 71st Av in standpipe	NO METER	RETROFIT
4468	71ST ST		34' NSLL - 11' WWC - 71st Street	NO METER	RETROFIT
4500	71ST ST	1.0	Same as Corp Cock - at WPL 71st Street	NO METER	RETROFIT
4531	71ST ST	1.0	30' SNLL - 4' EEC - 71st Street	NO METER	RETROFIT
4555	71ST ST			NO METER	RETROFIT
4560	71ST ST	1.0	10' NSLL, 45' SNLL, 10' WWC in Box	NO METER	RETROFIT
4561	71ST ST	1.0	WPL - 15' SNLL - 71st Street	NO METER	RETROFIT
4567	71ST ST	1.0	Same as Corp Cock - at EPL 71st Street	NO METER	RETROFIT
4590	71ST ST	1.0	Same as Corp Cock - 80' SNLL, 6" WW Sidewalk 71st Street	NO METER	RETROFIT
4600	71ST ST	1.0	1) 32' NSLL, 11' WWC of 71st St. in box (12/20/05)□□2) 32' NSLL, 11'	NO METER	RETROFIT
4601	71ST ST	1.0	Same as Corp Cock - 32' E of Main - at EPL of Main - at EPL 71st Stre	NO METER	RETROFIT
4640	71ST ST	1.0	Same as Corp Cock - 6" WW Sidewalk of 71st Street	NO METER	RETROFIT
4680	71ST ST	1.0	Same as Corp Cock - 22' W of Main at WPL 71st Street	NO METER	RETROFIT
4720	71ST ST	1.0	28' N of SLL Back of Curb	NO METER	RETROFIT
4721	71ST ST	1.0		NO METER	RETROFIT
4740	71ST ST	1.0	Same as Corp Cock - 20' W of Main, at WPL 71 Street	NO METER	RETROFIT
4741	71ST ST	1.0	30' East of Main at EPL of 71st Street	NO METER	RETROFIT
4762	71ST ST	1.0	14' EWLL - 66' WWPL of 71st Street & on NPL of 21st Avenue	NO METER	RETROFIT
3900	73RD ST	1.0	Same & Back of Walk	NO METER	RETROFIT
3905	73RD ST			NO METER	RETROFIT
3940	73RD ST	1.0	Same & Back of Walk	NO METER	RETROFIT
3960	73RD ST	1.0	Same & Back of Walk	NO METER	RETROFIT
3980	73RD ST	1.0	Same & 7' WWC 73rd Street	NO METER	RETROFIT
3988	73RD ST			NO METER	RETROFIT
4011	73RD ST		Same - 5 1/2' EEC - 73rd Street	NO METER	RETROFIT
4019	73RD ST	1.0	Same & 7' EEC 73rd Street	NO METER	RETROFIT
4021	73RD ST	1.0	Same - 6' EEC 73rd Street	NO METER	RETROFIT
4023	73RD ST	1.0	1) 6' wwc - 20' snll in m/box (6/7/06)□□2) Same - 5 1/2' EEC - 73rd Str	NO METER	RETROFIT
4046	73RD ST			NO METER	RETROFIT
4050	73RD ST		Same - 6' WWC of 43rd	NO METER	RETROFIT
4078	73RD ST	1.0	1) 13' SNLL, 5' WWC IN BOX (2/11/07)□□2) Same - 5 1/2' WWC - 73r	NO METER	RETROFIT
4080	73RD ST	1.0	12'SNLL, 5'WWC of 73rd St in box	NO METER	RETROFIT
4082	73RD ST	1.0	Same - 5 1/2' WWC - 73rd Street	NO METER	RETROFIT
4100	73RD ST	1.0	27' SNLL - 25' NSLL & 15' EWPL of 73rd Street	NO METER	RETROFIT
4101	73RD ST	1.5	56' SNLL - 7' EEC 73rd Street	NO METER	RETROFIT
4115	73RD ST	1.0	Same & 6' EEC 73rd Street	NO METER	RETROFIT
4180	73RD ST	1.0	Same - 5 1/2' WWC 73rd Street	NO METER	RETROFIT
4200	73RD ST	1.0	Same - 14' EWC - 73rd Street	NO METER	RETROFIT

Colonia Heights (6M4)					
STREET_#	STREET_NAM	WS_TapSize	WS_CurbSto	(E) Mtr Status	(P) Work
4201	73RD ST	1.0	46' SNPL - 6' EEC - 73rd Street	NO METER	RETROFIT
4215	73RD ST	1.0	30' SNLL Under Dr. Way	NO METER	RETROFIT
4222	73RD ST			NO METER	RETROFIT
4222	73RD ST	1.0	Same - 6' WWC - 73rd Street	NO METER	RETROFIT
4224	73RD ST	1.0	Same - 6' WWC - 73rd Street	NO METER	RETROFIT
4260	73RD ST	1.0	Same - 6' WWC - 73rd Street	NO METER	RETROFIT
4291	73RD ST	1.0	36' SNLL, 7' EEC in C/S box	NO METER	RETROFIT
4294	73RD ST			NO METER	RETROFIT
4297	73RD ST	1.0	20' SNLL - 4 1/2' EEC - 73rd Street	NO METER	RETROFIT
4301	73RD ST	1.0	Same - 6' EEC - 73rd Street	NO METER	RETROFIT
4302	73RD ST	1.0	47' NSLL - 38' SNLL - 2' WWPL - 73rd Street	NO METER	RETROFIT
4308	73RD ST	1.0	43' NSLL 6' WWC in box	NO METER	RETROFIT
4311	73RD ST	1.0	Same & 5' EEC 73rd Street	NO METER	RETROFIT
4323	73RD ST	1.0	75' SNLL - 6' EEC - 73rd Street	NO METER	RETROFIT
4333	73RD ST	1.0	Same - 6' EEC - 73rd Street	NO METER	RETROFIT
4340	73RD ST	1.0	Same - 6' WWC - 73rd Street	NO METER	RETROFIT
4342	73RD ST	1.0		NO METER	RETROFIT
4343	73RD ST			NO METER	RETROFIT
4343	73RD ST	1.0	Same - 6' EEC - 73rd Street	NO METER	RETROFIT
4345	73RD ST	1.0	6' EEC - 24' SNLL	NO METER	RETROFIT
4349	73RD ST	1.0	14' SNLL, 7' EEC of 73rd Street in Standpipe Located in 16/3/45 73rd S	NO METER	RETROFIT
4353	73RD ST	1.0	11' SNLL 42' NSLL, 6' EEC of 73rd Street in SP	NO METER	RETROFIT
4360	73RD ST	1.0	23' NSLL - 6' WWC in C/S Box	NO METER	RETROFIT
4401	73RD ST	1.0	42' NSLL - 8' SNLL - 6' EEC of 73rd Street	NO METER	RETROFIT
4403	73RD ST	1.0	10' NSLL, 5' EEC of 73rd Street	NO METER	RETROFIT
4410	73RD ST	1.0	10' 1" EEPL of 73rd Street - - 23' SNLL - 10' 6" EEC 73rd Street	NO METER	RETROFIT
4415	73RD ST			NO METER	RETROFIT
4430	73RD ST	1.0	Same - 6' WWC - 73rd Street	NO METER	RETROFIT
4440	73RD ST	1.0	Same as Above & 6' 6" WWC in Box	NO METER	RETROFIT
4460	73RD ST	1.0	Same - 6' WWC 73rd Street	NO METER	RETROFIT
4500	73RD ST	1.0	Same - 6' WWC - 73rd Street	NO METER	RETROFIT
4560	73RD ST	1.0	Same - 6' WWC 73rd Street	NO METER	RETROFIT
4586	73RD ST			NO METER	RETROFIT
4590	73RD ST			NO METER	RETROFIT
4216	76TH ST	1.0	227' SSC of 17th Av, back of sidewalk in standpipe	NO METER	RETROFIT
4224	76TH ST	1.0	15' NSLL - 39' SNLL - 1' WWPL 76th Street	NO METER	RETROFIT
4232	76TH ST	1.0	1) 2' SNLL - 7' WWC in box (5/30/06)□□2) 2' SNLL, 3' WWPL 4230 76	NO METER	RETROFIT
4236	76TH ST		21' NSLL, 10' WWC	NO METER	RETROFIT
4240	76TH ST			NO METER	RETROFIT

Colonia Heights (6M4)					
STREET_#	STREET_NAM	WS_TapSize	WS_CurbSto	(E) Mtr Status	(P) Work
4320	76TH ST	1.0	19' NSLL & 37' SNLL - 9' EWPL of 76th Street	NO METER	RETROFIT
4324	76TH ST	1.0	51' SNLL, 29' NSLL, 5' WWC of 76th Street in S/P	NO METER	RETROFIT
4328	76TH ST	1.0	Same as Corp and at WPL 76th Street	NO METER	RETROFIT
4332	76TH ST	1.0	13' NS Lot Line and 32' SN Lot Line	NO METER	RETROFIT
4333	76TH ST	1.0	27' 6" SNLL - 5' 6" EEC 76th Street	NO METER	RETROFIT
4335	76TH ST	1.0	Same & 4' EEC 76th Street	NO METER	RETROFIT
4337	76TH ST	1.0	1) 3' NSLL, 5' EEC in C/S box (4/27/05)□□2) 4' NSLL, 38'SNLL, 5' EE	NO METER	RETROFIT
4400	76TH ST	1.0	2' SNLL - 38' NSLL at WPL 76th Street	NO METER	RETROFIT
4401	76TH ST	1.0	31' SNLL - 9' NSLL - 8' EEC 76th Street	NO METER	RETROFIT
4404	76TH ST	1.0	26' NSLL - 53' SNLL at WPL 76th Street	NO METER	RETROFIT
4405	76TH ST	1.0	Same & 6' EEC 76th Street	NO METER	RETROFIT
4408	76TH ST	1.0	Same as Corp and at WPL of 76th Street	NO METER	RETROFIT
4409	76TH ST	1.0	5' EEC 3' NSLL in C/S box	NO METER	RETROFIT
4412	76TH ST	1.0	2' NSLL & 38' SNLL - 8' EWPL of 79th Street	NO METER	RETROFIT
4413	76TH ST	1.0	11'SNLL- 7' EEC in box	NO METER	RETROFIT
4416	76TH ST	1.0	54' NSLL - 2' SNLL - 6' WWC in Box	NO METER	RETROFIT
4417	76TH ST	1.0	28' NSLL - 8' EEC 76th Street	NO METER	RETROFIT
4421	76TH ST	1.0	Same & 6' EEC 76th Street	NO METER	RETROFIT
4424	76TH ST	1.0	21' S of NLL - 7' W of WC - 76th Street	NO METER	RETROFIT
4425	76TH ST	1.0	Same & 5' EEC 76th Street	NO METER	RETROFIT
4426	76TH ST	1.0	5' NSLL - 35' SNLL - 1' WWPL 76th Street	NO METER	RETROFIT
4500	76TH ST	1.0	34.3' NSLL Behind Curb	NO METER	RETROFIT
4501	76TH ST	1.0	36' SNLL 223' NSLL, Behind Curb - 8' EEC	NO METER	RETROFIT
4530	76TH ST	1.0	32.8' NSLL, Behind Curb	NO METER	RETROFIT
4531	76TH ST	1.0	11' NSLL, 5' EEC of 4531 76th Street	NO METER	RETROFIT
4550	76TH ST	1.0	25.2' NSLL, Behind Curb	NO METER	RETROFIT
4551	76TH ST	1.0	41.5' SNLL, Behind Walk	NO METER	RETROFIT
4570	76TH ST	1.0	41.5' SNLL, Behind Curb	NO METER	RETROFIT
4571	76TH ST	1.0	14.3' SNLL, Behind Curb	NO METER	RETROFIT
4591	76TH ST	1.0	16.4' SNLL, Behind Walk	NO METER	RETROFIT
4600	76TH ST	1.0	34' NSLL, Behind Walk	NO METER	RETROFIT
4630	76TH ST	1.0	34.1' NSLL, Behind Walk	NO METER	RETROFIT
4631	76TH ST	1.0	34' NSLL, Behind Walk	NO METER	RETROFIT
4660	76TH ST	1.0	18.9' SNLL Behind Walk	NO METER	RETROFIT
4661	76TH ST	1.0	32' SNLL Behind Walk	NO METER	RETROFIT
4201	77TH ST	1.0	45'- 6" NSLL - 75'- 6" SNPL - 1' Behind Walk in S/P	NO METER	RETROFIT
4211	77TH ST	1.0	26' NSLL - 7' EEC in box	NO METER	RETROFIT
4221	77TH ST	1.0	44' NSLL - 16' SNLL - 1' EECL - 77th Street	NO METER	RETROFIT
4224	77TH ST	1.0	1 1/2' NSLL - 9 WWC - 77th Street	NO METER	RETROFIT

Colonia Heights (6M4)					
STREET_#	STREET_NAM	WS_TapSize	WS_CurbSto	(E) Mtr Status	(P) Work
4228	77TH ST	1.0	5' NSLL - 6' WWC	NO METER	RETROFIT
4232	77TH ST	1.0	41' NSLL - 6' WWC 77th Street	NO METER	RETROFIT
4241	77TH ST	1.0	38' NSLL - 64' SNLL - 2' EWPL - 77th Street	NO METER	RETROFIT
4248	77TH ST			NO METER	RETROFIT
4310	77TH ST	1.0	Same & 6' SSC 18th Avenue	NO METER	RETROFIT
4311	77TH ST			NO METER	RETROFIT
4321	77TH ST	1.0	14'NSLL, 32'SNLL, 30'WEPL, 5'EEC of 77th St.	NO METER	RETROFIT
4324	77TH ST	1.0	1) 33' NSLL, 7' WWC in s/p (8/12/05)□□2) 33' NSLL - 6' WWC in C/S E	NO METER	RETROFIT
4331	77TH ST	1.0	Same - 2' EWPL 77th Street	NO METER	RETROFIT
4401	77TH ST	1.0	16' SNLL - 9' EEC - 77th Street	NO METER	RETROFIT
4407	77TH ST	1.0	15'NSLL, 30'SNLL, 31'WEPL, 8'EEC of 77th St. in box	NO METER	RETROFIT
4419	77TH ST	1.0	Same - 2' EWPL - 77th Street	NO METER	RETROFIT
4423	77TH ST	1.0	6' SNLL - 38' NSLL - 2' EWPL - 77th Street	NO METER	RETROFIT
4425	77TH ST	1.0	Same - 1' EWPL - 77th Street	NO METER	RETROFIT
4435	77TH ST	1.0	6' EEC & 5' NSLL in Standpipe	NO METER	RETROFIT
4436	77TH ST	1.0	67' NSLL-84' SNLL- 1' WEPL - 77th Street	NO METER	RETROFIT (2)
4439	77TH ST	1.0	3' SNLL - 6' EEC 77th Street	NO METER	RETROFIT
4449	77TH ST	1.0	16' WELL & 83' EEPL of 77th Street & 8' SNPL Marin Avenue	NO METER	RETROFIT
4500	77TH ST	1.0	33' SSC of Main - 10' WWC	NO METER	RETROFIT
4501	77TH ST	1.0	Same - 8' EEC - 77th Street	NO METER	RETROFIT
4530	77TH ST	1.0	31 1/2'NSLL,Back of Walk	NO METER	RETROFIT
4531	77TH ST	1.0	Same & Back of Walk	NO METER	RETROFIT
4560	77TH ST	1.0	Same & Back of Walk	NO METER	RETROFIT
4561	77TH ST	1.0	Same & Back of Walk	NO METER	RETROFIT
4590	77TH ST	1.0	Same & Back of Walk	NO METER	RETROFIT
4591	77TH ST	1.0	Same & Back of Walk	NO METER	RETROFIT
4600	77TH ST	1.0	Same & Back of Walk	NO METER	RETROFIT
4601	77TH ST	1.0	Same & Back of Walk	NO METER	RETROFIT
4650	77TH ST	1.0	Same & Back of Walk	NO METER	RETROFIT
4651	77TH ST	1.0	Same & Back of Walk	NO METER	RETROFIT
4690	77TH ST	1.0	Same & Back of Walk	NO METER	RETROFIT
4691	77TH ST	1.0	60' NNC - 20th Avenue - 6' EEC - 77th Street	NO METER	RETROFIT
4311	78TH ST	1.0	8' SSC of 18th Ave- 77' EEc of 78th St	NO METER	RETROFIT
4319	78TH ST	1.0	22' NSLL - 1' EEPL - 78th Street	NO METER	RETROFIT
4320	78TH ST	1.0	37' SNPL of Lot	NO METER	RETROFIT
4321	78TH ST	1.0	1' SNLL - 45' NSLL - 1' EEPL - 78th Street - 1' EWPL	NO METER	RETROFIT
4330	78TH ST	1.0	16' NSLL - 2' WWPL - 78th Street	NO METER	RETROFIT
4400	78TH ST	1.0	59' NSLL - 35' SNLL - 1' WWPL - 78th Street	NO METER	RETROFIT
4401	78TH ST	1.0	Same & 6' EEC 78th Street in box.	NO METER	RETROFIT

Colonia Heights (6M4)					
STREET_#	STREET_NAM	WS_TapSize	WS_CurbSto	(E) Mtr Status	(P) Work
4406	78TH ST	1.0	7' WWC 78th Street - Same	NO METER	RETROFIT
4407	78TH ST	1.0	1) 39' SNLL, 6' EEPL of 78th St. in box (3/27/06)□□2) 39'SNLL, 6' EEF	NO METER	RETROFIT
4412	78TH ST	1.0	1) 7' nsll - 2' wwc o/78th St. (08/16/06)□□2) Same - 5' WWC 48th Stre	NO METER	RETROFIT
4418	78TH ST	1.0	18' NSLL - 30' SNLL - 2' WWPL - 78th Street	NO METER	RETROFIT
4421	78TH ST			NO METER	RETROFIT
4421	78TH ST	1.0	18' NSLL - 2' EEPL - 78th Street	NO METER	RETROFIT
4424	78TH ST	1.0	8' NSLL - 42' SNLL - 1' WWPL - 78th Street	NO METER	RETROFIT
4429	78TH ST	1.0	Same & 5' EEC 78th Street	NO METER	RETROFIT
4430	78TH ST	1.0	35' SNLL - 11' NSLL - 7' WWC in a box	NO METER	RETROFIT
4436	78TH ST	1.0	1) 9' NSLL, 1' WWC IN @ M/B (11/16/06)□□2) 11' NSLL - 35' SNLL - 2	NO METER	RETROFIT
4448	78TH ST	1.0	13' SNLL - 54' NSLL - 1' WWPL - 78th Street	NO METER	RETROFIT
4449	78TH ST	1.0	12' SNLL - 6' EEC of 78th Street in Meter Box	NO METER	RETROFIT
4453	78TH ST	1.0	25' EEC 78th Street - 37' WELL - 5 1/2' NNC Marin	NO METER	RETROFIT
4500	78TH ST	1.0	Same & Back of Walk	NO METER	RETROFIT
4501	78TH ST	1.0	Same- 5' SSC - Marin Avenue	NO METER	RETROFIT
4530	78TH ST	1.0	Same & Back of Walk	NO METER	RETROFIT
4531	78TH ST	1.0	16' SNLL - 34' NSLL - 6' EEC 78th Street	NO METER	RETROFIT
4560	78TH ST	1.0	1) 28 1/2' NSLL @ BACK O/WALK (3/4/07)□□2) 21' snll - 8' wwc in bo	NO METER	RETROFIT
4561	78TH ST	1.0	Same & 6' EEC 78th Street in box	NO METER	RETROFIT
4590	78TH ST	1.0	Same & Back of Walk	NO METER	RETROFIT
4591	78TH ST	1.0	Same & 6' EEC 78th Street	NO METER	RETROFIT
4600	78TH ST	1.0	Same & Back of Walk	NO METER	RETROFIT
4601	78TH ST	1.0	Same & 6' EEC 78th Street	NO METER	RETROFIT
4650	78TH ST	1.0	Same & Back of Walk	NO METER	RETROFIT
4651	78TH ST	1.0	Same 6' EEC 78th Street	NO METER	RETROFIT
4690	78TH ST	1.0	12' SNLL, 8' WWC, In Standpipe	NO METER	RETROFIT
4691	78TH ST	1.0	Same & 7 EEC 78th Street 6' SNLL	NO METER	RETROFIT
4311	79TH ST	1.0	10' NSLL - 3' behind sidewalk	NO METER	RETROFIT
4320	79TH ST	1.0	24' SNLL - 22' NSLL - 2' WWPL - 79th Street	NO METER	RETROFIT
4321	79TH ST	1.0	14' NSLL - 32' SNLL - 1' EEPL - 79th Street	NO METER	RETROFIT
4330	79TH ST	1.0	11' NSLL - 5' WWC - 79th Street	NO METER	RETROFIT
4400	79TH ST	1.0	18' SNLL - 6' WWC 79th Street	NO METER	RETROFIT
4403	79TH ST			NO METER	RETROFIT
4406	79TH ST	1.0	7' WWC of 79th, 36' SNLL	NO METER	SERVICE
4407	79TH ST			NO METER	RETROFIT
4411	79TH ST		22' NSLL 5' EEC in Box	NO METER	SERVICE
4412	79TH ST	1.0	31' SNLL - 1' WWPL - 79th Street	NO METER	RETROFIT
4418	79TH ST	1.0	6'WWC of 79th, 7' NSLL in c/s box	NO METER	RETROFIT
4419	79TH ST	1.0	Same & 1' EEC 79th Street	NO METER	RETROFIT

Colonia Heights (6M4)					
STREET_#	STREET_NAM	WS_TapSize	WS_CurbSto	(E) Mtr Status	(P) Work
4424	79TH ST	1.0	3' NSLL - 46' SNLL - 1' WWPL - 79th Street, Back of Sidewalk	NO METER	RETROFIT
4425	79TH ST	1.0	Same & 5' EEC 79th Street	NO METER	RETROFIT
4430	79TH ST	1.0	19' NSLL - 27' SNLL - 3' WWPL - 79th Street	NO METER	RETROFIT
4431	79TH ST	1.0	Same & 6' EEC 79th Street	NO METER	RETROFIT
4436	79TH ST	1.0	22' NSLL - 26' SNLL - 2' WWPL - 79th Street	NO METER	RETROFIT
4437	79TH ST	1.0	Same & 5' EEC 79th Street	NO METER	RETROFIT
4443	79TH ST	1.0	3' SNLL, 6' EEC of 79th Street	NO METER	RETROFIT
4446	79TH ST	1.0	11' SNLL - Back of Walk, Under Concrete No Access to C/S	NO METER	RETROFIT
4447	79TH ST	1.0	12' NSLL - 5' WEC C/S Box	NO METER	RETROFIT
4448	79TH ST	1.0	57' NNC Marin Avenue - 6' WWC 79th Street	NO METER	RETROFIT
4453	79TH ST	1.0	17' SNLL - 1' EEPL 79th Street	NO METER	RETROFIT
4454	79TH ST	1.0	71' WWC 79th Street - 40' EWLL - 5' NNC Marin	NO METER	RETROFIT
4550	79TH ST	1.0	Same & Back of Walk	NO METER	RETROFIT
4600	79TH ST	1.0	Same & Back of Walk	NO METER	RETROFIT
4601	79TH ST	1.0	Same & Back of Walk	NO METER	RETROFIT
4630	79TH ST	1.0	7' WWC - 79th Street - 34' NSLL	NO METER	RETROFIT
4631	79TH ST	1.0	Same & Back of Walk	NO METER	RETROFIT
4650	79TH ST	1.0	Same & Back of Walk	NO METER	RETROFIT
4651	79TH ST	1.0	Same & Back of Walk	NO METER	RETROFIT
4670	79TH ST	1.0	Same & Back of Walk	NO METER	RETROFIT
4671	79TH ST	1.0	17' SNLL - 6' EEC	NO METER	RETROFIT
4691	79TH ST	1.0	15' SNLL - 6' EEC o/79th St in box (8/4/06)	NO METER	RETROFIT
4701	79TH ST	1.0	19' SNLL 0f 4709 79th Street, 7' EEC of 79th Street (in S/P)	NO METER	RETROFIT
4711	79TH ST	1.0	Same & Back of Walk	NO METER	RETROFIT
4720	79TH ST	1.0	Same & Back of Walk	NO METER	RETROFIT
4721	79TH ST	1.0	Same & Back of Walk	NO METER	RETROFIT
4740	79TH ST	1.0	Same & Back of Walk	NO METER	RETROFIT
4741	79TH ST	1.0	Same & Back of Walk	NO METER	RETROFIT
3915	82ND ST			NO METER	RETROFIT
0	ABBEY RD			NO METER	RETROFIT
0	ABBEY RD			NO METER	RETROFIT
3983	ABBEY RD			NO METER	RETROFIT
3983	ABBEY RD			NO METER	RETROFIT
3983	ABBEY RD			NO METER	RETROFIT
8250	ALPINE AV			NO METER	RETROFIT
7917	AMADOR AV	1.0	3' NSPL of 7917 Amador Ave	NO METER	RETROFIT
7921	AMADOR AV			NO METER	SERVICE
7925	AMADOR AV			NO METER	RETROFIT
7926	AMADOR AV	1.0	11' EWLL, NPL	NO METER	RETROFIT

Colonia Heights (6M4)					
STREET_#	STREET_NAM	WS_TapSize	WS_CurbSto	(E) Mtr Status	(P) Work
7933	AMADOR AV			NO METER	RETROFIT
7936	AMADOR AV			NO METER	RETROFIT
7937	AMADOR AV			NO METER	RETROFIT
7942	AMADOR AV			NO METER	RETROFIT
7948	AMADOR AV			NO METER	RETROFIT
8004	AMADOR AV			NO METER	RETROFIT
8010	AMADOR AV			NO METER	RETROFIT
8010	AMADOR AV			NO METER	RETROFIT
4751	ANTONIA CT	1.0	7' SNLL, WPL of Antonia Court	NO METER	RETROFIT
4752	ANTONIA CT	1.0	17' NSLL, 35' E of garage door	NO METER	RETROFIT
4756	ANTONIA CT	0.75	32'WWC of Antonia - 66'EWLL-6' NNC of 21st Ave in c/s box	NO METER	RETROFIT
4760	ANTONIA CT	1.0	14' 6" NSLL, 25' 6" SNLL, 2' EWLL	NO METER	RETROFIT
4761	ANTONIA CT	1.0	7' SNLL, 55' NSLL, 2' WELL	NO METER	RETROFIT
0	BELVEDERE AV			NO METER	RETROFIT
8233	BELVEDERE AV	1.0	124' EWLL, 30' NNPL of Belvedere Av	NO METER	RETROFIT
6758	BENDER CT	1.25	13' EWLL 12' 6" WELL, 1' NNPL of Bender Court	NO METER	RETROFIT
6759	BENDER CT	1.25	16' 6" EWLL. 17' 6" WELL. 1' NNPL of Bender Court	NO METER	RETROFIT
6764	BENDER CT	1.25	14' 6" NSLL 16' SNLL, 1' WWPL of Bender Court	NO METER	RETROFIT
6765	BENDER CT	1.25	17' NSLL - 5' EEC of Bender Ct	NO METER	RETROFIT
6772	BENDER CT	1.25	22' NSLL, 20' SNLL, 1' WWPL, of Bender Ct	NO METER	RETROFIT
6777	BENDER CT	1.0	29' NSLL - 2 1/2' Behind sidewalk in Standpipe	NO METER	RETROFIT
6778	BENDER CT	1.0	27' NSLL - 3' WEPL of Lot	NO METER	RETROFIT
6783	BENDER CT	1.25	28' 6" SNLL, 28' NSLL. 1' EEPL of Bender Ct	NO METER	RETROFIT
6784	BENDER CT	1.25	25' 6" NSLL, 20' 6" SNLL, 1' WWPL of Bender Ct	NO METER	RETROFIT
6789	BENDER CT	1.0	28' SNLL - 7' EEC of Bender Ct	NO METER	RETROFIT
6792	BENDER CT	1.25	33' NSLL - 33' SNLL - 1' WWPL of Bender Ct	NO METER	RETROFIT
6795	BENDER CT	1.25	28' 6" NSLL, 28' SNLL. 1' EEPL of Bender Ct	NO METER	RETROFIT
6800	BENDER CT	1.25	33' NSLL - 33' SNLL - 1' WWPL of Bender Ct	NO METER	RETROFIT
6801	BENDER CT	1.25	28' 6" SNLL, 28' NSLL, 1' EEPL of Bender Ct	NO METER	RETROFIT
6806	BENDER CT	1.25	33' 6" NSLL - 32' 6" SNLL - 1' WWPL of Bender Ct	NO METER	RETROFIT
6807	BENDER CT	1.25	28' 6" SNLL, 28' NSLL, 1' EEPL of Bender Ct	NO METER	RETROFIT
6812	BENDER CT	1.0	32 1/2' SNLL - 3' WEPL of Lot	NO METER	RETROFIT
6813	BENDER CT	1.25	28' NSLL, 28' SNLL. & on EPL. of Bender Ct	NO METER	RETROFIT
6818	BENDER CT	1.25	33' NSLL, 33' SNLL, 1' WWPL of Bender Ct	NO METER	RETROFIT
6819	BENDER CT	1.25	33' NSLL, 33' SNLL & on EPL of Bander Court	NO METER	RETROFIT
6824	BENDER CT	1.25	32' 6" NSLL, 32' 6" SNLL, 1' WWPL of Bender Ct	NO METER	RETROFIT
6825	BENDER CT	1.25	34' NSLL - 6' EWC	NO METER	RETROFIT
6830	BENDER CT	1.25	33' SNLL, 33' NSLL, 1' WWPL of Bender Ct	NO METER	RETROFIT
6831	BENDER CT	1.25	32' NSLL, 34' SNLL & on EPL. of Bender Court	NO METER	RETROFIT

Colonia Heights (6M4)					
STREET_#	STREET_NAM	WS_TapSize	WS_CurbSto	(E) Mtr Status	(P) Work
6836	BENDER CT	1.25	33' SNLL, 33' NSLL, 1' WWPL of Bender Ct	NO METER	RETROFIT
6837	BENDER CT	1.25	32' NSLL, 34' SNLL & On EPL, of Bender Ct	NO METER	RETROFIT
6842	BENDER CT		29' SNLL - 5' WWC of Bender Ct	NO METER	RETROFIT
6843	BENDER CT	1.0	27' NSLL, 29' SNLL & on EPL of Bender Ct	NO METER	RETROFIT
6848	BENDER CT	1.25	29' NSLL, 26' SNLL, 8' WWC of Bender Ct in box.	NO METER	RETROFIT
6854	BENDER CT	1.25	19' 6" SNLL, 1' WWP of Bender Ct	NO METER	RETROFIT
6860	BENDER CT	1.25	17' WELL, 6' EWPL of Bender Ct (N) & on SPL of Bender Ct	NO METER	RETROFIT
6866	BENDER CT	1.25	20' WELL, - 20' EWLL & on SPL, of Bender Ct	NO METER	RETROFIT
6872	BENDER CT	1.0	1) 28' EWLL, 32' EWLL, 6' SSC of Bender (3/16/06)□□2) 28' WELL, 6'	NO METER	RETROFIT
6873	BENDER CT			NO METER	RETROFIT
6878	BENDER CT	1.0	26' EWLL, 29' WELL & On SPL of Bender Ct	NO METER	RETROFIT
6879	BENDER CT	1.0	30' EWLL, 25' WELL, 6' NNC of Bender Ct in standpipe	NO METER	RETROFIT
6884	BENDER CT	1.0	27' EWLL, 28' WELL & on SPL of Bender Ct	NO METER	RETROFIT
6890	BENDER CT	1.25	1) 58' ewll on spl of Bender Ct. (3/14/07)□□2) 58' EWLL - 62' WWPL o	NO METER	RETROFIT
6891	BENDER CT	1.25	77' WWPL, of 69th St, 80' EWLL & on NPL of Bender Ct	NO METER	RETROFIT
4500	BRADFORD DR	1.0	65 WWC of Bradford - 7' NNC of Marin	NO METER	RETROFIT
4501	BRADFORD DR	1.0	Same & Back of Walk	NO METER	RETROFIT
4530	BRADFORD DR	1.0	Same & Back of Walk	NO METER	RETROFIT
4531	BRADFORD DR	1.0	Same & Back of Walk	NO METER	RETROFIT
4560	BRADFORD DR	1.0	Same & Back of Walk	NO METER	RETROFIT
4561	BRADFORD DR	1.0	C/S 20' NSLL, 7' EEC	NO METER	RETROFIT
4590	BRADFORD DR	1.0	Same & Back of Walk	NO METER	RETROFIT
4591	BRADFORD DR	1.0	Same & Back of Walk	NO METER	RETROFIT
4600	BRADFORD DR	1.0	Same & Back of Walk	NO METER	RETROFIT
4601	BRADFORD DR	1.0	Same & Back of Walk	NO METER	RETROFIT
4650	BRADFORD DR	1.0	Same & Back of Walk	NO METER	RETROFIT
4651	BRADFORD DR	1.0	17 1/2' SNLL - 6 1/2' EEC of Bradford Drive in Standpipe	NO METER	RETROFIT
4690	BRADFORD DR	1.0	Same & Back of Walk	NO METER	RETROFIT
4691	BRADFORD DR	1.0	Same & Back of Walk	NO METER	RETROFIT
100	BRADY CT	1.0	51' EWLL - 6' SSC of Brady Court	NO METER	RETROFIT
101	BRADY CT	1.0		NO METER	RETROFIT
110	BRADY CT	1.0	32 1/2' WEPL of Lot	NO METER	RETROFIT
111	BRADY CT	1.0	1) 38' WELL, 22' EWLL, 2' NNPL of Brady (8/10/05)	NO METER	RETROFIT
120	BRADY CT	1.0		NO METER	RETROFIT
121	BRADY CT	1.0		NO METER	RETROFIT
130	BRADY CT	1.0		NO METER	RETROFIT
131	BRADY CT	1.0	27' NNC & 7' EEC	NO METER	RETROFIT
140	BRADY CT	1.0	23' EWLL -7' SSC under sod. 21' WELL. In standpipe	NO METER	RETROFIT
142	BRADY CT	1.0	Same as Corp and Behind Sidewalk	NO METER	RETROFIT

Colonia Heights (6M4)					
STREET_#	STREET_NAM	WS_TapSize	WS_CurbSto	(E) Mtr Status	(P) Work
144	BRADY CT	1.0	Same as Corp and Behind Sidewalk	NO METER	RETROFIT
146	BRADY CT	1.0	29 1/2' EWLL - 6' SSC Brady Court (Under Exposed Aggregate drivew	NO METER	RETROFIT
148	BRADY CT	1.0	27' EWLL, 17' WELL, 5' SSC	NO METER	RETROFIT
150	BRADY CT	1.0		NO METER	SERVICE
152	BRADY CT	1.0	20' WELL, 4' NNC of Brady Court	NO METER	RETROFIT
154	BRADY CT	1.0	28' WELL, 21' SNPL, 9' NNC of Brady Ct in box	NO METER	RETROFIT
156	BRADY CT	1.0		NO METER	RETROFIT
180	BRADY CT	1.0	30' SNLL, 6' WWC of Brady Court (In Standpipe)	NO METER	RETROFIT
181	BRADY CT			NO METER	RETROFIT
189	BRADY CT	1.0		NO METER	RETROFIT
190	BRADY CT	1.0	39' NSLL - Back of walk	NO METER	RETROFIT
193	BRADY CT	1.0		NO METER	RETROFIT
197	BRADY CT	1.0		NO METER	RETROFIT
201	BRADY CT	1.0		NO METER	RETROFIT
220	BRADY CT		30' EWLL - 6' SSC of Brady Court	NO METER	RETROFIT
221	BRADY CT	1.0	1) 38' eec o/Brady - 6' nnc o/Brady in c/s box (5/7/07)□□2) 35' EWPL -	NO METER	RETROFIT
228	BRADY CT	1.0		NO METER	RETROFIT
230	BRADY CT	1.0	1) 15' SNLL, 9' WWC of Brady Ct (07/07/05)	NO METER	RETROFIT
232	BRADY CT	1.0	7' WWC - 2' SNLL	NO METER	RETROFIT
236	BRADY CT	1.0	7 1/2' EWLL, 3' Behind sidewalk	NO METER	RETROFIT
241	BRADY CT	1.0		NO METER	RETROFIT
250	BRADY CT			NO METER	RETROFIT
251	BRADY CT	1.0	1) 19' SNLL, 7' EEC O/BRADY (1/15/07)□□2) 6' eec - 19' snll in box (1	NO METER	RETROFIT
260	BRADY CT	1.0		NO METER	RETROFIT
261	BRADY CT	1.0		NO METER	RETROFIT
270	BRADY CT	1.0		NO METER	RETROFIT
271	BRADY CT	1.0		NO METER	RETROFIT
280	BRADY CT		22' NSLL - 44' SNLL - 1 1/2' WWPL of Brady Court	NO METER	RETROFIT
281	BRADY CT	1.0		NO METER	RETROFIT
290	BRADY CT	1.0	6' SNLL, 29' NNC Brady Ct, 8'W of pole line in c/s box	NO METER	RETROFIT
291	BRADY CT	1.0	29' NNC of Brady Court 6' SNLL 5' EWLL In Standpipe	NO METER	RETROFIT
5800	BRANDON WY	1.0	8 1/2' SSC of Brandon Way - 60' EEC of 58th St	NO METER	RETROFIT
5840	BRANDON WY	1.0	47' EWLL - 34' WELL - 8' SSC of Brandon Way	NO METER	RETROFIT
5843	BRANDON WY	1.0	29' EWLL - 13' WELL - 20' SNPL of Brandon Way	NO METER	RETROFIT
5860	BRANDON WY	1.0	SPL Brandon Way	NO METER	RETROFIT
5861	BRANDON WY	1.0	1) 14' WELL - 7' NNC in box (5/30/06)□□2) 14' WELL, 6' NNC in c/s bo	NO METER	RETROFIT
5870	BRANDON WY	1.0	SPL Brandon Way	NO METER	RETROFIT
5871	BRANDON WY	1.0	NPL Brandon Way	NO METER	RETROFIT
5880	BRANDON WY	1.0	43' EWLL - 6' SSC of Brandon Way	NO METER	RETROFIT

Colonia Heights (6M4)					
STREET_#	STREET_NAM	WS_TapSize	WS_CurbSto	(E) Mtr Status	(P) Work
5881	BRANDON WY	1.0	NPL Brandon Way	NO METER	RETROFIT
5900	BRANDON WY	1.0	40' EWLL 33'WELL 8' SSC of 5900 Brandon Way in box	NO METER	RETROFIT
5901	BRANDON WY	1.0	NPL Brandon Way	NO METER	RETROFIT
5910	BRANDON WY	1.0	33 1/2' EWLL SPL of Brandon	NO METER	RETROFIT
5911	BRANDON WY	1.0	NPL Brandon Way	NO METER	RETROFIT
5920	BRANDON WY	1.0	SPL Brandon Way	NO METER	RETROFIT
5921	BRANDON WY	1.0	NPL Brandon Way	NO METER	RETROFIT
5931	BRANDON WY	1.0	NPL Brandon Way	NO METER	RETROFIT
5940	BRANDON WY	1.0	29' EWPL, 7' SSC	NO METER	RETROFIT
5941	BRANDON WY	1.0	NPL Brandon Way	NO METER	RETROFIT
5951	BRANDON WY	1.0	EPL Brandon Way	NO METER	RETROFIT
5961	BRANDON WY	1.0	29' NSLL, 5' EEC of Brandon Wy in box	NO METER	RETROFIT
5971	BRANDON WY	1.0	NPL Brandon Way	NO METER	RETROFIT
0	BRIGHTON AV			NO METER	RETROFIT
7430	BRIGHTON AV		□□	NO METER	RETROFIT
7832	BRIGHTON AV			NO METER	RETROFIT
3651	BUSINESS DR	1.0		NO METER	RETROFIT
3671	BUSINESS DR	1.0		NO METER	RETROFIT
3701	BUSINESS DR			NO METER	RETROFIT
3741	BUSINESS DR	2.0	1) 7' EEC, 34' SSC of Driveway (10/25/06)	NO METER	RETROFIT 2"
7913	BUTTE AV			NO METER	RETROFIT
7917	BUTTE AV			NO METER	RETROFIT
8004	BUTTE AV	1.0	15' EWLL, 3' S of Pole Line in box	NO METER	RETROFIT
8008	BUTTE AV	1.0	2' EWLL - on NPL	NO METER	RETROFIT
8016	BUTTE AV	1.0	Same & 1' SSPL Street	NO METER	RETROFIT
8020	BUTTE AV	1.0	1) 32' wwc o/PowerInn Rd - 3' nnpl in m/box (6/26/06)□□2) 31' WWC F	NO METER	RETROFIT
4100	CABRILLO WY	1.0	37' SNPL 5' WWC	NO METER	RETROFIT
4101	CABRILLO WY	1.0	27' SNPL 6' EEC	NO METER	RETROFIT
4111	CABRILLO WY		13' NSPL 5' EEC	NO METER	RETROFIT
4120	CABRILLO WY	0.75	14' NSPL 5' WWC	NO METER	RETROFIT
4121	CABRILLO WY		11' NSPL 6' EEC	NO METER	RETROFIT
4200	CABRILLO WY	0.75	18' SNPL 5' WWC	NO METER	RETROFIT
4201	CABRILLO WY		17' SNPL 5' EEC	NO METER	RETROFIT
4210	CABRILLO WY		11' SNPL 5' WWC	NO METER	RETROFIT
4211	CABRILLO WY		20' SNPL 5' EEC	NO METER	RETROFIT
4220	CABRILLO WY		13' NSPL 5' WWC	NO METER	RETROFIT
4221	CABRILLO WY		10' NSPL 5' EEC	NO METER	RETROFIT
4224	CABRILLO WY	1.0	17' SNPL 5' WWC	NO METER	RETROFIT
4225	CABRILLO WY		12' NSPL 6' EEC	NO METER	RETROFIT

Colonia Heights (6M4)					
STREET_#	STREET_NAM	WS_TapSize	WS_CurbSto	(E) Mtr Status	(P) Work
4228	CABRILLO WY	0.75	18' NSPL 5' WWC	NO METER	RETROFIT
4229	CABRILLO WY		15' NSPL 5' EEC	NO METER	RETROFIT
4234	CABRILLO WY		9' SNPL 5' WWC	NO METER	RETROFIT
4235	CABRILLO WY		19' SNPL 5' EEC	NO METER	RETROFIT
4238	CABRILLO WY		18' NSPL 5' WWC	NO METER	RETROFIT
4239	CABRILLO WY			NO METER	RETROFIT
4240	CABRILLO WY	0.75	24' NSPL 5' WWC	NO METER	RETROFIT
4241	CABRILLO WY		19' SNPL 6' EEC	NO METER	RETROFIT
4244	CABRILLO WY		17' NSPL 5' WWC	NO METER	RETROFIT
4245	CABRILLO WY		25' NSPL 6' EEC	NO METER	RETROFIT
4300	CABRILLO WY		11' SNPL 5' WWC	NO METER	RETROFIT
4301	CABRILLO WY		23' NSPL 5' EEC	NO METER	RETROFIT
4310	CABRILLO WY		35' snll - 5' wwc in box (6/22/07)	NO METER	RETROFIT
4311	CABRILLO WY	0.75	26' NSPL 5' EEC	NO METER	RETROFIT
4320	CABRILLO WY		8' SNPL 5' WWC	NO METER	RETROFIT
4321	CABRILLO WY		18' SNPL 5' EEC	NO METER	RETROFIT
4324	CABRILLO WY		14' SNPL 5' WWC	NO METER	RETROFIT
4325	CABRILLO WY	0.75	23' NSPL 6' EEC	NO METER	RETROFIT
4328	CABRILLO WY		18' NSPL 5' WWC	NO METER	RETROFIT
4329	CABRILLO WY		16' NSPL 5' EEC	NO METER	RETROFIT
4400	CABRILLO WY	1.0	1) 5' WWC, 10' SNLL in c/s box (1/20/06)□□2) 10' SNLL 5' WWC	NO METER	RETROFIT
4401	CABRILLO WY		11' SNPL 5' EEC	NO METER	RETROFIT
4410	CABRILLO WY		9' NSPL 5' WWC	NO METER	RETROFIT
4411	CABRILLO WY		17' NSPL 5' EEC	NO METER	RETROFIT
4420	CABRILLO WY		9' SNPL 5' WWC	NO METER	RETROFIT
4421	CABRILLO WY		16' SNPL 5' EEC	NO METER	RETROFIT
4424	CABRILLO WY		20' NSPL 5' WWC	NO METER	RETROFIT
4425	CABRILLO WY		13' NSPL 5' EEC	NO METER	RETROFIT
4428	CABRILLO WY		14' NSPL 5' WWC	NO METER	RETROFIT
4429	CABRILLO WY		17' NSPL 6' EEC of Cabrillo	NO METER	RETROFIT
4434	CABRILLO WY		10' SNPL 5' WWC	NO METER	RETROFIT
4435	CABRILLO WY		17' SNPL 5' EEC	NO METER	RETROFIT
4438	CABRILLO WY		18' NSPL 5' WWC	NO METER	RETROFIT
4439	CABRILLO WY		7' NSPL 6' EEC	NO METER	RETROFIT
4440	CABRILLO WY		25' SNPL 5' WWC	NO METER	RETROFIT
4441	CABRILLO WY		20' SNPL 5' EEC	NO METER	RETROFIT
4500	CABRILLO WY	1.0	25' SNLL - 5'WWC	NO METER	RETROFIT
4501	CABRILLO WY		24' NSPL 5' EEC	NO METER	RETROFIT
4510	CABRILLO WY		18' NSPL 5' WWC	NO METER	RETROFIT

Colonia Heights (6M4)					
STREET_#	STREET_NAM	WS_TapSize	WS_CurbSto	(E) Mtr Status	(P) Work
4511	CABRILLO WY		21' NSPL 5' EEC	NO METER	RETROFIT
4520	CABRILLO WY		23' NSPL 5' WWC	NO METER	RETROFIT
4521	CABRILLO WY		14' SNPL 6' EEC	NO METER	RETROFIT
4624	CABRILLO WY		19' NSPL 5' WWC	NO METER	RETROFIT
4625	CABRILLO WY	1.0	18' NSPL 5' EEC	NO METER	RETROFIT
4628	CABRILLO WY	1.0	13' SNPL 5' WWC	NO METER	RETROFIT
4629	CABRILLO WY		28' NSPL 5' EEC	NO METER	RETROFIT
4634	CABRILLO WY		23' NSPL 5' WWC	NO METER	RETROFIT
4635	CABRILLO WY	1.0	12' NSPL 5' EEC	NO METER	RETROFIT
4738	CABRILLO WY		22' SNPL 5' WWC	NO METER	RETROFIT
4739	CABRILLO WY		19' SNPL 5' EEC	NO METER	RETROFIT
4740	CABRILLO WY		20' NSPL 5' WWC	NO METER	RETROFIT
4741	CABRILLO WY	1.0	16' NSPL 5' EEC	NO METER	RETROFIT
7935	CARLTON RD			NO METER	RETROFIT
7935	CARLTON RD	1.0	45' SSPL of Clifton - 180' NNPL of Carlton 2' EEPL of Abbey Road	NO METER	RETROFIT
7941	CARLTON RD			NO METER	RETROFIT
7950	CARLTON RD		40' SSPL of Clifton - 21 E of Abby Road	NO METER	RETROFIT
8000	CARLTON RD	1.0	Same as Corp Cock and at SPL of Carlton Rd	NO METER	RETROFIT
8008	CARLTON RD			NO METER	RETROFIT
8015	CARLTON RD			NO METER	RETROFIT
8016	CARLTON RD			NO METER	RETROFIT
8020	CARLTON RD			NO METER	RETROFIT
8024	CARLTON RD			NO METER	RETROFIT
8028	CARLTON RD			NO METER	RETROFIT
7920	CLIFTON RD			NO METER	RETROFIT
8000	CLIFTON RD	1.0	45' SSPL Clifton Road - 180' NNPL Clifton - 2' EEPL □□Abbey Road (i	NO METER	RETROFIT
8002	CLIFTON RD			NO METER	RETROFIT
8010	CLIFTON RD			NO METER	RETROFIT
8012	CLIFTON RD			NO METER	RETROFIT
7831	CLIFTON RD A			NO METER	RETROFIT
8180	CUCAMONGA AV			NO METER	RETROFIT
1	DON MERLINO CT	1.0	Same & Back of Walk	NO METER	RETROFIT
9	DON MERLINO CT	1.0	25' SNLL of above - 9' EEC of Don Merlino	NO METER	RETROFIT
10	DON MERLINO CT	1.0	Same & Back of Walk	NO METER	RETROFIT
14	DON MERLINO CT	1.0	Same & Back of Walk	NO METER	RETROFIT
15	DON MERLINO CT	1.0	Same & Back of Walk	NO METER	RETROFIT
18	DON MERLINO CT	1.0	12' EWLL - 5' SSC of Don Merlino Court	NO METER	RETROFIT
4503	E RAILROAD ST	1.0	104' N of valve 156 Map# 42 & 1' EE pole line	NO METER	RETROFIT
7300	FOLSOM BL			NO METER	RETROFIT

Colonia Heights (6M4)					
STREET_#	STREET_NAM	WS_TapSize	WS_CurbSto	(E) Mtr Status	(P) Work
7400	FOLSOM BL			NO METER	RETROFIT
7606	FOLSOM BL			NO METER	RETROFIT
7610	FOLSOM BL			NO METER	RETROFIT
7916	FOLSOM BL			NO METER	RETROFIT
3904	FOTOS CT	1.0	51' SSPL of 14th Ave, 34'NSLL, back of walk	NO METER	RETROFIT
3905	FOTOS CT	1.0	47' SSPL of 14th Avenue	NO METER	RETROFIT
3908	FOTOS CT			NO METER	RETROFIT
3909	FOTOS CT	1.0	8' EEC of Fotos Court - 22' SNPL of lot	NO METER	RETROFIT
3911	FOTOS CT	1.0	169' SSPL of 14th Avenue	NO METER	RETROFIT
3913	FOTOS CT	1.0	235' SSPL of 14th Avenue	NO METER	RETROFIT
3960	FOTOS CT	1.0	235' SSPL of 14th Avenue	NO METER	RETROFIT
4000	FOTOS CT	1.0	314' SSPL of 14th Avenue	NO METER	RETROFIT
4021	FOTOS CT	1.0	31' SNLL - 8' EEC of Fotos Court	NO METER	RETROFIT
4024	FOTOS CT	1.0	381' SSPL of 14th Avenue	NO METER	RETROFIT
4025	FOTOS CT	1.0	377' SSPL of 14th Avenue	NO METER	RETROFIT
4038	FOTOS CT	1.0	CL of Street	NO METER	RETROFIT
4039	FOTOS CT	1.0	CL of Street	NO METER	RETROFIT
4043	FOTOS CT	1.0	CL of Street	NO METER	RETROFIT
4046	FOTOS CT	1.0	CL of Street	NO METER	RETROFIT
4050	FOTOS CT	1.0	7' NNC Fotos Court 30' WELL	NO METER	RETROFIT
4051	FOTOS CT	1.0	CL of Street	NO METER	RETROFIT
4054	FOTOS CT	1.0	9' WELL - 6 1/2' NNC of Fotos Court	NO METER	RETROFIT
4058	FOTOS CT	1.0	14' NSLL - 6' WWC of Fotos Court of 4058 Fotos Ct, □□15' SNLL in c/	NO METER	RETROFIT
4062	FOTOS CT	1.0	CL of Street	NO METER	RETROFIT
4066	FOTOS CT	1.0	CL of Street	NO METER	RETROFIT
4070	FOTOS CT	1.0	CL of Street	NO METER	RETROFIT
4074	FOTOS CT	1.0	CL of Street	NO METER	RETROFIT
4079	FOTOS CT	1.0	32' NSLL 6' EEC	NO METER	RETROFIT
4083	FOTOS CT	1.0	CL of Street	NO METER	RETROFIT
4087	FOTOS CT	1.0	CL of Street	NO METER	RETROFIT
4091	FOTOS CT	1.0	CL of Street	NO METER	RETROFIT
4095	FOTOS CT	1.0	15' WELL, 6' SSC, 16' EWLL	NO METER	RETROFIT
4096	FOTOS CT	1.0	1) 32' EWLL - 7' NNC in box (6/23/06)□□2) CL of Street	NO METER	RETROFIT
4099	FOTOS CT	1.0	CL of Street	NO METER	RETROFIT
4103	FOTOS CT	1.0	29' EWLL - 5' SSC of Fotos Court	NO METER	RETROFIT
4104	FOTOS CT	1.0	CL of Street	NO METER	RETROFIT
4107	FOTOS CT	1.0	17' WELL, 3' Behind Sidewalk in S/P	NO METER	RETROFIT
4108	FOTOS CT	1.0	17' WELL - Back of Sidewalk	NO METER	RETROFIT
4111	FOTOS CT	1.0	12' SNLL - 5' WWC of Fotos Court	NO METER	RETROFIT

Colonia Heights (6M4)					
STREET_#	STREET_NAM	WS_TapSize	WS_CurbSto	(E) Mtr Status	(P) Work
4112	FOTOS CT	1.0	CL of Street	NO METER	RETROFIT
0	FRUITRIDGE RD			NO METER	RETROFIT
0	FRUITRIDGE RD			NO METER	RETROFIT
0	FRUITRIDGE RD			NO METER	RETROFIT
6451	FRUITRIDGE RD			NO METER	RETROFIT
2900	HEINZ ST			NO METER	RETROFIT
8004	HICKORY AV			NO METER	RETROFIT
8016	HICKORY AV			NO METER	RETROFIT
8016	HICKORY AV			NO METER	RETROFIT
8016	HICKORY AV			NO METER	RETROFIT
8016	HICKORY AV			NO METER	RETROFIT
7	HOOPA CT	1.0	Same & Back of Walk	NO METER	RETROFIT
8	HOOPA CT	1.0	63' SNLL 5' EEC Hoopa	NO METER	RETROFIT
11	HOOPA CT	1.0	Same & Back of Walk	NO METER	RETROFIT
12	HOOPA CT	1.0	Same & back of Walk	NO METER	RETROFIT
15	HOOPA CT	1.0	Same & Back of Walk	NO METER	RETROFIT
16	HOOPA CT	1.0	Same & Back of Walk	NO METER	RETROFIT
19	HOOPA CT	1.0	26' SNLL 7' WWC of Hoopa Ct	NO METER	RETROFIT
20	HOOPA CT	1.0	Same & Back of Walk	NO METER	RETROFIT
23	HOOPA CT	1.0	Same & Back of Walk	NO METER	RETROFIT
24	HOOPA CT	1.0	Same & Back of Walk	NO METER	RETROFIT
27	HOOPA CT	1.0	Same & Back of Walk	NO METER	RETROFIT
28	HOOPA CT	1.0	Same & Back of Walk	NO METER	RETROFIT
31	HOOPA CT	1.0	26' SNLL 8' WWC	NO METER	RETROFIT
32	HOOPA CT	1.0	Same & Back of Walk	NO METER	RETROFIT
35	HOOPA CT	1.0	Same & Back of Walk	NO METER	RETROFIT
36	HOOPA CT	1.0	Same & Back of Walk	NO METER	RETROFIT
39	HOOPA CT	1.0	Same & Back of Walk	NO METER	RETROFIT
40	HOOPA CT	1.0	Same & Back of Walk	NO METER	RETROFIT
1	JUNE VEL CT	1.0	Same & Back of Walk	NO METER	RETROFIT
2	JUNE VEL CT	1.0	Same & Back of Walk	NO METER	RETROFIT
5	JUNE VEL CT	1.0	22' SNPL 6' EEC	NO METER	RETROFIT
6	JUNE VEL CT	1.0	Same & Back of Walk	NO METER	RETROFIT
9	JUNE VEL CT	1.0	9' NSPL 7' EEC	NO METER	RETROFIT
10	JUNE VEL CT	1.0	19' SNLL, 1' WELL	NO METER	RETROFIT
14	JUNE VEL CT	1.0	Same & Back of Walk	NO METER	RETROFIT
6501	KIPPING WY	1.0		NO METER	RETROFIT
6531	KIPPING WY	1.0		NO METER	RETROFIT
6541	KIPPING WY	1.0		NO METER	RETROFIT

Colonia Heights (6M4)					
STREET_#	STREET_NAM	WS_TapSize	WS_CurbSto	(E) Mtr Status	(P) Work
6551	KIPPING WY	1.0		NO METER	RETROFIT
6581	KIPPING WY	1.0	92' EEC of Kipping - 67' SSC of Kipping 5' SNLL - 3' WELL	NO METER	RETROFIT
6601	KIPPING WY	1.25	14' WELL - 6' NNC of Kipping	NO METER	RETROFIT
6620	KIPPING WY	1.5	1 - 1/2" gate valve 3' WELL - 1' SSPL of Kipping Way	NO METER	RETROFIT
6631	KIPPING WY	1.0	31' EWLL & 6' NNC	NO METER	RETROFIT
6640	KIPPING WY	1.0	26' EWLL - 2 1/2' SSPL of Kipping	NO METER	RETROFIT
6641	KIPPING WY	1.0	132' W of W Curb of 67th Street and 52' E of W lot Line	NO METER	RETROFIT
1	LACAM CR	1.0	Same & Back of Walk	NO METER	RETROFIT
5	LACAM CR	1.0	Same & Back of Walk	NO METER	RETROFIT
11	LACAM CR	1.0	Same & Back of Walk	NO METER	RETROFIT
15	LACAM CR	1.0	Same & Back of Walk	NO METER	RETROFIT
19	LACAM CR			NO METER	RETROFIT
21	LACAM CR			NO METER	RETROFIT
24	LACAM CR	1.0	Same & Back of Walk	NO METER	RETROFIT
25	LACAM CR			NO METER	RETROFIT
27	LACAM CR			NO METER	RETROFIT
28	LACAM CR	1.0	22' SNLL 30' NSLL - 8' WWC of LACAM Circle, in box	NO METER	RETROFIT
31	LACAM CR			NO METER	RETROFIT
32	LACAM CR	1.0	Same & Back of Walk	NO METER	RETROFIT
35	LACAM CR			NO METER	RETROFIT
36	LACAM CR	1.0	Same & Back of Walk	NO METER	RETROFIT
39	LACAM CR	1.0	21' SNLL, 7' EEC of Lacam Circle in S/P	NO METER	RETROFIT
40	LACAM CR	1.0	Same & Back of Walk	NO METER	RETROFIT
43	LACAM CR			NO METER	RETROFIT
44	LACAM CR	1.0	Same & Back of Walk	NO METER	RETROFIT
47	LACAM CR			NO METER	RETROFIT
48	LACAM CR	1.0	1) 19' SNLL, 7' WWC in box (2/7/06)□□2) 20' SNLL, 6' WWC in box□□	NO METER	RETROFIT
51	LACAM CR			NO METER	RETROFIT
52	LACAM CR	1.0	Same & Back of Walk	NO METER	RETROFIT
55	LACAM CR			NO METER	RETROFIT
56	LACAM CR	1.0	49' NNC of Lacam Circle - 8' WWC of Lacam Circle	NO METER	RETROFIT
59	LACAM CR			NO METER	RETROFIT
61	LACAM CR			NO METER	RETROFIT
6904	MAITA CR	1.0		NO METER	RETROFIT
6905	MAITA CR	1.0		NO METER	RETROFIT
6908	MAITA CR	1.0		NO METER	RETROFIT
6909	MAITA CR	1.0		NO METER	RETROFIT
6912	MAITA CR	1.0		NO METER	RETROFIT
6913	MAITA CR	1.0		NO METER	RETROFIT

Colonia Heights (6M4)					
STREET_#	STREET_NAM	WS_TapSize	WS_CurbSto	(E) Mtr Status	(P) Work
6916	MAITA CR	1.0		NO METER	RETROFIT
6917	MAITA CR	1.0		NO METER	RETROFIT
6920	MAITA CR	1.0		NO METER	RETROFIT
6921	MAITA CR	1.0		NO METER	RETROFIT
6924	MAITA CR	1.0	22' EWLL, 5' SSC in Box	NO METER	RETROFIT
6925	MAITA CR	1.0		NO METER	RETROFIT
6928	MAITA CR	1.0	41' WELL, 6' SSC in Box	NO METER	RETROFIT
6929	MAITA CR	1.0		NO METER	RETROFIT
6932	MAITA CR	1.0	35'WELL-5'SSC of Maita Cir in s/p	NO METER	RETROFIT
6933	MAITA CR	1.0	26.4' WELL on SPL of Lot	NO METER	RETROFIT
6936	MAITA CR			NO METER	RETROFIT
6937	MAITA CR	1.0	1) 26' EWLL - 30' WELL - 5' NNC o/Maita in SP (10/26/06)□□2) 26' EV	NO METER	RETROFIT
6941	MAITA CR	1.0	17' EWLL - 7' NNC of Maita	NO METER	RETROFIT
6945	MAITA CR	1.0		NO METER	RETROFIT
6949	MAITA CR	1.0		NO METER	RETROFIT
6953	MAITA CR	1.0		NO METER	RETROFIT
6956	MAITA CR	1.0		NO METER	RETROFIT
6957	MAITA CR	1.0	21' SNLL - 1' Behind Sidewalk	NO METER	RETROFIT
6960	MAITA CR	1.0		NO METER	RETROFIT
6961	MAITA CR	1.0	21' SNLL - 5' EEC	NO METER	RETROFIT
6964	MAITA CR	1.0		NO METER	RETROFIT
6965	MAITA CR	1.0	21' SNLL, 5' EEC in S/P	NO METER	RETROFIT
6968	MAITA CR	1.0		NO METER	RETROFIT
6969	MAITA CR	1.0		NO METER	RETROFIT
6973	MAITA CR	1.0	24' SNLL, 5' EEC of Maita Circle	NO METER	RETROFIT
6977	MAITA CR	1.0	29' SNLL, 5' EEC of Maita Circle in Standpipe	NO METER	RETROFIT
6981	MAITA CR	1.0	30' SNLL - 7' EEC of Maita Circle	NO METER	RETROFIT
6988	MAITA CR	1.0	7' EEC of Maita, 27' SNLL	NO METER	RETROFIT
6989	MAITA CR	1.0	24' SNLL, 5' EEC	NO METER	RETROFIT
6992	MAITA CR	1.0	37' NSLL- 6' WWC of Maita Circle	NO METER	RETROFIT
6993	MAITA CR	1.0	22.6' SNLL on WPL of Lot	NO METER	RETROFIT
6996	MAITA CR	1.0		NO METER	RETROFIT
6997	MAITA CR	1.0		NO METER	RETROFIT
7000	MAITA CR	1.0		NO METER	RETROFIT
7001	MAITA CR	1.0		NO METER	RETROFIT
7004	MAITA CR	1.0		NO METER	RETROFIT
7005	MAITA CR	1.0		NO METER	RETROFIT
7009	MAITA CR	1.0	23' SNPL & 4' EEC in S/P	NO METER	RETROFIT
7013	MAITA CR	1.0		NO METER	RETROFIT

Colonia Heights (6M4)					
STREET_#	STREET_NAM	WS_TapSize	WS_CurbSto	(E) Mtr Status	(P) Work
7017	MAITA CR	1.0	48' SNLL - 6' WELL in S/P	NO METER	RETROFIT
7020	MAITA CR	1.0		NO METER	RETROFIT
7021	MAITA CR	1.0	25' WELL, 6' SSC	NO METER	RETROFIT
7023	MAITA CR	1.0	23' EWLL - 6' SSC of Maita Circle	NO METER	RETROFIT
7024	MAITA CR	1.0		NO METER	RETROFIT
7027	MAITA CR	1.0		NO METER	RETROFIT
7028	MAITA CR			NO METER	RETROFIT
7031	MAITA CR	1.0	13' EWLL, 5' SSC in S/P	NO METER	RETROFIT
7032	MAITA CR	1.0		NO METER	RETROFIT
7035	MAITA CR	1.0	17' EWLL - 6' SSC of Maita	NO METER	RETROFIT
7036	MAITA CR	1.0		NO METER	RETROFIT
7039	MAITA CR	1.0	5' SSC of Street - 20' EWLL	NO METER	RETROFIT
7040	MAITA CR	1.0		NO METER	RETROFIT
7043	MAITA CR	1.0	37' WELL, 43' EWLL, 6' SSC of Maita Cr	NO METER	RETROFIT
7044	MAITA CR	1.0		NO METER	RETROFIT
7048	MAITA CR	1.0	35 1/2' WELL, 5' NNC of Maita Cir in c/s box	NO METER	RETROFIT
7051	MAITA CR	1.0	10' EWLL, 6' SSC of Maita Circle in Box	NO METER	RETROFIT
7052	MAITA CR	1.0		NO METER	RETROFIT
5	MALDONADO CT			NO METER	RETROFIT
6	MALDONADO CT			NO METER	RETROFIT
9	MALDONADO CT			NO METER	RETROFIT
10	MALDONADO CT			NO METER	RETROFIT
14	MALDONADO CT			NO METER	RETROFIT
15	MALDONADO CT			NO METER	RETROFIT
1	MALONE CT	1.0	44' N C/L Bender Ct - 10' W C/L 69th St	NO METER	RETROFIT
2	MALONE CT	1.0	Same - 10' EEC 69th Street	NO METER	RETROFIT
10	MALONE CT	1.0	22'EWLL, 6'SSC Malone Street in S/P	NO METER	RETROFIT
14	MALONE CT	1.0	30' WEPL of Lot	NO METER	RETROFIT
15	MALONE CT	1.0	36 1/2' W E of Lot	NO METER	RETROFIT
18	MALONE CT	1.0	30' WEPL of Lot	NO METER	RETROFIT
22	MALONE CT	1.0	22' EWLL - 9' SSC of Malone Court	NO METER	RETROFIT
26	MALONE CT	1.0	19 1/2' EWPL of Lot	NO METER	RETROFIT
30	MALONE CT	1.0	22' WEPL of Lot	NO METER	RETROFIT
34	MALONE CT	1.0	12' SNLL - 9' EEC of Malone Court	NO METER	RETROFIT
37	MALONE CT	1.0	38' SNLL - 3' Back of Walk	NO METER	RETROFIT
38	MALONE CT	1.0	14' 5" SNLL - 9' EEC	NO METER	RETROFIT
42	MALONE CT	1.0	20 1/2' SNPL of Lot	NO METER	RETROFIT
45	MALONE CT	1.0	30' NSPL of Lot	NO METER	RETROFIT
46	MALONE CT	1.0	22' SNPL of Lot - EPL of Malone	NO METER	RETROFIT

Colonia Heights (6M4)					
STREET_#	STREET_NAM	WS_TapSize	WS_CurbSto	(E) Mtr Status	(P) Work
49	MALONE CT	1.0	39' NSPL of Lot	NO METER	RETROFIT
50	MALONE CT	1.0	39' NSPL of Lot	NO METER	RETROFIT
53	MALONE CT	1.0	36' SNLL - 9' WWC of Street	NO METER	RETROFIT
54	MALONE CT	1.0	35' NSPL of Lot	NO METER	RETROFIT
57	MALONE CT	1.0	28' SNPL of Lot	NO METER	RETROFIT
58	MALONE CT	1.0	23' NSLL - 6' EEC of Street	NO METER	RETROFIT
61	MALONE CT	1.0	40' NSPL of Lot	NO METER	RETROFIT
62	MALONE CT	1.0	45' NSPL of Lot	NO METER	RETROFIT
64	MALONE CT	1.0	39' NSLL - 29' SNLL - 10' WEC of Street	NO METER	RETROFIT
65	MALONE CT	1.0	39' NSPL of Lot	NO METER	RETROFIT
68	MALONE CT	1.0	27' SNPL of Lot	NO METER	RETROFIT
69	MALONE CT	1.0	35' NSPL of Lot	NO METER	RETROFIT
73	MALONE CT	1.0	34 1/2' NSPL of Lot	NO METER	RETROFIT
74	MALONE CT	1.0	40' NSPL of Lot	NO METER	RETROFIT
78	MALONE CT	1.0	34' NSPL of Lot	NO METER	RETROFIT
79	MALONE CT	1.0	32' NSLL- 9' EEC in box	NO METER	RETROFIT
82	MALONE CT	1.0	35' NSLL, 3 1/2' Behind Sidewalk	NO METER	RETROFIT
83	MALONE CT	1.0	41' NSPL of Lot	NO METER	RETROFIT
85	MALONE CT	1.0	28 1/2' SNLL - 42' NSLL - 9' WWC of Malone	NO METER	RETROFIT
86	MALONE CT	1.0	24' SNPL of Lot	NO METER	RETROFIT
88	MALONE CT	1.0	41' NSPL of Lot	NO METER	RETROFIT
89	MALONE CT	1.0	26 1/2' SNPL of Lot	NO METER	RETROFIT
90	MALONE CT	1.0	13' N of N Cb of Malone Ct and 42' S of N Lot Line	NO METER	SERVICE
93	MALONE CT	1.0	89' WELL - 79' EWLL - Main is 4' S of NPL	NO METER	SERVICE
15	MANLEY CT	1.0	30' WEPL of Lot	NO METER	RETROFIT
16	MANLEY CT	1.0	22' EWPL of Lot	NO METER	RETROFIT
23	MANLEY CT	1.0	27 SNPL of Lot	NO METER	RETROFIT
24	MANLEY CT	1.0	NSPL of Lot	NO METER	RETROFIT
27	MANLEY CT	1.0	30' NSPL of Lot	NO METER	RETROFIT
28	MANLEY CT	1.0	30' NSPL of Lot	NO METER	RETROFIT
31	MANLEY CT	1.0	35' NSPL of Lot	NO METER	RETROFIT
32	MANLEY CT	1.0		NO METER	RETROFIT
35	MANLEY CT	1.0	46 1/2' NSLL, 31'SNLL, 6'WWC in SP	NO METER	RETROFIT
36	MANLEY CT	1.0	36' SNPL of Lot	NO METER	RETROFIT
39	MANLEY CT	1.0	15 1/2' NSPL of Lot	NO METER	RETROFIT
40	MANLEY CT	1.0	25 1/2' NSPL of Lot	NO METER	RETROFIT
43	MANLEY CT	1.0	9' NNC, 17' EWLL	NO METER	RETROFIT
44	MANLEY CT	1.0	25 1/2' WEPL of Lot	NO METER	RETROFIT
47	MANLEY CT	1.0	21' WELL- 8' NNC of Ct (in box)	NO METER	RETROFIT

Colonia Heights (6M4)					
STREET_#	STREET_NAM	WS_TapSize	WS_CurbSto	(E) Mtr Status	(P) Work
48	MANLEY CT			NO METER	RETROFIT
51	MANLEY CT	1.0	25' NE of the NWPL of Lot	NO METER	RETROFIT
55	MANLEY CT	1.0	37' NSPL of Lot	NO METER	RETROFIT
56	MANLEY CT			NO METER	RETROFIT
59	MANLEY CT	1.0	35' NSPL of Lot	NO METER	RETROFIT
60	MANLEY CT	1.0	37' NSPL of Lot	NO METER	RETROFIT
63	MANLEY CT	1.0	1) 22' SNLL, 8' EEC O/MANLEY IN C/S BOX (10/21/06)□□2) 38' NSF	NO METER	RETROFIT
64	MANLEY CT	1.0	37' NSPL of Lot	NO METER	RETROFIT
67	MANLEY CT	1.0	36' NSPL of Lot	NO METER	RETROFIT
68	MANLEY CT	1.0	37' NSPL of Lot	NO METER	RETROFIT
7301	MARIN AV	1.0	10' EWLL - 6' NNC Marin Ave	NO METER	RETROFIT
7321	MARIN AV	1.0	9' WEPL - 8' NNC of Marin	NO METER	RETROFIT
7329	MARIN AV	1.0	17' WELL - 5' NNC of Marin	NO METER	RETROFIT
7332	MARIN AV	1.25	4' WELL - 81' EWLL - 2' SSPL of Marin in box	NO METER	RETROFIT
7400	MARIN AV	1.0	3' WELL - 51' EWLL - SPL of Marin	NO METER	RETROFIT
7401	MARIN AV	1.0	41' SNLL - 6' EEC of Marian	NO METER	RETROFIT
7404	MARIN AV	1.0	27' EWLL - 35' WELL - NPL of Marin	NO METER	RETROFIT
7405	MARIN AV	1.0	15' EWLL - NPL of Marin	NO METER	RETROFIT
7408	MARIN AV	1.0	8' EWLL - 53' WELL - 1' SSPL of Marin	NO METER	RETROFIT
7411	MARIN AV	1.0	57' NNC of Marin - 5' EEC of Sequoia, 7' EEC of Hoopa	NO METER	RETROFIT
7414	MARIN AV			NO METER	RETROFIT
7414	MARIN AV	1.0	#1) 21' WELL, 5' SSC of Marin in box□□□□#2) 21' WELL, 5' SSC of M	NO METER	RETROFIT
7415	MARIN AV	1.0	13' EWLL - 1 1/2' 5' NNC	NO METER	RETROFIT
7509	MARIN AV	1.0	35' WELL - 8' EWLL - Main is 31' NSPL of Marin Avenue	NO METER	RETROFIT
7605	MARIN AV	1.0	27' EEC 76th St - 7' NNC Marin	NO METER	RETROFIT
7607	MARIN AV	1.0	12' EWLL & 7' NNC Marin in c/s box	NO METER	RETROFIT
7609	MARIN AV	1.0	14' WELL, 7' NNC Marin Ave in S/P	NO METER	RETROFIT
7611	MARIN AV	1.0	3' EWLL - 47' WELL - 1' NNPL of Marin	NO METER	RETROFIT
7701	MARIN AV			NO METER	RETROFIT
7713	MARIN AV	1.0	33.6' EWLL - 9' SNPL of Marin Avenue	NO METER	RETROFIT
7719	MARIN AV			NO METER	RETROFIT
7790	MARIN AV			NO METER	RETROFIT
7840	MARIN AV	1.0	31' WELL - 6' SSC of Marin	NO METER	RETROFIT
7880	MARIN AV	1.0	Same & Back of Walk	NO METER	RETROFIT
5804	MARK TWAIN AV	1.0	100' EEC of 58th Street and at CL of the Street, and on SPL of Mark T	NO METER	RETROFIT
5805	MARK TWAIN AV	1.0	96' 5" EEC of 58th Street and at CL of the Street, and on NPL of Mark	NO METER	RETROFIT
5808	MARK TWAIN AV	1.0	60' EEC of 58th Street and on the SPL of Mark Twain Avenue at CL of	NO METER	RETROFIT
5809	MARK TWAIN AV	1.0	1) 22' ewll - 6' nnc in sp (4/12/07)□□2) 21'EWLL, 6'NNC in c/s box	NO METER	RETROFIT
5812	MARK TWAIN AV	1.0	25'EWLL, 6'SSC in box.	NO METER	RETROFIT

Colonia Heights (6M4)					
STREET_#	STREET_NAM	WS_TapSize	WS_CurbSto	(E) Mtr Status	(P) Work
5813	MARK TWAIN AV	1.0	211' 5" EEC of 58th Street and at CL of Mark Twain Ave and at CL of t	NO METER	RETROFIT
5816	MARK TWAIN AV	1.0	269' EEC of 58th Street and at CL of Mark Twain Avenue at CL of the l	NO METER	RETROFIT
5817	MARK TWAIN AV	1.0	207' EEPL of 58th Street and of Lot at NPL of Mark Twain Ave	NO METER	RETROFIT
5820	MARK TWAIN AV	1.0	323' EEC of 58th Street and at CL of Mark Twain Ave and at CL of the	NO METER	RETROFIT
5821	MARK TWAIN AV	1.0	322' EEC of 58th Street and at CL of Mark Twain Avenue and at CL of	NO METER	RETROFIT
5824	MARK TWAIN AV	1.0	389' EEC of 58th Street and at CL of Mark Twain Avenue and at CL of	NO METER	RETROFIT
5825	MARK TWAIN AV	1.0	387' EEC of 58th Street and at CL of Mark Twain Avenue and at CL of	NO METER	RETROFIT
5828	MARK TWAIN AV	1.0	444' 5" EEC of 58th Street and at CL of the Lot on SPL of Mark Twain	NO METER	RETROFIT
5829	MARK TWAIN AV	1.0	443' EEC of 58th Street and at CL of Mark Twain Avenue and at CL of	NO METER	RETROFIT
5832	MARK TWAIN AV	1.0	504' 5" EEC of 58th Street and at CL of Mark Twain Avenue and on CL	NO METER	RETROFIT
5833	MARK TWAIN AV	1.0	35' WELL - 6' NNC of Mark Twain	NO METER	RETROFIT
5836	MARK TWAIN AV	1.0	563' EEC of 58th Street and at CL of Mark Twain Avenue and at CL of	NO METER	RETROFIT
5841	MARK TWAIN AV	1.0	47' WWC of 59th Street (S) and at CL of Mark Twain Ave and at NPL o	NO METER	RETROFIT
5845	MARK TWAIN AV	1.0	23 1/2' WELL @ Back of Sidewalk	NO METER	RETROFIT
5849	MARK TWAIN AV			NO METER	RETROFIT
3900	MARSALLA CT			NO METER	RETROFIT
3901	MARSALLA CT	1.0	Same as Location, back of sidewalk	NO METER	RETROFIT
3931	MARSALLA CT	1.0	Same as Location, back of sidewalk	NO METER	RETROFIT
3940	MARSALLA CT	1.0	29' SNPL of Lot - Back of Sidewalk	NO METER	RETROFIT
3991	MARSALLA CT	1.0	Same as location, back of sidewalk	NO METER	RETROFIT
4000	MARSALLA CT	1.0	29' SNPL of Lot 151, Back of Sidewalk	NO METER	RETROFIT
4001	MARSALLA CT	1.0	36' SNLL - 6' EEC of Marsalla	NO METER	RETROFIT
4020	MARSALLA CT	1.0	21' EWPL of Marsalla Ct, 37' NSPL of Lot 150, back of sidewalk	NO METER	RETROFIT
4021	MARSALLA CT	1.0	21' WEPL of Marsalla Ct. 37' NSPL of Lot 155, back of Sidewalk	NO METER	RETROFIT
4050	MARSALLA CT	1.0	21' EWPL of Marsalla Ct, 29' SNLL of Lot 149, Back of Sidewalk	NO METER	RETROFIT
4060	MARSALLA CT	1.0	21' ELPL of Marsalla Ct, 37' NSPL of Lot 149, Back of Sidewalk	NO METER	RETROFIT
4061	MARSALLA CT	1.0	21' WEPL of Marsalla Ct, 62' SNPL of Lot 156, Back of Sidewalk	NO METER	RETROFIT
4080	MARSALLA CT	1.0	21' EWPL of Marsalla Ct, 9' SNLL of Lot 148, Back of Sidewalk	NO METER	RETROFIT
4100	MARSALLA CT	1.0	21' WWPL of Marsalla Ct, 52' NSPL of Lot 148, Back of Sidewalk	NO METER	RETROFIT
4101	MARSALLA CT	1.0	21' WEPL of Marsalla Ct, 29' SNPL of Lot 157, Back of Sidewalk	NO METER	RETROFIT
4133	MARSALLA CT	1.0	21' EWPL of Marsalla Ct, 24' NSLL of Lot 148, Back of Sidewalk	NO METER	RETROFIT
4137	MARSALLA CT	1.0	21' WEPL of Marsalla Ct, 29' SNPL of Lot 158, Back of Sidewalk	NO METER	RETROFIT
4140	MARSALLA CT	1.0	25' SNLL - 7' WWC of Marsalla	NO METER	RETROFIT
4141	MARSALLA CT	1.0	21' WEPL of Marsalla Ct, 37' NSPL of Lot 158, Back of Sidewalk	NO METER	RETROFIT
4142	MARSALLA CT	1.0	21' EWPL of Marsalla Ct, 37' NSPL of Lot 147, Back of Sidewalk	NO METER	RETROFIT
4234	MARSALLA CT	1.0	21' EWPL of Marsalla Ct, 29' SNPL of Lot 146, Back of Sidewalk	NO METER	RETROFIT
4235	MARSALLA CT	1.0	1) 35' snll - 31' nsll - 7' eec in box (6/12/07)□□2) 21' WEPL o/Marsalla	NO METER	RETROFIT
4240	MARSALLA CT	1.0	22' SNLL - 3' WWPL of Marsalla	NO METER	RETROFIT
4253	MARSALLA CT	1.0	9' EEC or 21' WEPL of Marsalla Ct, 25' SNLL or 37' □□NSPL in C/S bo	NO METER	RETROFIT

Colonia Heights (6M4)					
STREET_#	STREET_NAM	WS_TapSize	WS_CurbSto	(E) Mtr Status	(P) Work
4260	MARSALLA CT	1.0	38' EWPL of Marsalla Ct, 21' SNPL of Lot 145, Back of Sidewalk	NO METER	RETROFIT
4262	MARSALLA CT	1.0	21' WEPL of Marsalla Ct, 29' SNPL of Lot 160, Back of Sidewalk	NO METER	RETROFIT
4265	MARSALLA CT			NO METER	RETROFIT
4267	MARSALLA CT	1.0	15' WEPL, 36' EWPL of Lot 160 on the curve, Back of Sidewalk	NO METER	RETROFIT
6904	MCQUILLAN CR	1.0	25' EWLL, 5' SSC	NO METER	RETROFIT
6905	MCQUILLAN CR	1.0		NO METER	RETROFIT
6908	MCQUILLAN CR	1.0		NO METER	RETROFIT
6909	MCQUILLAN CR	1.0	23' EWLL, 4' NNC in S/P	NO METER	RETROFIT
6912	MCQUILLAN CR	1.0		NO METER	RETROFIT
6913	MCQUILLAN CR	1.0		NO METER	RETROFIT
6917	MCQUILLAN CR	1.0		NO METER	RETROFIT
6921	MCQUILLAN CR	1.0		NO METER	RETROFIT
6925	MCQUILLAN CR	1.0	30 1/2 E of WLL 4' behind sidewalk in S.P	NO METER	RETROFIT
6929	MCQUILLAN CR	1.0		NO METER	RETROFIT
6932	MCQUILLAN CR			NO METER	RETROFIT
6933	MCQUILLAN CR	1.0		NO METER	RETROFIT
6936	MCQUILLAN CR	1.0		NO METER	RETROFIT
6940	MCQUILLAN CR	1.0	33' SNLL, 5' WWC in S/P	NO METER	RETROFIT
6944	MCQUILLAN CR	1.0	37' SNLL 5' WWC in box	NO METER	RETROFIT
6948	MCQUILLAN CR	1.0		NO METER	RETROFIT
6953	MCQUILLAN CR	1.0		NO METER	RETROFIT
6956	MCQUILLAN CR	1.0	25' NSLL-34' SNLL 6' WWCin c/s box (in Plant Strip)	NO METER	RETROFIT
6957	MCQUILLAN CR	1.0		NO METER	RETROFIT
6961	MCQUILLAN CR	1.0		NO METER	RETROFIT
6965	MCQUILLAN CR	1.0	23' EWLL - 24' WELL - 1' SSPL of McQuillan	NO METER	RETROFIT
6968	MCQUILLAN CR			NO METER	RETROFIT
6969	MCQUILLAN CR	1.0	30 NSLL, 6' EEC of McQuillan Cir in box	NO METER	RETROFIT
6973	MCQUILLAN CR	1.0	25' EWLL - 5' SSC in C/S box	NO METER	RETROFIT
6976	MCQUILLAN CR	1.0		NO METER	RETROFIT
6977	MCQUILLAN CR	1.0		NO METER	RETROFIT
6980	MCQUILLAN CR	1.0	31' EWLL - 1 1/2' Behind Sidewalk	NO METER	RETROFIT
6981	MCQUILLAN CR	1.0		NO METER	RETROFIT
6984	MCQUILLAN CR	1.0		NO METER	RETROFIT
6985	MCQUILLAN CR	1.0	25' EWLL, 6' SSC in box	NO METER	RETROFIT
6989	MCQUILLAN CR	1.0		NO METER	RETROFIT
8005	MERCED AV	1.0	1) 1' WELL - 1' SSPL in c/s box (9/5/06)□□2) 1' WELL - 1' NNPL (8/31	NO METER	RETROFIT
8015	MERCED AV	1.0	2' EWLL - 43' WELL - 1' SSPL of Merced Avenue	NO METER	RETROFIT
8021	MERCED AV	1.0	48' WWC of Power Inn, 7' NNC Merced in S/P	NO METER	RETROFIT
7900	NAPA AV			NO METER	RETROFIT

Colonia Heights (6M4)					
STREET_#	STREET_NAM	WS_TapSize	WS_CurbSto	(E) Mtr Status	(P) Work
7900	NAPA AV			NO METER	RETROFIT
5183	NELSON ST		14' WELL - 6' NNC of Nelson Street	NO METER	RETROFIT
5187	NELSON ST			NO METER	RETROFIT
6501	NIELSEN WY			NO METER	RETROFIT
6530	NIELSEN WY			NO METER	RETROFIT
6540	NIELSEN WY	1.0	34' EWLL, 6' SNPL in box	NO METER	RETROFIT
6541	NIELSEN WY	1.0	19'WELl, 34'EWLL, 7'NNC of Nielson Wy in S/P	NO METER	RETROFIT
6571	NIELSEN WY	1.0	44' WELL - 3' NNPL of Nielsen in S/P	NO METER	RETROFIT
6591	NIELSEN WY	1.0	1' NNPL of Nielsen Way	NO METER	RETROFIT
6606	NIELSEN WY			NO METER	RETROFIT
6618	NIELSEN WY		31 1/2' SNLL, 7' WWC of Nielsen in Stand Pipe	NO METER	RETROFIT
6626	NIELSEN WY	1.0	31'SNLL-7' WWC of Nielsen way	NO METER	RETROFIT
6632	NIELSEN WY			NO METER	RETROFIT
6642	NIELSEN WY	1.0	31' SNLL, 5' NNC	NO METER	RETROFIT
6648	NIELSEN WY			NO METER	RETROFIT
6654	NIELSEN WY			NO METER	RETROFIT
6662	NIELSEN WY	1.0	5' SSC at South end of cul de sac, 32' WELL or 36' W of □□fence for 6	NO METER	RETROFIT
0	POWER INN RD			NO METER	RETROFIT
0	POWER INN RD			NO METER	RETROFIT
3030	POWER INN RD			NO METER	RETROFIT
3100	POWER INN RD			NO METER	RETROFIT
3150	POWER INN RD			NO METER	RETROFIT
3615	POWER INN RD	1.5	137' eec o/PowerInn Rd. - 39' nsc o/Romona (8/26/06)	NO METER	RETROFIT
3915	POWER INN RD			NO METER	RETROFIT
3925	POWER INN RD			NO METER	RETROFIT
4024	POWER INN RD	1.0	41' WWC of Power Inn, 91' EWLL, 6' NNC of Carlton	NO METER	RETROFIT
4150	POWER INN RD	1.0	204' WWC Power Inn - 26' NSC Amador	NO METER	RETROFIT
4401	POWER INN RD	1.0	3' WELL or 150' EEC of DI in Power Inn, 6' SSPL of □□Alpine	NO METER	RETROFIT
4600	POWER INN RD			NO METER	RETROFIT
4751	POWER INN RD		7' EWLL, 8' SNLL	NO METER	RETROFIT
0	RAILROAD AV			NO METER	RETROFIT
0	RAILROAD AV			NO METER	RETROFIT
0	RAILROAD AV			NO METER	RETROFIT
3300	RAMONA AV	1.0	72' SNLL, 6' WWC	NO METER	RETROFIT
3304	RAMONA AV	1.0	72' SNLL - 6' WWC of Ramona Ave	NO METER	SERVICE
3308	RAMONA AV			NO METER	RETROFIT
3316	RAMONA AV	1.0	4' NSLL - 3' WWPL of Ramona Avenue	NO METER	RETROFIT
3562	RAMONA AV			NO METER	RETROFIT
3715	RAMONA AV			NO METER	RETROFIT

Colonia Heights (6M4)					
STREET_#	STREET_NAM	WS_TapSize	WS_CurbSto	(E) Mtr Status	(P) Work
7949	RAMONA AV			NO METER	RETROFIT
3309	REDDING AV	1.0	2'SNLL of 3309 Redding Ave- 1' EEC of Redding Ave in s/p	NO METER	RETROFIT
3311	REDDING AV	1.0	5 1/2' NSLL - 6" EEC of Redding Ave	NO METER	RETROFIT
3315	REDDING AV	1.0	10' NSPL of Lot - 1' EEC of Redding	NO METER	RETROFIT
3319	REDDING AV	1.0	21' SNLL, 9' EEC	NO METER	RETROFIT
3321	REDDING AV	1.0	23' NSLL, 9' EEC	NO METER	RETROFIT
3511	REDDING AV			NO METER	RETROFIT
3541	REDDING AV			NO METER	RETROFIT
3591	REDDING AV			NO METER	RETROFIT
3601	REDDING AV			NO METER	RETROFIT
3651	REDDING AV			NO METER	RETROFIT
3663	REDDING AV	1.0		NO METER	RETROFIT
3669	REDDING AV	1.0		NO METER	RETROFIT
3675	REDDING AV	1.0	5' EEC, 7' SNLL in box	NO METER	RETROFIT
3681	REDDING AV	1.0		NO METER	RETROFIT
3687	REDDING AV	1.0		NO METER	RETROFIT
3693	REDDING AV	1.0		NO METER	RETROFIT
3697	REDDING AV			NO METER	RETROFIT
3751	REDDING AV	1.0		NO METER	RETROFIT
3841	REDDING AV	1.0		NO METER	RETROFIT
7060	RETA AV	1.0	32' SSC of Reta Ave, 5' EEC of McQuillan in s/p	NO METER	RETROFIT
7061	RETA AV	1.0		NO METER	RETROFIT
7070	RETA AV	1.0		NO METER	RETROFIT
7071	RETA AV	1.0		NO METER	RETROFIT
7400	SAN JOAQUIN ST			NO METER	RETROFIT
7500	SAN JOAQUIN ST	1.0		NO METER	RETROFIT
5	SUBURBAN CT			NO METER	RETROFIT
9	SUBURBAN CT			NO METER	RETROFIT
16	SUBURBAN CT			NO METER	RETROFIT
20	SUBURBAN CT			NO METER	RETROFIT
3900	W RAILROAD AV			NO METER	RETROFIT
4250	W RAILROAD AV	1.5	WV: 26'SNLL, 76'NSLL of 4241 77th St., 5'EEC of 77th St.	NO METER	RETROFIT
				NO METER	RETROFIT

JJ18

City of SACRAMENTO Department of Utilities

Map Created: 3/21/2014

0 50 100 200 Feet

JJ17 | II18 | KK18 | JJ19

WATER MAP 2014

CITY OF SACRAMENTO

THE CITY OF SACRAMENTO MAKES NO WARRANTY OR REPRESENTATION, EXPRESS OR IMPLIED, AS TO THE ACCURACY OR COMPLETENESS OF THE INFORMATION AND DATA ON THIS MAP. BY USING THIS MAP, THE USER RELEASES THE CITY OF SACRAMENTO FROM ANY LIABILITY WHATSOEVER FOR ANY LOSS, EXPENSE, DAMAGE OR OTHER LIABILITY ARISING FROM ANY INTERPRETATION OR OTHER USE OF THIS INFORMATION AND DATA.

JJ18

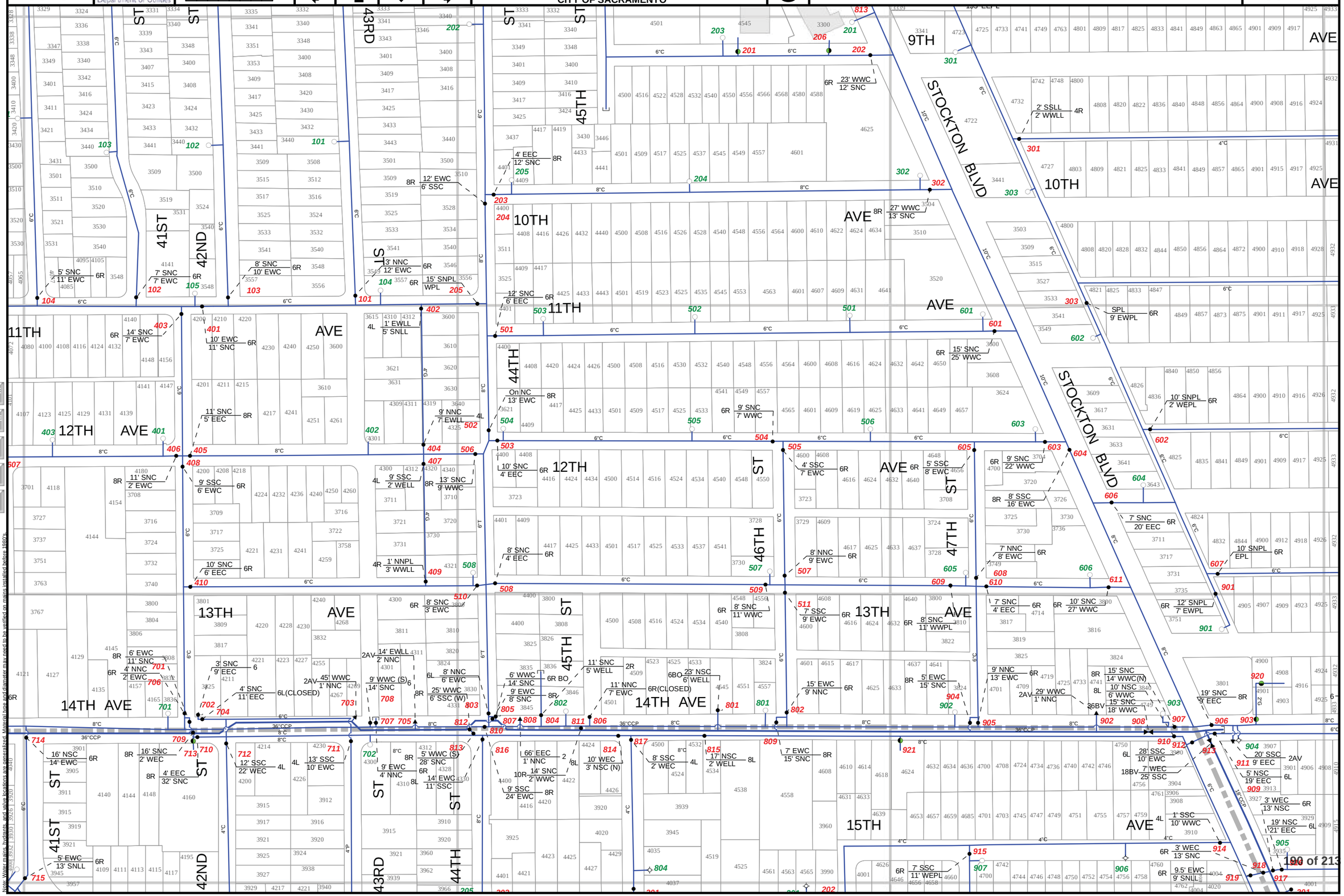

T-MAIN / AGE MAPS

W-PRESSURE MAPS

W-AERIAL MAPS

SWR/DRN MAPS

FIBER MAPS

INTRANET MAP LINKS

Note: Water mains, hydrants, and valve locations are generated. Material type and diameter may need to be verified on mains installed before 1990's.

VALVES								
New ID	Old ID	Old Map	SizeOpen	Type	Turns	SVC Type	Location	SVC Address
101	71	31	6R	GTVLV			3' NNC 11th Ave. - 12' EWC 43rd St.	
102	48	31	6R	GTVLV			7' SNC 11th Ave. - 7' EWC 41st St.	
103	58	31	6R	GTVLV			8' SNC 11th Ave. - 10' EWC 42nd St. (N)	
104	47	31	6R	GTVLV			5' SNC 11th Ave. - 11' EWC San Jose Way	
201	255	31	6R	SVVLV			288' WC Stockton Blvd - 10' SNC 9th Ave - 1' E of hydrant 203	
202	114	31	6R	GTVLV			12' SNC 9th Ave. - 23' WWC Stockton Blvd.	
203	83	31	8R	GTVLV			12' SNC 10th Ave. - 4' EEC 44th St.	
204	82	31	8R	GTVLV			12' EWC 10th Ave. - 6' SSC 44th St.	
205	84	31	6R	GTVLV			15' SNPL 11th Ave (W) - On WPL 44th St.	
206			6L	SVVLV		FS	10' SNC of 9th Ave - 111' WWC of Stockton Blvd	3300 Stockton Blvd
301	128	31	4R	GTVLV			2' SSLL - 2' WWLL 4732 9th Ave	
302	113	31	8R	GTVLV			13' SNC 10th Ave. - 27' WWC Stockton Blvd.	
303	129	31	6R	GTVLV			On SPL Alley (10th & 11th Aves.) - 9' EWPL Alley (Stockton Blvd. & 50th St.)	
401	59	31	6R	GTVLV			11' SNC 11th Ave. - 10' EWC 42nd St. (S)	
402	70	31	4L WE	GTVLV			1' EWLL - 5' SNLL 3600 44th St.	
403	60	31	6R	GTVLV			14' SNC 11th Ave. - 7' EWC 42nd St. (S)	
404	69	31	4L	GTVLV			9' NNC 12th Ave. - 7' EWLL 4319 12th Ave.	
405	62	31	8R	GTVLV			11' SNC 12th Ave. - 5' EEC 42nd St.	
406	61	31	8R	GTVLV			11' SNC 12th Ave. - 2' EWC 42nd St.	
407	68	31	4L WE	GTVLV			9' SSC 12th Ave. - 2' WELL 4312 12th Ave.	
408	63	31	6R	GTVLV			9' SSC 12th Ave. - 6' EWC 42nd St.	
409	67	31	4R	GTVLV			1' NNPL 13th Ave. - 3' WWLL 4319 13th Ave.	
410	64	31	6R	GTVLV			10' SNC 13th Ave. - 6' EEC 42nd St.	
501	85	31	6R	GTVLV			12' SNC 11th Ave. - 6' EEC 44th St.	
502	86	31	8R	GTVLV			On NC 12th Ave. (E) - 13' EWC 44th St.	
503	88	31	6R	GTVLV			10' SNC 12th Ave. (E) - 4' EEC 44th St.	
504	99	31	6R	GTVLV			9' SNC 12th Ave. - 7' WWC 46th St.	
505	98	31	6R	GTVLV			4' SSC 12th Ave. - 7' EWC 46th St.	
506	87	31	8R	GTVLV			13' SNC 12th Ave. (W) - 9' WWC 44th St.	
507	97	31	6R	GTVLV			8' NNC 13th Ave. - 9' EWC 46th St.	
508	91	31	6R	GTVLV			8' SNC 13th Ave. (E) - 4' EEC 44th St.	
509	96	31	6R	GTVLV			8' SNC 13th Ave. - 11' WWC 46th St.	
510	89	31	6R	GTVLV			8' SNC 13th Ave. (W) - 3' EWC 44th St.	
511	104	31	6R	GTVLV			7' SSC 13th Ave. - 9' EWC 46th St.	
601	112	31	6R	GTVLV			15' SNC 11th Ave. - 25' WWC Stockton Blvd.	
602	130	31	6R	GTVLV			10' SNPL Alley (11th & 12th Aves.) - 2' WEPL Alley (Stockton Blvd. & 50th St.)	
603	111	31	6R	GTVLV			9' SNC 12th Ave. - 22' WWC Stockton Blvd.	
604	110	31	8R	GTVLV			8' SSC 12th Ave. - 16' EWC Stockton Blvd.	
605	100	31	6R	GTVLV			5' SSC 12th Ave. - 8' EWC 47th St.	
606	109	31	6R	GTVLV			7' SNC 12th Ave. (E) - 20' EEC Stockton Blvd.	
607	131	31	6R	GTVLV			10' SNPL Alley (12th & 13th Aves.) - On EPL Alley (Stockton Blvd. & 50th St.)	
608	101	31	6R	GTVLV			7' NNC 13th Ave. - 8' EWC 47th St.	
609	103	31	6R	GTVLV			8' SNC 13th Ave. - 11' WWPL 47th St.	
610	102	31	6R	GTVLV			7' SNC 13th Ave. - 4' EEC 47th St.	
611	108	31	6R	GTVLV			10' SNC 13th Ave. - 27' WWC Stockton Blvd.	
612	132	31	6R	GTVLV			12' SNPL Alley - 7' EWPL Alley (Stockton Blvd. & 50th St.)	
701	65	31	6R	GTVLV			4' NNC 14th Ave. - 2' EWC 42nd St. (N)	
702	240	31	6BO	BLVLV			3' SNC 14th Ave. - 9' EEC 42nd St. (N)	
703	171	31	2AV	ARVLV			45' WWC 43rd St. - 1' NNC 14th Ave.	
704	241	31	6L(CLOSED)	GTVLV			4' SNC 14th Ave. - 11' EEC 42nd St. (N) (closed)	
705	173	31	2AV	ARVLV			14' EWLL #4311 - 2' NNC 14th Ave.	
706	170	31	8R	GTVLV			6' EWC 42nd St. - 11' SNC 14th Ave.	
707	66	31	6R	GTVLV			9' EWC 43rd St. - 4' NNC 14th Ave.	
708	172	31	6BO	BLVLV			9' WWC (S) 43rd St. - 14' SNC 14th Ave.	
709	194	31	8R	GTVLV			16' SNC 14th Ave. - 2' WEC 42nd St. (N)	
710	195	31	8R	GTVLV			4' EEC 42nd St. (N) - 32' SNC 14th Ave.	
711	200	31	4L	GTVLV			13' SSC 43rd St. - 10' EWC 14th Ave.	
712	196	31	4L	GTVLV			12' SSC 14th Ave. - 22' WEC 42nd St. (S)	
713	242	31	8R	SVVLV		FS	Fire svc - 7' SSC 14th Ave. - 2' WEC 42nd St. (N)	
714	36	31	6R	GTVLV			21' NSPL 14th Ave. - 20' EWPL 41st St.	
715	35	31	6R	GTVLV			5' EWC - 13' SNLL 4004 41st St.	
801	177	31	6BO	BLVLV			23'NSC - 6' WELL 4534 14th Ave.	
802	95	31	6R	GTVLV			9' NNC 14th Ave. - 15' EWC 46th St.	
803	92	31	6L	GTVLV			8' NNC 14th Ave. - 6' EWC 44th St.	
804	165	31	2R	GTVLV			11' SNC 14th Ave. - 5' WELL 3845 44th St.	
805	175	31	6R BO	BLVLV			6' WWC 44th St. - 14' SNC 14th Ave. (MH-6' E of GV)	
806	94	31	6R(CLOSED)	GTVLV			11' NNC 14th Ave. - 7' EWC 45th St. (Closed--not plugged)	
807	174	31	8R	GTVLV			9' EWC 44th St. - 8' SNC 14th Ave.	
808	176	31	2AV	ARVLV			66' EEC 44th St. - 1' NNC 14th Ave.	
809	178	31	8R	GTVLV			7' EWC 46th St. - 15' SNC 14th Ave.	
810	93	31	8R	GTVLV			9' SSC 14th Ave. - 24' EWC 44th St.	
811	227	31	10R	GTVLV			14' SNC 14th Ave. - 2' WWC 45th St.	
812	190	31	8R	GTVLV			25' WWC 44th St. (N) - 6' SSC (W) 14th Ave.	
813	191	31	8R	GTVLV			5' WWC 44th St. (S) - 28' SNC 14th Ave.	
814	213	31	8L	GTVLV			10' WEC 45th St. - 3' NSC (N)14th Ave.	
815	215	31	8L	GTVLV			17' NSC - 2' WELL 4534 14th Ave.	
816	201	31	8L	GTVLV			14' EWC 44th St. - 11' SSC 14th Ave.	
817	214	31	4L	GTVLV			2' WEC 45th St. - 8' SSC 14th Ave.	
902	180	31	2AV	ARVLV			29' WWC Stockton Blvd. (N) - 1' NNC 14th Ave.	
903	254	31	2R	SVVLV			107' EEC Stockton Blvd - 5' NNC 14th Ave	
904	179	31	8R	GTVLV			5' EWC 47th St. - 15' SNC 14th Ave.	
905	105	31	6R	GTVLV			9' NNC 14th Ave. - 13' EWC 47th St.	
906	107	31	8R	GTVLV			19' SNC 14th Ave. (E) - 9' EEC Stockton Blvd.	
907	106	31	8R	GTVLV			15' SNC 14th Ave. (W) - 14' WWC Stockton Blvd. (N)	
908	181	31	36BV	BTVLV	99		99 Turns-15' SNC 14th Ave. - 18' WWC Stockton Blvd. (N)	
909	184	31	6L	GTVLV			5' NSC 14th Ave. (E) - 19' EEC Stockton Blvd.	
910	216	31	8L	GTVLV			10' NSC 14th Ave. (W) - 6' WWC Stockton Blvd. (S)	
911	182	31	2AV	ARVLV			20' SSC 14th Ave. - 9' EEC Stockton Blvd. (on radius)	
912	217	31	6L	GTVLV			28' SSC 14th Ave. (W) - 10' EWC Stockton Blvd. (S)	
913	167	31	18BV	BTVLV	18		18 Turns - 7' WEC Stockton Blvd - 25' SSC 14th Ave. (E)	
914	218	31	4L	GTVLV			1' SSC 15th Ave. - 10' WWC Stockton Blvd.	
915	199	31	6R	GTVLV			7' SSC 15th Ave. - 11' WEPL 47th St.	
916	219	31	6L	GTVLV			19' NSC 15th Ave. - 21' EEC Stockton Blvd.	
917	193	31	6R	GTVLV			3' WEC Stockton Blvd. (S) - 13' NSC 15th Ave.	
918	192	31	6R	GTVLV			3' WEC Stockton Blvd. - 13' SNC 15th Ave.	
919	237	31	6R	GTVLV			9' EWC Stockton Blvd. - 9' SNLL 4020 Stockton Blvd.	

City of SACRAMENTO Department of Utilities

Map Created: 5/21/2014

0 50 100 200 Feet

JJ20 | II21 | KK21 | JJ22

WATER MAP 2014

CITY OF SACRAMENTO

THE CITY OF SACRAMENTO MAKES NO WARRANTY OR REPRESENTATION, EXPRESS OR IMPLIED, AS TO THE ACCURACY OR COMPLETENESS OF THE INFORMATION AND DATA ON THIS MAP. BY USING THIS MAP, THE USER RELEASES THE CITY OF SACRAMENTO FROM ANY LIABILITY WHATSOEVER FOR ANY LOSS, EXPENSE, DAMAGE OR OTHER LIABILITY ARISING FROM ANY INTERPRETATION OR OTHER USE OF THIS INFORMATION AND DATA.

JJ21

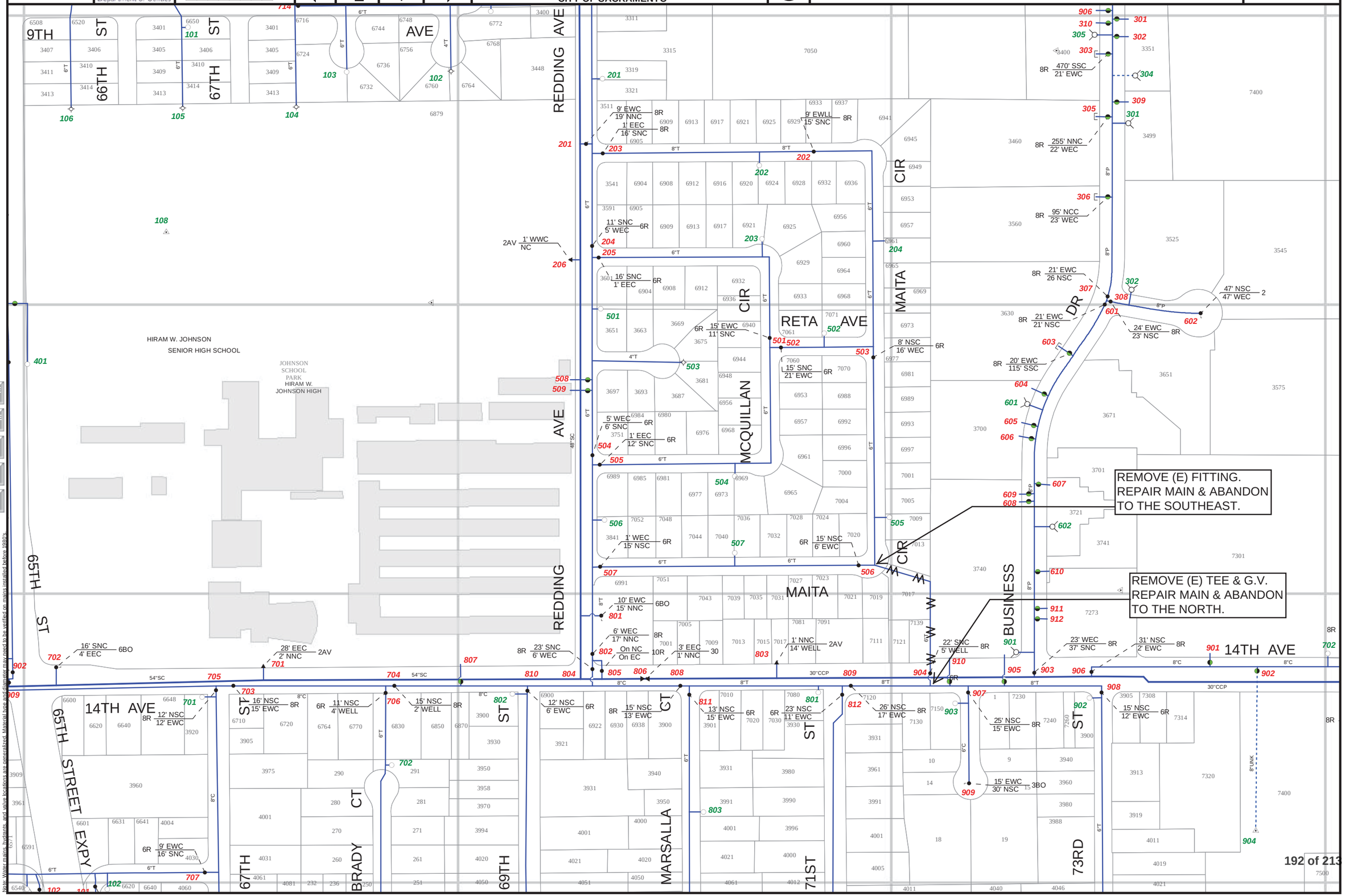

INTRANET MAP LINKS

T-MAIN / AGE MAPS

W-PRESSURE MAPS

W-AERIAL MAPS

SWR/DRN MAPS

FIBER MAPS

Hydrant Info.

Note: Water mains, hydrants, and valve locations are generalized. Material type and diameter may need to be verified on mains installed before 1930s.

VALVES

New ID	Old ID	Old Map	SizeOpen	Type	Turns	SVC Type	Location	SVC Address
201	51	41	8R	GTVLV			9' EWC Redding Av - 19' NNC Maita Cir (N)	
202	17	41	8R	GTVLV			9' EWLL 6933 Maita Cir - 15' SNC Maita Cir (INLINE)	
203	16	41	8R	GTVLV			1' EEC Redding Av - 16' SNC Maita Cir	
204	18	41	6R	GTVLV			11' SNC McQuillan Cir - 5' WEC Redding Av	
205	19	41	6R	GTVLV			16' SNC McQuillan Cir - 1' EEC Redding Av	
206	50	41	2AV	ARVLV			1' WWC Redding Av - in line with NC McQuillan Cir	
301	168	41	4R	SVVLV		DS	D.S. to 3351 Business Dr - 119' SNLL & 21' WEC Business Drive	3351 Business Drive
302	169	41	6R	SVVLV		FS	F.S. to 3351 Business Dr - 19' NS wall & 22' WEC Business Drive	3351 Business Drive
303	141	41	8R	SVVLV			24' South of hydrant 302 - 21' EWC Business Dr	
305	142	41	8R	SVVLV		FS	6' North of hydrant 301 - 22' WEC Business Dr	
306	143	41	8R	SVVLV		FS	95' NNC Business Ct - 23' WEC Business Dr	
307	144	41	8R	GTVLV			21' EWC Business Dr - 26' NSC Business Dr	
308	146	41	8R	GTVLV			24' EWC Business Dr - 23' NSC Business Ct	
309	0	41	6R	SVVLV			54' SNLL 3499 - 21' WEC	3499 Business Drive
310	0	31	6R	SVVLV		FS	330' SSC OF SAN JOAQUIN - 22' EWC OF BUSINESS DR	3400 Business Drive
501	20	41	6R	GTVLV			15' EWC McQuillan Cir - 11' SNC Reta Av	
502	21	41	6R	GTVLV			15' SNC Reta Av - 21' EWC McQuillan Cir	
503	22	41	6R	GTVLV			8' NSC Reta Av - 16' WEC Maita Cir	
504	23	41	6R	GTVLV			5' WEC Redding Av - 6' SNC McQuillan Cir	
505	24	41	6R	GTVLV			1' EEC Redding Av - 12' SNC McQuillan Cir	
506	26	41	6R	GTVLV			15' NSC Maita Cir - 6' EWC Maita Cir	
507	25	41	6R	GTVLV			1' WEC Redding Av - 15' NSC Maita Cir	
508	0	41	6R	SVVLV		FS	16' SSC OF CT. - 7' WEC OF REDDING AVE	
509	0	41	6R	SVVLV		FS	21' SSC OF CT. - 7' WEC OF REDDING AVE	
601	145	41	8R	GTVLV			21' EWC Business Dr - 21' NSC Business Ct	
602	148	41	2BO	BLVLV			47' NSC Business Ct - 47' WEC Business Ct	
603	147	41	8R	SVVLV		FS	20' EWC Business Dr - 115' SSC Business Ct	
604	165	41	8R	SVVLV		FS	F.S. to 3700 Business Dr - 39' SNLL & 23' EWC of 3700 Business Drive - 13' N of hyd 601	3700 Business Drive
605	166	41	6R	SVVLV		FS	F.S. to 3700 Business Dr - 22' EWC Business Drive - 59' South of hydrant 601	3700 Business Drive
606	167	41	8R	SVVLV		FS	F.S. to 3700 Business Dr - 22' EWC Business Drive - 125' South of hydrant 601	3700 Business Drive
607	158	41	4R	SVVLV		DS	22' WEC Business Dr - 394' NNC 14th Ave - 55' N of S wall 3721 Business Dr	3721 Business Drive
608			6R	SVVLV		FS	20' EWC - 46' North of hydrant 602	
609			6R	SVVLV		FS	20' EWC - 60' North of hydrant 602	
610			8R	SVVLV		FS/PVT HYD	20' WEC of Business Dr. - 205' NNC of 14th Ave. (Private Hydrant)	
701	45	41	2AV	ARVLV			28' EEC 67th St - 2' NNC 14th Av (in sdwlk)	
702	189	30	6BO	BLVLV			16' SNC 14th Ave. - 4' EEC 65th St.	
703	29	41	8R	GTVLV			16' NSC 14th Av - 15' EWC 67th St	
704	39	41	8R	GTVLV			15' NSC 14th Av - 2' WELL 6770 14th Av	
705	30	41	8R	GTVLV			12' NSC 14th Av - 12' EWC 67th St	
706	40	41	6R	GTVLV			11' NSC 14th Av - 4' WELL 6770 14th Av	
707	36	41	6R	GTVLV			9' EWC 67th St - 16' SNC Kipping Wy	
801	49	41	6BO	BLVLV			6' EWC Redding Av - 15' NNC 14th Av	
802	48	41	8R	GTVLV			6' WEC Redding Av - 17' NNC 14th Av	
803	61	41	2AV	ARVLV			1' NNC 14th Av - 14' WELL 7017 14th Av	
804	27	41	8R	GTVLV			23' SNC 14th Av - 6' WEC Redding Av	
805	47	41	10R	GTVLV			In line with NC 14th Av - In line with EC Redding Av	
806	46	41	30BV	BTVLV	90		90 turns - 3' EEC Redding Av - 1' NNC 14th Av	
807	114	41	6R	SVVLV		FS	Fire Svc - 17' NSC 14th Av - 126' WWC 69th St	
808	56	41	8R	GTVLV			15' NSC 14th Av - 13' EWC Marsalla Ct	
809	33	41	8R	GTVLV			26' NSC 14th Av - (E) - 17' EWC 71st St	
810	31	41	6R	GTVLV			12' NSC 14th Av - 6' EWC 69th St	
811	57	41	6R	GTVLV			13' NSC 14th Av - 15' EWC Marsalla Ct	
812	32	41	6R	GTVLV			23' NSC 14th Av - (E) - 11' EWC 71st St	
901	70	41	6R	SVVLV		FS	Fire Tap to Market Wholesale - 11' SNC & 109' EWLL 7301 14th Av	7301 14th Ave
902	92	41	8R	SVVLV		FS	156' WELL 7440 14th Av - 16' SNC 14th Av	7440 14th Ave
903	139	41	8R	GTVLV			23' WEC Business Dr - 37' SNC 14th Av	
904	28	41	8R	GTVLV			22' SNC 14th Av - 5' WELL 7139 14th Av	
905	153	41	8R	SVVLV		FS	138' WWC of 73rd St - 138' EEC of Don Merlino Ct.	
906	67	41	8R	GTVLV			31' NSC 14th Av - 2' EWC 73rd St	
907	113	41	8R	GTVLV			25' NSC 14th Av - 15' EWC Don Merlino	
908	34	41	6R	GTVLV			15' NSC 14th Av - 12' EWC 73rd St	
909	116	41	3BO	BLVLV			15' EWC & 30' NSC Don Merlino Cul-de-Sac	
910			6R	SVVLV		FS	25' SNC - 27' EWLL	
911			8R	SVVLV		FS/PVT HYD	20' WEC of Business Dr. - 121' NNC of 14th Ave. (Private Hydrant)	
912			6R	SVVLV		FS	21' WEC of Business Dr. - 91' NNC of 14th Ave.	

HYDRANTS

New ID	Old ID	Old Map	Make	Type	Pic Code	Valve Distance	Main Distance	Location
		41		PRIV				
		41		PRIV				
		41		PRIV				
101	3	41	PS	STD	PS3-4G	3' W	5' E	S side 9th Av bet 66th & 67th Sts
102	74	41	WH	WH	3R(3X2 1/2)	Use GV 5_12	End of main	On WPL 6764 9th Av
103	4	41	PS	STD	PS3-4G	11' N	145' S	S side 9th Av - WPL #6732
104	73	41	WH	WH	3R(3X2 1/2)	Use GV 4_5	End of main	SE Cor 3413 67th St - in rear
105	72	41	WH	WH	3R(3X2 1/2)	Use GV 2	End of main	SE Cor 3413 66th St - in ROW
106	71	41	WH	WH	3R(3X2 1/2)	Use GV 1	End of main	SE Cor 3413 65th St - in rear
108	79	41	G	PRIV	G3-4 1/2V(W)	No GV		29' NN wall & 75' WW wall boy's gym (FH E of track)
201	9	41	M	STD	M4-4 1/4G	5' W	8' E	E side Redding Av - NPL 3511 Redding Av
202	10	41	M	STD	M4-4 1/4G	17' N	21' S	S side Maita Cr - EPL 6920 Maita Cr
203	12	41	M	STD	M4-4 1/4G	17' N	21' N	N side McQuillan Cr - EPL 6917 McQuillan Cr
204	13	41	M	STD	M4-4 1/4G	18' W	21' E	E side Maita Cr - SPL 6961 Maita Cr
301	94	41	K	DP	K12-5 1/4K	29' W	30' E	E side Business Dr - SLL 3499 Business Ct
302	95	41	K	DP	K12-5 1/4K	25' S	26' N	NE Cor Business Dr & Business Ct
304	0	41	D	DP		28' W	29' E	9' NSLL 3351
305	93	41	K	DP	K12-5 1/4K	26' E	27' W	353' SSC San Joaquin St - W side Business Dr - In front of 3400
401	37	41	D	STD	D1-4 1/2H	9' N	10' S	E side 65th St - 250' SSC 11th Av - 37' NSLL 3812 65th St

KK21 | City of SACRAMENTO Department of Utilities | Map Created: 2/24/2014 (0 50 100 200 Feet) | KK20 | JJ21 | LL21 | KK22

WATER MAP 2014
CITY OF SACRAMENTO

THE CITY OF SACRAMENTO MAKES NO WARRANTY OR REPRESENTATION, EXPRESS OR IMPLIED, AS TO THE ACCURACY OR COMPLETENESS OF THE INFORMATION AND DATA ON THIS MAP. BY USING THIS MAP, THE USER RELEASES THE CITY OF SACRAMENTO FROM ANY LIABILITY WHATSOEVER FOR ANY LOSS, EXPENSE, DAMAGE OR OTHER LIABILITY ARISING FROM ANY INTERPRETATION OR OTHER USE OF THIS INFORMATION AND DATA.

KK21

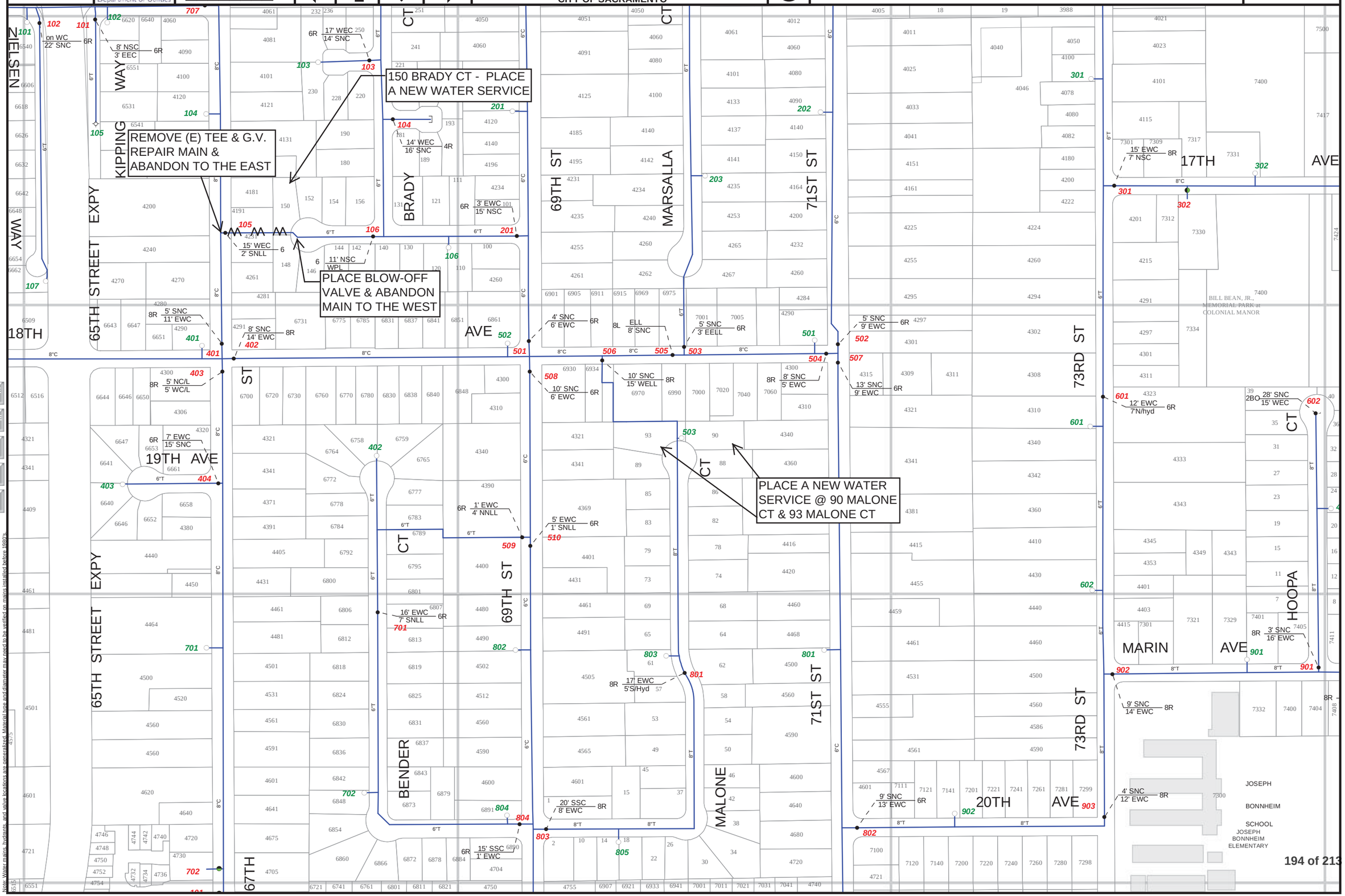

INTRANET MAP LINKS
- T-MAIN / AGE MAPS
- W-PRESSURE MAPS
- W-AERIAL MAPS
- SWR/DRN MAPS
- FIBER MAPS

Hydrant Info.

Note: Water mains, hydrants, and valve locations are generalized. Material type and diameter may need to be verified on minus installed before 1980's.

VALVES

New ID	Old ID	Old Map	SizeOpen	Type	Turns	SVC Type	Location	SVC Address
101	54	41	6R	GTVLV			8' NSC Kipping Wy - 3' EEC Kipping Wy	
102	224	30	6R	GTVLV			on WC Nielsen Way - 22' SNC Nielsen Way	
103	41	41	6R	GTVLV			17' WEC Brady Ct - 14' SNC Brady Ct	
104	42	41	4R	GTVLV			14' WEC Brady Ct - 16' SNC Brady Ct	
105	138	42	6	GTVLV			15' WEC 67th St - 2' SNLL 4231 - 67th St	
106	137	42	6	GTVLV			11' NSC Brady Ct - WPL 140 Brady Ct	
201	41	42	6R	GTVLV			3' EWC 69th St - 15' NSC Brady Ct	
301	25	42	8R	GTVLV			15' EWC 73rd St. - 7' NSC 17th Av	
302			4R	SVVLV		IS	20'EELL OF 7330 17TH AVE. - 6'NSPL OF 17TH AVE.	
401	1	42	8R	GTVLV			5' SNC 18th Av - 11' EWC 67th St	
402	2	42	8R	GTVLV			8' SNC 18th Av - 14' EWC 67th St	
403	3	42	8R	GTVLV			5' NC/L 18th Av - 5' WC/L 67th St	
404	22	42	6R	GTVLV			15' SNC 19th Ave extended - 7' EWC 67th St	
501	8	42	6R	GTVLV			4' SNC 18th Av - 6' EWC 69th St	
502	16	42	6R	GTVLV			5' SNC 18th Av - 9' EWC 71st St	
503	135	42	6R	GTVLV			5' SNC 18th Av - 3' EELL 6975 18th Av	
504	9	42	8R	GTVLV			8' SNC 18th Av - 5' EWC 71st St	
505	136	42	8L	GTVLV			ELL 6975 18th Av - 8' SNC 18th Av	
506	14	42	8R	GTVLV			10' SNC - 15' WELL 6911 18th Av	
507	10	42	6R	GTVLV			13' SNC 18th Av - 9' EWC 71st St	
508	7	42	6R	GTVLV			10' SNC 18th Av - 6' EWC 69th St	
509	20	42	6R	GTVLV			1' EWC - 4' NNLL 4400 69th St	
510	21	42	6R	GTVLV			5' EWC - 1' SNLL 4400 69th St	
601	15	42	6R	GTVLV			12' EWC 4302 73rd St - 7' North of hydrant 601	
602	195	42	2BO	BLVLV			28' SNC Marin Av Cul-de-sac - 15' WEC Hoopa Wy	
701	19	42	6R	GTVLV			16' EWC Bender Ct - 7' SNLL 6813 Bender Ct	
702	201	42	8R	SVVLV		FS	14' NSLL 4752-4750 - 9' EWC 67th St	
801	38	42	8R	GTVLV			17' EWC Malone Ct - 5' South of hydrant 803	
802	13	42	6R	GTVLV			9' SNC 20th Av - 13' EWC 71st St	
803	37	42	8R	GTVLV			20' SSC Bender Ct - 8' EWC - 69th St	
804	18	42	6R	GTVLV			15' SSC Bender Ct - 1' EWC 69th St	
901	194	42	8R	GTVLV			3' SNC Marin Av - 16' EWC Hoppa Wy	
902	23	42	8R	GTVLV			9' SNC 73rd St - 14' EWC 73rd St	
903	17	42	8R	GTVLV			4' SNC 20th Av - 12' EWC 73rd St	

HYDRANTS

New ID	Old ID	Old Map	Make	Type	Pic Code	Valve Distance	Main Distance	Location
101	73	30	G	STD	G6-4 1/2H	18' N	20' S	S side Nielson Way - In front of 6540 Nielsen Way
102	20	41	G	STD	G6-4 1/2H	14' N	20' S	SE Cor Kipping Wy
103	31	41	M	STD	M4-4 1/4G	13' E	End of main	NLL 230 Brady Ct
104	21	41	PS	STD	PS3-4G	11' E	13' W	SLL 4120 67th St
105	76	41	WH	WH	3R(3X2 1/2)	Use GV 54	End of main	E side Kipping - in front of 6501 Kipping
106	35	42	M	STD	M4-4 1/4G	19' N	20' S	S side Brady Ct - ELL 130 69th St
107	80	42	D	STD	D1-4 1/2H	2' N	4' S	E side Nielsen Wy - End of cul-de-sac
201	23	41	PS	STD	PS3-4G	17' S & 5' E	8' W	W side 69th St - SLL #4110
202	26	41	G	STD	G6-4 1/2H	3' E	8' W	NLL #4110 - W side 71st St
203	33	41	MH	STD	MH2-4 1/4H	17' W	20' E	E side Marsalla Ct - NLL 4255
301	28	41	G	STD		11' E	13' W	NLL #4078 - W side 73rd St
302	21	42	PS	STD	PS3-4G	26' S	29' N	On ELL 7331 17th Av - N. side of 17th Ave
401	1	42	PS	STD	P53-4G	10' S	13' N	NW Cor 67th St & 18th Av
402	16	42	G	STD	G6-4 1/2H	10' S	End of main	ELL 6558 Bender Ct
403	13	42	G	STD	G6-4 1/2H	5' E	End of main	SPL 6641 19th Av
501	7	42	K	STD	K11-5 1/4H	8' S	11' N	NW Cor 71st St & 18th Av
502	6	42	PS	STD	PS3-4G	10' S	13' N	NW Cor 69th St & 18th Av
503	32	42	M	STD	M4-4 1/4G	1' W	3' E	6' EWLL 90 Malone Ct
601	12	42	PS	STD	PS3-4G	13' E	16' W	W side 73rd St - 1' NSLL 4302 73rd St
602	11	42	W	STD	W1-5 1/4H	14' E	17' W	2' NNLL 4460 73rd St
701	2	42	PS	STD	PS3-4G	10' E	13' W	W side 67th St - NLL #4500
702	15	42	G	STD	G5-4H	18' E	21' W	W side Bender Ct - SLL 6842 Bender Ct
801	8	42	PS	STD	PS3-4G	8' E	11' W	W side 71st St - NLL 4500 71st St
802	5	42	PS	STD	PS3-4G	4' E	7' W	W side 69th St - NLL 4500
803	31	42	M	STD	M4-4 1/4G	19' E	21' W	W side Malone Ct
804	14	42	G	STD	G6-4 1/2H	18' S	21' N	NW Cor Bender Ct & 69th St
805	80	42	D	STD	D1-4 1/2H	2' N	4' S	E side Nielsen Wy - E side of cul-de-sac
901	20	42	I	STD	I7-4 1/2H	7' S	10' N	S. side - ELL 18 Malone Ct.
902	10	42	PS	STD	PS3-4G	11' S	14' N	N side 20th Av - in front of 7201

KK21

Legend

Water Mains

- City owned
- Owned by another water agency; Privately owned
- Abandoned Mains

Valves

- Gate Valve; Gate Valve with Bypass
- Butterfly Valve
- Blow Off Valve
- Air Release Valve
- Check Valve
- Service Valve
- Wheel Valve
- Abandoned Valves

Fittings

- End of Main
- Reducer

Hydrants

- Double Pumper Hydrant
- Private Hydrant (serviced by Owner)
- Standard Hydrant
- Wharf Hydrant

- Wells
- Manholes
- Reservoirs
- Water Pump
- Water Meter Box
- Water Sampler
- Water Test Station
- Breakpoint
- Water Enclosed Storage Facility

Cadastral

- Lot Lines
- Right of Way Line
- Building Outline
- City of Sacramento Boundary
- Rails
- Stream Banklines
- Major Levee
- Hold Harmless Agreement

ABBREVIATIONS

NE	NORTH OF EAST
SN	SOUTH OF NORTH
NS	NORTH OF SOUTH
NNC	NORTH OF NORTH CURB
SSC	SOUTH OF SOUTH CURB
NSC	NORTH OF SOUTH CURB
SNC	SOUTH OF NORTH CURB
WWC	WEST OF WEST CURB
EEC	EAST OF EAST CURB
EWC	EAST OF WEST CURB
WEC	WEST OF EAST CURB
SC	SOUTH CURB
NC	NORTH CURB
EC	EAST CURB
WC	WEST CURB
NNLL	NORTH OF NORTH LOT LINE
SSLL	SOUTH OF SOUTH LOT LINE
EELL	EAST OF EAST LOT LINE
WWLL	WEST OF WEST LOT LINE
NSLL	NORTH OF SOUTH LOT LINE
SNLL	SOUTH OF NORTH LOT LINE
EWLL	EAST OF WEST LOT LINE
WELL	WEST OF EAST LOT LINE
NNPL	NORTH OF NORTH PROPERTY LINE
SSPL	SOUTH OF SOUTH PROPERTY LINE
EEPL	EAST OF EAST PROPERTY LINE
WWPL	WEST OF WEST PROPERTY LINE
NSPL	NORTH OF SOUTH PROPERTY LINE
SNPL	SOUTH OF NORTH PROPERTY LINE
EWPL	EAST OF WEST PROPERTY LINE
WEPL	WEST OF EAST PROPERTY LINE
NPL	NORTH PROPERTY LINE
SPL	SOUTH PROPERTY LINE
EPL	EAST PROPERTY LINE
WPL	WEST PROPERTY LINE
(N)(S)(E)(W)	LOOKING THIS PARTICULAR DIRECTION
C/L	CENTERLINE
SVC	SERVICE
L	LINE
LH	LEFT HAND
RH	RIGHT HAND
Cor.	CORNER

PIPE MATERIAL

C	Cast Iron
T	Transite Pipe
G	Galvanized
P	Plastic
CU	Copper
W	Wrought Iron
S	Steel
BT	Boiler Tubing
WS	Welded Steel
RS	Riveted Steel
LB	Steel Lockbar Joint
SM	Steel Mortar Lined and Coated
SC	Steel Coal-Tar Coated and Lined
SMC	Steel Mortar Lined and Coal-Tar Coated
SMA	Steel Cement Mortar Lined and Asphalt Mastic Coated
CCP	Concrete Cylinder Pipe
D	Ductile Iron
RW	Redwood
UNK	Unknown

APPENDIX B

Standard Drawing No. W-105

Standard Drawing No. W-402HB

Standard Drawing No. W-402PR

Standard Drawing No. W-402R

Standard Drawing No. W-403

Standard Drawing No. W-507R

Standard Drawing No. W-515

Drawing No. XXX_30p

Drawing No. YYY_Op1

Drawing No. YYY_Op3

Measurement Examples

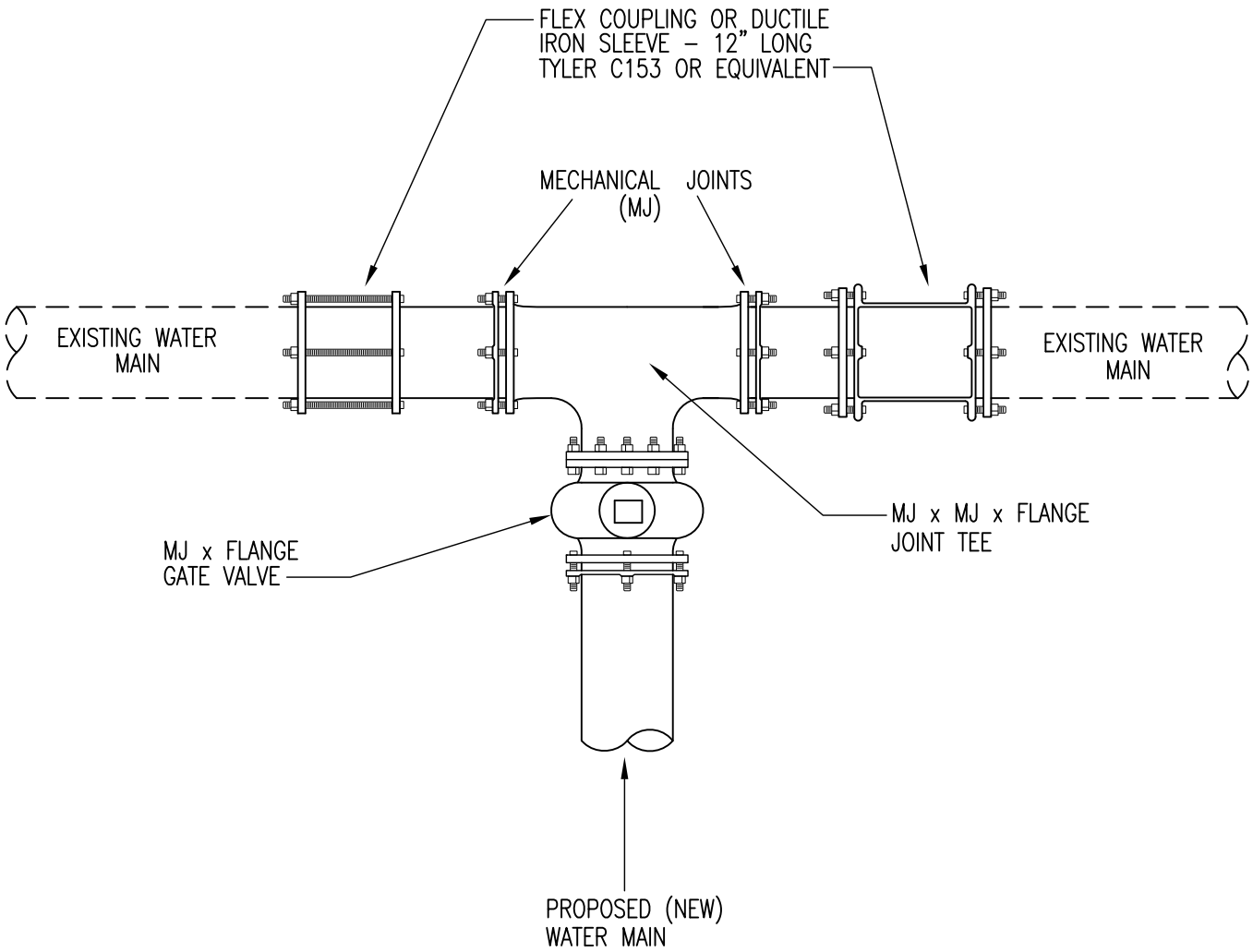

NOTE:
ALL INSTALLATIONS REQUIRE A SHUT DOWN AND DEWATERING OF THE EXISTING WATER MAIN.

REV.	DATE	DESCRIPTION
△		
△		
△		

CITY OF SACRAMENTO DEPARTMENT OF UTILITIES	WATER MAIN "CUT-IN" INSTALLATIONS	APPR'D BY: NO SCALE DATE: MAY 2007 DWG. NO. W-105

R:\Utilstds_New_Std_Details\Water_Utilities\W-105

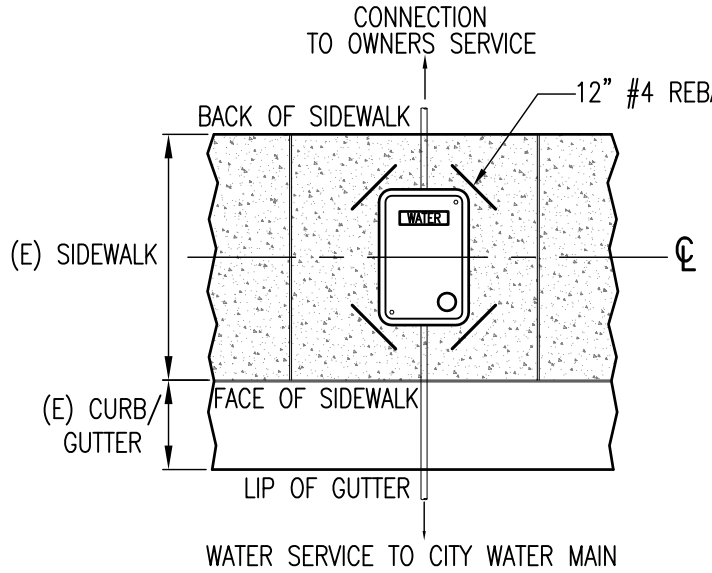

SIDEWALK INSTALLATION

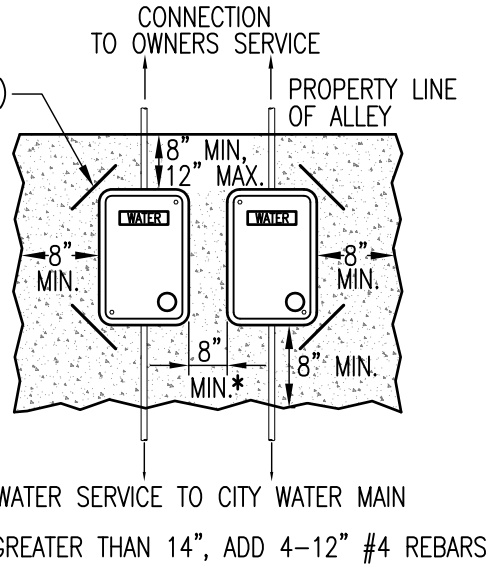

ALLEY INSTALLATION

PLAN VIEW

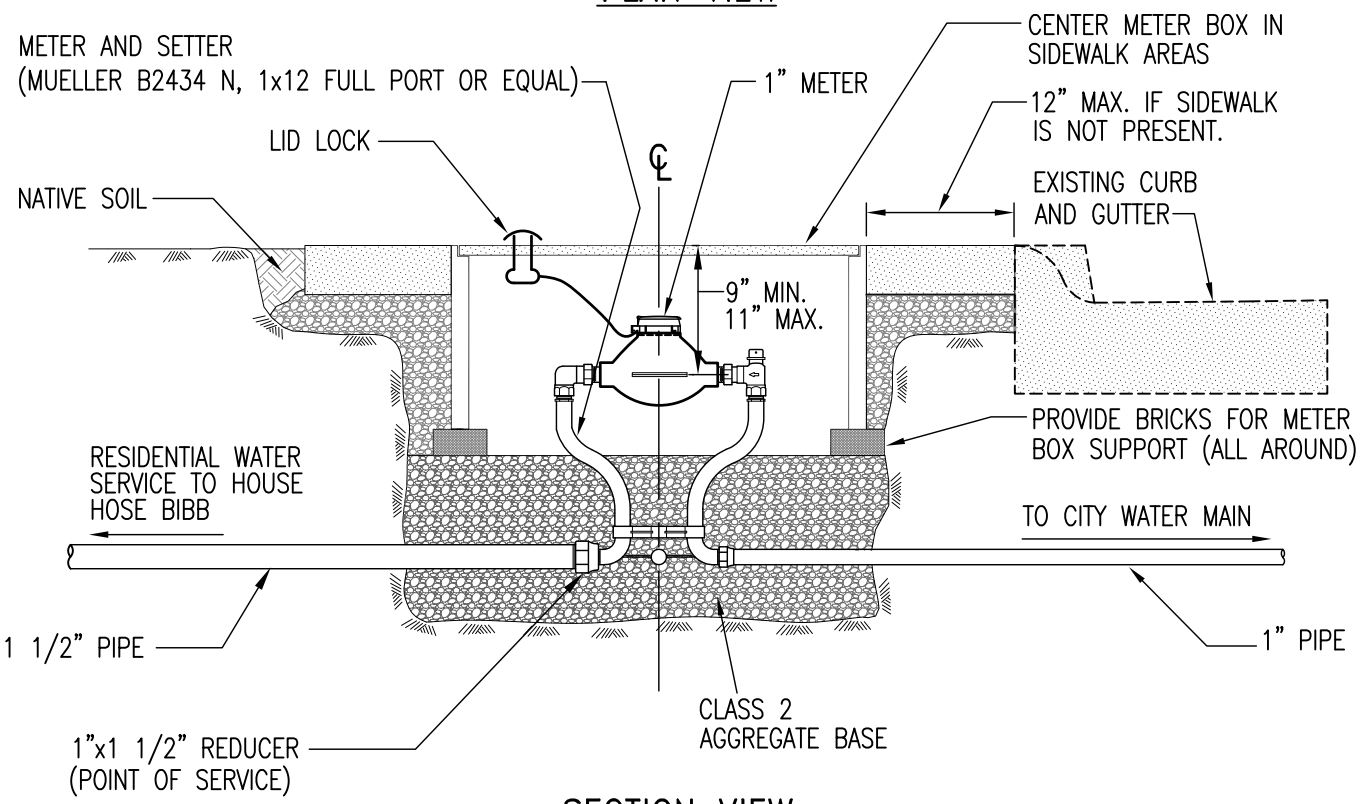

SECTION VIEW

NOTES:

1. STRAIGHT METER VALVE MAY BE USED IN LIEU OF METER SETTER ON SERVICES WITH 20" OR LESS OF COVER.

INSTALLATION OF HYBRID WATER SERVICES W/METER BOX AND METER WITHIN EXISTING SIDEWALKS

REV.	DATE	DESCRIPTION
△		
△		
△		

CITY OF SACRAMENTO **DEPARTMENT OF UTILITIES**	INSTALL. OF HYBRID WTR SERV W/MET BOX AND METER WITHIN EXIST. SIDEWALKS	APPR'D BY: _____ NO SCALE DATE: DWG. NO. **W-402HB**

R:\Utilstds_New_Std_Details\Meter_Retrofit_Details\W402R

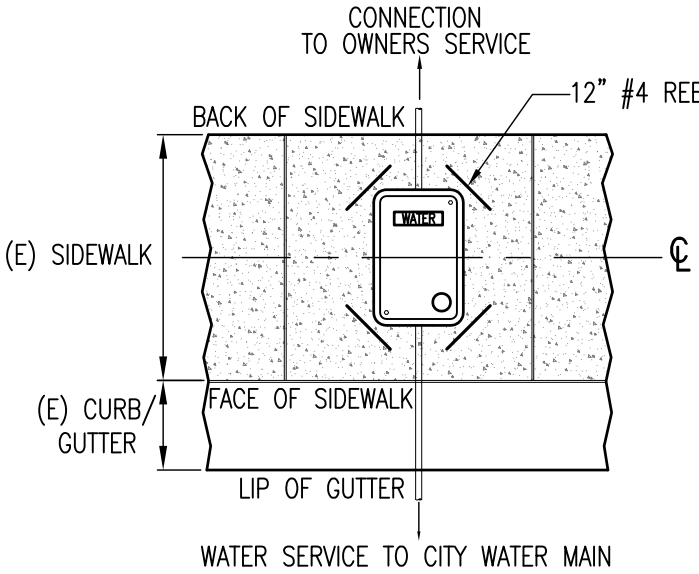

SIDEWALK INSTALLATION

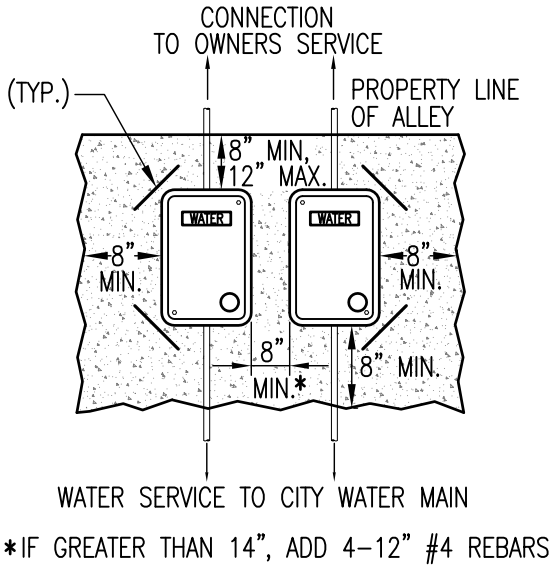

ALLEY INSTALLATION

PLAN VIEW

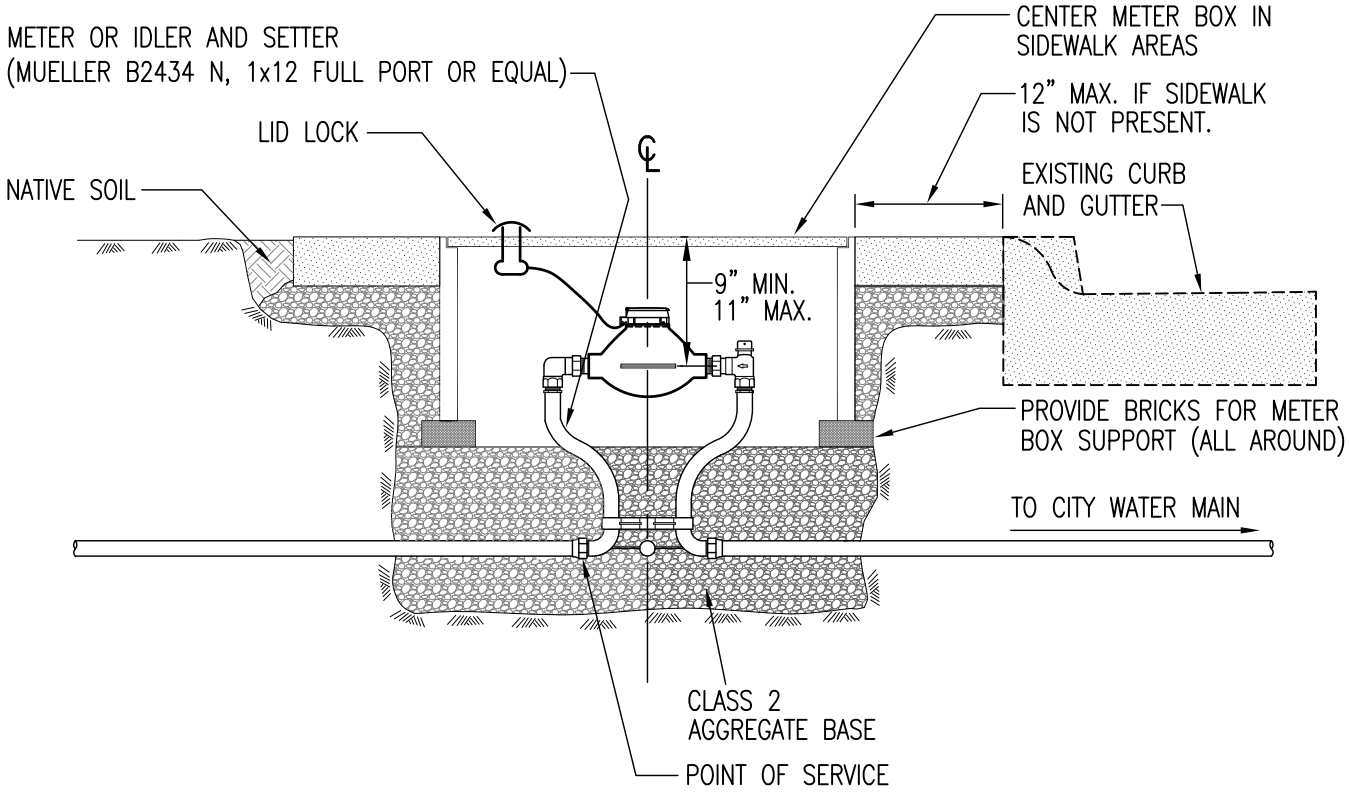

SECTION VIEW

NOTES:

1. STRAIGHT METER VALVE MAY BE USED IN LIEU OF METER SETTER ON SERVICES WITH 20" OR LESS OF COVER.

REV.	DATE	DESCRIPTION
△		
△		
△		

CITY OF SACRAMENTO
DEPARTMENT OF UTILITIES

1-INCH METERED WATER SERVICE
WITHIN EXISTING SIDEWALK

APPR'D BY: _____ NO SCALE
DATE: DWG. NO. **W-402PR**

R:\Utilstds_New_Std_Details\Meter_Retrofit_Details\W402PR

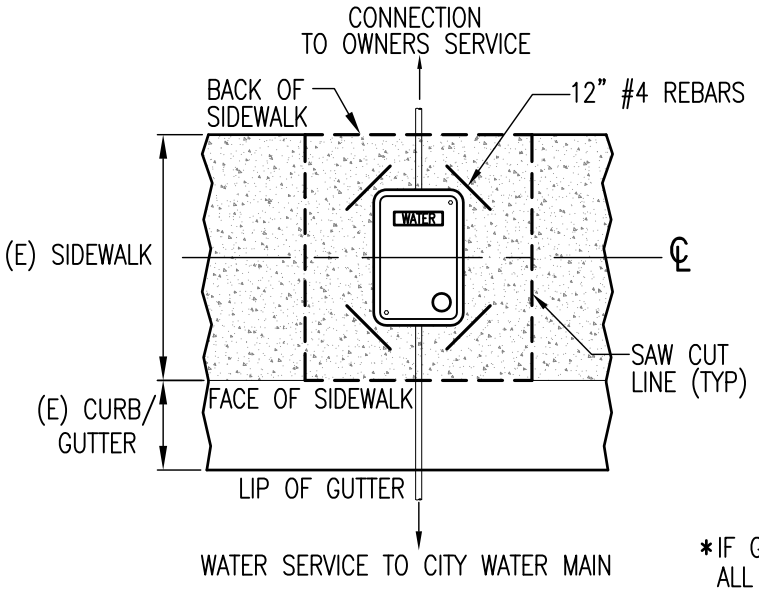

SIDEWALK INSTALLATION

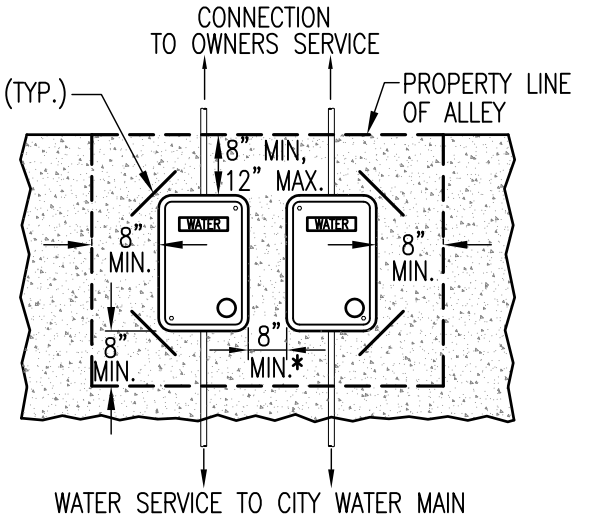

*IF GREATER THAN 14", ADD REBAR @ ALL BOX CORNERS
ALL METER BOXES IN ALLEYS SHALL BE H20 RATED PER CITY STANDARDS

ALLEY INSTALLATION

PLAN VIEW

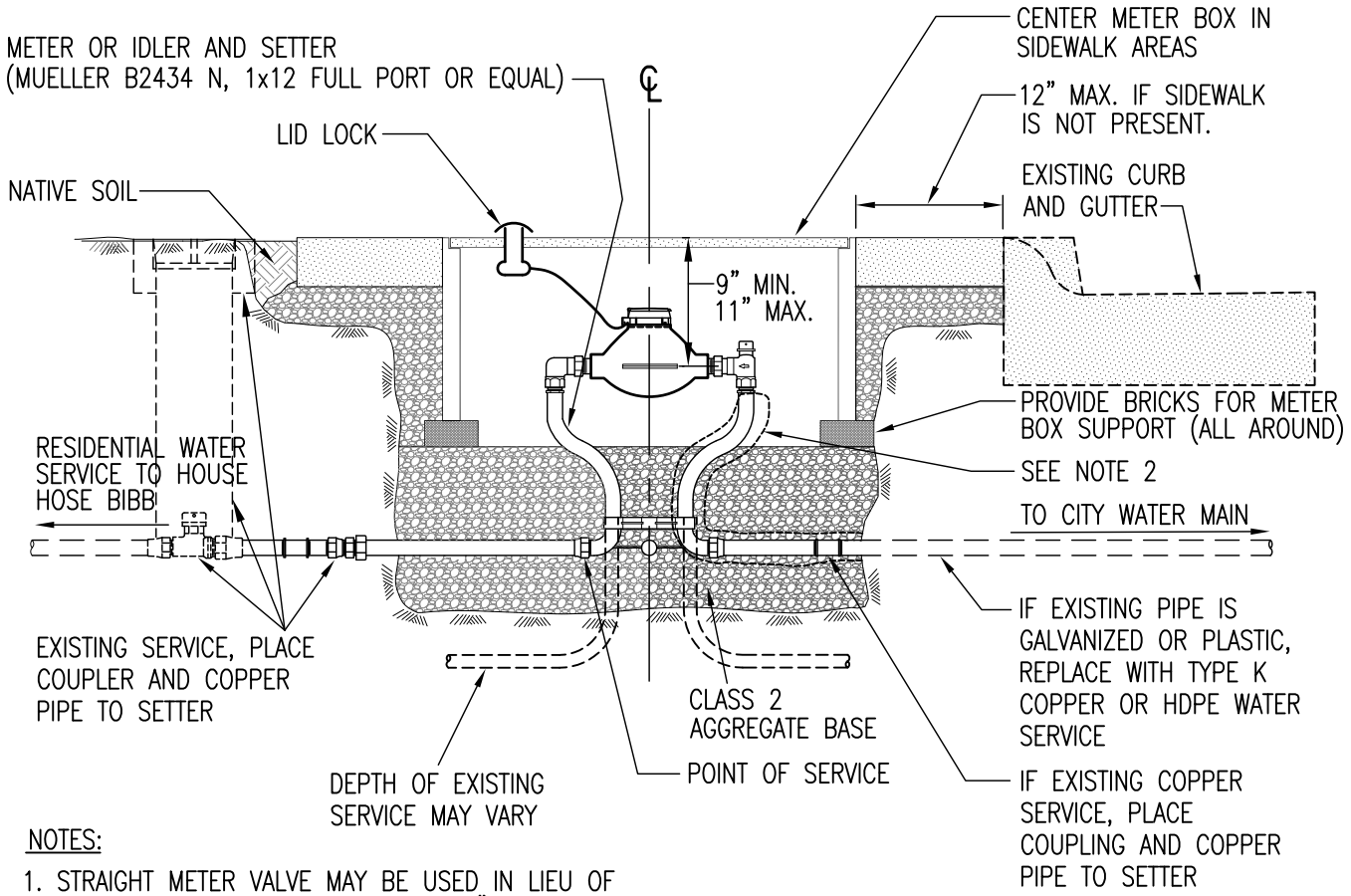

NOTES:

1. STRAIGHT METER VALVE MAY BE USED IN LIEU OF METER SETTER ON SERVICES WITH 20" OR LESS OF COVER.
2. 6 MIL POLYETHYLENE WRAP WITH 10 MIL TAPE SHALL BE REQUIRED ON COPPER TUBBING.
3. IF THERE IS LESS THAN 3 FEET FROM THE (E) CS TO THE BOW, THEN THE (E) WATER SERVICE BETWEEN THEM SHALL BE REPLACED PER CITY STANDARD.

REV.	DATE	DESCRIPTION
△		
△		
△		

R:\Utilstds_New_Std_Details\Meter_Retrofit_Details\W402R

CITY OF SACRAMENTO **DEPARTMENT OF UTILITIES**	RETROFIT OF 1-INCH WATER SERVICE	APPR'D BY: _____ NO SCALE DATE: DWG. NO. **W-402R**

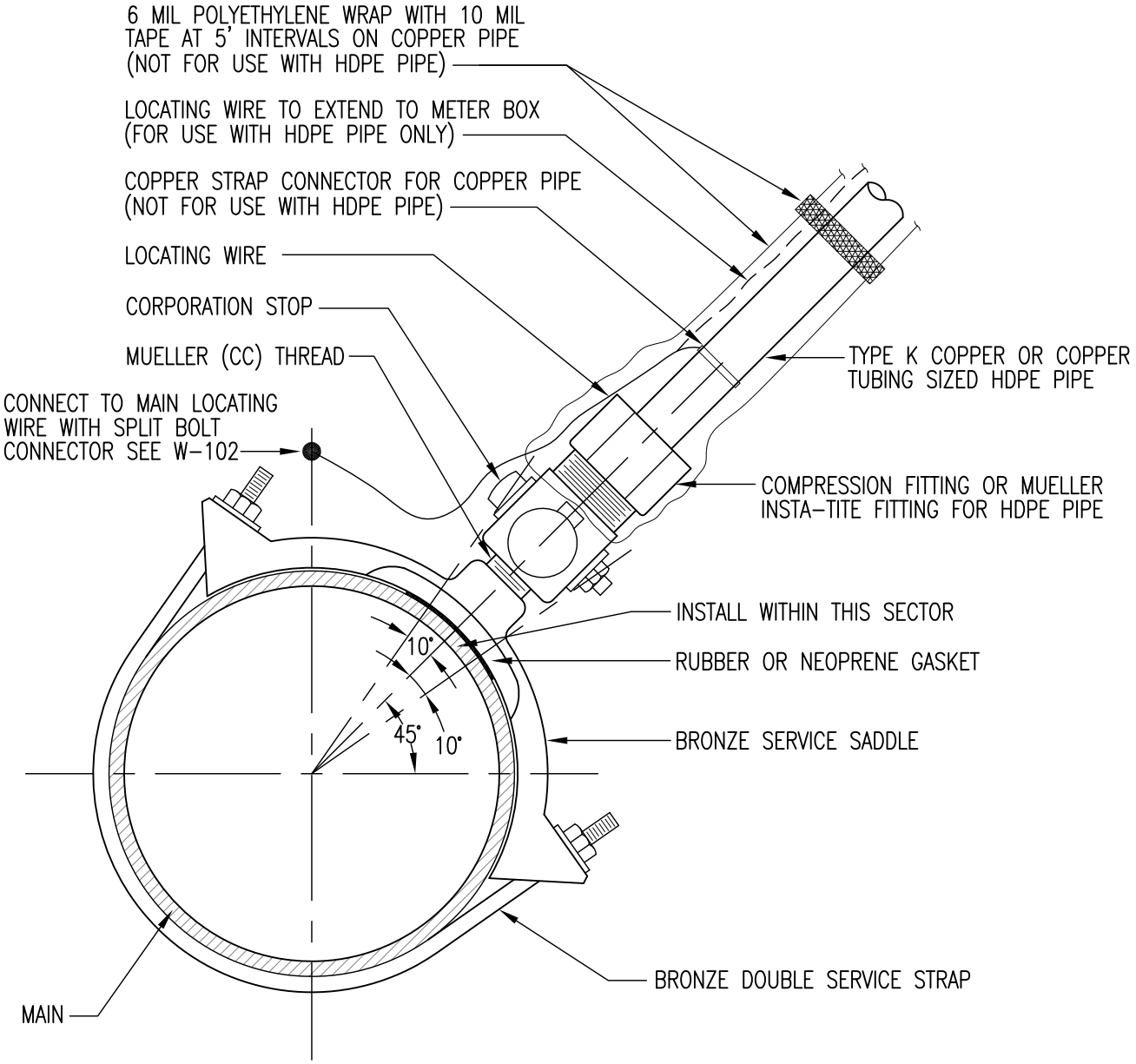

NOTES:

1. ALL CORPORATION STOPS TO HAVE A.W.W.A. STANDARD CORPORATION STOP THREAD (MUELLER CC) ON INLET END. OUTLET END CONNECTIONS SHALL BE FLARED OR COMPRESSION FITTINGS.
2. A BRONZE DOUBLE STRAP SERVICE SADDLE IS REQUIRED ON ALL WATER SERVICE TAPS 1" THRU 2" EXCEPT C-900.
   1 FOR C-900 SHALL BE CAMBRIDGE SERIES 811 OR EQUAL.

REV.	DATE	DESCRIPTION
1	02/19/13	C900 SADDLE

CITY OF SACRAMENTO
DEPARTMENT OF UTILITIES

STD WATER SERVICE
TAPS 1-INCH THRU 2-INCH

APPR'D BY: _____ NO SCALE
DATE: MAY 2007 DWG. NO. **W-403**

R:\Utilstds_New_Std_Details\Water_Utilities\W-403

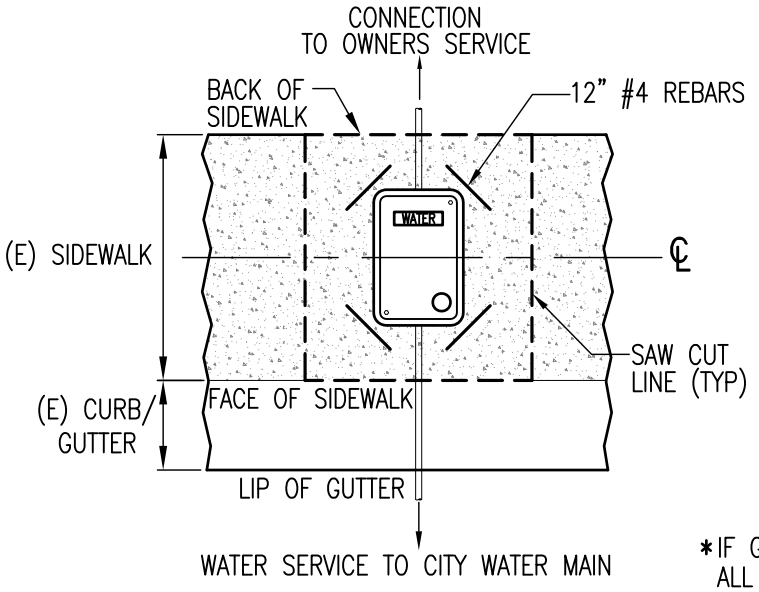

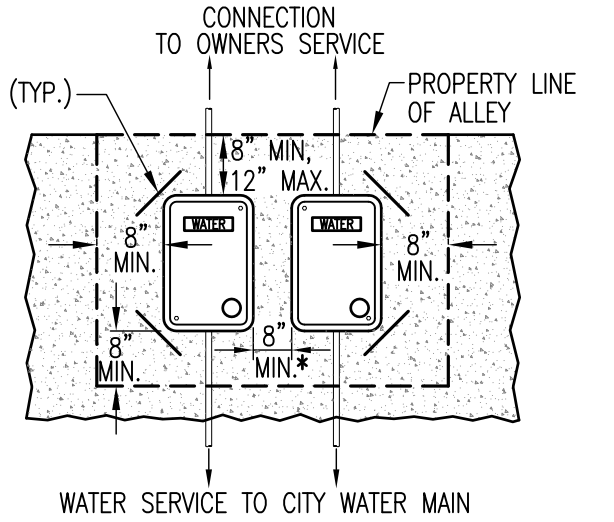

*IF GREATER THAN 14", ADD REBAR @ ALL BOX CORNERS
ALL METER BOXES IN ALLEYS SHALL BE H20 RATED PER
CITY STANDARDS

SIDEWALK INSTALLATION

ALLEY INSTALLATION

PLAN VIEW

STRAIGHT METER VALVE	ANGLE METER VALVE
1-1/2" & 2" MUELLER METER VALVE B-24335 OR EQUAL	1-1/2" & 2" MUELLER ANGLE METER VALVE B-24276 OR EQUAL

*PACK JOINTS ARE NOT ALLOWED.

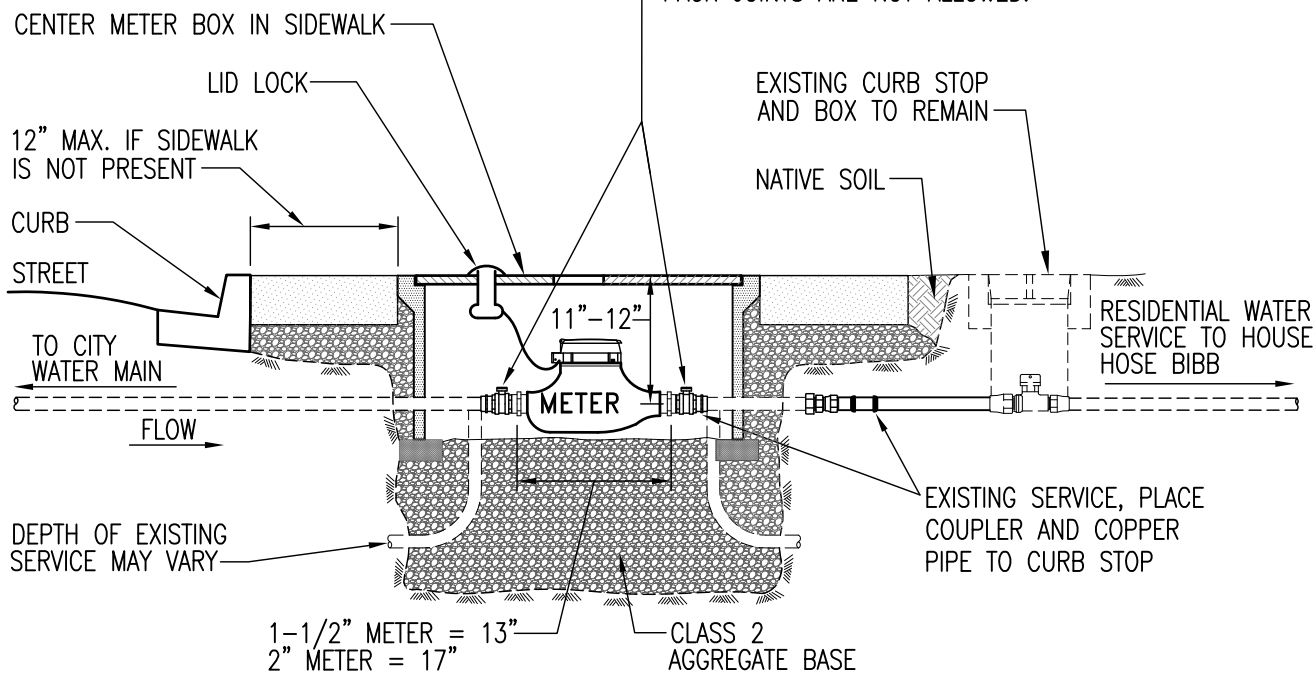

NOTES:

1. FOR REDUCED PRESSURE PRINCIPLE BACKFLOW PREVENTION ASSEMBLY NOTES, SEE DRAWING W-505.
2. IF EXISTING SERVICE IS PLASTIC OR GALVANIZED, REPLACE SERVICE WITH TYPE K COPPER OR HDPE SERVICE MATERIAL TO EXISTING CURB STOP.

REV.	DATE	DESCRIPTION
△		
△		
△		

R:\Utilstds_New_Std_Details\Meter_Retrofit_Details\W507R

CITY OF SACRAMENTO
DEPARTMENT OF UTILITIES

RETROFIT OF 1 1/2 & 2-INCH WATER SERVICE WITHIN EXISTING SIDEWALK

APPR'D BY: _____ NO SCALE
DATE: DWG. NO. **W-507R**

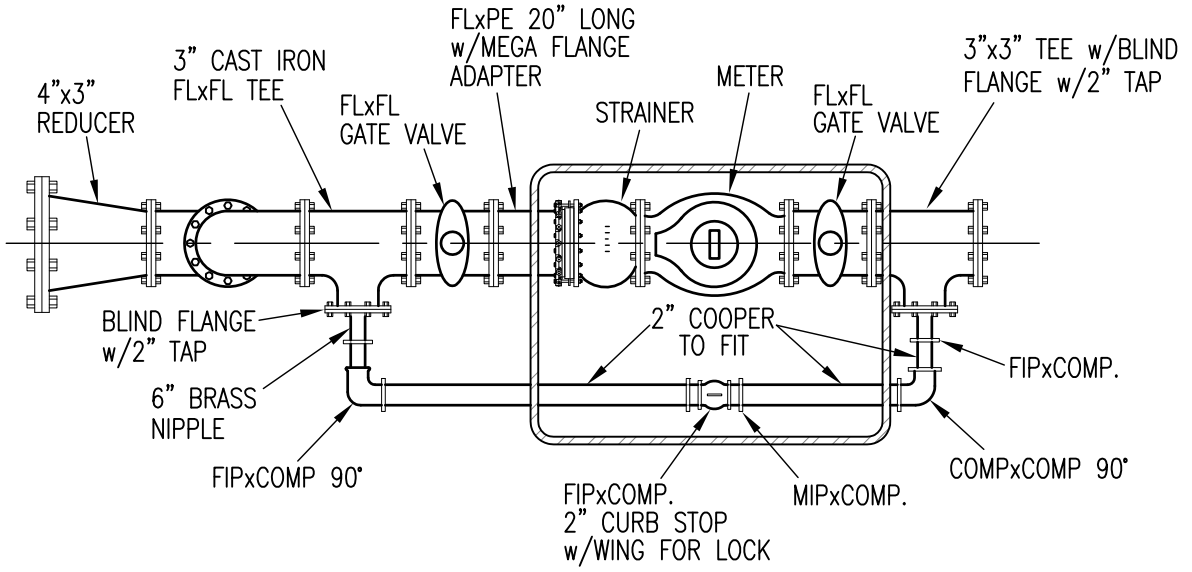

PLAN VIEW

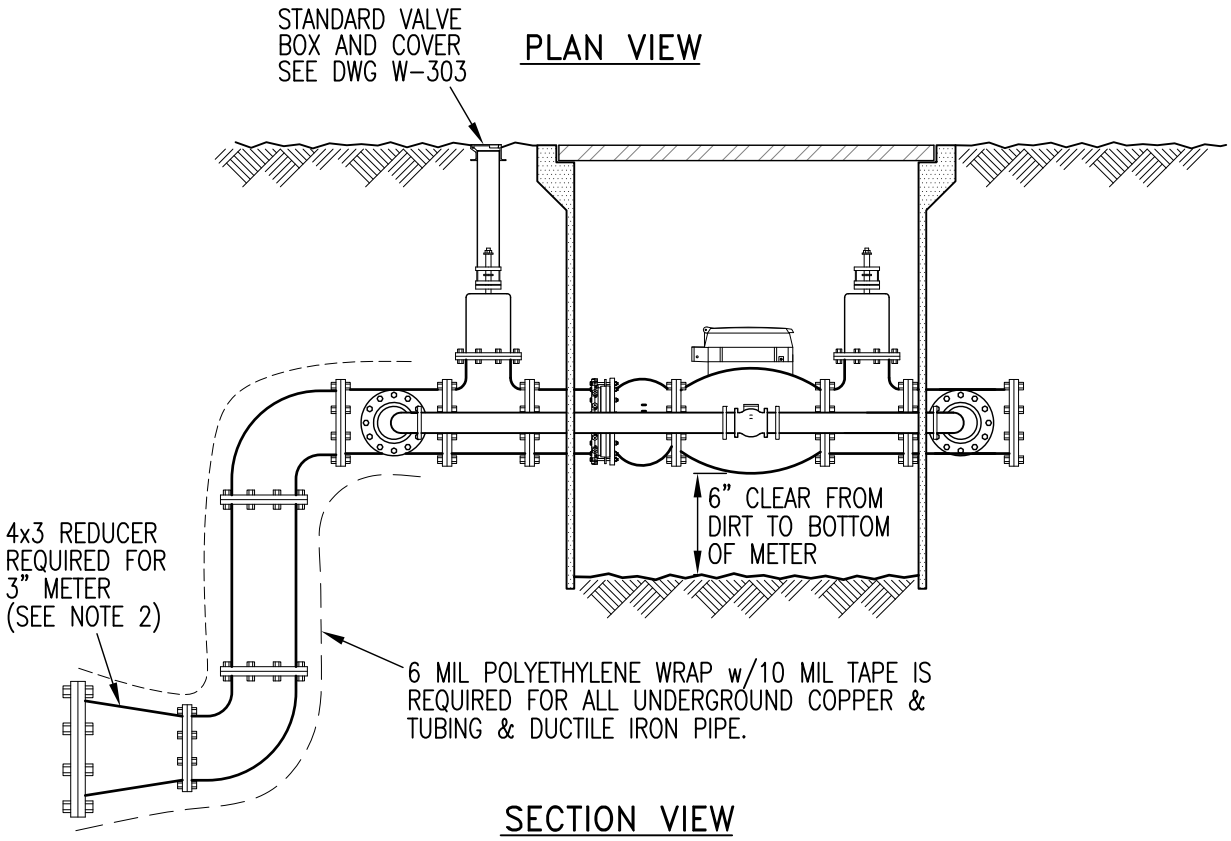

SECTION VIEW

TYPE AND SIZE BOXES:

3" AND 4" IN TRAFFIC = 3048 BOX W/ H20 RATED COVER
3" AND 4" IN PLANTER AREA= B48 BOX WITH 2 PIECE CONCRETE COVERS.
6" IN PLANTER AREA = B52 BOX WITH 3 PIECE CONCRETE COVERS
6" IN TRAFFIC AREA = R10 PIT W/ H20 TRAFFIC RATED STEEL SPRING LOADED COVER
8" IN PLANTER AREA = R17 PIT W/ 4 PIECE STEEL COVER
8" IN TRAFFIC AREA + R17 PIT W/ H20 RATED STEEL SPRING LOADED COVER

NOTES:

1. ALL BOX LIDS MUST HAVE 2-2" RECESSED HOLES TO ACCOMMODATE LID LOCKS.
2. 3" ON-SITE WATER SERVICE REQUIRES A 4" TAP, 4"x3" REDUCER, 3" METER AND 3" BACKFLOW ASSEMBLY. 4" AND LARGER METERS REQUIRES TAP SIZE EQUIVALENT TO METER SIZE.

REV.	DATE	DESCRIPTION
1	11-16-11	NEW DETAIL

CITY OF SACRAMENTO
DEPARTMENT OF UTILITIES

3" - 8" WATER SERVICE BELOW GROUND WITH BYPASS (COMPOUND METERS)

APPR'D BY: Melissa O. Brooks NO SCALE
DATE: NOV 2011 DWG. NO. W-515

R:\Utilstds_New_Std_Details\Water_Utilities\W-515

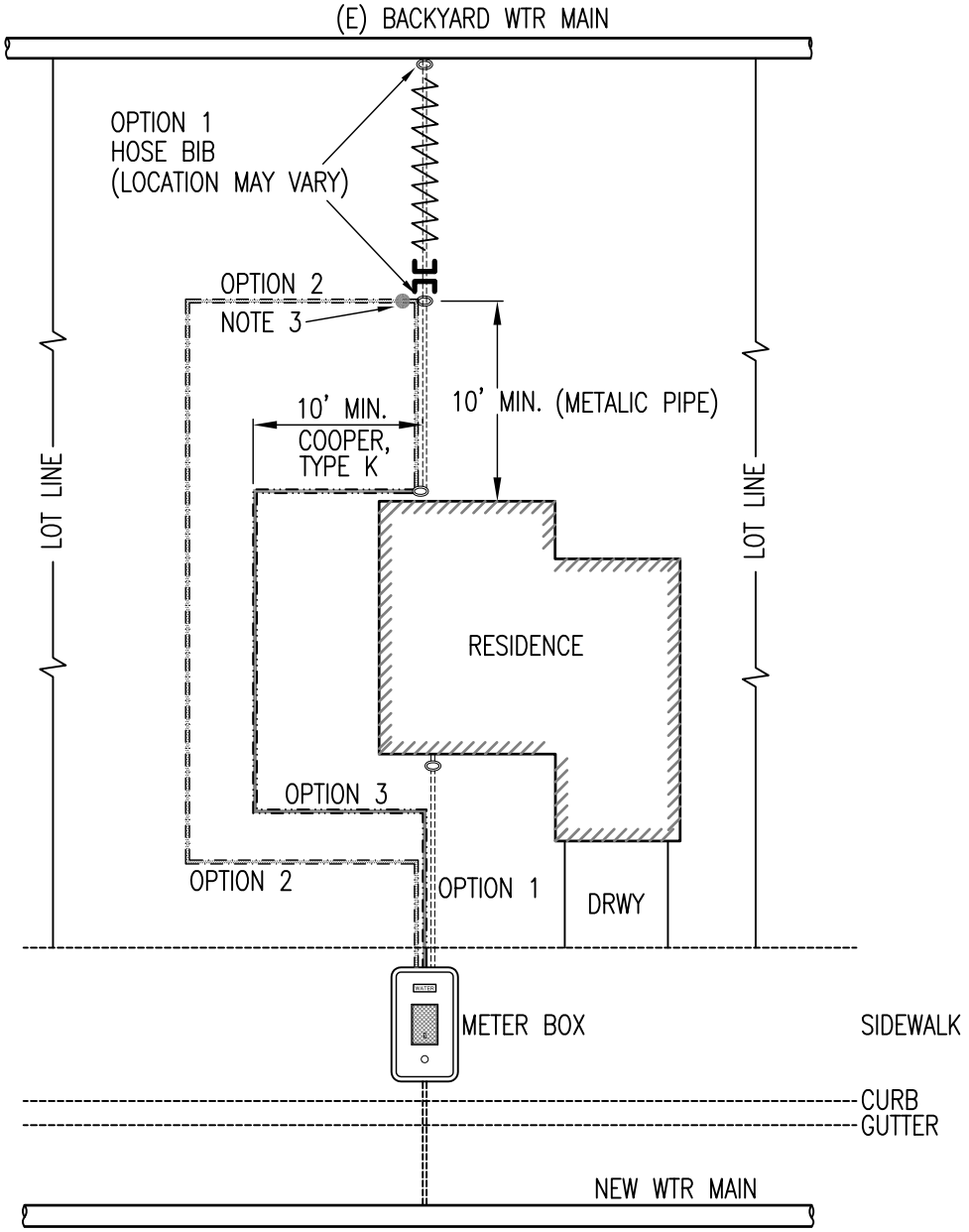

OPTION 1:
1. CONNECT TO FRONT HOSE BIBB.
2. CAP & ABANDON (E) SERVICE A MINIMUM OF 10' FROM HOUSE GROUND AT HOSE BIBB.
3. PLACE NEW HOSE BIBB A MIN. OF 10' FROM FROM HOUSE AT OWNERS CHOICE OF LOCATION.

OPTION 2:
1. RUN NEW WTR SERVICE TO BACKYARD.
2. CONNECT TO EXISTING SERVICE A MIN. OF 10' FROM HOUSE GROUND AT HOSE BIBB.
3. INSTALL 1 1/2" WHEEL VALVE w/6" SDR 35 STAND PIPE, & CARSON L910 BOX OR EQUAL AT THE CONNECTION POINT.

OPTION 3:
1. RUN NEW WTR SERVICE TO BACKYARD.
2. CONNECT TO HOUSE AT HOSE BIBB.
3. PLACE A MIN. OF 10' OF 1 1/2" COPPER FROM HOSE BIBB.

TITLE

NOTE:
REFER TO DWG. W-406 FOR CONNECTION AT HOSE BIBB.

REV.	DATE	DESCRIPTION
△		
△		
△		

CITY OF SACRAMENTO DEPARTMENT OF UTILITIES	THREE OPTIONS	APPR'D BY: _____ NO SCALE DATE: MAY 2013 DWG. NO. W-XXX

R:\Utilstds_New_Std_Details\Water_Utilities\W-XXX

OPTION 1

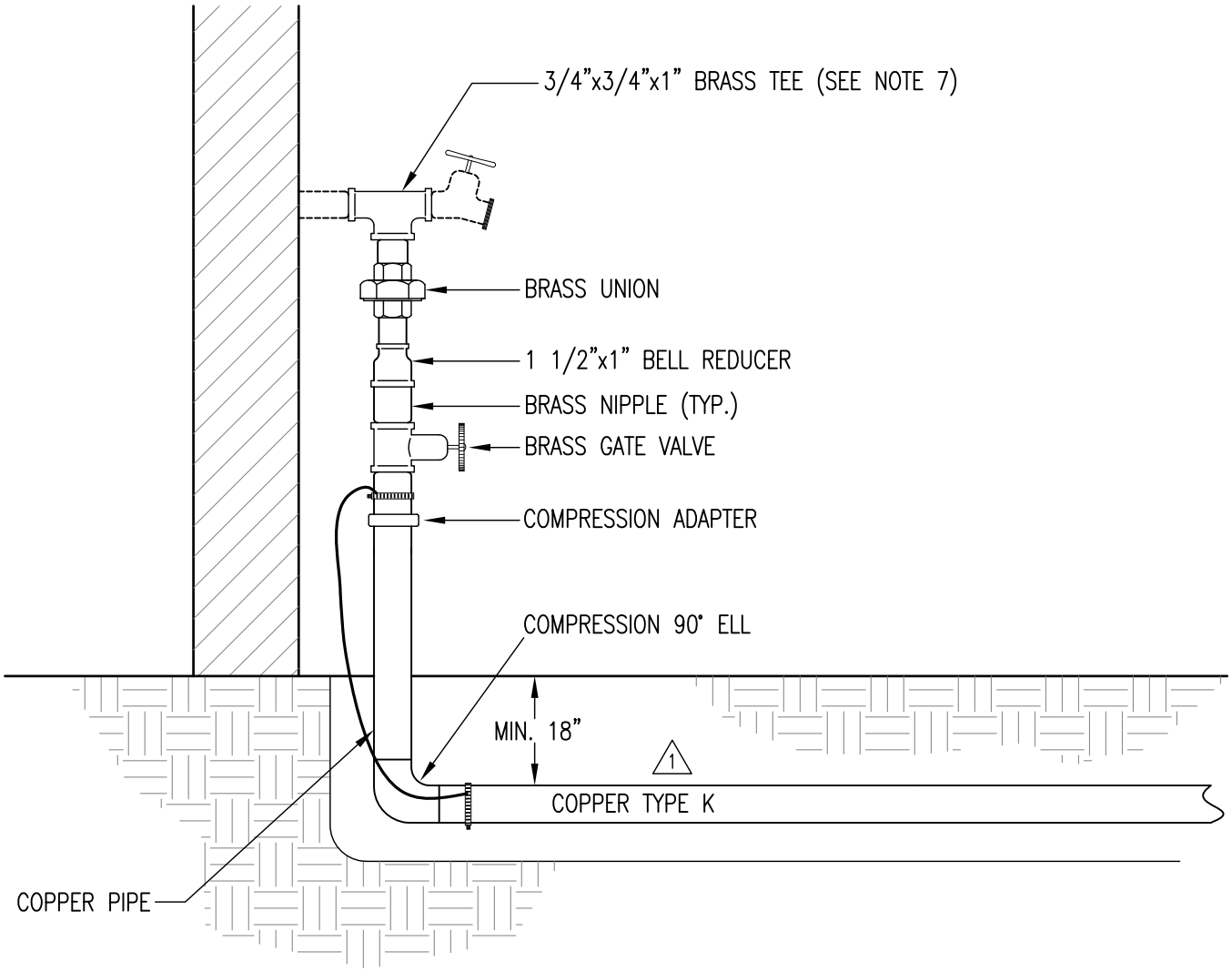

GENERAL NOTES

1. WATER SERVICE PIPE SHALL BE $1\frac{1}{2}$-INCH IN DIAMETER UP TO ABOVE GROUND TEE.
2. WHENEVER COPPER WATER SERVICE PIPE IS IN DIRECT CONTACT WITH CONCRETE, THE CONTRACTOR SHALL WRAP COPPER PIPE IN 35 MIL POLYKIN OR EQUAL, OR PLACE IN CASING.
3. WATER SERVICE PIPE MAY BE PLACED IN AN EXCAVATED TRENCH AND BACKFILLED, OR DIRECTIONALLY DRILLED.
4. PIPE ALIGNMENT SHALL NOT PASS UNDER ANY STRUCTURE.
5. WATER SERVICES AND THEIR INSTALLATION SHALL MEET APPLICABLE REQUIREMENTS OF SECTION 10 THRU 38 OF THESE SPECIFICATIONS.
6. TO TRANSITION FROM GALVANIZED PIPE TO COPPER PIPE, PLACE A BRASS UNION W/BRASS GATE VALVE BETWEEN GALVANIZED PIPE AND COPPER PIPE.
7. TEE TO MATCH SIZE OF EXISTING HOUSE PLUMBING IF LARGER THAN 3/4"

REV.	DATE	DESCRIPTION
1	03-22-12	Type K Only

CITY OF SACRAMENTO DEPARTMENT OF UTILITIES	WATER SERVICE CONNECTION AT HOSE BIBB	APPR'D BY: D. Bent NO SCALE DATE: MAY 2007 DWG. NO. W-YYY

R:\Utilstds_New_Std_Details\Water_Utilities\W-406

OPTION 3

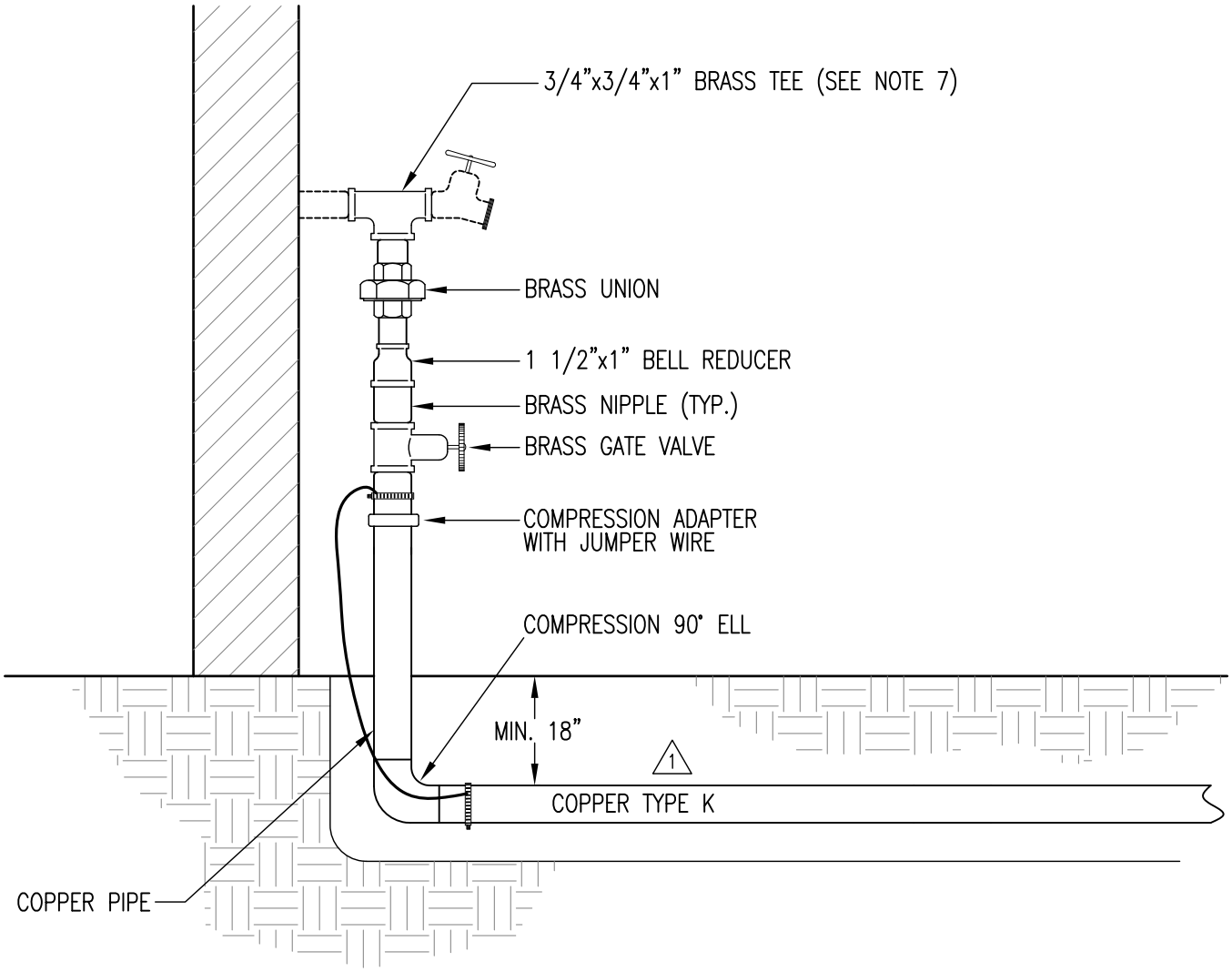

GENERAL NOTES

1. WATER SERVICE PIPE SHALL BE $1\frac{1}{2}$-INCH IN DIAMETER UP TO ABOVE GROUND TEE.
2. WHENEVER COPPER WATER SERVICE PIPE IS IN DIRECT CONTACT WITH CONCRETE, THE CONTRACTOR SHALL WRAP COPPER PIPE IN 35 MIL POLYKIN OR EQUAL, OR PLACE IN CASING.
3. WATER SERVICE PIPE MAY BE PLACED IN AN EXCAVATED TRENCH AND BACKFILLED, OR DIRECTIONALLY DRILLED.
4. PIPE ALIGNMENT SHALL NOT PASS UNDER ANY STRUCTURE.
5. WATER SERVICES AND THEIR INSTALLATION SHALL MEET APPLICABLE REQUIREMENTS OF SECTION 10 THRU 38 OF THESE SPECIFICATIONS.
6. TO TRANSITION FROM GALVANIZED PIPE TO COPPER PIPE, PLACE A BRASS UNION W/BRASS GATE VALVE BETWEEN GALVANIZED PIPE AND COPPER PIPE.
7. TEE TO MATCH SIZE OF EXISTING HOUSE PLUMBING IF LARGER THAN 3/4"

REV.	DATE	DESCRIPTION
1	03-22-12	Type K Only

CITY OF SACRAMENTO DEPARTMENT OF UTILITIES	WATER SERVICE CONNECTION AT HOSE BIBB	APPR'D BY: NO SCALE DATE: MAY 2007 DWG. NO. W-YYY

R:\Utilstds_New_Std_Details\Water_Utilities\W-406

Measurement Examples

Fire Hydrant - include address where hydrant is located and distance and direction from water main.

FH Located in front of 1500 10th Ave.
Brand name (type) of FH
Model number
10' north of main

Fire Hydrant Gate Valve - include distance and direction from fire hydrant.
FH GV 9' south of Fire Hydrant

Meter Box - include address and location.
MB 1400 Wentworth Ave: 45" NSPL, 5' EEC

APPENDIX C

Notification Letters

Monthly Source Billing - Sample

Water Meter Installation [Distribute appropriate # of working days prior to beginning work]

(CONTRACTOR LETTER HEAD)

Dear Resident,

The City of Sacramento, Department of Utilities, awarded a construction contract to (Contractor) to install water meters at various commercial and residential properties in your neighborhood. A new meter and box will be placed (or retrofitted) at the point of service to each property.

General public and construction crew safety is of primary concern to us and we encourage you to observe the construction signs. We realize this construction project may be a temporary inconvenience and we will strive to minimize the impacts to the residents.

If you have any questions or problems, please contact any one of the project representatives listed below:

Contractor Superintendent: Name: Phone Number
City Inspector: Name: Phone Number
City Project Manager: Name: Phone Number

Work is scheduled to begin in your property on _____.

Thank you for your cooperation on this very important project.

Constructing Water Main [Distribute 7 working days prior to beginning work]

(CONTRACTOR LETTER HEAD)

Dear Resident,

The City of Sacramento, Department of Utilities, awarded a construction contract to (Contractor) to replace the water distribution main and water services in your neighborhood. A new water main will be constructed in the street and water services will be constructed from the new main to each home. Also, new fire hydrants will be constructed to improve fire protection in your neighborhood.

During the course of construction, on street parking may be temporarily removed to accommodate traffic and construction work. Access to your driveway may be temporarily restricted when construction takes place in front of your house. At the end of each work day, we will backfill the trench, place temporary paving or place steel plates over trench, and open all lanes of traffic to the public. Our work hours are typically between 7 AM to 6 PM.

General public and construction crew safety is of primary concern to us and we encourage you to observe the construction signs. We realize this construction project may be a temporary inconvenience and we will strive to minimize the impacts to the residents.

If you have any questions or problems, please contact any one of the project representatives listed below:

Contractor Superintendent: Name: Phone Number
City Inspector: Name: Phone Number
City Project Manager: Name: Phone Number

Pipeline work is scheduled to begin in your neighborhood on _____.

Once the pipeline is constructed, we will return to your street to install the water service to each home, disinfect and pressure test the pipelines and restore paving and landscaping. The anticipated project completion date is _____.

Thank you for your cooperation on this very important project.

NO.	DATE PAID	APN	METER NO.	STREET NO.	STREET NAME	METER LOCATION	METER MANUFACTURER	METER SIZE	(E) SERVICE SIZE	(E) SERVICE MATERIAL	ADD	DEL	BID ITEMS	TOTAL SF CONCRETE	EXTRA CONCRETE	ADDITIONAL COMMENTS

EXAMPLE