Meeting Date: **12/9/2014**

Report Type: Consent

Report ID: 2014-00871

City of SACRAMENTO **13**

City Council Report
915 I Street, 1st Floor
www.CityofSacramento.org

Title: Contract: Groundwater Well Rehabilitation, Phase 3 (Reviewed 12/02/2014)

Location: Citywide

Recommendation: Pass a Resolution 1) approving the contract plans and specifications for the Groundwater Well Rehabilitation, Phase 3 project and awarding the contract to Clyde G. Steagall, Inc. in an amount not-to-exceed $4,006,446; and 2) authorizing the City Manager or his designee to transfer $4,785,000 from the Treatment Plant Rehab Project (Z14006000, Fund 6310 – Water Revenue Bond Fund), $115,000 from the Groundwater Well Fluoride Systems Project (Z14130600, Fund 6310), and $125,564 from the Groundwater Well Fluoride Systems Project (Z14130600, Fund 6205 – Water Grant Fund), to the Groundwater Well Rehabilitation Program (Z14110100).

Contact: Dan Sherry, Interim Manager, Engineering & Water Resources, (916) 808-1422; Megan Thomas, Associate Civil Engineer, (916) 808-1729, Department of Utilities

Presenter: None

Department: Department Of Utilities
Division: Engineering & Water Resources
Dept ID: 14001311
Attachments:
1-Description/Analysis
2-Background
3-Resolution
4-Z14110105 Specs - Final
5-Z14110105 Plans - Final

City Attorney Review

Approved as to Form
Kourtney Burdick
11/21/2014 10:49:13 AM

Approvals/Acknowledgements

Department Director or Designee: Bill Busath - 11/17/2014 2:15:39 PM

James Sanchez, City Attorney Shirley Concolino, City Clerk Russell Fehr, City Treasurer
John F. Shirey, City Manager

Back to Report Table of Contents

Description/Analysis

Issue Detail: The Utilities Department performed a condition assessment on its highest priority groundwater wells that were showing signs of poor performance due to mechanical and electrical failure or water quality concerns. Staff prepared plans and specifications to rehabilitate eight of these wells and the project was formally advertised to solicit public bids. Staff is recommending award of the contract to Clyde G. Steagall, Inc. as the lowest responsive and responsible bidder.

Policy Considerations: The requested action is in conformance with City Code Chapter 3.60, Articles I and III, which provide for the award of competitively bid contracts to the lowest responsible and responsive bidder. Staff has verified or will verify prior to the Notice to Proceed, that the bonds and insurance required for this project are valid.

Economic Impacts: This project is expected to create 16.03 total jobs (9.21 direct jobs and 6.81 jobs through indirect and induced actives) and create $2,473,720 in total economic output ($1,559,205 of direct output and another $914,515 of output through indirect and induced activities).

The indicated economic impacts are estimates calculated using a calculation tool developed by the Center for Strategic Economic Research (CSER). CSER utilized the IMPLAN input-output model (2009 coefficients) to quantify the economic impacts of a hypothetical $1 million of spending in various construction categories within the City of Sacramento in an average one-year period. Actual impacts could differ significantly from the estimates and neither the City of Sacramento nor CSER shall be held responsible for consequences resulting from such differences.

Environmental Considerations: The Community Development Department, Environmental Planning Services Manager has reviewed the project and has determined that the project is exempt from the California Environmental Quality Act (CEQA) under CEQA Guidelines sections 15301 (b & d) and 15302. The project consists of operation and maintenance of existing utilities (City drinking water wells) involving negligible or no expansion of use beyond that at the time of the City's determination; and the rehabilitation of deteriorated facilities or mechanical equipment to meet current standards of public health and safety. The project also consists of the replacement of existing structures and facilities (fencing, fluoride systems, and electrical systems) on the same site with the same purpose as the facilities being replaced.

Sustainability: The City is committed to maintaining an efficient and dependable groundwater supply that supports the City's water supply reliability and surface water / groundwater conjunctive use program. This report's recommendation is consistent with the City's Strategic Plan Goals of achieving sustainability, livability, and expanding economic development throughout the City.

Commission/Committee Action: None

Rationale for Recommendation: The project was formally advertised on (date) to solicit public bids. The City Clerk's Office received and opened the following five bids on October 29, 2014:

1) Clyde G. Steagall, Inc.	Bid Amount: $4,006,446.00
2) Koch & Koch, Inc.	Bid Amount: $4,012,804.00
3) TTS Construction Corporation	Bid Amount: $4,177,086.86
4) J.R. Sharp Construction, Inc.	Bid Amount: $4,481,762.00
5) R.E. Smith Contractor, Inc.	Bid Amount: $4,498,000.00

The engineer's estimate was $3,449,250. The lowest bidder is approximately 16% higher than the engineer's estimate. The engineer's estimate was based on the bids from the Well Rehabilitation Phase 2 Project that was awarded one month ago. Drought conditions have significantly increased the demand for groundwater well rehabilitation projects throughout the Central Valley, limiting the number of contractors bidding on projects and driving up costs. The reduced availability of specialized equipment needed to complete the work accounts for the variance in the engineer's estimate and the lowest bid. This project is critical to the City's strategy of increasing groundwater capacity to offset possible reductions in surface water due to the ongoing drought and therefore, staff recommends moving forward with awarding the contract.

Financial Considerations: The total estimated project cost including design, project management, inspection, and contingency is estimated to be $5,324,590. The Groundwater Well Rehabilitation Project Phase 3 (Z14110105) budget is currently $300,000, which was sufficient to complete design of the project. To complete the project, the following transfers are recommended: $4,785,000 from the Treatment Plant Rehab Project (Z14006000, Fund 6310 – unobligated Water Revenue Bond funds), $115,000 from the Groundwater Well Fluoride Systems project (Z14130600, Fund 6310), and $125,564 from the Groundwater Well Fluoride Systems project (Z14130600, Fund 6205 – Water Grant Fund).

Local Business Enterprise (LBE): This project included a minimum LBE participation requirement of 5%. The bid submitted by Clyde G. Steagall, Inc. exceeded this requirement, with an LBE participation level of 8.7%.

Back to Report Table of Contents

Background

The City currently operates 27 wells in the City, a majority of which have been in service for over 40 years. In order to pursue a conjunctive use strategy for water production, which reduces reliance on surface water during periods of low water supply, the Department of Utilities evaluated the City's well system to identify future needs for system reliability and efficient groundwater production.

Ten wells were chosen for assessment due to evidence of poor performance and for their importance in providing adequate supply to the water distribution system. Results from the assessment have provided information to determine if each well can be rehabilitated, and the scope of the rehabilitation for each eligible well.

Staff prepared plans and specifications for the rehabilitation of eight wells (94, 107, 120, 122, 126, 129, 133, and 138) and the project was solicited for public bids. Five bids were received and opened by the City Clerk on October 29, 2014.

Back to Report Table of Contents

RESOLUTION NO. 2014-

Adopted by the Sacramento City Council

December 9, 2014

AWARD CONTRACT FOR GROUNDWATER WELL REHABILITATION PROJECT PHASE 3 (Z14110105) AND AUTHORIZE BUDGET TRANSFERS

BACKGROUND

A. The City currently operates 27 wells in the City, a majority of which have been in service for over 40 years. In order to pursue a conjunctive use strategy for water production, to reduce reliance on surface water during periods of low water supply, the Department of Utilities evaluated the City's well system to identify future needs for system reliability and efficient groundwater production.

B. Staff prepared plans and specifications for the rehabilitation of eight wells (94, 107, 120, 122, 126, 129, 133, and 138) and the project was solicited for public bids. Five bids were received and opened by the City Clerk on October 29, 2014.

C. Clyde G. Steagall, Inc. was the lowest responsive and responsible bidder, with a bid amount of $4,006,446.

D. To provide sufficient funds for the Project, budgetary transfers from the Treatment Plant Rehab Project in the amount of $4,785,000 and the Groundwater Well Fluoride Systems Project in the amount of $240,564 are recommended.

BASED ON THE FACTS SET FORTH IN THE BACKGROUND, THE CITY COUNCIL RESOLVES AS FOLLOWS:

Section 1. The plans and specifications for the Groundwater Well Rehabilitation Project Phase 3 contract (Z14110105) are approved, and the contract is awarded to Clyde G. Steagall, Inc. for an amount not-to-exceed $4,006,446.

Section 2. The City Manager or his designee is authorized to transfer $4,785,000 from the Treatment Plant Rehab Project (Z14006000, Fund 6310 – Water Revenue Bond Fund), $115,000 from the Groundwater Well Fluoride Systems Project (Z14130600, Fund 6310), and $125,564 from the Groundwater Well Fluoride Systems Project (Z14130600, Fund 6205 – Water Grant Fund), to the Groundwater Well Rehabilitation Program (Z14110100).

Back to Report Table of Contents

City of SACRAMENTO
Department of Utilities

ENGINEERING SERVICES DIVISON

CONTRACT SPECIFICATIONS
FOR

GROUNDWATER WELL REHABILITATION PH 3

PN: Z14110105

B15141321010

Engineer's Estimate: $3,450,000

Mandatory Pre-Bid Site Visit: Tuesday, October 14, 2014 @ 9:00 AM
Pre-Bid Site Location: Well 129, Rio Linda Blvd. at Harris Ave.
(adjacent to empty lot at 3904 Rio Linda Blvd), Sacramento, CA 95838)

For Pre-Bid Information Call:	Separate Plans
Megan Thomas Associate Engineer (916) 808-1729	Bid to be received before 2:00 PM **October 29, 2014** City Hall, Office of the City Clerk 915 I Street, 5th Floor, Public Counter Sacramento, CA 95814

LBE PROGRAM PARTICIPATION

For information on meeting the City of Sacramento's Local Business Enterprise (LBE) project goals, please contact Veronica A. Smith at (916) 808-1046, or visit the City of Sacramento's small business web site at: http://www.cityofsacramento.org/econdev/business-open/small-business-certification.cfm

GROUNDWATER WELL REHABILITATION PH 3
TABLE OF CONTENTS

INVITATION TO BID ..... Page 1 of 2

LBE INFORMATION ..... Page 1 of 1

NOTICE TO CONTRACTORS ..... Page 1 of 1

CONTRACTOR REGISTRATION LAW SB 854 FACT SHEET ..... Page 1 of 5

PROPOSAL FORMS (To be submitted by all Bidders as the Bid Page)

Sealed Proposal ..... Page 1 of 3

Bid Proposal Guarantee ..... Page 1 of 1

Subcontractor and LBE Participation Verification ..... Page 1 of 1

Drug-Free Workplace Policy and Affidavit ..... Page 1 of 1

Minimum Qualifications Questionnaire ..... Page 1 of 6

Requirements of the Non-Discrimination in Employee Benefits Code ..... Page 1 of 8

Construction and Demolition (C&D) Debris Recycling Requirements ..... Page 1 of 2

C & D Waste Management Plan ..... Page 1 of 2

C&D Debris Haulers & Facilities ..... Page 1 of 1

C&D Debris Waste Log ..... Page 1 of 1

LBE Requirements (City Contracts no Federal Funds Used) ..... Page 1 of 4

CONTRACT FORMS (Only for successful Bidder)

Worker's Compensation Insurance Certification ..... Page 1 of 1

Agreement ..... Page 1 of 14

Bonds ..... Page 1 of 6

- Performance Bond
- Payment Bond
-

CALIFORNIA LABOR CODE RELATING TO APPRENTICES ..... Page 1 of 1

TAX FORMS (REQUIRED UPON AWARD)

W-9 ..... Page 1 of 1

CA Form 590 ..... Page 1 of 1

SPECIAL PROVISIONS

LBE INFORMATION

The City of Sacramento's Local Business Development (LBE) program establishes an annual local business enterprise (LBE) participation goal for City contracts, and authorizes City departments to require minimum LBE participation levels in individual contracts. Under City Code section 3.60.270, all bidding contractors must meet or exceed participation goals established for this project in order to qualify as a responsible bidder.

For information on meeting the City of Sacramento's Local Business Enterprise (LBE) project goals, please contact Veronica A. Smith at (916) 808-1046, or visit the City of Sacramento's small business web site at: http://www.cityofsacramento.org/econdev/business-open/small-business-certification.cfm

NOTICE TO CONTRACTORS

CITY OF SACRAMENTO

Sealed Proposals will be received by the City Clerk of the City of Sacramento at the Office of the City Clerk, City Hall, located at 915 I Street, 5th Floor, Public Counter, up to the hour of 2:00 p.m. on **October 29, 2014** and opened at and read after 2:00 p.m. on **October 29, 2014**, or as soon thereafter as business allows, in the Hearing Room, 2nd Floor Room, in Historic City Hall, for construction of:

GROUNDWATER WELL REHABILITATION PH 3
(PN: Z14110105) (B15141321010)

as set forth in the Construction Documents.

Proposals received and work performed thereunder shall comply with the requirement of Chapter 3 of the Sacramento City Code. Each Bid Proposal shall be accompanied by bid security of at least 10% of the sum the Bid Proposal. The right to reject proposals or to waive any error or omission in any Bid Proposal received is reserved by the City. Signed proposals shall be submitted on the printed forms contained herein and enclosed in an envelope marked:

SEALED PROPOSAL FOR
GROUNDWATER WELL REHABILITATION PH 3
(PN: Z14110105) (B15141321010)

LBE CERTIFICATIONS ARE DUE BY THE CLOSE OF BUSINESS TWO DAYS AFTER BID OPENING to:
Megan Thomas, Department of Utilities, Engineering Services Division
1395 35th Avenue, Sacramento, CA 95822
Phone: (916) 808-1729 / Fax: (916) 808-1497/Email: MThomas@cityofsacramento.org

You can view and download the plans and Contract Documents from:

PLANET BIDS
http://www.planetbids.com/portal/portal.cfm?CompanyID=15300#

Subcontractors shall comply with the rates of wages currently established by the Director of Industrial Relations under provisions of Sections 1773 of the Labor Code of the State of California, a copy of which is on file in the office of the City Clerk. In accordance with Sacramento City Code Section 3.60.180 and Section 1771.5 of the California Labor Code, the payment of the general prevailing rate of per diem wages or the general prevailing rate of per diem wages for holiday and overtime is not required for any Public Construction project of $25,000 or less, or Public Maintenance project of $15,000 or less. The City of Sacramento has an approved Labor Compliance Program. **The City uses an electronic system for the submission of Labor Compliance Reports, which became effective May 1, 2007.** Each contractor and every lower-tier subcontractor submits certified payrolls and labor compliance documentation electronically at the discretion of and in the manner specified by the City of Sacramento.

Electronic submittal is via a web-based system, accessed on the World Wide Web by a web browser. Each contractor and subcontractor is given a Log On identification and password to access the City of Sacramento's reporting system.

Use of the system may entail additional data entry of weekly payroll information including; employee identification, labor classification, total hours worked and hours worked on this project, wage and benefit rates paid, etc. The contractor's payroll and accounting software might be capable of generating a 'comma delimited file' that will interface with the software.

Disseminate these provisions to every lower-tier subcontractor and vendor required to provide labor compliance documentation.

All questions regarding this Labor Compliance Program should be directed to the department's contracts staff or the Labor Compliance Officer at (916) 808-4011.

Pursuant to Sacramento City Code Section 3.60.250, any Agreement awarded pursuant to this Invitation to Bid shall contain a provision permitting the substitution of securities for any monies withheld to ensure performance under the Agreement. The terms of such provisions shall be according to the requirements and the form required by the City.

Bid protests must be filled and maintained in accordance with the provisions of Sections 3.60.460 through 3.60.560 of the Sacramento City Code. Bid protests that do not comply with Sections 3.60.460 through 3.60.560 of the Sacramento City Code shall be invalid and shall not be considered. A bid protest fee of $750.00 is required at the time of filing to be considered valid in accordance with City of Sacramento Resolution No. 2003-231 dated April 29, 2003. As used herein, the term "bid protest" includes any bid protest that (1) claims that one or more bidders on this contract should be disqualified or rejected for any reason, or (2) contests a City staff recommendation to award this contract to a particular bidder, or (3) contests a City staff recommendation to disqualify or reject one or more bidders on this contract. A copy of Sections 3.60.460 through 3.60.560 of the Sacramento City Code may be obtained from the Project Manager, or from the City Clerk, located at 915 I Street, 5th Floor, Sacramento, CA 95814.

NEW PUBLIC WORKS CONTRACTOR REGISTRATION LAW [SB 854]

FACT SHEET

SB 854, a budget trailer bill that was signed into law on June 20, 2014, and became effective immediately, made several significant changes to laws pertaining to the administration and enforcement of prevailing wage requirements by the Department of Industrial Relations (DIR). Among other things, SB 854 established a new public works contractor registration program to replace prior Compliance Monitoring Unit (CMU) and Labor Compliance Program (LCP) requirements for bond-funded and other specified public works projects. The fees collected through this new program will be used to fund all of DIR's public works activities, including compliance monitoring and enforcement, the determination of prevailing wage rates, public works coverage determinations, and hearing enforcement appeals.

Essentials of public works contractor registration program:

- Contractors will be subject to a registration and annual renewal fee that has been set initially at $300. The fee is non-refundable and applies to all contractors and subcontractors who intend to bid or perform work on public works projects (as defined under the Labor Code).
- Contractors will apply and pay the fee online and must meet minimum qualifications to be registered as eligible to bid and work on public works projects:
    - Must have workers' compensation coverage for any employees and only use subcontractors who are registered public works contractors.
    - Must have Contractors State License Board license if applicable to trade.
    - Must have no delinquent unpaid wage or penalty assessments owed to any employee or enforcement agency.
    - Must not be under federal or state debarment.
    - Must not be in prior violation of this registration requirement once it becomes effective. However, for the first violation in a 12 month period, a contractor may still qualify for registration by paying an additional penalty.
- The registration fee is not related to any project. It is more like a license that enables the registrant to bid on and perform public works.

- DIR will post a list of registered contractors and subcontractors on its website so that awarding bodies and contractors will be able to comply with requirements to only use registered contractors and subcontractors.
- Various protections are built in so that
    - A contractor won't be in violation for working on a private job that is later determined to be public work;
    - The inadvertent listing of an unregistered subcontractor on a bid won't necessarily invalidate that bid;
    - A contract with an unregistered contractor or subcontractor is subject to cancellation but is not void as to past work;
    - An unregistered contractor or subcontractor can be replaced with one who is registered;
    - A contractor whose registration lapses will have a 90 day grace period within which to pay a late fee and renew.
- Registrations will begin after July 1, 2014, once the registration system is ready to go online. The preferred method of payment will be by credit card.
- The requirement to list only registered contractors and subcontractors on bids becomes effective on March 1, 2015. The requirement to only use registered contractors and subcontractors on public works projects applies to all projects awarded on or after April 1, 2015.

Essentials of Public Works Enforcement Fund:

All contractor registration fees will go into the State Public Works Enforcement Fund and be used to fund the following items --

- administration of contractor registration requirement
- all DIR costs for administering and enforcing public works laws
- Labor Commissioner's enforcement of other Labor Code violations on monitored public works projects.

DIR will no longer charge awarding bodies for prevailing wage compliance monitoring and enforcement by the CMU. (*Note: DIR will continue to bill and collect fees from awarding agencies for CMU services provided through June 20, 2014.*)

Related changes in DIR's administration and enforcement of public works requirements:

- Requirements to use CMU or specified alternative (labor compliance program or project labor agreement) for state bond-funded and other specified projects have been eliminated and replaced by requirements that apply to all public works projects (as defined under the Labor Code).
- Awarding bodies are *now* required to submit PWC-100 (contract award notice) for all public works projects. (*This requirement previously applied to about 90% of all projects.*)
- Contractors and subcontractors on *all* public works projects will be required to submit certified payroll records (CPRs) to the Labor Commissioner unless excused from this requirement.
    - This requirement will be phased in as follows:
        - Applies immediately to public works projects that have already been under CMU monitoring, *i.e.* contractors on ongoing projects that have been submitting CPRs to the CMU will continue doing so
        - Will apply to any new projects awarded on or after April 1, 2015
        - May apply to other projects as determined by Labor Commissioner
        - Will apply to all public works projects, new or ongoing, on and after January 1, 2016
    - The Labor Commissioner may make exception to this requirement for
        - Projects covered by qualifying project labor agreement
        - Projects undertaken by one of four remaining awarding bodies with legacy LCPs (Caltrans, City of Los Angeles, County of Sacramento, and Los Angeles Unified School District), so long as those LCPs remain approved by DIR
    - CPRs will be furnished online (as is done currently for CMU). DIR intends to continue making improvements to this process, including creating a means for general contractors to have online access to the CPRs submitted by their subcontractors.
- Requirements for awarding bodies to adopt and enforce a DIR-approved LCP are now limited to: (1) public works projects awarded prior to January 1, 2012 that were under a preexisting LCP requirement; and (2) projects funded in whole or in part by Proposition 84.

Date: 07/22/2014

Clear

Public Works Contractor Registration Affidavit

Contractor Information | Legal Entity Information | Workers Compensation | Contractor Certification | Payment Method

Contractor Legal Name:

Contractor Legal Entity:

Contractor Trade Name or doing business as

Rows 1 to 1 of 1

Trade Name	
	Add Another Remove

CSLB and/or Professional License

Rows 1 to 1 of 1

License Type	License Number	
		Add Another Remove

Contractor Mailing Address

Street Address

City

State

Zip Code

State of California
Department of Industrial Relations
Division of Labor Standards Enforcement

Public Works Contractor Registration Search

This is a listing of current and active contractor registrations pursuant to Division 2, Part 7, Chapter 1(commencing with section 1720) of the California Labor Code.

Enter at least one search criteria to display active registered public works contractor(s) matching your selections.

Registration Number:

Contractor Legal Name: Contractor License Lookup

License Number:

Public Works Contractor Registration Web Search Results
No Registered Contractors to display

Copyright © 2014 State of California

THE FOLLOWING DOCUMENTS

ARE TO BE COMPLETED AND

SUBMITTED WITH THE BID PACKAGE

Contractor's Name: _____
(Please print)

CITY OF SACRAMENTO

SEALED PROPOSAL

(MUST BE SIGNED BY BIDDER)

The Sealed Proposal will be received not later than **October 29, 2014**, at the Office of the City Clerk, New City Hall, at 915 I Street, 5th Floor, Public Counter, Sacramento, California and opened at 2:00 PM, or as soon thereafter as business allows, on **October 29, 2014**, by the Office of the City Clerk, 915 I Street, Historic City Hall, 2nd Floor, Hearing Room, Sacramento, California.

TO THE HONORABLE CITY COUNCIL:

The undersigned hereby proposes and agrees to furnish any and all required labor, material, transportation, and services for

GROUNDWATER WELL REHABILITATION PH 3
(PN: Z14110105) (B15141321010)

in the City and County of Sacramento, California.

TOTAL BID: _____ ($_____).

The work herein described is to be performed in strict conformity with the Plans, City of Sacramento Standard Specifications (Resolution No. 89-216) and these Special Provisions, all as on file in the Office of the City Clerk, at the following unit prices.

Item No.	Description	Estimated Quantity	Unit	Unit Price	Total
1	Pre-mobilization site video	1	LS	$_____	$_____
2	Mobilization, site setup, demobilization and site cleanup	8	EA	$_____	$_____
3	Pre-cleaning test pumping	8	EA	$_____	$_____
4	Pre-cleaning spinner log	8	EA	$_____	$_____
5	Traffic control	1	LS	$_____	$_____
6	Well casing video surveys	16	EA	$_____	$_____
7	Screen and casing repair	10	LF	$_____	$_____
8	Post-cleaning spinner logging	8	EA	$_____	$_____
9	Deviation survey	8	EA	$_____	$_____
10	Post-cleaning test pumping	8	EA	$_____	$_____
11	Waste solids disposal	1	LS	$_____	$_____
12	Brushing and Sediment Removal	2,661	LF	$_____	$_____
13	Agitating the Near-well Environment	828	LF	$_____	$_____
14	Mechanical Cleaning (NSF-approved surfactant & biodispersant)	8	EA	$_____	$_____
15	Chemical Cleaning (NSF-approved inhibitor, biodispersant, and 5% hydrochloric acid solution)	8	EA	$_____	$_____
16	Well Disinfection (pH-adjusted 100 mg/l chlorine soln.)	8	EA	$_____	$_____

Item No.	Description	Estimated Quantity	Unit	Unit Price	Total
17	Wastewater Treatment & Disposal	1	LS	$_____	$_____
18	Install 8" Flow Meter	8	EA	$_____	$_____
19	Electrical Improvements	1	LS	$_____	$_____
20	Install City Supplied Fluoride System	7	EA	$_____	$_____
21	Chain Link Fencing and Gates	1	LS	$_____	$_____
22	Wellhead Construction	8	EA	$_____	$_____
23	50 HP Submersible Pump Installation	5	EA	$_____	$_____
24	75 HP Submersible Pump Installation	2	EA	$_____	$_____
25	100 HP Submersible Pump Installation	1	EA	$_____	$_____
26	Pump Column Piping - 6 inch	380	LF	$_____	$_____
27	Pump Column Piping - 8 inch	545	LF	$_____	$_____
28	Pump Column Piping - 10 inch	140	LF	$_____	$_____
29	Site Paving	2,710	SQ FT	$_____	$_____
30	Sand Pit	3	EA	$_____	$_____
31	6" Sewer Laterals	475	LF	$_____	$_____
32	Sewer Manhole	1	EA	$_____	$_____
33	Chemical Shed Relocation	2	EA	$_____	$_____

TOTAL BID: $_____

If awarded the contract, the undersigned shall execute said contract and furnish the necessary bonds within ten (10) days after the notice of award of said contract and begin work within fifteen (15) days after the signing of the contract by the Contractor and the City or the Notice to Proceed has been prepared, whichever is applicable.

In determining the amount bid by each bidder, City shall disregard mathematical errors in addition, subtraction, multiplication and division that appear obvious on the face of the Proposal. When such a mathematical error appears on the Proposal, the City shall have the right to correct such error and to compute the total amount bid by said bidder on the basis of the corrected figure or figures.

When the unit price of an item is required to be set forth in the Proposal, and the total for the item set forth separately does not agree with a figure derived by multiplying the item unit price times the Engineer's estimate of the quantity of work to be performed for said item, the item unit price shall prevail over the sum set forth as the total for the item unless, in the sole discretion of the City, such a procedure would be inconsistent with the policy of the City's bidding procedures. The total paid for each such item of work shall be based upon the item unit price and not the total price.

Should the Proposal contain only a total price for an item and the item unit price is omitted, the City shall determine the item unit price by dividing the total price of the item by the Engineer's estimate of the quantity of work to be performed for the item of work.

If the Proposal contains neither the item price nor the total price for the item, then it shall be deemed incomplete and the Proposal shall be disregarded.

It is understood that this bid is based upon completion of the work within a period **of 210 working days** commencing on the date specified in the Notice to Proceed.

The amount of liquidated damages to be paid by the Contractor for failure to complete the work by the completion date (as extended, if applicable) shall be **One thousand dollars ($1,000)** **<u>for each calendar day</u>**, continuing to the time at which the work is completed. Such amount is the actual cash value agreed upon as the loss to the City resulting from the default of the Contractor.

The undersigned represents and warrants that he/she has examined the location of the proposed work and is familiar with the conditions at the place where the work is to be done. The undersigned further represents that he/she has reviewed and understands the Plans, Special Provisions, and other contract documents, and the undersigned is satisfied with all conditions for the performance of the work.

The undersigned has carefully checked all of the above figures and understands that the City of Sacramento will not be responsible for any errors or omissions on the part of the undersigned in making up this bid.

This proposal shall not be withdrawn for the time periods specified in Section 3-2 of the City of Sacramento Standard Specifications for award of contract to respective low bidders. This proposal is submitted in accordance with Chapter 3.60 of the Sacramento City Code and Sections 1, 2, and 3 of the City of Sacramento Standard Specifications.

In accordance with Standard Specification Section 3-2, the City shall award this contract to the lowest responsible bidder, if such award is made, within forty-five (45) working days after opening of the Proposals. The City reserves the right to reject any and all bids.

BID DEPOSIT ENCLOSED IN THE FOLLOWING FORM:

$_____not less than ten (10) percent of amount bid.

____CERTIFIED CHECK

____MONEY ORDER

____CASHIERS'S CHECK

____BID BOND

FOR CITY USE ONLY

TYPE OF DEPOSIT

- ☐ Bid Bond
- ☐ Cashier/Certified Check
- ☐ Other_____

Reviewer's Initials: _____

CONTRACTOR

Addendum No. 1 _____ _____

Addendum No. 2 _____ By:_____
(Signature)

Addendum No. 3 _____ Title:_____

Addendum No. 4 _____ Address:_____
No PO Box – Physical Address ONLY

_____
City STATE ZIIP Code

Telephone No. _____

Fax No. _____

Email _____

(Federal Tax ID # or Social Security #)
Under penalty of perjury, I certify that the Taxpayer Identification Number and all other information provided here are correct.

_____

Valid Contractor's License No. _____, Classification _____ is held by the bidder.

Expiration date _____. Representation made herein are true and correct under penalty or perjury

PN: Z14110105 (B15141321010)

KNOW ALL MEN BY THESE PRESENTS,

That we, _____

as Principal, and _____

a corporation duly organized under the laws of the State of _____and duly licensed to become sole surety on bonds required or authorized by the State of California, as Surety, are held and firmly bound unto the City of Sacramento, hereinafter called the City, in the penal sum of ten percent (10%) of the (BASE OR LUMP SUM) Proposal of the Principal above named, or other amount as set forth in the Invitation to Bidders, submitted by said Principal to the City for the Work described below, for the payment of which sum in lawful money of the United States, well and truly to be made, we bind ourselves, our heirs, executors, administrators and successors, jointly and severally, firmly by these presents.

THE CONDITION OF THIS OBLIGATION IS SUCH

That whereas the Principal has submitted the above mentioned proposal to the City, for which Proposals are to be opened by the Office of the City Clerk, Historic City Hall, Hearing Room, 2nd Floor, 915 I Street, Sacramento, California, on **October 29, 2014**, for the Work specifically described as follows:

GROUNDWATER WELL REHABILITATION PH 3
(PN: Z14110105) (B15141321010)

NOW, THEREFORE, if the aforesaid Principal is award the Agreement and within the time and manner required under the Contract Documents, enters into a written Agreement, in the prescribed form, in accordance with the Proposal, and files two (2) bonds with the City, one to guarantee faithful performance and the other to guarantee payment for labor and materials, and files the required insurance policies with the City, all as required by the Contract Documents or by law, then the obligation shall be null and void; otherwise it shall be and remain in full force and effect.

In the event suit is brought upon this bond by the Obligee and judgment is recovered, the Surety shall pay all costs incurred by the Obligee in such suit, including a reasonable attorney's fee to be fixed by the court, which sums shall be additional to the principal amount of this bond.

IN WITNESS THEREOF, We have hereunto set our hands and seal this _____day of _____, 2014.

_____
PRINCIPAL Seal

By: _____

_____
Title

_____
SURETY Seal

By _____

_____
Title

_____
Agent Name and Address

_____

_____
Agent Phone #

_____
Surety Phone #

_____
California License #

City of SACRAMENTO

Subcontractor and Local Business Enterprise (LBE) Participation Verification Form For Public Projects Over $100,000

THIS FORM MUST BE SUBMITTED WITH THE SEALED BID PROPOSAL

To be eligible for award of this contract, the bidder shall list all subcontractors who perform work, labor, or render service in an amount in excess of one-half of 1 percent of the total bid amount. In the case of bids for the construction of streets and highways, including bridges, subcontractors whose subcontract value exceeds one-half of 1 percent of the total bid or ten thousand dollars ($10,000), whichever is greater, shall be listed.
In addition, the bidder shall list any business entity used to attain the 5% LBE requirement. Estimated dollar values shall be provided for **all** work/services/supplies listed. The inclusion of false information or the omission of required information will render the bid non-responsive.

Prime Contractor Name: _____ Address: _____
Bid Amount: _____ Is Prime Contractor a LBE? Yes____ No____ Total LBE Participation %: _____ Date: _____

Business Entity Name/Address/Contact Person/Telephone/Email	Sub-contractor license number	Indicate LBE (subject to verification)	Describe Exact Type of Work/Services/Supplies to be provided to complete contract	Estimated Dollar Value of Work/Services/Supplies to be Performed or Provided	Percentage of Prime Contract	For Office Use Only (calculation)

I hereby certify that each subcontractor listed on this Subcontractor and LBE Participation Verification Form has been notified that it has been listed and has consented in writing to its name being submitted for this contract. Additionally, I certify that I shall notify each business entity listed on this Form, in writing, if the award is granted to my firm, and I shall make all documentation relevant to subcontractor and LBE participation available to the City of Sacramento upon request. I further certify that all information contained in this Form is true and correct and I acknowledge that the City will rely on the truth of the information in awarding the contract.
PRINCIPAL OF FIRM:

_____ _____ _____
(Signature) (Title) (Date)

COPY AND ATTACH ADDITIONAL SHEETS AS NECESSARY

Form Updated 2/3/2014

DRUG-FREE WORKPLACE POLICY AND AFFIDAVIT

BID MAY BE DECLARED NONRESPONSIVE IF THIS FORM (COMPLETED) IS NOT ATTACHED.
Pursuant to City Council Resolution CC90-498 dated 6/26/90 the following is required.

The undersigned contractor certifies that it and all subcontractors performing under this contract will provide a drug-free workplace by:

1. Publishing a "Drug-Free Workplace" statement notifying employees that the unlawful manufacture, distribution, dispensing, possession or use of a controlled substance is prohibited in the contractor's workplace and specifying the actions that will be taken against employees for violations of such prohibition.

2. Establishing a Drug-Free Awareness Program to inform employees about:

   a. The dangers of drug abuse in the workplace.
   b. The contractor's policy of maintaining a drug-free workplace.
   c. Any available drug counseling, rehabilitation, and employee assistance program.
   d. The penalties that may be imposed upon employees for drug abuse violations occurring in the workplace.

3. Notify employees that as a condition of employment under this contract, employees will be expected to:

   a. Abide by the terms of the statement.
   b. Notify the employer of any criminal drug statute conviction for a violation occurring in the workplace.

4. Making it a requirement that each employee to be engaged in the performance of the contract be given a copy on the "Drug-Free Workplace" statement.

5. Taking one of the following appropriate actions, within thirty (30) days of receiving notice from an employee or otherwise receiving such notice, that said employee has received a drug conviction for a violation occurring in the workplace:

   a. Taking appropriate disciplinary action against such an employee, up to and including termination; or
   b. Requiring such employee to participate satisfactorily in a drug abuse assistance or rehabilitation program approved for such purposes by a federal, state, or local health, law enforcement or other appropriate agency.

* I certify that no person employed by this company, corporation, or business has been convicted of any criminal drug statute violation on any job site or project where this company, corporation, or business was performing work within three years of the date of my signature below.

EXCEPTION:

_____

Date Violation Type Place of Occurrence

If additional space is required use back of this form.

*The above statement will also be incorporated as a part of each subcontract agreement for any and all subcontractors selected for performance on this project.

IN THE EVENT THIS COMPANY, CORPORATION, OR BUSINESS IS AWARDED THIS CONSTRUCTION CONTRACT, AS A RESULT OF THIS BID; THE CONTRACTOR WITH HIS/HER SIGNATURE REPRESENTS TO THE CITY THAT THE INFORMATION DISCLOSED IN THIS DOCUMENT IS COMPLETE AND ACCURATE. IT IS UNDERSTOOD AND AGREED THAT FALSE CERTIFICATION IS SUBJECT TO IMMEDIATE TERMINATION BY THE CITY.

The Representations Made Herein On This Document Are Made Under Penalty Of Perjury.

CONTRACTOR'S NAME:_____

BY:_____Date:_____

Signature Title

Effects of violations: a. Suspension of payments under this contract. b. Suspension or termination of the contract. c. Suspension or debarment of the contractor from receiving any contract from the City of Sacramento for a period not to exceed five years.
FM 681 7/10/9

MINIMUM QUALIFICATIONS QUESTIONNAIRE

Sacramento City Code Section 3.60.020 authorizes the Sacramento City Council to adopt standard minimum qualifications for bidders on competitively bid public works construction projects, and requires, among other provisions, that a bidder meet such minimum qualifications at the time of bid opening in order to bid. On July 31, 2007, the City Council adopted Resolution No. 2007-574 establishing these standard minimum qualifications. Pursuant to City Code section 3.60.020, a bidder failing to meet these minimum qualifications at the time of bid opening shall not be considered a responsible bidder for purposes of bidding on the subject project.

All bidders must demonstrate compliance with the minimum qualifications established by Resolution No. 2007-574 by completing all of the questions contained in this questionnaire. Bidder responses shall be limited to those operating business units, offices, branches and/or subsidiary divisions of the bidder that will be involved with the performance of any project work if awarded the contract. If a bidder answers "yes" to any single question, fails to submit a fully completed questionnaire, or submits false information, this will result in a determination that the minimum qualifications are not met, and the bidder shall not be considered a qualified bidder for purposes of bidding on this contract. If two or more entities submit a bid on a contract as a Joint Venture, each entity within the Joint Venture must separately meet these minimum qualifications for the Joint Venture to be considered a qualified bidder.

The City of Sacramento ("City") shall make its determination on the basis of the submitted questionnaire, as well as any relevant information that is obtained from others or as a result of investigation by the City. While it is the intent of this questionnaire to assist the City in determining whether bidders possess the minimum qualifications necessary to submit bids on the City's competitively bid public works construction contracts, the fact that a bidder submits a questionnaire demonstrating that it meets these minimum qualifications shall not in any way limit or affect the City's ability to: (1) review other information contained in the bid submitted by the bidder, and additional relevant information, and determine whether the contractor is a responsive and/or responsible bidder; or (2) establish pre-qualification requirements for a specific contract or contracts.

By submitting this questionnaire, the bidder consents to the disclosure of its questionnaire answers: (i) to third parties for purposes of verification and investigation; (ii) in connection with any protest, challenge or appeal of any action taken by the City; and (iii) as required by any law or regulation, including without limitation the California Public Records Act (Calif. Gov't Code sections 6250 et seq.). Each questionnaire must be signed under penalty of perjury in the manner designated at the end of the form, by an individual who has the legal authority to bind the bidder submitting the questionnaire. If any information provided by a bidder becomes inaccurate, the bidder shall immediately notify the City and provide updated accurate information in writing, under penalty of perjury.

QUESTIONNAIRE

NOTICE: **For firms that maintain other operating business units, offices, branches and/or subsidiary divisions that will not be involved with the performance of any project work if the firm is awarded the contract, references hereafter to "your firm" shall mean only those operating business units, offices, branches and/or subsidiary divisions that will be involved with the performance of any project work.**

All of the following questions regarding "your firm" refer to the firm (corporation, partnership or sole proprietor) submitting this questionnaire, as well as any firm(s) with which any of your firm's owners, officers, or partners are or have been associated as an owner, officer, partner or similar position within the last five years

The firm submitting this questionnaire shall not be considered a responsible bidder if the answer to any of these questions is "yes", or if the firm submits a questionnaire that is not fully completed or contains false information.

1. **Classification & Expiration Date(s) of California** Contractor's License Number(s) held by firm:

   _____

2. Has a contractor's license held by your firm and/or any owner, officer or partner of your firm been revoked at anytime in the last five years?

   ☐ Yes ☐ No

3. Within the last five years, has a surety firm completed a contract on your firm's behalf, or paid for completion of a contract to which your firm was a party, because your firm was considered to be in default or was terminated for cause by the project owner?

   ☐ Yes ☐ No

4. At the time of submitting this minimum qualifications questionnaire, is your firm ineligible to bid on or be awarded a public works contract, or perform as a subcontractor on a public works contract, pursuant to either California Labor Code section 1777.1 (prevailing wage violations) or Labor Code section 1777.7 (apprenticeship violations)?

   ☐ Yes ☐ No

5. At any time during the last five years, has your firm, or any of its owners, officers or partners been convicted of a crime involving the awarding of a contract for a government construction project, or the bidding or performance of a government contract?

   ☐ Yes ☐ No

6. Answer either subsection A or B, as applicable:

A. Your firm has completed three or more government construction contracts in Sacramento County within the last five years: Within those five years, has your firm been assessed liquidated damages on three or more government construction contracts in Sacramento County for failure to complete contract work on time?

NOTE: If there is a pending administrative or court action challenging the assessment of liquidated damages on a government contract within the last five years, you need not include that contract in responding to this question.

☐ Yes ☐ No ☐ Not applicable

OR

B. Your firm has not completed at least three government construction contracts in Sacramento County within the last five years: Within the last three years, has your firm been assessed liquidated damages on three or more government construction contracts for failure to complete contract work on time?

NOTE: If there is a pending administrative or court action challenging an assessment of liquidated damages on a government contract within the last three years, you need not include that contract in responding to this question.

☐ Yes ☐ No ☐ Not applicable

7. In the last three years has your firm been debarred from bidding on, or completing, any government agency or public works construction contract for any reason?

NOTE: If there is a pending administrative or court action challenging a debarment, you need not include that debarment in responding to this question.

☐ Yes ☐ No

8. Has CAL OSHA assessed a total of three or more penalties against your firm for any "serious" or "willful" violation occurring on construction projects performed in Sacramento County at any time within the last three years?

NOTE: If there is a pending administrative or court action appealing a penalty assessment, you need not include that penalty assessment in responding to this question.

☐ Yes ☐ No

9. Answer <u>either</u> subsection A or B, as preferred:

A. In the last three years has your firm had a three year average Workers' Compensation experience modification rate exceeding 1.1?

☐ Yes ☐ No

OR

B. In the last three years has your firm had a three-year average incident rate for total lost workday cases exceeding 10?

NOTE: Incident rates represent the number of lost workday cases per 100 full-time workers and is to be calculated as: (N/EH) x 200,000, where

N	**=**	**number of lost workday cases (as defined by the U.S. Dept. of Labor, Bureau of Labor Statistics)**
EH	**=**	**total hours worked by all employees during the calendar year**
200,000	**=**	**base for 100 equivalent full-time working (working 40 hours per week, 50 weeks per year)**

☐ Yes ☐ No

10. In the past three years, has the federal EPA, Region IX or a California Air Quality Management District or Regional Water Quality Control Board assessed penalties three or more times, either against your firm, or against the project owner for a violation resulting in whole or in part from any action or omission by your firm on a project on which your firm was a contractor in Sacramento County?

NOTE: If there is a pending administrative or court action appealing a penalty assessment, you need not include that penalty assessment in responding to this question.

☐ Yes ☐ No

11. In the past three years, has the federal EPA, Region IX or a California Air Quality Management District or Regional Water Quality Control Board assessed a single penalty of $100,000 or more, either against your firm, or against the project owner for a violation resulting in whole or in part from any action or omission by your firm on a project on which your firm was the contractor in Sacramento County?

NOTE: If there is a pending administrative or court action appealing a penalty assessment, you need not include that penalty assessment in responding to this question.

☐ Yes ☐ No

12. In the past three years, have civil penalties been assessed against your firm pursuant to California Labor Code 1777.7 for violation of California public works apprenticeship requirements, three or more times?

NOTE: If there is a pending administrative or court action appealing a penalty assessment, you need not include that penalty assessment in responding to this question.

☐ Yes ☐ No

13. In the past three years, has a public agency in California withheld contract payments or assessed penalties against your firm for violation of public works prevailing wage requirements, three or more times?

NOTE: If there is a pending administrative or court action appealing a withholding or penalty assessment, you need not include that withholding or penalty assessment in responding to this question.

☐ Yes ☐ No

14. Has your firm been assessed penalties for violation of public works prevailing wage requirements in California, in an aggregate amount for the past three years of $50,000 or more?

NOTE: If there is a pending administrative or court action appealing a penalty assessment, you need not include that penalty assessment in responding to this question.

☐ Yes ☐ No

VERIFICATION AND SIGNATURE

I, the undersigned, certify and declare that I have read all the foregoing answers to this Minimum Qualifications Questionnaire, and know their contents. The matters stated in these Questionnaire answers are true of my own knowledge and belief, except as to those matters stated on information and belief, and as to those matters I believe them to be true. I declare under penalty of perjury under the laws of the State of California that the foregoing is true and correct.

Signed at _____, on _____.
(Location) (Date)

Signature: _____

Print name: _____

Title: _____

NOTE: If two or more entities submit a bid on a contract as a Joint Venture, each entity within the Joint Venture must submit a separate Minimum Qualifications Questionnaire.

REQUIREMENTS OF THE NON-DISCRIMINATION IN EMPLOYEE BENEFITS CODE

INTRODUCTION

The Sacramento Non-Discrimination In Employee Benefits Code (the "Ordinance"), codified as Sacramento City Code Chapter 3.54, prohibits City contractors from discriminating in the provision of employee benefits between employees with spouses and employees with domestic partners, and between the spouses and domestic partners of employees.

APPLICATION

The provisions of the Ordinance apply to any contract or agreement (as defined below), between a Contractor and the City of Sacramento, in an amount exceeding $100,000.00. The Ordinance applies to that portion of a contractor's operations that occur: (i) within the City of Sacramento; (ii) on real property outside the City of Sacramento if the property is owned by the City or if the City has a right to occupy the property; or (iii) at any location where a significant amount of work related to a City contract is being performed.

The Ordinance does not apply: to subcontractors or subcontracts of any Contractor or contractors; to transactions entered into pursuant to cooperative purchasing agreements approved by the Sacramento City Council; to legal contracts of other governmental jurisdictions or public agencies without separate competitive bidding by the City; where the requirements of the ordinance will violate or are inconsistent with the terms or conditions of a grant, subvention or agreement with a public agency or the instructions of an authorized representative of any such agency with respect to any such grant, subvention or agreement; to permits for excavation or street construction; or to agreements for the use of City right-of-way where a contracting utility has the power of eminent domain.

DEFINITIONS

As set forth in the Ordinance, the following definitions apply:

"Contract" means an agreement for public works or improvements to be performed, or for goods or services to be purchased or grants to be provided, at the expense of the City or to be paid out of moneys deposited in the treasury or out of the trust money under the control or collected by the City. "Contract" also means a written agreement for the exclusive use ("exclusive use" means the right to use or occupy real property to the exclusion of others, other than the right reserved by the fee owner) or occupancy of real property for a term exceeding 29 days in any calendar year, whether by singular or cumulative instrument, (i) for the operation or use by others of real property owned or controlled by the City for the operation of a business, social, or other establishment or organization, including leases, concessions, franchises and easements, or (ii) for the City's use or occupancy of real property owned by others, including leases, concessions, franchises and easements.

"Contract" shall not include: a revocable at-will use or encroachment permit for the use of or encroachment on City property regardless of the ultimate duration of such permit; excavation, street construction or street use permits; agreements for the use of City right-of-way where a contracting utility has the power of eminent domain; or agreements governing the use of City property that constitute a public forum for activities that are primarily for the purpose of espousing or advocating causes or ideas and that are generally protected by the First Amendment to the United States Constitution or that are primarily recreational in nature.

“Contractor” means any person or persons, firm partnership or corporation, company, or combination thereof, that enters into a Contract with the City. “Contractor” does not include a public entity.

“Domestic Partner” means any person who has a currently registered domestic partnership with a governmental entity pursuant to state or local law authorizing the registration.

“Employee Benefits” means bereavement leave; disability, life, and other types of insurance; family medical leave; health benefits; membership or membership discounts; moving expenses; pension and retirement benefits; vacation; travel benefits; and any other benefit given to employees. “Employee benefits” shall not include benefits to the extent that the application of the requirements of this chapter to such benefits may be preempted by federal or state.

CONTRACTOR’S OBLIGATION TO PROVIDE THE CITY WITH DOCUMENTATION AND INFORMATION

Contractor shall provide the City with documentation and information verifying its compliance with the requirements of the Ordinance within ten (10) days of receipt of a request from the City. Contractors shall keep accurate payroll records, showing, for each City Contract, the employee’s name, address, Social Security number, work classification, straight time pay rate, overtime pay rate, overtime hours worked, status and exemptions, and benefits for each day and pay period that the employee works on the City Contract. Each request for payroll records shall be accompanied by an affidavit to be completed and returned by the Contractor, as stated, attesting that the information contained in the payroll records is true and correct, and that the Contractor has complied with the requirements of the Ordinance. A violation of the Ordinance or noncompliance with the requirements of the Ordinance shall constitute a breach of contract.

EMPLOYER COMPLIANCE CERTIFICATE AND NOTICE REQUIREMENTS

(a) All contractors seeking a Contract subject to the Ordinance shall submit a completed Declaration of Compliance Form (attachment “A”), signed by an authorized representative, with each proposal, bid or application. The Declaration of Compliance shall be made a part of the executed contract, and will be made available for public inspection and copying during regular business hours.

(b) The Contractor shall give each existing employee working directing on a City contract, and (at the time of hire), each new employee, a copy of the notification provided as attachment “B.”

(c) Contractor shall post, in a place visible to all employees, a copy of the notice provided as attachment “C.”

DECLARATION OF COMPLIANCE
Equal Benefits Ordinance

_____
Name of Contractor

_____
Address

The above named contractor ("Contractor") hereby declares and agrees as follows:

1. I have read and understand the Requirements of the Non-Discrimination In Employee Benefits Code (the "Requirements") provided to me by the City of Sacramento ("City") in connection with the City's request for proposals or other solicitations for the performance of services, or for the provision of commodities, under a City contract or agreement ("Contract").

2. As a condition of receiving the City Contract, I agree to fully comply with the Requirements, as well as any additional requirements that may be specified in the City's Non-Discrimination in Employee Benefits Code codified at Chapter 3.54 of the Sacramento City Code (the "Ordinance").

3. I understand, to the extent that such benefits are not preempted or prohibited by federal or state law, employee benefits covered by the Ordinance, are any of the following:

   a. Bereavement Leave
   b. Disability, life, and other types of insurance
   c. Family medical leave
   d. Health benefits
   e. Membership or membership discounts
   f. Moving expenses
   g. Pension and retirement benefits
   h. Vacation
   i. Travel benefits
   j. Any other benefit offered to employees

   I agree that should I offer any of the above listed employee benefits, that I will offer those benefits, without discrimination between employees with spouses and employees with domestic partners, and without discrimination between the spouses and domestic partners of such employees.

4. I understand that I will not be considered to be discriminating in the provision or application of employee benefits under the following conditions or circumstances:

   a. In the event that the actual cost of providing a benefit to a domestic partner or spouse, exceeds the cost of providing the same benefit to a spouse or domestic partner of an employee, I will not be required to provide the benefit, nor shall it be deemed discriminatory, if I require the employee to pay the monetary difference in order to provide the benefit to the domestic partner or to the spouse.

   b. In the event I am unable to provide a certain benefit, despite taking reasonable measures to do so, if I provide the employee with a cash equivalent, I will not be deemed to be discriminating in the application of that benefit.

   c. If I provide employee benefits neither to employee's spouses nor to employee's domestic partners.

   d. If I provide employee benefits to employees on a basis unrelated to marital or domestic partner status.

   e. If I submit, to the Program Coordinator, written evidence of making reasonable efforts to end discrimination in employee benefits by implementing policies which are to be enacted before the

first effective date after the first open enrollment process following the date the Contract is executed with the City.

I understand that any delay in the implementation of such policies may not exceed one (1) year from the date the Contract is executed with the City, and applies only to those employee benefits for which an open enrollment process is applicable.

f. Until administrative steps can be taken to incorporate, in the infrastructure, nondiscrimination in employee benefits

The time allotted for these administrative steps will apply only to those employee benefits for which administrative steps are necessary and may not exceed three (3) months from the date the Contract is executed with the City.

g. Until the expiration of a current collective bargaining agreement(s) where, in fact, employee benefits are governed by a collective bargaining agreement(s).

h. I take all reasonable measures to end discrimination in employee benefits by either requesting the union(s) involved agree to reopen the agreement(s) in order for me to take whatever steps are necessary to end discrimination in employee benefits or by my ending discrimination in employee benefits without reopening the collective bargaining agreement(s).

i. In the event I cannot end discrimination in employee benefits despite taking all reasonable measures to do so, I provide a cash equivalent to eligible employees for whom employee benefits (as listed previously), are not available.

Unless otherwise authorized in writing by the City Manager, I understand this cash equivalent must begin at the time the union(s) refuse to allow the collective bargaining agreement(s) to be reopened or no longer than three (3) months from the date the Contract is executed with the City.

5. I understand that failure to comply with the provisions of Section 4. (a) through 4. (i), above, will subject me to possible suspension and/or termination of this Contract for cause; repayment of any or all of the Contract amount disbursed by the City; debarment for future contracts until all penalties and restitution have been paid in full; deemed ineligible for future contracts for up to two (2) years; the imposition of a penalty, payable to the City, in the sum of $50.00 for each employee, for each calendar day during which the employee was discriminated against in violation of the provisions of the Ordinance.

6. I understand and do hereby agree to provide each current employee and, within ten (10) days of hire, each new employee, of their rights under the Ordinance. I further agree to maintain a copy of each such letter provided, in an appropriate file for possible inspection by an authorized representative of the City. I also agree to prominently display a poster informing each employee of these rights.

7. I understand that I have the right to request an exemption to the benefit provisions of the Ordinance when such a request is submitted to the Procurement Services Division, in writing with sufficient justification for resolution, prior to contract award.

I further understand that the City may request a waiver or exemption to the provisions or requirements of the Ordinance, when only one contractor is available to enter into a contract or agreement to occupy and use City property on terms and conditions established by the City; when sole source conditions exist for goods, services, public project or improvements and related construction services; when there are no responsive bidders to the Ordinance requirements and the contract is for essential goods or services; when emergency conditions with public health and safety implications exist; or when the contract is for specialized legal services if in the best interest of the City.

8. In consideration of the foregoing, I shall defend, indemnify and hold harmless, the City, its officers and employees, against any claims, actions, damages, costs (including reasonable attorney fees), or other liabilities of any kind arising from any violation of the Requirements or of the Ordinance by me.

I declare under penalty of perjury under the laws of the State of California that the foregoing is true and correct, and that I am authorized to bind the Contractor to the provisions of this Declaration.

_____ _____

Signature of Authorized Representative Date

_____

Print Name

_____

Title

YOUR RIGHTS UNDER THE CITY OF SACRAMENTO'S

NON-DISCRIMINATION IN EMPLOYEE BENEFITS BY CITY CONTRACTORS ORDINANCE

On …….. (date), your employer (the "Employer") entered into a contract with the City of Sacramento (the "City") for …….. (contract details), and as a condition of that contract, agreed to abide by the requirements of the City's Non-Discrimination In Employee Benefits By City Contractors Ordinance (Sacramento City Code Section 3.54).

The Ordinance does not require the Employer to provide employee benefits. The Ordinance does require that if certain employee benefits are provided by the Employer, that those benefits be provided without discrimination between employees with spouses and employees with domestic partners, and without discrimination between the spouse or domestic partner of employees.

The Ordinance covers any employee working on the specific contract referenced above, but only for the period of time while those employees are actually working on this specific contract.

The included employee benefits are:

- Bereavement leave
- Disability, life and other types of insurance
- Family medical leave
- Health benefits
- Membership or membership discounts
- Moving expenses
- Pension and retirement benefits
- Vacation
- Travel benefits
- Any other benefits given to employees

(Employee Benefits does not include benefits that may be preempted by federal or state law.)

If you feel you have been discriminated or retaliated against by your employer in the terms and conditions of your application for employment, or in your employment, or in the application of these employee benefits, because of your status as an applicant or as an employee protected by the Ordinance, or because you reported a violation of the Ordinance, and after having exhausted all remedies with your employer,

You May . . .

- Submit a written complaint to the City of Sacramento, Contract Services Unit, containing the details of the alleged violation. The address is:

  City of Sacramento
  Contract Services Unit
  915 I St., 2nd Floor
  Sacramento, CA 95814

- Bring an action in the appropriate division of the Superior Court of the State of California against the Employer and obtain the following remedies:

  - Reinstatement, injunctive relief, compensatory damages and punitive damages

  - Reasonable attorney's fees and costs

YOUR RIGHTS UNDER THE CITY OF SACRAMENTO'S

NON-DISCRIMINATION IN EMPLOYEE BENEFITS BY CITY CONTRACTORS ORDINANCE

If your employer provides employee benefits, they must be provided to those employees working on a City of Sacramento contract without discriminating between employees with spouses and employees with domestic partners.

The included employee benefits are:

- Bereavement leave
- Disability, life and other types of insurance
- Family medical leave
- Health benefits
- Membership or membership discounts
- Moving expenses
- Pension and retirement benefits
- Vacation
- Travel benefits
- Any other benefits given to employees

If you feel you have been discriminated against by your employer . . .

You May . . .

- Submit a written complaint to the City of Sacramento, Contract Services Unit, containing the details of the alleged violation. The address is:

  City of Sacramento
  Contract Services Unit
  915 I St., 2nd Floor
  Sacramento, CA 95814

- Bring an action in the appropriate division of the Superior Court of the State of California against the employer and obtain reinstatement, injunctive relief, compensatory damages, punitive damages and reasonable attorney's fees and costs.

Discrimination and Retaliation Prohibited.

If you feel you have been discriminated or retaliated against by your employer in the terms and conditions of your application for employment, or in your employment, because of your status as an applicant or as an employee protected by the Ordinance, or because you reported a violation of this Ordinance . . .

You May Also . . .

Submit a written complaint to the City of Sacramento, Contract Services Unit, at the same address, containing the details of the alleged violation.

Construction and Demolition (C&D) Debris Recycling Requirements

As a condition of receiving this Contract, Contractor agrees to fully comply with the requirements specified herein for all demolition projects, as well as projects with a valuation of $250,000 or more:

1. **Definitions**. For purposes of this section, the following terms, words and phrases shall have the following meanings:

"Certified C&D sorting facility" means a facility that receives C&D debris and/or processes C&D debris into its component material types for reuse, recycling, and disposal of residuals and possesses a valid certificate as a C&D sorting facility from the Sacramento Regional County Solid Waste Authority.

"Construction and demolition debris" or "C&D debris" means used or commonly discarded materials resulting from construction, repair, remodel or demolition operations on any pavement, house, building, or other structure, or from landscaping that are not hazardous as defined in California Health and Safety Code section 25100 et seq. Such materials include, but are not limited to, concrete, asphalt, wood, metal, brick, dirt, sand, rock, gravel, plaster, glass, gypsum wallboard, cardboard and other associated packaging, roofing material, ceramic tile, carpeting, masonry, plastic pipe, trees, and other vegetative matter resulting from land clearing and landscaping.

"Divert" or "diversion" means to use materials for any purpose other than disposal in a landfill or transformation facility. Methods to divert materials include on-site reuse of the materials, delivery of materials from the project site to a certified C&D sorting facility or a recycling facility, or other methods as approved in regulations promulgated by the City Department of Utilities.

"Franchised waste hauler" means a person who possesses a valid commercial solid waste collection franchise issued by the Sacramento Regional County Solid Waste Authority.

"Mixed C&D debris" means loads that include commingled recyclable and non-recyclable C&D debris generated at a project site.

"Recyclable C&D debris" means C&D debris required to be diverted from landfills as specified in the Waste Management Plan and returned to the economic mainstream in the form of raw material for new, reused or reconstituted products that meet the quality standards necessary to be used in the marketplace.

"Recycling facility" means a facility or operation that receives, processes, and transfers source-separated recyclable materials.

"Source-separated C&D debris" means recyclable C&D debris that is separately sorted and containerized at the site of generation by individual material type and segregated from mixed C&D debris prior to collection and transporting.

"Waste log" means a record detailing the management of C&D debris generated by the covered project, including the date and weight/volume of material by type that was salvaged, reused, recycled or disposed.

2. **Waste Management Plan**. A completed WMP (see **Attachment 1**) must be submitted to and approved by the City prior to commencing any work on the project. The WMP must specify the types of C&D debris that will be generated from the project; the manner in which C&D debris will be managed and/or stored on the project site; the manner in which recyclable C&D debris generated from the project will be recycled or reuse; the person who will haul, collect or transport the recyclable C&D debris from the project site; and the certified C&D sorting facility or recycling facility where recyclable C&D debris will be delivered. The WMP must be approved by the City prior to commencing any work on the project.

3. Contractor shall be solely responsible for diverting the recyclable C&D materials specified on the WMP. Mixed C&D debris shall be delivered to a SWA-certified C&D sorting facility only. Only the permit holder, the person who generates the waste, a franchised waste hauler, or the City of Sacramento can transport or haul mixed C&D debris. Source-separated C&D debris may be delivered by any person to any recycling facility that accepts such materials. (See **Attachment 2** for list of C&D Debris Haulers and Facilities).

4. During the course of the project, Contractor shall maintain a waste log (see **Attachment 3**), and keep all weight tickets or weight receipts, for all C&D debris hauled away from the project. At a minimum, the waste log shall specify the C&D debris generated by the project; the manner in which C&D debris was recycled or re-used; and the facility where the C&D debris was delivered.

5. Within 30 days after submitting the project completion report, Contractor shall submit to the City a completed waste log, along with copies of supporting weight tickets. Contractor shall maintain and keep accurate and complete records of al bills, weight receipts or weight tickets that were issued for the collection, transport or disposal of C&D debris for a period of one-year after submittal of the waste log. The records shall be made available for inspection, examination and audit by the City during the one-year retention period to validate the information provided in the WMP and in the waste log. If the City determines noncompliance by the Contractor after an audit has been conducted, Contractor shall reimburse the City for all costs incurred in performing the audit.

6. Failure by Contractor to comply with any provisions specified herein will subject Contractor to possible suspension and/or termination of this Contract for cause; repayment of any or all of the Contract amount disbursed by the City; imposition of a penalty, payable to the City ($50-$250 for first offense, $251-$500 for second offense, and $501-$1500 for subsequent offenses); and/or submission of a performance security deposit fee when submitting a permit application to the City for a project within one year of imposition of the penalty.

For questions or to obtain more information about the Recycling Requirements for C&D debris, contact the City of Sacramento, Solid Waste Services Division, 2812 Meadowview Road, Building 1, Sacramento, CA 95832, or telephone (916) 808-4833, or email C&D@cityofsacramento.org

C&D Debris Waste Management Plan

C&D Debris Waste Management Plan
City of Sacramento Solid Waste Services
2812 Meadowview Road, Building 1
Sacramento, CA 95832
Phone: (916) 808-4839 / Fax: (916) 808-4999
C&D@cityofsacramento.org

Form submitted by:	
	Please attach a business card, or put your name with a phone number and/or an email address.

This Waste Management Plan (WMP) must be submitted and approved before work can begin. Only one WMP is required for each public construction project. The administration fee and, if applicable, a security deposit must be submitted with this form to be approved. Administration fee is 0.04% of project bid amount (min $40, max $800); security deposit, if applicable, is 1% of bid amount (max $10,000). The accompanying Waste Log must be submitted within 30 days of the project completion report, or a penalty may be imposed.

A. Building Project Information:

Job Address: _____ Engineering Estimate: _____
Contractor: _____ Phone: _____
Address: _____ Email: _____

B. Briefly describe the project:

_____

_____

_____

_____

_____

C. Materials Required to be Recycled

50% of all debris must be recycled if generated during the course of your project. You can either **source-separate** them, which may be hauled by anyone, or mix them in one container and send the **mixed C&D debris** load to a **Certified Mixed C&D Sorting Facility**. Mixed C&D loads can only be hauled by a franchised hauler or self-hauled. Please see the Definitions section, on the next page, for more information.

50%
of all debris must be recycled

D. Material Management.

1. **How will C&D debris will be stored on the project site**: _____ Mixed C&D _____ Source-Separated
2. **Company to haul away debris**: _____
3. **Facilities to receive debris**: _____

C&D Debris Waste Management Plan

C&D Debris Waste Management Plan
City of Sacramento Solid Waste Services
2812 Meadowview Road, Building 1
Sacramento, CA 95832
Phone: (916) 808-4839 / Fax: (916) 808-4999
C&D@cityofsacramento.org

E. Definitions.

Please read and understand these terms. Call Solid Waste at (916) 808-4833 if these terms are not clear to you. More information is also available online at http://www.cityofsacramento.org/utilities/.

1. **Self-haul or self-hauling**: This is when the general contractor or a subcontractor *who is doing work on the project* hauls their own waste materials for recycling or disposal. Note that a *jobsite cleanup crew is not doing other work on the project and is not self-hauling*. Jobsite cleanup crews need to be franchised in order to haul mixed C&D debris away.

2. **Franchised hauler**: Check the Department of Utilities (DOU) website for a list of these haulers. Only these companies and the City of Sacramento can collect and haul mixed C&D debris generated within the City for a fee.

3. **Source separation**: This means keeping wood, metal, cardboard, or other recyclables in separate containers, and sending the materials to an authorized recycler. A list of authorized recyclers can be found on the DOU web site. Source-separated materials may be hauled by anyone.

4. **Mixed C&D debris**: This means putting all recyclable debris into one container. Mixed materials must be sent to a certified mixed C&D sorting facility. Mixed materials may be either self-hauled or hauled by a franchised hauler. If your job site is crowded, this option saves the most space.

5. **Certified Mixed C&D Sorting Facility**: See the DOU web site for a list. These facilities have been certified by the Sacramento Regional Solid Waste Authority (SWA) to extract recyclable materials from mixed C&D debris.

F. Terms and Conditions

- Your approved Waste Management Plan and Waste Log must be kept on the job site for the duration of the project.
- City of Sacramento Solid Waste Services staff may enter the jobsite to inspect waste collection areas.
- **ALL** Clean Wood Waste (unpainted, untreated lumber, plywood and OSB), Inert Materials (concrete, asphalt paving, brick, block, and dirt), Wooden Pallets, Scrap Metal, and Corrugated Cardboard must be recycled.
- Only SWA-Certified Mixed C&D Sorting Facilities may be used to recycle these materials if mixed with other materials.
- Only the City of Sacramento, SWA-Franchised Haulers, or self-haulers (as defined above) may collect and transport mixed C&D material from the jobsite.
- C&D Debris may not be burned or dumped illegally.
- Your Waste Log must be completed and submitted, with supporting weight tickets, within 30 days of submitting your project completion report. All waste hauling and disposal or recycling activity must be entered on the Waste Log, including information from any subcontractors who self-hauled their own debris off-site.
- You must keep all receipts or weight-tickets from your project for a period of one year from the submittal of your waste log.
- Failure to comply with these terms and conditions may result in a fine and payment of a security deposit on future projects

C&D Debris Haulers & Facilities

C&D Debris Waste Management Plan
City of Sacramento Solid Waste Services
2812 Meadowview Road, Building 1
Sacramento, CA 95832
Phone: (916) 808-4833 / Fax: (916) 808-4999
C&D@cityofsacramento.org

Certified Mixed C&D Facilities

Allied Waste / Elder Creek Transfer and Recovery	(916) 387-8425
Florin-Perkins Public Disposal	(916) 443-5120
L&D Landfill	(916) 737-8640
Waste Management / K&M Recycle America	(916) 452-0142

Franchised Haulers

ACES Waste Services, Inc.	(866) 488-8837	Elk Grove Waste Management, LLC	(916) 689-4052
Allied Waste Services	(916) 631-0600	Mini Drops, Inc.	(916) 686-8785
All Waste Systems, Inc.	(916) 456-1555	Norcal Waste Services of Sacramento	(916) 381-5300
Atlas Disposal Industries, LLC	(916) 455-2800	North West Recyclers	(916) 686-8575
California Waste Recovery Systems	(916) 441-1985	Waste Management of Sacramento	(916) 387-1400
Central Valley Waste Services, Inc.	(209) 369-8274	Waste Removal & Recycling	(916) 453-1400
City of Sacramento Solid Waste	(916) 808-4839	Western Strategic Materials, Inc.	(916) 388-1076

Recyclers*

Bell Marine	(916) 442-9089
C & C Paper Recycling	(916) 920-2673
EBI Aggregates	(916) 372-7580
International Paper	(916) 371-4634
Modern Waste Solutions	(916) 447-6800
PRIDE Industries, Inc.	(916) 640-1300
Recycling Industries, Inc.	(916) 452-3961
Sacramento Local Conservation Corps	(916) 386-8394
Smurfit-Stone Container Corporation	(916) 381-3340
Southside Art Center	(916) 387-8080
Spencer Building Maintenance, Inc.	(916) 922-1900

Recovery Stations & Landfills

Elder Creek Recovery & Transfer Station	(916) 387-8425
Kiefer Landfill	(916) 875-5555
L & D Landfill	(916) 383-9420
North Area Recovery Station	(916) 875-5555
Sacramento Recycling & Transfer Station	(916) 379-0500
Waste Management Recycle America	(916) 452-0142

More updated information can be found online at:
http://www.cityofsacramento.org/utilities/

* Please note that any facility may receive source-separated recyclable materials as long as it is authorized to do so by the State of California. This is not meant to be a complete list.

C&D Debris Waste Log

C&D Debris Waste Management Plan
City of Sacramento Solid Waste Services
2812 Meadowview Road, Building 1
Sacramento, CA 95832
Phone: (916) 808-4839 / Fax: (916) 808-4999
C&D@cityofsacramento.org

Project address: _____

This waste log, and copies of supporting weight tickets, must be submitted to Solid Waste within 30 days of submitting the project completion report. The waste log and weight tickets must also be kept on file for one year after project completion.

Date	Hauler	Material	Destination	Amount

Hauler: Indicate the Franchisee, Self-Hauler, City of Sacramento, or other hauler who removed the material offsite.
Material: Indicate appropriate category: Scrap Metal, Inert Materials, Cardboard, Wooden Pallets, or Clean Wood Waste.
Destination: Indicate the facility that received the material for disposal or recycling
Amount: Indicate the weight. If weight is not known, put volume.

.

Green Contracting Survey
(Voluntary)

The City of Sacramento and the Sacramento Metropolitan Air Quality District (SMAQMD) are conducting a joint pilot project to help meet Federal Clean Air Standards for the Sacramento region.

Attached is a Green Contracting Fleet Inventory Form. Please complete the form, remove it from the bid package and return it to SMAQMD in the postage paid envelope provided with the bid package. Please do not return the Green Contracting Fleet Inventory Form to the City of Sacramento with the bid documents or otherwise.

A limited amount of funds and other financial incentives may be available to qualified contractors participating in this joint project to assist qualified contractors with upgrading and/or replacing equipment and/or trucks.

Completing and returning the Green Contracting Fleet Inventory Form is strictly voluntary

Voluntary Green Contracting Fleet Inventory List (On-Road Equipment)

In partnership with the City of Sacramento and the Sacramento Metropolitan Air Quality Management District

Company Name:	
Contact Name:	
Company Address:	
City, State, ZIP:	
Company Phone:	

	City Bid Information
Department	
Project #	
LBE	

Instructions:

a) Please enter the vehicle / equipment information for each unit used in conjunction with your City of Sacramento Bid.
b) All fields are required for both on-road heavy-duty vehicles and off-road construction equipment over 50 HP.
c) Electronic version available at http://www.airquality.org/ceqa/index.shtml
d) For additional questions, please call (916) 874-4892

Please Submit To:

Kristian Damkier, P.E.
Sacramento Metropolitan AQMD
777 12th St, 3rd Floor
Sacramento, CA 95814-1908

#	VIN	License Plate	Vehicle Information			Engine Information				Annual Usage (miles)	Received Funding
			Make	Model	Year	Make	Model	Year	HP		
(ex)	*1XP5AAC35RG339402*	*1T45678*	*Kenworth*	*T-300*	*2002*	*Cummins*	*ISB*	*2002*	*250*	*35,000*	*No*

Voluntary Green Contracting Fleet Inventory List (On-Road Equipment)

In partnership with the City of Sacramento and the Sacramento Metropolitan Air Quality Management District

Company Name:	
Contact Name:	
Company Address:	
City, State, ZIP:	
Company Phone:	

	City Bid Information
Department	
Project #	
ESBE/SBE?	

Instructions:

a) Please enter the vehicle / equipment information for each unit used in conjunction with your City of Sacramento Bid.
b) All fields are required for both on-road heavy-duty vehicles and off-road construction equipment over 50 HP.
c) Electronic version is available at http://www.airquality.org/ceqa/index.shtml
d) For additional questions, please call (916) 874-4892

Please Submit To:

Kristian Damkier, P.E.
Sacramento Metropolitan AQMD
777 12th St, 3rd Floor
Sacramento, CA 95814-1908

Equipment Serial Number	Equipment Information				Engine Information				Annual Usage (hours)
	Make	Model	Type	Year	Make	Model	Year	HP	
48W34456	*Caterpillar*	*631G*	*Scraper*	*2003*	*Caterpillar*	*3408E*	*2003*	*485*	*1,600*

LOCAL BUSINESS ENTERPRISE (LBE) PARTICIPATION REQUIREMENTS FOR PUBLIC PROJECTS OF $100,000 OR MORE

(City Contracts no Federal Funds Used)

I. LBE PARTICIPATION REQUIREMENT

On April 3, 2012, the Sacramento City Council adopted a Local Business Enterprise (LBE) Preference Program to provide enhanced opportunities for the participation of local business enterprises (LBEs) in the City's contracting and procurement activities. On November 19, 2013, the City Council increased the LBE preference percentage and authorized City departments to require minimum LBE participation levels in specific contracts. Under City Code section 3.60.270, when the bid specifications for a City contract establish a minimum participation level for LBEs, no bidder on the contract shall be considered responsive unless its bid meets the minimum LBE participation level required by the bid specifications.

The City has established **a minimum 5% participation level for LBEs on this contract**. Pursuant to City Code Section 3.60.270, no bidder on this contract shall be considered responsive unless its bid meets or exceeds this minimum participation level.

Bidder and any other business entity listed on the LBE forms submitted shall comply with all applicable laws relating to licensing, permitting, and payment of taxes and fees in the City of Sacramento or County of Sacramento; and shall not be in arrears to the City of Sacramento or County of Sacramento, upon award of a contract.

II. LBE QUALIFICATION

A. A LBE designated in the bid must be qualified as a LBE prior to the time set for submission of bids.

B. Local Business Enterprise means a business enterprise, including but not limited to, a sole proprietorship, partnership, limited liability company, corporation, or other business entity that has a legitimate business presence in the City or unincorporated county of Sacramento. Proof of legitimate business presence in the City or unincorporated county of Sacramento shall include:

1. Having a current City of Sacramento Business Operation Tax or County of Sacramento Business License for at least twelve (12) consecutive months prior to submission of bid; and
2. Having either of the following types of offices or workspace operating legally within the City or unincorporated county of Sacramento for at least twelve (12) consecutive months prior to submission of bid:
    a. The LBE's principle business office or workspace; or
    b. The LBE's regional, branch or satellite office with at least one full time employee located in the City or unincorporated county of Sacramento.

C. A LBE must provide a physical address for the basis of location. This excludes P.O. Box addresses.

D. A LBE must provide a current copy of the City of Sacramento Business Operations Tax Certificate or County of Sacramento Business License.

III. DETERMINATION OF LBE PARTICIPATION LEVEL

A. LBE Participation: The percentage of LBE participation is determined based on the dollar value of the work to be performed or supplies to be furnished by certified LBEs designated in the bidder's Subcontractor and LBE Participation Verification Form, relative to the total dollar amount of the bid.

B. Participation Credit: To receive credit for participation:(1) a LBE subcontractor must be responsible for the execution of a distinct element of the work, must possess any license or certification required for the work, and must actually perform, manage, or supervise the work without subcontracting or otherwise shifting any portion of the work to another subcontractor; and (2) a LBE supplier must furnish materials, equipment, or supplies that the supplier sells as a recurring, although not necessarily primary, part of its business, and that are necessary for performance of the work.

C. Suppliers: Credit for a LBE supplier of materials, equipment, or supplies is counted as one hundred (100) percent of the amount paid to the supplier for the material, equipment, or supplies. To receive this credit, LBE suppliers must be listed on the bidder's Subcontractor and LBE Participation Verification Form.

D. Subcontractors (including truckers): To receive credit for a LBE subcontractor, the subcontractor must be listed on the bidder's Subcontractor and LBE Participation Verification Form.

- Truckers: Credit for a LBE trucker is counted as one hundred (100) percent of the amount paid to the trucker for trucking services, not including any amount paid to the trucker for the cost of any materials, equipment, or supplies being transported by the trucker.

IV. LBE REQUIREMENTS FOR CONTRACTOR

A. LBE Records: The Contractor shall maintain records of all subcontracts with verified LBE subcontractors and records of materials purchased from verified LBE suppliers for one (1) year after receiving final payment from the City. Such records shall show the name and business address of each LBE subcontractor or supplier and the total dollar amount actually paid each LBE subcontractor or supplier.

Not later than 30 days after completion of the work performed under the contract, a summary of these records shall be prepared, certified correct by the Contractor's authorized representative and furnished to the City. The Contractor shall provide such other information, records, reports, certifications or other documents as may

be required by City, to determine compliance with any provision of the LBE program or these specifications.

B. Performance of LBE Subcontractors and Suppliers: The LBEs listed by the Contractor shall perform the work and supply the materials, equipment, and supplies for which they are listed unless the Contractor has received prior written authorization from the City to perform the work with other forces or to obtain the material, equipment, or supplies from other sources. Reasons for requesting such authorization would include:

1. The listed LBE fails to execute a written contract based upon the general terms, conditions, plans, and specifications for the project.

2. The listed LBE becomes bankrupt or insolvent.

3. The listed LBE subcontractor fails to meet the bond requirements of the Contractor.

4. The work performed or the materials/equipment/supplies provided by the listed LBE are unsatisfactory or are not in accordance with the plans and specifications, or the listed LBE fails to perform its contractual obligations.

5. It would be in the best interest of the City.

C. Subcontractor Substitution: No substitution of a LBE subcontractor shall be made at any time without compliance with the Subletting and Subcontracting Fair Practices Act. If a LBE subcontractor is unable to perform successfully and is to be replaced, the Contractor shall make reasonable efforts to replace the original LBE subcontractor with another verified LBE subcontractor. The new LBE subcontractor must be verified at the time of substitution.

D. Reporting and Utilization Requirements and Sanctions: Failure to provide specific information, records, reports, certifications, or any other documents required for compliance with these specifications, or failure to utilize one or more LBEs in substantial compliance with the LBE utilization indicated in the Contractor's bid (unless otherwise authorized by City as provided herein, or when such failure results from changes to the work approved by the City), shall be considered a breach of the contract, and a deduction may be made from the contract amount. The deduction shall be not more than ten (10) percent of the value of the work or materials/equipment/supplies that the subject LBE(s) were listed to perform/provide in the Contractor's bid, and shall be deducted from any payment due to the Contractor. This is in addition to any deduction that may be made under any other provision of the contract, the Sacramento City Code, or State law.

E. Hearing and Review of Division Manager Decision: Prior to making a deduction pursuant to Section IV (D), above, the City shall provide written notice of the proposed deduction to the Contractor, and the Contractor may, not later than five (5) working days after receiving such notice, provide a written request to City for a hearing to contest the proposed deduction. Upon receipt of a timely written

request from the Contractor, the City shall schedule a hearing before the Division Manager (as defined in the City's Standard Specifications for Public Construction), and written notice of the date, time and location of the hearing shall be provided to the Contractor not less than five (5) working days prior to the date of the hearing. The hearing shall be conducted in the manner specified in Section 4-8 of the Standard Specifications, and the Division Manager shall prepare and forward to the Contractor a written decision as soon as practicable after the hearing. The Division Manager's decision shall be subject to review in accordance with the provisions of Section 4-9 of the Standard Specifications. Failure to request such review in compliance with the requirements set forth in Section 4-9 shall constitute acceptance of the Division Manager's decision by the Contractor.

The written notices and requests described above shall be provided by registered or certified mail (return receipt requested), by telecopy, by personal delivery, or by any other method that provides reliable evidence of the date of receipt. Written notice provided by telecopy shall be deemed received on the date that it is transmitted and transmission is confirmed by the transmitting machine. Written notice provided by personal delivery shall be deemed received on the date of delivery.

V. DEFINITIONS

A. Local Business Enterprise (LBE): A business enterprise, including but not limited to, a sole proprietorship, partnership, limited liability company, corporation, or any other business entity that has a legitimate business presence in the City of Sacramento or unincorporated county of Sacramento.

B. Contractor: The sole proprietorship, partnership, limited liability company, corporation, or any other business entity entering into a contract with the City of Sacramento.

C. Subcontractor: The sole proprietorship, partnership, limited liability company, corporation, or other business entity entering into a contract with the prime contractor to perform a portion of the work.

D. Supplier: The sole proprietorship, partnership, limited liability company, corporation, or other business entity to provide materials, equipment, or supplies necessary for performance of the work.

E. Proposal: Any response to a City solicitation for Proposals or Qualifications.

F. Bid: Any response to a City solicitation for bids.

FOLLOWING FORMS TO BE FILLED OUT AND SIGNED

ONLY

IF AWARDED CONTRACT

WORKER'S COMPENSATION INSURANCE CERTIFICATION

TO THE CITY OF SACRAMENTO:

The undersigned does hereby certify that he is aware of the provisions of Section 3700 et seq. of the Labor Code which require every employer to be insured against liability for worker's compensation claims or to undertake self-insurance in accordance with the provisions of said Code, and that he/she will comply with such provisions before commencing the performance of the work on this contract.

_____
Bidder

BY: _____

Title: _____

Address: _____

_____

Date: _____

PLEASE READ CAREFULLY BEFORE SIGNING

To be signed by authorized corporate officer or partner or individual submitting the bid. If bidder is: (example)

1. An individual using a firm name, sign: "John Doe, and individual doing business as Blank Company".

2. An individual doing business under his own name, sign: Your name only.

3. A co-partnership, sign: "John Doe and Richard Doe, co-partners doing business as Blank Company, by, John Doe, Co-Partner".

4. A corporation, sign: "Blank Company, by John Doe, Secretary". (Or other title)

AGREEMENT
(Construction Contract Over $25,000)

THIS AGREEMENT, dated for identification _____, 20__, is made and entered into between the CITY OF SACRAMENTO, a municipal corporation ("City"), and _____ ("Contractor").

The City and Contractor hereby mutually agree as follows:

1. CONTRACT DOCUMENTS

The Contract Documents, sometimes also referred to as the "Contract," consist of the following items, which are hereby incorporated by reference as if set forth in full in this Agreement:

The Notice to Contractors
The Proposal Form submitted by the Contractor
The Instructions to Bidders
The Local Business Enterprise (LBE) Requirements
The Requirements for the Non-Discrimination in Employee Benefits by City Contractors Ordinance and the Declaration of Compliance
The City's Reference Guide for Construction Contracts
The Addenda, if any
This Agreement
The Standard Specifications
The Special Provisions
The Plans and Technical Specifications
The drawings and other data and all developments thereof prepared by City pursuant to the Contract
Any modifications of any of the foregoing made or approved by City, including but not limited to duly authorized change orders.

Unless specifically noted otherwise, references to the "Standard Specifications" shall mean and refer to the Standard Specifications for Public Construction of the City of Sacramento approved by the Sacramento City Council on June 4, 2007 (Resolution No. 2007-350), and any subsequent amendments thereto approved by the Sacramento City Council or the Sacramento City Manager. Work called for in any one Contract Document and not mentioned in another is to be performed and executed as if mentioned in all Contract Documents. The table of contents, titles and headings contained in the Contract Documents are provided solely to facilitate reference to various provisions of the Contract Documents and in no way affect or limit the interpretation of the provisions to which they refer.

2. DEFINITIONS

Unless otherwise specifically provided herein, all words and phrases defined in the Standard Specifications shall have the same meaning and intent in this Agreement.

3. AGREEMENT CONTROLS

In the event of a conflict between any of the terms and conditions set forth in this Agreement and the terms and conditions set forth in other Contract Documents, the terms and conditions set forth in this Agreement shall prevail, except that the provisions of any duly authorized change order shall prevail over any conflicting provisions of this Agreement.

4. SCOPE OF CONTRACT

Contractor agrees to furnish all tools, equipment, apparatus, facilities, labor, material and transportation necessary to perform and complete in a good and workmanlike manner to the satisfaction of City, all the Work called for in the Contract Documents entitled:

GROUNDWATER WELL REHABILITATION PH 3
(PN: Z14110105)

including the Work called for in the following alternative bid items described in the Proposal Form:
_____

Contractor agrees to perform such Work in the manner designated in and in strict conformity with the Contract Documents.

5. CONTRACT AMOUNT AND PAYMENTS

City agrees to pay and Contractor agrees to accept, as complete payment for the above Work, in accordance with the schedule and procedures set forth in the Contract Documents and subject to deductions, withholdings and additions as specified in the Contract Documents, a total sum that shall not exceed the total bid amount set forth in Contractor's Proposal Form. In addition, subject to deductions, withholdings and additions as specified in the Contract Documents, payment for individual items of the Work shall be computed as follows:

(A) For items of the Work for which a lump sum price is specified in Contractor's Proposal Form, Contractor shall be paid the lump sum price(s) specified in Contractor's Proposal Form; and

(B) For items of the Work for which a unit price is specified in Contractor's Proposal Form, Contractor shall be paid the sum computed at such unit price, or computed at a different price if such different price is determined by City in accordance with the Standard Specifications, based on the actual amount of each such item performed and/or furnished and incorporated in the Work; provided that in no event shall the total sum for a unit price item exceed the total bid amount set forth for such item in the Contractor's Proposal Form, unless authorized by Change Order.

6. PROGRESS PAYMENTS

Subject to the terms and conditions of the Contract, City shall cause payments to be made upon demand of Contractor as follows:

(A) On or about the first of the month, the Engineer shall present to the Contractor a statement showing the amount of labor and materials incorporated in the Work through the twentieth (20) calendar day of the preceding month. After both Contractor and Engineer approve the statement in writing, and the City's labor compliance officer provides written approval, the City shall issue a certificate for ninety-five (95) percent of the amount it shall find to be due, subject to any deductions or withholdings authorized or required under the Contract or any applicable Laws or Regulations.

(B) No inaccuracy or error in said monthly estimates shall operate to release Contractor from damages arising from such Work or from enforcement of each and every provision of the Contract Documents, and City shall have the right subsequently to correct any error made in any estimate for payment.

(C) Contractor shall not be paid for any defective or improper Work.

(D) The remaining five (5) percent of the value of the Work performed under the Contract, if unencumbered and subject to any deductions or withholdings authorized or required under the Contract or any applicable Laws or Regulations, shall be released not later than sixty (60) days after completion and final acceptance of the Work by City. Acceptance by Contractor of the final payment shall constitute a waiver of all claims against the City arising under the Contract

Documents, except for disputed claims in stated amounts that the Contractor specifically reserves in writing, but only to the extent that the Contractor has complied with all procedures and requirements applicable to the presentation and processing of such claim(s) under the Contract Documents. Contractor shall be entitled to substitute securities for retention or to direct that payments of retention be made into escrow, as provided in Public Contract Code Section 22300, upon execution of the City's Escrow Agreement for Security Deposits in Lieu of Retention.

(E) The parties agree that, for purposes of the timely progress payment requirements specified in Public Contract Code Section 20104.50, the date that the City receives a statement jointly approved by the Contractor and the Engineer as provided above shall be deemed to constitute the date that City receives an undisputed and properly submitted payment request from the Contractor. Progress payments not made within 30 days after this date may be subject to payment of interest as provided in Public Contract Code Section 20104.50.

7. RETENTION OF SUMS CHARGED AGAINST CONTRACTOR

When, under the provisions of this Contract or any applicable Laws or Regulations, City is authorized or required to withhold, deduct or charge any sum of money against Contractor, City may deduct and retain the amount of such charge from the amount of the next succeeding progress estimate(s), or from any other moneys due or that may become due Contractor from City. If, on completion or termination of the Contract, sums due Contractor are insufficient to pay City's charges, City shall have the right to recover the balance from Contractor or its Sureties.

8. COMMENCEMENT AND PROSECUTION OF WORK

Contractor shall commence the Work not later than fifteen (15) working days after the date of the written Notice to Proceed from City to Contractor and shall diligently prosecute the Work to final completion. The phase "commence the Work" means to engage in a continuous program on-site including, but not limited to, site clearance, grading, dredging, land filling and the fabrications, erection, or installation of the Work. The Notice to Proceed shall be issued within fifteen (15) calendar days following execution of the Agreement by the City and the filing by Contractor of the required Bonds and proof of insurance, provided that the Engineer may delay issuance of the Notice to Proceed if the Engineer determines in the Engineer's sole discretion that conditions on the site of the Work are unsuitable for commencement of the Work. After the Notice to Proceed is issued, the continuous prosecution of Work by Contractor shall be subject only to Excusable Delays as defined in this Agreement.

9. TIME OF COMPLETION

The entire Work shall be brought to completion in the manner provided for in the Contract Documents on or before **210 working days** from the date of the Notice to Proceed (hereinafter called the "Completion Date") unless extensions of time are granted in accordance with the Contract Documents.

Failure to complete the entire Work by the Completion Date and in the manner provided for in the Contract Documents shall subject Contractor to liquidated damages as provided in this Agreement. Time is and shall be of the essence in the performance of the Contract and the Work.

10. PAYMENTS DO NOT IMPLY ACCEPTANCE OF WORK

The payment of any progress payment, or the acceptance thereof by Contractor, shall not constitute acceptance of the Work or any portion thereof and shall in no way reduce the liability of Contractor to replace unsatisfactory work or material, whether or not the unsatisfactory character of such work or material was apparent or detected at the time such payment was made.

11. ACCEPTANCE NOT RELEASE

Contractor shall correct immediately any defective or imperfect work or materials that may be discovered before final acceptance of the entire Work, whether or not such defect or imperfection was previously noticed or identified by the City. The inspection of the Work, or any part thereof, shall not relieve Contractor of any of its obligations to perform satisfactory work as herein specified.

Failure or neglect on the part of City or any of its officers, employees or authorized agents to discover, identify, condemn or reject defective or imperfect work or materials shall not be construed to imply an acceptance of such work or materials, if such defect or imperfection becomes evident at any time prior to final acceptance of the entire Work, nor shall such failure or neglect be construed as barring City from enforcing Contractor's warranty(ies) or otherwise recovering damages or such a sum of money as may be required to repair or rebuild the defective or imperfect work or materials whenever City may discover the same, subject only to any statutes of limitation that may apply to any such claim.

12. CITY'S RIGHT TO TAKE POSSESSION OF THE WORK IN WHOLE OR IN PART

The City shall have the right at any time to enter upon the Work and perform work not covered by this Contract, or to occupy and use a portion of the Work, prior to the date of the final acceptance of the Work as a whole, without in any way relieving Contractor of any obligations under this Contract.

13. NO WAIVER OF REMEDIES

Neither the inspection by City, its officers, employees or agents, nor any certificate or other approval for the payment of money, nor any payment for, nor acceptance of the whole or any part of the Work by City, nor any extensions of time, nor any position taken by City, its officers, employees or its agents shall operate as a waiver of any provision of the Contract Documents nor of any power herein reserved to City or any right to damages herein provided, nor shall any waiver of any breach of this Agreement be held to be a waiver of any other or subsequent breach. All remedies provided in the Contract Documents shall be taken and construed as cumulative; in addition to each and every other remedy herein provided, the City shall have any and all equitable and legal remedies that it would in any case have.

14. WARRANTY

Except as otherwise expressly provided in the Contract Documents, and excepting only items of routine maintenance, ordinary wear and tear and unusual abuse or neglect by City, Contractor warrants and guarantees all Work executed and all supplies, materials and devices of whatsoever nature incorporated in or attached to the Work, or otherwise provided as a part of the Work pursuant to the Contract, to be absolutely free of all defects of workmanship and materials for a period of one year after final acceptance of the entire Work by the City. Contractor shall repair or replace all work or material, together with any other work or material that may be displaced or damaged in so doing, that may prove defective in workmanship or material within this one year warranty period without expense or charge of any nature whatsoever to City.

In the event that Contractor shall fail to comply with the conditions of the foregoing warranty within ten (10) days after being notified of the defect in writing, City shall have the right, but shall not be obligated, to repair, or obtain the repair of, the defect and Contractor shall pay to City on demand all costs and expense of such repair. Notwithstanding anything herein to the contrary, in the event that any defect in workmanship or material covered by the foregoing warranty results in a condition that constitutes an immediate hazard to public health or safety, or any property interest, or any person, City shall have the right to immediately repair, or cause to be repaired, such defect, and Contractor shall pay to City on demand all costs and expense of such repair. The foregoing statement relating to hazards to health, safety or property shall be deemed to include both temporary and permanent repairs that may be required as determined in the sole discretion and judgment of City.

In addition to the above, the Contractor shall make a written assignment of all manufacturer's and other product warranties to the City, prior to completion and final acceptance of the Work by City.

The Contractor's Performance Bond shall secure the performance of the Contractor's obligations under this Section 14, and the Contractor and its Surety shall be jointly and severally liable for these obligations.

15. LIQUIDATED DAMAGES IF WORK NOT COMPLETED ON TIME

(A) The actual fact of the occurrence of damages and the actual amount of the damages that City would suffer if the entire Work, and/or any specified portion thereof, were not completed within the time(s) specified herein are dependent upon many circumstances and conditions that could prevail in various combinations, and for this reason, it is impracticable and extremely difficult to fix the actual damages. Damages that City would suffer in the event of such delay include: loss of the use of the project; expenses of prolonged assignment to the project of an architectural and/or engineering staff; prolonged costs of administration, inspection, and supervision; increased operational expenses and/or impaired operation of other facilities dependent upon completion of the project; and the loss and inconvenience suffered by the public within the City of Sacramento by reason of the delay in the completion of the project or portion thereof. Accordingly, the parties agree, and by execution of this Agreement, Contractor acknowledges that it understands and agrees, that the amount(s) set forth herein as liquidated damages reflect the parties' best efforts at the time of entering into the Contract to estimate the damages that may be incurred by City and the public due to the Contractor's delay in completion of the Work and/or any specified portion thereof, and shall be presumed to be the amount of damages sustained by the failure of Contractor to complete the entire Work and/or any specified portion thereof within the time(s) specified herein.

(B) Contractor shall pay liquidated damages to City for failure to complete the entire Work by the Completion Date (as extended in accordance with the Contract Documents, if applicable) in the amount of **(One thousand dollars ($1,000)) for each calendar day** for each calendar day after the Completion Date (as extended in accordance with the Contract Documents, if applicable), continuing to the time at which the entire Work is completed. Such amount is the actual cash value agreed upon by the City and Contractor as the loss to City and the public resulting from Contractor's default.

The parties agree, and by execution of this Agreement, Contractor acknowledges that it understands and agrees, that the foregoing provisions provide for the imposition of liquidated damages from the Completion Date (as extended in accordance with the Contract Documents, if applicable) until the date of completion of the entire Work as determined by the Engineer in accordance with Section 8-4 of the Standard Specifications, whether or not the Work or any portion thereof is claimed or determined to be substantially complete prior to such date of completion.

(C) In the event Contractor shall become liable for liquidated damages, City, in addition to all other remedies provided by law, shall have the right to withhold any and all payments that otherwise would be or become due Contractor until the liability of Contractor under this section is finally determined. City shall have the right to use and apply such payments, in whole or in part, to reimburse City for all liquidated damages due or to become due to City. Any remaining balance of such payments shall be paid to Contractor only after discharge in full of all liability incurred by Contractor under this section or otherwise under any provision of the Contract Documents or any applicable Law or Regulation. If the sum so retained by City is not sufficient to discharge all such liabilities of Contractor, Contractor shall continue to remain liable to City until all such liabilities are satisfied in full. No failure by City to withhold any payment as specified above shall in any manner be construed to constitute a release of any such liabilities nor a waiver of the City's right to withhold payment for such liabilities.

16. INDEMNITY AND HOLD HARMLESS

(A) Contractor shall defend, hold harmless and indemnify the City, its officers, employees, and

agents, and each and every one of them, from and against any and all actions, damages, costs, liabilities, claims, demands, losses, judgments, penalties, costs and expenses of every type and description, whether arising on or off the site of the Work, including, but not limited to, any fees and/or costs reasonably incurred by City's staff attorneys or outside attorneys and any fees and expenses incurred in enforcing this provision (hereafter collectively referred to as "Liabilities"), including but not limited to Liabilities arising from personal injury or death, damage to personal, real or intellectual property or the environment, contractual or other economic damages, or regulatory penalties, arising out of or in any way connected with performance of or failure to perform the Work by the Contractor, any subcontractor or agent, anyone directly or indirectly employed by any of them or anyone for whose acts any of them may be liable, whether or not (i) such Liabilities are caused in part by a party indemnified hereunder, or (ii) such Liabilities are litigated, settled or reduced to judgment; provided that the foregoing indemnity does not apply to liability for damages for death or bodily injury to persons, injury to property, or other loss, damage or expense to the extent arising from (i) the sole negligence or willful misconduct of, or defects in design furnished by, City, its agents, servants, or independent contractors who are directly responsible to City, or (ii) the active negligence of City.

(B) The existence or acceptance by City of any of the insurance policies or coverages described in this Agreement shall not affect or limit any of City's rights under this Section 16, nor shall the limits of such insurance limit the liability of Contractor hereunder. The provisions of this Section 16 shall survive any expiration or termination of the Contract.

17. CONTRACTOR SHALL ASSUME RISKS

Until the completion and final acceptance by City of all Work under this Contract, the Work shall be under Contractor's responsible care and charge, and Contractor, at no cost to City, shall rebuild, repair, restore and make good all injuries, damages, re-erections, and repairs occasioned or rendered necessary by accidental causes of any nature, to all or any portions of the Work.

18. GENERAL LIABILITY OF CONTRACTOR

Except as otherwise herein expressly stipulated, Contractor shall perform all the Work and furnish all the labor, materials, tools, equipment, apparatus, facilities, transportation, power and light, and appliances, necessary or proper for performing and completing the Work herein required in the manner and within the time herein specified. The mention of any specific duty or liability of Contractor shall not be construed as a limitation or restriction of any general liability or duty of Contractor, and any reference to any specific duty or liability shall be construed to be solely for the purpose of explanation.

19. INSURANCE

During the entire term of this Contract and until completion and final acceptance of the Work as provided in the Contract Documents, Contractor shall maintain in full force and effect the insurance coverage described in this section.

Full compensation for all premiums that Contractor is required to pay for the insurance coverage described herein shall be included in the compensation specified for performance of the Work under the Contract. No additional compensation will be provided for Contractor's insurance premiums.

It is understood and agreed by the Contractor that its liability to the City shall not in any way be limited to or affected by the amount of insurance coverage required of or carried by the Contractor.

(A) <u>Minimum Scope and Limits of Insurance Coverage</u>

(1) <u>Commercial General Liability Insurance,</u> providing coverage at least as broad as ISO

CGL Form 00 01 on an occurrence basis for bodily injury, including death, of one or more persons, property damage and personal injury, with limits of not less than one million dollars ($1,000,000) per occurrence. The policy shall provide contractual liability and products and completed operations coverage for the term of the policy.

(2) Automobile Liability Insurance providing coverage at least as broad as ISO Form CA 00 01 on an occurrence basis for bodily injury, including death, of one or more persons, property damage and personal injury, with limits of not less than one million dollars ($1,000,000) per occurrence. The policy shall provide coverage for owned, non-owned and/or hired autos as appropriate to the operations of the Contractor.

(3) Workers' Compensation Insurance with statutory limits, and Employers' Liability Insurance with limits of not less than one million dollars ($1,000,000). The Worker's Compensation policy shall include a waiver of subrogation.

(B) Additional Insured Coverage

(1) Commercial General Liability Insurance: The City, its officials, employees and volunteers shall be covered by policy terms or endorsement as additional insureds as respects general liability arising out of activities performed by or on behalf of Contractor, products and completed operations of Contractor, and premises owned, leased or used by Contractor. The general liability additional insured endorsement must be signed by an authorized representative of the insurance carrier.

If the policy includes a blanket additional insured endorsement or contractual additional insured coverage, the above signature requirement may be fulfilled by submitting that document with a signed declaration page referencing the blanket endorsement or policy form.

(2) Automobile Liability Insurance: The City, its officials, employees and volunteers shall be covered by policy terms or endorsement as additional insureds as respects auto liability.

(C) Other Insurance Provisions

The policies are to contain, or be endorsed to contain, the following provisions:

(1) Contractor's insurance coverage shall be primary insurance as respects City, its officials, employees and volunteers. Any insurance or self-insurance maintained by City, its officials, employees or volunteers shall be in excess of Contractor's insurance and shall not contribute with it.

(2) Any failure to comply with reporting provisions of the policies shall not affect coverage provided to City, its officials, employees or volunteers.

(3) Coverage shall state that Contractor's insurance shall apply separately to each insured against whom claim is made or suit is brought, except with respect to the limits of the insurer's liability.

(4) City will be provided with thirty (30) days written notice of cancellation or material change in the policy language or terms.

(D) Acceptability of Insurance

Insurance shall be placed with insurers with a Bests' rating of not less than A:V. Self-insured

retentions, policy terms or other variations that do not comply with the requirements of this Section 19 must be declared to and approved by the City Risk Management Division in writing prior to execution of this Agreement.

(E) Verification of Coverage

(1) Contractor shall furnish City with certificates and required endorsements evidencing the insurance required. The certificates and endorsements shall be forwarded to the City representative designated by City. Copies of policies shall be delivered to the City on demand. Certificates of insurance shall be signed by an authorized representative of the insurance carrier.

(2) The City may withdraw its offer of contract or cancel the Contract if the certificates of insurance and endorsements required have not been provided prior to execution of this Agreement. The City may withhold payments to Contractor and/or cancel the Contract if the insurance is canceled or Contractor otherwise ceases to be insured as required herein.

(F) Subcontractors

Contractor shall require and verify that all subcontractors maintain insurance coverage that meets the minimum scope and limits of insurance coverage specified in subsection A, above.

20. FAILURE TO MAINTAIN BONDS OR INSURANCE

If, at any time during the performance of this Contract, Contractor fails to maintain any item of the bonds and/or insurance required under the Contract in full force and effect, Contractor shall immediately suspend all work under the Contract and notify City in writing of such failure. After such notice is provided, or if City discovers such failure and notifies Contractor, the City thereafter may withhold all Contract payments due or that become due until notice is received by City that such bonds and/or insurance have been restored in full force and effect and that the premiums therefor have been paid for a period satisfactory to the Division of Risk Management. Contractor shall not resume work until notified by City to do so, and the City shall have no responsibility or liability for any costs incurred by Contractor as a result of such suspension of Work.

In addition to the foregoing, any failure to maintain any item of the required bonds and/or insurance at any time during the performance of this Contract will be sufficient cause for termination of the Contract by City.

The Contractor shall be solely responsible for, and shall defend, indemnify and hold harmless the City, its officers, employees and agents against and from, any and all damages, claims, losses, actions, costs or other expenses of any kind incurred by any party as a direct or indirect result of any suspension of Work or termination of the Contract under the provisions of this Section.

21. EXCUSABLE DELAYS

For the purpose of these Contract Documents, the term "Excusable Delay" shall mean, and is limited to, delay caused directly by: acts of God; acts of a public enemy; fires; inclement weather as determined by the Engineer; riots; insurrections; epidemics; quarantine restrictions; strikes; lockouts; sitdowns; acts of a governmental agency; priorities or privileges established for the manufacture, assemble, or allotment of materials necessary in the Work by order, decree or otherwise of the United States or by any department, bureau, commission, committee, agent, or administrator of any legally constituted public authority; changes in the Work ordered by City insofar as they necessarily require additional time in which to complete the Work; the prevention of Contractor from commencing or prosecuting the Work because of the acts of others, excepting Contractor's subcontractors or suppliers;

or the prevention of Contractor from commencing or prosecuting the Work because of a Citywide failure of public utility service.

The term "Excusable Delay" shall specifically not include: (i) any delay that could have been avoided by the exercise of care, prudence, foresight and diligence on the part of Contractor; (ii) any delay in the prosecution of any part of the Work that does not constitute a Controlling Operation, whether or not such delay is unavoidable; (iii) any reasonable delay resulting from time required by City for review of any Contractor submittals and for the making of surveys, measurements and inspection; and, (iv) any delay arising from an interruption in the prosecution of the Work on account of reasonable interference by other Contractors employed by City that does not necessarily prevent the completion of the entire Work within the time specified. Excusable Delays, if any, shall operate only to extend the Completion Date (not in excess of the period of such delay as determined by City) and shall not under any circumstances increase the amount City is required to pay Contractor except as otherwise provided in these Contract Documents.

22. CONTRACTOR TO SERVE NOTICE OF DELAYS

Whenever Contractor foresees any delay in the prosecution of the Work, and in any event as soon as possible (not to exceed a period of ten (10) calendar days) after the initial occurrence of any delay that Contractor regards as or may later claim to be an Excusable Delay, the Contractor shall notify the Engineer in writing of such delay and its cause, in order that the Engineer: (i) may take immediate steps to prevent if possible the occurrence or continuance of the delay; or (ii) if this cannot be done, may determine whether the delay is to be considered excusable, how long it continues, and to what extent the prosecution and completion of the Work are delayed thereby. Said written notice shall constitute an application for an extension of time only if the notice requests such an extension and sets forth the Contractor's estimate of the additional time required together with a full description of the cause of the delay relied upon.

After the completion of any part or whole of the Work, the Engineer, in estimating the amount due Contractor, will assume that any and all delays that may have occurred in its prosecution and completion were not Excusable Delays, except for such delays for which the Contractor has provided timely written notice as required herein, and that the Engineer has found to be excusable. Contractor shall not be entitled to claim Excusable Delay for any delay for which the Contractor failed to provide such timely written notice.

23. EXTENSION OF TIME

If the Contractor complies with Section 22, above, and the Engineer finds a delay claimed by the Contractor to be an Excusable Delay, the Contractor shall be allowed an extension of time to complete the Work that is proportional to the period of Excusable Delay determined by the Engineer, subject to the approval by City of a change order granting such time extension. During a duly authorized extension for an Excusable Delay, City shall not charge liquidated damages against the Contractor for such delay.

If the City extends the time to complete the Work as provided herein, such extension shall in no way release any warranty or guarantee given by Contractor pursuant to the provisions of the Contract Documents, nor shall such extension of time relieve or release the sureties of the Bonds provided pursuant to the Contract Documents. By executing such Bonds, the Sureties shall be deemed to have expressly agreed to any such extension of time. The granting of any extension of time as provided herein shall in no way operate as a waiver on the part of City of its rights under this Contract, excepting only extension of the Completion Date for such period of Excusable Delay as may be determined by the Engineer and approved by a duly authorized change order.

24. NO PAYMENT FOR DELAYS

No damages or compensation of any kind shall be paid to Contractor or any subcontractor because of delays in the progress of the Work whether or not such delays qualify for extension of time under this Agreement; except that this provision shall not preclude the recovery of damages for a delay caused by the City that is unreasonable under the circumstances and that is not within the contemplation of the parties, provided that the Contractor timely submits all such written notice(s) and fully complies with such other procedures as may be specified in the Contract Documents or any Laws or Regulations for Contractor to claim damages for such delay.

25. CHANGES IN THE WORK

Changes in the Work authorized or directed in accordance with the Contract Documents and extensions of time of completion made necessary by reason thereof shall not in any way release any warranty or guarantee given by Contractor pursuant to the provisions of the Contract Documents, nor shall such changes in the Work relieve or release the Sureties on Bonds provided pursuant to the Contract Documents. By executing such Bonds, the Sureties shall be deemed to have expressly agreed to any such change in Work and to any extension of time made by reason thereof.

26. TERMINATION AFTER COMPLETION DATE

In addition to any other rights City may have, if any services or work required under the Contract (including but not limited to punch list items) are not completed as of the Completion Date (as adjusted by any extensions of time for Excusable Delays granted pursuant to the Contract Documents), City may terminate the Contract at any time after the Completion Date (as adjusted by any extensions of time for Excusable Delays granted pursuant to the Contract Documents), by providing a written notice to Contractor specifying the date of termination. Such notice also may specify conditions or requirements that Contractor must meet to avoid termination of the Contract on such date. If Contractor fails to fulfill all such conditions and requirements by such termination date, or, if no such conditions or requirements are specified, Contractor shall cease rendering services and performing work on such termination date, and shall not be entitled to receive any compensation for services rendered or work performed after such termination date. In the event of such termination, Contractor shall remain liable to City for liquidated damages incurred for any period of time prior to the termination date.

In addition to any other charges, withholdings or deductions authorized under the Contract or any Laws or Regulations, if City terminates the Contract pursuant to this section, City may withhold and deduct from any payment and/or retention funds otherwise due Contractor any sum necessary to pay the City's cost of completing or correcting, or contracting for the completion or correction of, any services or work under the Contract that are not completed to the satisfaction of the City or that otherwise are deficient or require correction as of such termination date, including but not limited to incomplete punch list items. Such costs shall include all of the City's direct and indirect costs incurred to complete or correct such services or work, including the City's administrative and overhead costs. If the amount of payment(s) and/or retention funds otherwise due the Contractor are insufficient to pay such costs, City shall have the right to recover the balance of such costs from the Contractor and/or its Surety(ies).

27. TERMINATION FOR CONVENIENCE

Upon written notice to the Contractor, the City may at any time, without cause and without prejudice to any other right or remedy of the City, elect to terminate the Contract for the convenience of City. In such case, the Contractor shall be paid (without duplication of any items, and after deduction and/or withholding of any amounts authorized to be deducted or withheld by the Contract Documents or any Laws or Regulations):

(A) For Work executed in accordance with the Contract Documents prior to the effective date of termination and determined to be acceptable by the Engineer, including fair and reasonable sums for overhead and profit on such Work;

(B) For reasonable claims, costs, losses, and damages incurred in settlement of terminated contracts with subcontractors, suppliers, and others; and

(C) For reasonable expenses directly attributable to termination.

Contractor shall not be paid for any loss of anticipated profits or revenue for any Work not performed prior to termination, nor for any economic loss arising out of or resulting from such termination, except for the payments listed in this section. Contractor's warranty under Section 14 of this Agreement shall apply, and Contractor shall remain responsible for all obligations related to such warranty, with respect to all portions of the Work performed prior to the effective date of the termination for convenience pursuant to this section. The City shall be entitled to have any or all remaining Work performed by other contractors or by any other means at any time after the effective date of a termination for convenience pursuant to this section.

28. TERMINATION FOR BREACH OF CONTRACT

If Contractor abandons the Work under this Contract, or if the Contract or any portion of the Contract is sublet or assigned without the consent of the City, or if the Engineer determines in the Engineer's sole discretion that the conditions of the Contract in respect to the rate of progress of the Work are not being fulfilled or any part thereof is unnecessarily delayed, or if Contractor violates or breaches, or fails to execute in good faith, any of the terms or conditions of the Contract, or if Contractor refuses or fails to supply enough properly skilled labor or materials or refuses or fails to make prompt payment to subcontractors for material or labor, or if Contractor disregards any Laws or Regulations or proper instruction or orders of the Engineer, then, notwithstanding any provision to the contrary herein, the City may give Contractor and its Sureties written notification to immediately correct the situation or the Contract shall be terminated.

In the event that such notice is given, and, in the event such situation is not corrected, or arrangements for correction satisfactory to the City are not made, within ten (10) calendar days from the date of such notice or within such other period of time as may be specified by the City in the notice, the Contract shall upon the expiration of said period cease and terminate. In the event of any such termination, City may take over the Work and prosecute the Work to completion, or otherwise, and the Contractor and its Sureties shall be liable to City for any cost occasioned City thereby, as hereinafter set forth.

In the event City completes the Work, or causes the Work to be completed, no payment of any kind shall be made to Contractor until the Work is complete. The cost of completing the Work, including but not limited to, extra costs of project administration and management incurred by City, both direct or indirect, shall be deducted from any sum then due, or that becomes due, to Contractor from City. If sums due to Contractor from City are less than the cost of completing the Work, Contractor and its Sureties shall pay City a sum equal to this difference on demand. In the event City completes the Work, and there is a sum remaining due to Contractor after City deducts the costs of completing the Work, then City shall pay such sum to Contractor. The Contractor and Contractor's Sureties shall be jointly and severally liable for all obligations imposed on Contractor hereunder.

No act by City before the Work is finally accepted, including, but not limited to, exercise of other rights under the Contract, actions at law or in equity, extensions of time, payments, assessments of liquidated damages, occupation or acceptance of any part of the Work, waiver of any prior breach of the Contract or failure to take action pursuant to this section upon the happening of any prior default or breach of Contractor, shall be construed to be a waiver or estoppel of the City's right to act pursuant to this Section upon any subsequent event, occurrence or failure by Contractor to fulfill the terms and conditions of the Contract. The rights of City to terminate the Contract pursuant to this Section and pursuant to Sections 26 and 27 are cumulative and are in addition to all other rights of City pursuant to the Contract and at law or in equity.

29. CONTRACTOR BANKRUPT

If Contractor should commence any bankruptcy proceeding, or if Contractor is adjudged a bankrupt, or if Contractor makes any assignment for the benefit of creditors, or if a receiver is appointed on account of Contractor's insolvency, then the City may, without prejudice to any other right or remedy, terminate the Contract and complete the work by giving notice as provided in Section 28 above.

30. SURETIES' OBLIGATIONS UPON TERMINATION

If the City terminates the Contract pursuant to Section 28 or Section 29 above:

(A) The Surety under Contractor's performance bond shall be fully responsible for all of the Contractor's remaining obligations of performance under the Contract as if the Surety were a party to the Contract, including without limitation Contractor's obligations, as provided in the Contract Documents, to complete and provide a one-year warranty of the entire Work, pay liquidated damages and indemnify, defend and hold harmless City, up to the full amount of the performance bond.

(B) The Surety under Contractor's payment bond shall be fully responsible for the performance of all of the Contractor's remaining payment obligations for work, services, equipment or materials performed or provided in connection with the Work or any portion thereof, up to the full amount of the payment bond.

31. ACCOUNTING RECORDS OF CONTRACTOR

During performance of the Contract and for a period of three (3) years after completing the entire Work, Contractor shall maintain all accounting and financial records related to the Contract and performance of the Work in accordance with generally accepted accounting practices, and shall keep and make such records available for inspection and audit by representatives of the City upon reasonable written notice.

32. USE TAX REQUIREMENTS

During the performance of this Agreement, CONTRACTOR, for itself, its assignees and successors in interest, agrees as follows:

(A) Use Tax Direct Payment Permit: For all leases and purchases of materials, equipment, supplies, or other tangible personal property used to perform the Agreement and shipped from outside California, the Contractor and any subcontractors leasing or purchasing such materials, equipment, supplies or other tangible personal property shall obtain a Use Tax Direct Payment Permit from the California State Board of Equalization ("SBE") in accordance with the applicable SBE criteria and requirements.

(B) Sellers Permit: For any construction contract and any construction subcontract in the amount of $5,000,000 or more, Contractor and the subcontractor(s) shall obtain sellers permits from the SBE and shall register the jobsite as the place of business for the purpose of allocating local sales and use tax to the City. Contractor and its subcontractors shall remit the self-accrued use tax to the SBE, and shall provide a copy of each remittance to the City.

(C) The above provisions shall apply in all instances unless prohibited by the funding source for the Agreement.

IN WITNESS WHEREOF, the parties hereto have signed this Agreement on the date set for opposite their names.

CONTRACTOR

Under penalty of perjury, I certify that the taxpayer identification number and all other information provided here are correct.

DATE _____

BY_____

_____
Print Name

_____
Title

BY_____

_____
Print Name

_____
Title

_____
Federal ID#

_____
State ID#

_____
City of Sacramento Business Operation Tax Certificate No. (City will not award contract until Certificate Number is obtained)

Type of Business Entity *(check one)*:
_____ Individual/Sole Proprietor
_____ Partnership
_____ Corporation
_____ Limited Liability Company
_____Other (*please specify:*_____)

CITY OF SACRAMENTO
a municipal corporation

DATE _____

BY _____

For: John F. Shirey,
City Manager – City of Sacramento

Original Approved As To Form:

_____
City Attorney

Attest:

_____
City Clerk

CITY OF SACRAMENTO **Bond #:_____**
PERFORMANCE BOND **Premium: _____**
Department of Utilities

WHEREAS, the City of Sacramento, in the State of California, hereinafter called City has conditionally awarded to (*here insert full name and address of Contractor)*:

as principal, hereinafter called Contractor, an agreement for construction of:

GROUNDWATER WELL REHABILITATION PH 3
(PN: Z14110105) (B15141321010)

in accordance with the plans, specifications, drawings, conditions, and project manual prepared therefore, which agreement is by reference made a part hereof, and is hereinafter referred to as the Contract; and

WHEREAS, under the terms of the Contract, Contractor is required to furnish a bond for the faithful performance of the Contract.

NOW, THEREFORE, we the Contractor and (*here insert full name and address of Surety*):

_____, a corporation duly authorized and admitted to transact business and issue surety bonds in the State of California, hereinafter called Surety, are held and firmly bound unto the City, as obligee, in the sum of _____DOLLARS $_____), for the payment of which sum well and truly to be made, we the Contractor and Surety bind ourselves, our heirs, executors, administrators, successors and assigns, jointly and severally. The condition of this obligation is such that, if the Contractor, Contractor's heirs, executors, administrators, successors, or assigns, shall in all things stand to and abide by, and well and truly keep and fully perform all covenants, conditions and agreements required to be kept and performed by Contractor in the Contract and any changes, additions or alterations made thereto, to be kept and performed at the time and in the manner therein specified, and in all respects according to their true intent and meanings, and shall indemnify and save harmless the City, its officers, employees and agents, as therein provided, then this obligation shall be null and void; otherwise shall be and remain in full force and effect. This obligation shall remain in full force and effect until (1) the date that the Contractor no longer has any remaining obligation of performance under the Contract, or (2) the date that is one year after the date that the work to be performed under the Contract is accepted as complete by the City, whichever occurs later.

As part of the obligation secured hereby and in addition to the sum specified above, there shall be included all costs, expenses and fees, including attorney's fees, reasonably incurred by City in successfully enforcing such obligation, all to be taxed as costs and included in any judgement rendered.

The Surety, for value received, hereby stipulates and agrees that no change, extension of time, alteration or addition to the terms of the Contract, or to the work to be performed thereunder, or to the specifications accompanying the same, shall in any way affect its obligations on this bond, and it does hereby waive notice of any such change, extension, alteration or addition.

IN WITNESS WHEREOF, this instrument has been duly executed by authorized representatives of the Contractor and Surety.
SIGNED AND SEALED on _____, 2014.

_____
(Contractor) (Seal)

By _____

Title _____

ORIGINAL APPROVED AS TO FORM:

_____
City Attorney

_____
(Surety) (Seal)

By _____

Title _____
Agent Name and Address _____

_____
Agent Phone # _____
Surety Phone # _____
California License # _____
Surety Email: _____

CITY OF SACRAMENTO
PAYMENT BOND
Department of Utilities

Bond No: _____
Premium: _____

WHEREAS, the City of Sacramento, in the State of California, hereinafter called City, has conditionally awarded to:

hereinafter called Contractor, a contract for construction of:

GROUNDWATER WELL REHABILITATION PH 3
(PN: Z14110105) (B15141321010)

Which contract is by reference incorporated herein and made a part hereof, and is hereinafter referred to as the Contract; and

WHEREAS, under the terms of the Contract and pursuant to Chapter 5 of Title 3 of Part 6 of Division 4 of the California Civil Code (commencing with Civil Code Section 9550), Contractor is required to furnish a good and sufficient payment bond to secure payment of the claims to which reference is made in Civil Code Section 9554.

NOW, THEREFORE, we the Contractor and (*here insert full name and address of Surety*):

_____ , a corporation a corporation duly authorized and admitted to transact business and issue surety bonds in the State of California, hereinafter called Surety, are held and firmly bound unto the City, and unto all persons or entities entitled to assert a claim against a payment bond under any of the aforesaid Civil Code provisions in the sum of _____DOLLARS ($_____), on the condition that if Contractor shall fail to pay for any materials or equipment furnished or used in performance of the Contract, or for any work or labor thereon of any kind, or for amounts due under the Unemployment Insurance Act with respect to such work or labor, or for any amounts required to be deducted, withheld, and paid over to the Franchise Tax Board or the Employment Development Department from the wages of employees of the Contractor and all subcontractors with respect to such work or labor, then the Surety shall pay the same in an amount not exceeding the sum specified above. If suit is brought upon this bond, Surety shall pay, in addition to the above sum, all costs, expenses and fees, including attorney's fees, reasonably incurred by any party in successfully enforcing the obligation secured hereby, all to be taxed as costs and included in any judgment rendered. Should the condition of this bond be fully performed, then this obligation shall become null and void, otherwise it shall be and remain in full force and effect, and shall bind Contractor, Surety, their heirs, executors, administrators, successors and assigns, jointly and severally.

It is hereby stipulated and agreed that this bond shall inure to the benefit of all persons, companies, corporations, political subdivisions, State agencies and other entities entitled to assert a claim against a payment bond under any of the aforesaid Civil Code provisions, so as to give a right of action to them or their assigns in any suit brought upon this bond. The Surety, for value received, hereby stipulates and agrees that no change, extension of time, alteration or addition to the terms of the Contract or to the work to be performed thereunder or to the specifications accompanying the same shall in any way affect its obligations on this bond, and it does hereby waive notice of any such change, extension, alteration or addition.

IN WITNESS WHEREOF, this instrument has been duly executed by authorized representatives of the Contractor and Surety.
SIGNED AND SEALED on _____ 2014.

_____
(Contractor) (Seal)

By _____

Title _____

ORIGINAL APPROVED AS TO FORM:

_____
City Attorney

_____
(Surety) (Seal)

By _____

Title _____
Agent Name and Address _____

_____
Agent Phone # _____
Surety Phone # _____
California License # _____
Surety Email: _____

Effective 7-1-12

CALFIRONIA LABOR CODE RELATING TO APPRENTICES ON PUBLIC WORKS PROJECTS

See following links: www.dir.ca.gov and/or www.leginfo.ca.gov

Form **W-9**
(Rev. August 2013)
Department of the Treasury
Internal Revenue Service

Request for Taxpayer Identification Number and Certification

Give Form to the requester. Do not send to the IRS.

Print or type
See Specific Instructions on page 2.

Name (as shown on your income tax return)

Business name/disregarded entity name, if different from above

Check appropriate box for federal tax classification:
☐ Individual/sole proprietor ☐ C Corporation ☐ S Corporation ☐ Partnership ☐ Trust/estate

☐ Limited liability company. Enter the tax classification (C=C corporation, S=S corporation, P=partnership) ▶

☐ Other (see instructions) ▶

Exemptions (see instructions):
Exempt payee code (if any)
Exemption from FATCA reporting code (if any)

Address (number, street, and apt. or suite no.)

Requester's name and address (optional)

City, state, and ZIP code

List account number(s) here (optional)

Part I Taxpayer Identification Number (TIN)

Enter your TIN in the appropriate box. The TIN provided must match the name given on the "Name" line to avoid backup withholding. For individuals, this is your social security number (SSN). However, for a resident alien, sole proprietor, or disregarded entity, see the Part I instructions on page 3. For other entities, it is your employer identification number (EIN). If you do not have a number, see *How to get a TIN* on page 3.

Note. If the account is in more than one name, see the chart on page 4 for guidelines on whose number to enter.

Social security number
☐☐☐ – ☐☐ – ☐☐☐☐

Employer identification number
☐☐ – ☐☐☐☐☐☐☐

Part II Certification

Under penalties of perjury, I certify that:

1. The number shown on this form is my correct taxpayer identification number (or I am waiting for a number to be issued to me), and
2. I am not subject to backup withholding because: (a) I am exempt from backup withholding, or (b) I have not been notified by the Internal Revenue Service (IRS) that I am subject to backup withholding as a result of a failure to report all interest or dividends, or (c) the IRS has notified me that I am no longer subject to backup withholding, and
3. I am a U.S. citizen or other U.S. person (defined below), and
4. The FATCA code(s) entered on this form (if any) indicating that I am exempt from FATCA reporting is correct.

Certification instructions. You must cross out item 2 above if you have been notified by the IRS that you are currently subject to backup withholding because you have failed to report all interest and dividends on your tax return. For real estate transactions, item 2 does not apply. For mortgage interest paid, acquisition or abandonment of secured property, cancellation of debt, contributions to an individual retirement arrangement (IRA), and generally, payments other than interest and dividends, you are not required to sign the certification, but you must provide your correct TIN. See the instructions on page 3.

Sign Here Signature of U.S. person ▶ Date ▶

General Instructions

Section references are to the Internal Revenue Code unless otherwise noted.

Future developments. The IRS has created a page on IRS.gov for information about Form W-9, at *www.irs.gov/w9*. Information about any future developments affecting Form W-9 (such as legislation enacted after we release it) will be posted on that page.

Purpose of Form

A person who is required to file an information return with the IRS must obtain your correct taxpayer identification number (TIN) to report, for example, income paid to you, payments made to you in settlement of payment card and third party network transactions, real estate transactions, mortgage interest you paid, acquisition or abandonment of secured property, cancellation of debt, or contributions you made to an IRA.

Use Form W-9 only if you are a U.S. person (including a resident alien), to provide your correct TIN to the person requesting it (the requester) and, when applicable, to:

1. Certify that the TIN you are giving is correct (or you are waiting for a number to be issued),
2. Certify that you are not subject to backup withholding, or
3. Claim exemption from backup withholding if you are a U.S. exempt payee. If applicable, you are also certifying that as a U.S. person, your allocable share of any partnership income from a U.S. trade or business is not subject to the withholding tax on foreign partners' share of effectively connected income, and
4. Certify that FATCA code(s) entered on this form (if any) indicating that you are exempt from the FATCA reporting, is correct.

Note. If you are a U.S. person and a requester gives you a form other than Form W-9 to request your TIN, you must use the requester's form if it is substantially similar to this Form W-9.

Definition of a U.S. person. For federal tax purposes, you are considered a U.S. person if you are:

- An individual who is a U.S. citizen or U.S. resident alien,
- A partnership, corporation, company, or association created or organized in the United States or under the laws of the United States,
- An estate (other than a foreign estate), or
- A domestic trust (as defined in Regulations section 301.7701-7).

Special rules for partnerships. Partnerships that conduct a trade or business in the United States are generally required to pay a withholding tax under section 1446 on any foreign partners' share of effectively connected taxable income from such business. Further, in certain cases where a Form W-9 has not been received, the rules under section 1446 require a partnership to presume that a partner is a foreign person, and pay the section 1446 withholding tax. Therefore, if you are a U.S. person that is a partner in a partnership conducting a trade or business in the United States, provide Form W-9 to the partnership to establish your U.S. status and avoid section 1446 withholding on your share of partnership income.

YEAR

CALIFORNIA FORM

2014 Withholding Exemption Certificate 590

The payee completes this form and submits it to the withholding agent.

Withholding Agent (Type or print)

Name

Payee

Name ☐ SSN or ITIN ☐ FEIN ☐ CA Corp no. ☐ CA SOS file no.

Address (apt./ste., room, PO Box, or PMB no.)

City (If you have a foreign address, see instructions.) State ZIP Code

Exemption Reason

Check only one reason box below that applies to the payee.

By checking the appropriate box below, the Payee certifies the reason for the exemption from the California income tax withholding requirements on payment(s) made to the entity or individual.

☐ **Individuals — Certification of Residency:**
I am a resident of California and I reside at the address shown above. If I become a nonresident at any time, I will promptly notify the withholding agent. See instructions for General Information D, Definitions.

☐ **Corporations:**
The corporation has a permanent place of business in California at the address shown above or is qualified through the California Secretary of State (SOS) to do business in California. The corporation will file a California tax return. If this corporation ceases to have a permanent place of business in California or ceases to do any of the above, I will promptly notify the withholding agent. See instructions for General Information D, Definitions.

☐ **Partnerships or limited liability companies (LLCs):**
The partnership or LLC has a permanent place of business in California at the address shown above or is registered with the California SOS, and is subject to the laws of California. The partnership or LLC will file a California tax return. If the partnership or LLC ceases to do any of the above, I will promptly inform the withholding agent. For withholding purposes, a limited liability partnership (LLP) is treated like any other partnership.

☐ **Tax-Exempt Entities:**
The entity is exempt from tax under California Revenue and Taxation Code (R&TC) Section 23701 _____ (insert letter) or Internal Revenue Code Section 501(c) _____ (insert number). If this entity ceases to be exempt from tax, I will promptly notify the withholding agent. Individuals cannot be tax-exempt entities.

☐ **Insurance Companies, Individual Retirement Arrangements (IRAs), or Qualified Pension/Profit Sharing Plans:**
The entity is an insurance company, IRA, or a federally qualified pension or profit-sharing plan.

☐ **California Trusts:**
At least one trustee and one noncontingent beneficiary of the above-named trust is a California resident. The trust will file a California fiduciary tax return. If the trustee or noncontingent beneficiary becomes a nonresident at any time, I will promptly notify the withholding agent.

☐ **Estates — Certification of Residency of Deceased Person:**
I am the executor of the above-named person's estate or trust. The decedent was a California resident at the time of death. The estate will file a California fiduciary tax return.

☐ **Nonmilitary Spouse of a Military Servicemember:**
I am a nonmilitary spouse of a military servicemember and I meet the Military Spouse Residency Relief Act (MSRRA) requirements. See instructions for General Information E, MSRRA.

CERTIFICATE OF PAYEE: Payee must complete and sign below.

Under penalties of perjury, I hereby certify that the information provided in this document is, to the best of my knowledge, true and correct. If conditions change, I will promptly notify the withholding agent.

Payee's name and title (type or print) _____ Telephone (_____)_____

Payee's signature ▶ _____ Date _____

Form **W-9**
(Rev. August 2013)
Department of the Treasury
Internal Revenue Service

Request for Taxpayer Identification Number and Certification

Give Form to the requester. Do not send to the IRS.

Print or type
See Specific Instructions on page 2.

Name (as shown on your income tax return)

Business name/disregarded entity name, if different from above

Check appropriate box for federal tax classification:
☐ Individual/sole proprietor ☐ C Corporation ☐ S Corporation ☐ Partnership ☐ Trust/estate

☐ Limited liability company. Enter the tax classification (C=C corporation, S=S corporation, P=partnership) ▶

☐ Other (see instructions) ▶

Exemptions (see instructions):
Exempt payee code (if any)
Exemption from FATCA reporting code (if any)

Address (number, street, and apt. or suite no.)

Requester's name and address (optional)

City, state, and ZIP code

List account number(s) here (optional)

Part I Taxpayer Identification Number (TIN)

Enter your TIN in the appropriate box. The TIN provided must match the name given on the "Name" line to avoid backup withholding. For individuals, this is your social security number (SSN). However, for a resident alien, sole proprietor, or disregarded entity, see the Part I instructions on page 3. For other entities, it is your employer identification number (EIN). If you do not have a number, see *How to get a TIN* on page 3.

Note. If the account is in more than one name, see the chart on page 4 for guidelines on whose number to enter.

Social security number
☐☐☐ – ☐☐ – ☐☐☐☐

Employer identification number
☐☐ – ☐☐☐☐☐☐☐

Part II Certification

Under penalties of perjury, I certify that:

1. The number shown on this form is my correct taxpayer identification number (or I am waiting for a number to be issued to me), and
2. I am not subject to backup withholding because: (a) I am exempt from backup withholding, or (b) I have not been notified by the Internal Revenue Service (IRS) that I am subject to backup withholding as a result of a failure to report all interest or dividends, or (c) the IRS has notified me that I am no longer subject to backup withholding, and
3. I am a U.S. citizen or other U.S. person (defined below), and
4. The FATCA code(s) entered on this form (if any) indicating that I am exempt from FATCA reporting is correct.

Certification instructions. You must cross out item 2 above if you have been notified by the IRS that you are currently subject to backup withholding because you have failed to report all interest and dividends on your tax return. For real estate transactions, item 2 does not apply. For mortgage interest paid, acquisition or abandonment of secured property, cancellation of debt, contributions to an individual retirement arrangement (IRA), and generally, payments other than interest and dividends, you are not required to sign the certification, but you must provide your correct TIN. See the instructions on page 3.

Sign Here Signature of U.S. person ▶ Date ▶

General Instructions

Section references are to the Internal Revenue Code unless otherwise noted.

Future developments. The IRS has created a page on IRS.gov for information about Form W-9, at *www.irs.gov/w9*. Information about any future developments affecting Form W-9 (such as legislation enacted after we release it) will be posted on that page.

Purpose of Form

A person who is required to file an information return with the IRS must obtain your correct taxpayer identification number (TIN) to report, for example, income paid to you, payments made to you in settlement of payment card and third party network transactions, real estate transactions, mortgage interest you paid, acquisition or abandonment of secured property, cancellation of debt, or contributions you made to an IRA.

Use Form W-9 only if you are a U.S. person (including a resident alien), to provide your correct TIN to the person requesting it (the requester) and, when applicable, to:

1. Certify that the TIN you are giving is correct (or you are waiting for a number to be issued),
2. Certify that you are not subject to backup withholding, or
3. Claim exemption from backup withholding if you are a U.S. exempt payee. If applicable, you are also certifying that as a U.S. person, your allocable share of any partnership income from a U.S. trade or business is not subject to the withholding tax on foreign partners' share of effectively connected income, and
4. Certify that FATCA code(s) entered on this form (if any) indicating that you are exempt from the FATCA reporting, is correct.

Note. If you are a U.S. person and a requester gives you a form other than Form W-9 to request your TIN, you must use the requester's form if it is substantially similar to this Form W-9.

Definition of a U.S. person. For federal tax purposes, you are considered a U.S. person if you are:

- An individual who is a U.S. citizen or U.S. resident alien,
- A partnership, corporation, company, or association created or organized in the United States or under the laws of the United States,
- An estate (other than a foreign estate), or
- A domestic trust (as defined in Regulations section 301.7701-7).

Special rules for partnerships. Partnerships that conduct a trade or business in the United States are generally required to pay a withholding tax under section 1446 on any foreign partners' share of effectively connected taxable income from such business. Further, in certain cases where a Form W-9 has not been received, the rules under section 1446 require a partnership to presume that a partner is a foreign person, and pay the section 1446 withholding tax. Therefore, if you are a U.S. person that is a partner in a partnership conducting a trade or business in the United States, provide Form W-9 to the partnership to establish your U.S. status and avoid section 1446 withholding on your share of partnership income.

YEAR

CALIFORNIA FORM

2014 Withholding Exemption Certificate 590

The payee completes this form and submits it to the withholding agent.

Withholding Agent (Type or print)

Name

Payee

Name ☐ SSN or ITIN ☐ FEIN ☐ CA Corp no. ☐ CA SOS file no.

Address (apt./ste., room, PO Box, or PMB no.)

City (If you have a foreign address, see instructions.) State ZIP Code

Exemption Reason

Check only one reason box below that applies to the payee.

By checking the appropriate box below, the Payee certifies the reason for the exemption from the California income tax withholding requirements on payment(s) made to the entity or individual.

☐ **Individuals — Certification of Residency:**
I am a resident of California and I reside at the address shown above. If I become a nonresident at any time, I will promptly notify the withholding agent. See instructions for General Information D, Definitions.

☐ **Corporations:**
The corporation has a permanent place of business in California at the address shown above or is qualified through the California Secretary of State (SOS) to do business in California. The corporation will file a California tax return. If this corporation ceases to have a permanent place of business in California or ceases to do any of the above, I will promptly notify the withholding agent. See instructions for General Information D, Definitions.

☐ **Partnerships or limited liability companies (LLCs):**
The partnership or LLC has a permanent place of business in California at the address shown above or is registered with the California SOS, and is subject to the laws of California. The partnership or LLC will file a California tax return. If the partnership or LLC ceases to do any of the above, I will promptly inform the withholding agent. For withholding purposes, a limited liability partnership (LLP) is treated like any other partnership.

☐ **Tax-Exempt Entities:**
The entity is exempt from tax under California Revenue and Taxation Code (R&TC) Section 23701 _____ (insert letter) or Internal Revenue Code Section 501(c) _____ (insert number). If this entity ceases to be exempt from tax, I will promptly notify the withholding agent. Individuals cannot be tax-exempt entities.

☐ **Insurance Companies, Individual Retirement Arrangements (IRAs), or Qualified Pension/Profit Sharing Plans:**
The entity is an insurance company, IRA, or a federally qualified pension or profit-sharing plan.

☐ **California Trusts:**
At least one trustee and one noncontingent beneficiary of the above-named trust is a California resident. The trust will file a California fiduciary tax return. If the trustee or noncontingent beneficiary becomes a nonresident at any time, I will promptly notify the withholding agent.

☐ **Estates — Certification of Residency of Deceased Person:**
I am the executor of the above-named person's estate or trust. The decedent was a California resident at the time of death. The estate will file a California fiduciary tax return.

☐ **Nonmilitary Spouse of a Military Servicemember:**
I am a nonmilitary spouse of a military servicemember and I meet the Military Spouse Residency Relief Act (MSRRA) requirements. See instructions for General Information E, MSRRA.

CERTIFICATE OF PAYEE: Payee must complete and sign below.

Under penalties of perjury, I hereby certify that the information provided in this document is, to the best of my knowledge, true and correct. If conditions change, I will promptly notify the withholding agent.

Payee's name and title (type or print) _____ Telephone (_____)_____

Payee's signature ▶ _____ Date _____

SPECIAL PROVISIONS

TABLE OF CONTENTS

SECTION 1 – GENERAL REQUIREMENTS 6

1.01 Project Description 6
1.02 Site Walk 7
1.03 Project Duration 7
1.04 Well Facility Locations and Descriptions 8
Well 94 8
Well 107 8
Well 120 9
Well 122 10
Well 126 10
Well 129 11
Well 133 12
Well 138 13
1.05 Time of Award 13
1.06 Providing Bonds and Surety 14
1.07 Interpretation of Contract Documents 14
1.08 Proof of Compliance with Contract 14
1.09 Submittals (Well Casing Rehabilitation) 14
1.10 Project Signs 15
1.11 Manufacturer's Instructions 15
1.12 Project Scheduling 15
1.13 Administrative Penalty Ordinance 15
1.14 Water Quality Control 16
1.15 Communication with City Engineer 16
1.16 Health and Safety Requirements 16
1.17 Wastewater Discharge and Solids Disposal 17
1.18 Compliance with Permit, License, and Regulatory Requirements 18
1.19 Materials and Equipment 18
1.20 Public Right-of-Way and Easements 19
1.21 Existing Facilities 19
1.22 Coordination of Work 19
1.23 Maintaining Water, Sewer, and Drainage Flows 19
1.24 Temporary Diversion of Sewer and Drainage Flows 20
1.25 Work Performed by City Crews 20
1.26 Existing Site Conditions 21
1.27 Handling and Removal of Hazardous or Contaminated Materials 21
1.28 Public Notification of Work 21

1.29 Maintenance of Traffic, Public Safety, and Convenience 22
1.30 Removal of Street Parking 24
1.31 Project Closeout 24
1.32 Payment 24

SECTION 2: TECHNICAL SPECIFICATIONS - Well Casing Rehabilitation 25

2.01 Pre-Mobilization Site Video 25
2.02 Mobilization, Site Setup, Demobilization, and Site Clean-up 25
2.03 Pre-Cleaning Test Pumping 25
2.04 Pre-Cleaning Spinner Logging 26
2.05 Traffic Control 26
2.06 Brushing and Sediment Removal 26
2.07 Well Casing Video Surveys 27
2.08 Additional Brushing and Sediment Removal 27
2.09 Screen and Casing Repair 27
2.10 Agitating the Near-Well Environment 27
2.11 Mechanical Cleaning 28
2.12 Chemical Cleaning 29
2.13 Additional Mechanical and Chemical Cleaning 30
2.14 Post-Cleaning Spinner Logging 30
2.15 Deviation Survey 30
2.16 Post-Cleaning Test Pumping 30
2.17 Disinfect Well 31
2.18 Wastewater Treatment and Disposal 32
2.19 Waste Solids Disposal 33

SECTION 3: TECHNICAL SPECIFICATIONS - General Sewer Construction 34

3.01 Dewatering and Infiltration Control 34
3.02 Trench Excavation and Backfill 34
3.03 Pavement Cutting and Surface Restoration 34
3.04 Temporary Paving 34
3.05 Tree Preservation Requirements 34
3.06 Archeological Resources Discovery 35
3.07 Lateral Construction 36
3.08 Manhole Construction 37
3.09 Payment 37

SECTION 4: TECHNICAL SPECIFICATIONS – Site Improvements 39

DIVISION 1 – GENERAL....39

Section 01330 - Submittals....39
Section 01410 - Quality Control....44
Section 01500 - Construction Facilities and Temporary Controls....47
Section 01511 - Temporary Electricity....50
Section 01600 - Materials and Equipment....53
Section 01770 - Contract Closeout....57

DIVISION 2 – SITE CONSTRUCTION....59

Section 02220 - Demolition and Salvage of Materials....59
Section 02240 - Control of Water....62
Section 02250 - Sheeting, Shoring, and Bracing....64
Section 02315 - Earthwork....66
Section 02321 - Controlled Density Fill....73
Section 02620 - Geotextiles....75
Section 02740 - Paving and Gravel Surfacing....77
Section 02741 - Asphalt Concrete Paving....81
Section 02820 - Chain Link Fences and Gates....83

DIVISION 3 – CONCRETE....90

Section 03100 - Concrete Framework....90
Section 03150 - Concrete Accessories....95
Section 03200 - Concrete Reinforcement....99
Section 03300 - Cast-in-Place Concrete....102

DIVISION 4 – MASONRY (Not Used)....112

DIVISION 5 – METALS....113

Section 05080 - Mechanical Zinc Coating....113
Section 05090 - Welding....115
Section 05100 - Structural Metals....121
Section 05451 - Anchor Bolts....125
Section 05505 - Miscellaneous Metals....128
Section 05530 - Grating, Steel Stairs, Floor Plates, Safety Stair Treads, and Cover Plates....133
Section 05910 - Hot-Dip Zinc Coating....137

DIVISION 6 – WOOD AND PLASTIC (Not Used)....139

DIVISION 7 – THERMAL AND MOISTURE PROTECTION (Not Used)....140

DIVISION 8 – DOORS AND WINDOWS (Not Used) 141

DIVISION 9 – FINISHES 142

Section 09900 - Painting 142
Section 09970 - Metal Coatings 148

DIVISION 10 – SPECIALTIES (Not Used) 154

DIVISION 11 – EQUIPMENT 155

Section 11400 - Submersible Pumps 155

DIVISION 12 – FURNISHINGS (Not Used) 159

DIVISION 13 – SPECIAL CONSTRUCTION (Not Used) 160

DIVISION 14 – CONVEYANCE SYSTEMS (Not Used) 161

DIVISION 15 – MECHANICAL (Not Used) 162

DIVISION 16 – ELECTRICAL 163

Section 16010 - Electrical Work 163
Section 16012 - Seismic Restraint for Electrical Equipment 168
Section 16013 - Short Circuit Study, Protective Device Evaluation, Coordination Study, and Arc Flash Hazard Analysis 169
Section 16110 - Raceway Systems 181
Section 16120 - Low Voltage Wire and Cable 191
Section 16432 - Low Voltage Commercial Safety Socket 199
Section 16480 - Low Voltage Motor Control Center 201
Section 16530 - Lighting 202
Section 16950 - Operational Testing 204

DIVISION 17 – INSTRUMENTATION 209

Section 17100 - Process Control and Instrumentation Systems 209
Section 17101 - Instrumentation 218
Section 17102 - Flow Measuring Systems 223
Section 17520 - Programmable Logic Controller System 227

SECTION 3 – ITEMS OF THE PROPOSAL 233

Item 1 - Pre-Mobilization Site Video 233

Item 2 - Mobilization, Site Setup, Demobilization, and Site Cleanup 233
Item 3 - Pre-Cleaning Test Pumping....234
Item 4 - Pre-Cleaning Spinner Logging....234
Item 5 - Traffic Control 234
Item 6 - Well Casing Video Surveys 235
Item 7 - Screen and Casing Repair....235
Item 8 - Post-Cleaning Spinner Logging 236
Item 9 - Deviation Surveys....236
Item 10 - Post-Cleaning Test Pumping 236
Item 11 - Waste Solids Disposal 236
Item 12 - Brushing and Sediment Removal 237
Item 13 - Agitating the Near Well Environment....237
Item 14 - Mechanical Cleaning 237
Item 15 - Chemical Cleaning....238
Item 16 - Well Disinfection 238
Item 17 - Wastewater Treatment and Disposal....238
Item 18 - Install New 8-Inch Flow Meter 239
Item 19 - Electrical Improvements 239
Item 20 - Install City Supplied Fluoride System 239
Item 21 - Chain Link Fencing and Gates 240
Item 22 - Wellhead Construction....240
Item 23 - 50 Horsepower Submersible Pump Installation....241
Item 24 - 75 Horsepower Submersible Pump Installation....241
Item 25 - 100 Horsepower Submersible Pump Installation....241
Item 26 - 6-Inch Pump Column Piping 241
Item 27 - 8-Inch Pump Column Piping 241
Item 28 - 10-Inch Pump Column Piping 241
Item 29 - Site Paving....241
Item 30 - Sand Pit 242
Item 31 - 6-Inch Sewer Laterals....242
Item 32 - Sewer Manhole....242

ATTACHMENTS....244

ATTACHMENT A - Sanitary District Wastewater Discharge Permit 244
ATTACHMENT B - Project Task Completion Form 249
ATTACHMENT C - Daily Field Log....251
ATTACHMENT D - Neighborhood Notification Letter 253

SECTION 1 – GENERAL REQUIREMENTS

1.01 Project Description

The City of Sacramento seeks bids from qualified Contractors to rehabilitate Wells 94, 107, 120, 122, 126, 129, 133, and 138. The project consists of two major components, well casing rehabilitation, and installation and construction of new site improvements. Site improvements include but are not limited to new fencing, pumping, electrical, and chemical systems, paving, switchgear enclosures, piping fabrication, and wellhead demolition and construction. Contractors are to provide all labor, materials, and equipment necessary to successfully complete the project. All work shall be performed in accordance with the requirements presented in these Special Provisions, the City of Sacramento Standard Specification adopted June 2007 (CSSS) including Addendum No. 1 and Addendum No. 2 (April 2012), and the contract documents. The Special Provisions contained herein are intended to be consistent with the California Department of Public Health Waterworks Standards, ANSI/AWWA Standard A100-06 and NSF/ANSI Standards 60 and 61. No exceptions to the project requirements shall be made unless a written request is made by the Contractor and written approval is provided by the Engineer before the work is performed.

Well casing rehabilitation shall include the following work performed by the Contractor:

1. Pre-mobilization site video
2. Mobilization, site setup, demobilization and site cleanup
3. Pre-cleaning test pumping
4. Pre-cleaning spinner logging
5. Traffic control
6. Brushing and sediment removal
7. Pre and post-brushing video survey
8. Additional sediment removal and brushing
9. Additional post-brushing video survey
10. Screen and casing repair
11. Agitating the near-well environment
12. Mechanical cleaning
13. Chemical cleaning
14. Post-cleaning video survey
15. Additional mechanical and chemical cleaning
16. Additional post-cleaning video survey
17. Post-cleaning spinner logging
18. Deviation survey
19. Post-cleaning test pumping

20. Well disinfection
21. Wastewater treatment and disposal
22. Waste solids disposal
23. Pump removal and installation

Additional work related to the project to be performed by the City includes:

1. Wastewater sampling as required in the wastewater discharge permit. A copy has been provided in Attachment A.
2. Water quality testing during test pumping (at the end of each step in the step-discharge test).

Site improvement work shall include but not be limited to the following work performed by the Contractor:

1. Wellhead demolition and construction
2. MCC installation (City provided)
3. MCC enclosure construction
4. Fencing demolition, disposal, installation
5. Wellhead pipe fabrication and installation
6. Wellhead baseplate fabrication and installation
7. Fluoride system installation (City provided)
8. Asphalt paving
9. Sign fabrication and installation
10. Conduit and conductor installation
11. Water level detection system construction and installation
12. Lighting installation
13. Well column, flow meter, and pump installation
14. Electrical and chemical systems testing

Any work to be performed by the Contractor and City shall be coordinated by the Engineer.

1.02 Site Walk

The project site walk shall begin approximately two weeks after bid posting at 9 a.m. at Well 129, Rio Linda Blvd. at Harris Ave., Sacramento, CA (adjacent to empty lot at 3904 Rio Linda Blvd.).

1.03 Project Duration

It is anticipated that the project shall be completed within 210 calendar days of the Contractor receiving notice to proceed from the City. The Contractor shall perform well casing rehabilitation work on two wells simultaneously. Site security at all sites must be maintained at all times.

1.04 Well Facility Locations and Descriptions

Well 94

Site Location:

0 Northgate Blvd., Sacramento, CA
(behind Furniture Town at 3315 Northgate Blvd., off Rio Tierra Ave.)
Assessor's Parcel Number: 250-0520-006-0000

Well Construction:

Year constructed -	1955
Depth -	362 feet
Borehole diameter -	Unknown (sanitary seal to 80-feet)
Casing diameter -	14 inches
Casing material -	Steel
Screen Type -	Torch cut
Screen Interval -	288 to 298 feet bgs

Static Well Volume:

Approximately 2,670 gallons

Well Condition:

In service. Heavy encrustation. Historic record indicates well has false table, characteristic of the area.

Pumping system:

Vertical turbine

Static water level:

Approximately 40 feet bgs

Well site:

Cinder block walls with locking doors, where two sides are walls of adjacent commercial buildings. Site dimensions are approximately 25 by 60 feet. Well is not enclosed in a building.

Perimeter:

Well site is on back side of commercial complex within back parking area. Recycling center located nearby.

Water source:

On-site hose bib (3/4-inch)

Well 107

Site Location:

7907 Grandstaff Dr., Sacramento, CA
Assessor's Parcel Number: 117-0021-023-0000

Well Construction:

Year constructed -	1964
Depth -	318 feet
Borehole diameter -	28 inches (sanitary seal to 40-ft)

Casing diameter - 14 inches
Casing material - Steel
Screen Type - Sawed slots
Screen Interval - 91 to 103, 123 to 171, and 179 to 191 feet bgs

Static Well Volume:
Approximately 2,810 gallons

Well Condition:
In service. Heavy encrustation.

Pumping system:
Vertical turbine

Static water level:
Approximately 78 feet bgs

Well site:
Fenced with a locking gate. Site dimensions are approximately 22 by 54 feet. Well is not enclosed in a building.

Perimeter:
Well site is between two residential lots. Driveway access is off fronting public street with a series of existing SMUD vaults and cabinets along the west side.

Water source:
On-site hose bib (3/4-inch)

Well 120

Site Location:
2940 Branch St., Sacramento, CA
Assessor's Parcel Number: 265-0121-024-0000

Well Construction:
Year constructed - 1946
Depth - 440 feet
Borehole diameter - Unknown (sanitary seal to 60-ft)
Casing diameter - 12 inches
Casing material - Steel
Screen Type - Perforated
Screen Interval - 265 to 270, 315 to 355, 385 to 392, and 410 to 420 feet bgs

Static Well Volume:
Approximately 3,620 gallons

Well Condition:
In service. Heavy encrustation.

Pumping system:
Vertical turbine

Static water level:
Approximately 73 feet bgs

Well site:
Fenced with a locking gate. Site dimensions are approximately 39 by 89 feet. Well is enclosed in a building. Existing phone cables run overhead through site.

Perimeter:
Well site is between two residential lots. Driveway access is off fronting public street.

Water source:
On-site hose bib (3/4-inch)

Well 122

Site Location:
0 Juliesse Ave., Sacramento, CA
(behind residence at 2986 Del Paso Blvd.)
Assessor's Parcel Number: 265-0191-002-0000

Well Construction:

Year constructed -	1948
Depth -	422 feet
Borehole diameter -	Unknown (sanitary seal to 81-ft)
Casing diameter -	12 inches
Casing material -	Steel
Screen Type -	Perforated
Screen Interval -	230 to 245, 275 to 286, 305 to 315, 325 to 330, 350 to 365, and 385 to 400 feet bgs

Static Well Volume:
Approximately 3,610 gallons

Well Condition:
In service. Heavy encrustation.

Pumping system:
Vertical turbine

Static water level:
Approximately 66 feet bgs

Well site:
Fenced with a locking gate. Site dimensions are approximately 50 by 53 feet. Well is enclosed in a building.

Perimeter:
Well site is between residential lot and large empty lot. Driveway access is off fronting public street.

Water source:
On-site hose bib (3/4-inch)

Well 126

Site Location:
0 Rivera Dr., Sacramento, CA

(adjacent to residence at 1324 Rivera Dr.)
Assessor's Parcel Number: 251-0260-005-0000

Well Construction:

Year constructed -	1950
Depth -	432 feet
Borehole diameter -	Unknown (sanitary seal to 80-ft)
Casing diameter -	12 inches
Casing material -	Steel
Screen Type -	Perforated
Screen Interval -	188 to 215, 270 to 280, 298 to 310, 375 to 385, and 403 to 410 feet bgs

Static Well Volume:
Approximately 4,180 gallons

Well Condition:
In service. Heavy encrustation.

Pumping system:
Vertical turbine

Static water level:
Approximately 68 feet bgs

Well site:
Fenced with a locking gate. Site dimensions are approximately 37 by 88 feet. Well is enclosed in a building.

Perimeter:
Well site is between residential lot and public park. Driveway access is off fronting public street.

Water source:
On-site hose bib (3/4-inch)

Well 129

Site Location:
0 Harris Ave., Sacramento, CA
(adjacent to empty lot at 3904 Rio Linda Blvd.)
Assessor's Parcel Number: 251-0051-002-0000

Well Construction:

Year constructed -	1957
Depth -	300 feet
Borehole diameter -	Unknown (sanitary seal to 52-ft)
Casing diameter -	14 inches
Casing material -	Steel
Screen Type -	Milled slots
Screen Interval -	136 to 144, 180 to 186, 195 to 197, 240 to 246, 272 to 280, and 285 to 295 feet bgs

Static Well Volume:

Approximately 3,300 gallons

Well Condition:
In service. Heavy encrustation.

Pumping system:
Submersible

Static water level:
Approximately 70 feet bgs

Well site:
Fenced with a locking gate. Site dimensions are approximately 20 by 50 feet. Well is not enclosed in a building.

Perimeter:
Well site is within a commercial parking lot, adjacent to a public utility easement.

Water source:
On-site hose bib (3/4-inch)

Well 133

Site Location:
0 Pell Dr., Sacramento, CA
(behind industrial building at 4600 Pell Dr.)
Assessor's Parcel Number: 237-0022-036-0000

Well Construction:

Year constructed -	1962
Depth -	514 feet
Borehole diameter -	Unknown (sanitary seal to 60-ft)
Casing diameter -	16 inches
Casing material -	Steel
Screen Type -	Milled slots
Screen Interval -	260 to 510 feet bgs

Static Well Volume:
Approximately 6,950 gallons

Well Condition:
In service. Heavy encrustation.

Pumping system:
Vertical turbine

Static water level:
Approximately 63 feet bgs

Well site:
Fenced with a locking gate. Site dimensions are approximately 31 by 83 feet. Well is not enclosed in a building.

Perimeter:

Well site is behind commercial property with open, undeveloped land to three sides. Access to site is through gated commercial property from Pell Drive through adjacent utility easement and undeveloped public right-of-way.

Water source:
On-site hose bib (3/4-inch)

Well 138

Site Location:
4020 Fell St., Sacramento, CA
Assessor's Parcel Number: 237-0311-011-0000

Well Construction:

Year constructed -	1965
Depth -	408 feet
Borehole diameter -	28 inches (sanitary seal to 50-ft)
Casing diameter -	14 inches
Casing material -	Steel
Screen Type -	Factory Milled Sawed
Screen Interval -	113 to 370 feet bgs

Static Well Volume:
Approximately 4,710 gallons

Well Condition:
In service. Heavy encrustation.

Pumping system:
Vertical turbine

Static water level:
Approximately 110 feet bgs

Well site:
Fenced with a locking gate. Site dimensions are approximately 52 by 74 feet. Well is enclosed in a building.

Perimeter:
Well site is between residential lot and drainage channel. Driveway access is off fronting public street.

Water source:
On-site hose bib (3/4-inch)

1.05 Time of Award

Time of Award for this contract shall be made within Sixty (60) calendar days after opening of the proposals to the lowest responsible bidder, per Section 3-2 of the CSSS.

1.06 Providing Bonds and Surety

The Contractor shall provide a signed Agreement and surety bonds within ten (10) calendar days after receipt of notice to award by the City and prior to award by the City Council. The Contractor shall be reimbursed for all surety bond costs should the City Council not award a contract.

1.07 Interpretation of Contract Documents

Questions from bidder's concerning the interpretation of any portion of the contract documents may be directed to Megan Thomas of the City of Sacramento, Department of Utilities, 1395 35th Ave, Sacramento, California, 95822, phone (916) 808-1729. Interpretation, where necessary, shall be made by the City in the form of an addendum to the contract documents and, when issued, shall be sent as promptly as is practicable to all parties to whom the bid documents have been issued. All such addenda shall become part of the contract.

It shall also be the bidder's responsibility to call to the attention of the Engineer any missing pages or drawings in the contract documents including the addenda. These items shall be brought to the attention of the Engineer at least seven (7) calendar days prior to the bid opening date.

1.08 Proof of Compliance with Contract

In order that the Engineer may determine whether the Contractor has complied with the requirements of the contract documents not readily determinable through inspection and tests of plant, equipment, work, or materials, the Contractor shall at any time when requested, at the Contractor's expense, submit to the Engineer properly authenticated documents or other satisfactory proofs as to his compliance with such requirements.

1.09 Submittals (Well Casing Rehabilitation)

In accordance with Section 5-7 of the CSSS, Contractor shall prepare and submit for review four (4) copies of the following submittals:

1. Project schedule
2. Material and equipment storage
3. Well aggregate (if required)
4. Test pumping/spinner logging/video survey/deviation survey results and updated Project Task Completion Form (upon completion of work)
5. Traffic control plan(s)
6. Wastewater storage and disposal plan
7. Solid waste disposal plan
8. Health and safety plan with employee safety training certifications
9. Hydraulic/compressive or acoustic energy methods (see Technical Specifications, Section 2.11, "Mechanical Cleaning")
10. Public notification
11. Chemical use and storage plans

12. Daily field logs (daily)
13. Any other City requested items

Contractor is advised that at the Engineer's discretion, the above list may be expanded to include additional items to which Section 5-7 of the CSSS shall apply. Contractor shall keep one (1) copy of the approved Traffic Control Plan and the local sanitary district wastewater discharge permit at each site at all times while work is being performed.

1.10 Project Signs

Prior to beginning any onsite work the Contractor shall install one (1) project sign at each well site. The signs shall be supplied by the City and are approximately 30-inches by 54-inches. Location and height of sign installation shall be as directed by the Engineer. In general, the signs shall be installed a minimum of seven (7) feet and maximum of ten (10) feet above surrounding grade. If acceptable to the Engineer an existing sign post may be used, otherwise, the Contractor shall be required to install a new post. Each sign and post installed by the Contractor shall be removed at the end of the project and the sign returned to the City.

1.11 Manufacturer's Instructions

Contractor shall comply with manufacturer's installation instructions and procedures in accordance with Section 5-16 of the City CSSS.

1.12 Project Scheduling

The Contractor shall submit a detailed schedule showing all items of work prior to initiating work. **Well casing rehabilitation shall be performed on two wells at a time in order to move the project toward completion in a timely manner. To minimize impact to the distribution system, the Contractor may perform work on only four wells at any given time. Group 1 shall include Wells 94, 107, 129, and 133. The Contractor shall begin Group 1 casing rehabilitation work on Wells 94 and 133 first. Group 2 shall include Wells 120, 122, 126, and 138. The Contractor shall begin Group 2 casing rehabilitation work on Wells 122 and 138 first.** Upon written approval by the Engineer, site improvement work may occur at additional Group 1 or 2 well sites provided that no more than two wells are offline at any time during construction. The schedule shall include the proposed sequencing of well rehabilitation activities. The schedule shall be submitted, reviewed and updated in accordance with Section 7-2 of the CSSS. No progress payments shall be made for work completed prior to acceptance of the schedule.

Weekend, night, and holiday work shall be done in accordance with Section 7-4 of the CSSS.

1.13 Administrative Penalty Ordinance

The Contractor shall become familiar with Chapter 12.20 of the City Code which contains minimum requirements and restrictions relating to construction activities within the City right-of-way and establishes administrative penalties for non-compliance of these requirements. The Contractor may be assessed the administrative penalty for each violation of any provision addressed by the ordinance, unless modified herein, and amounts can be deducted from the Contract. The ordinance includes the following general categories:

- Working hours for the City's "Primary Streets"
- Traffic control plan requirements
- Access to private property
- Maintenance of construction areas
- Maintenance of traffic, public safety, and convenience
- Care of existing known facilities
- Protection of existing improvements
- Public notification
- Noise levels

Copies of the ordinance are available from the City Clerk's Office at 915 I Street, Sacramento, CA 95814, and at www.cityofsacramento.org.

1.14 Water Quality Control

The Contractor shall be responsible for the requirements consisting of regulations contained in the National Pollution Discharge Elimination System (NPDES) Stormwater Permit issued to the City and in accordance with Section 16 of the CSSS.

The City reserves the right to take corrective action and withhold the City's costs for corrective action from progress payments or final payment in accordance with Section 7, "Retention of Sums Charged against the Contractor", of the Agreement, contained herein. Any fines, including third-party claims, levied against the City as a result of the Contractor's non-compliance are the Contractor's sole responsibility and shall be withheld from progress payments or final payment in accordance with Section 7 of the Agreement.

1.15 Communication with City Engineer

The Engineer for the project shall be a member of City staff. A consulting hydrogeologist from The Source Group, Inc. shall support the Engineer on the project. The Engineer shall not be on-site during all portions of the project work and the Contractor shall be required to communicate by cell phone and email during performance of the work. A communication schedule shall be developed with the successful bidder. Copies of daily field logs shall be delivered to the Engineer during the project on a daily basis. An example daily field log is provided as Attachment C. A complete set of all daily field logs shall also be provided to the Engineer upon completion of the project. The Contractor shall also submit updated versions of the Project Task Completion Form (Attachment B) as project tasks are completed.

1.16 Health and Safety Requirements

The Contractor is warned that existing sewers and appurtenances have been exposed to sewage and industrial wastes. These facilities shall therefore be considered contaminated with disease-causing organisms. Personnel in contact with contaminated facilities, debris, wastewater, or similar items shall be advised by the Contractor of the necessary precautions that must be taken to avoid becoming diseased. It is the Contractor's responsibility to urge his personnel to observe a

strict regime of proper hygienic precautions, including any inoculations recommended by the local public health officer.

Because of the danger of solvents, gasoline, and other hazardous material in the existing sewers, these areas shall be considered hazardous to open flame, sparks, or unventilated occupancy. The Contractor shall be aware of these dangers and shall take the necessary measures to assure his personnel observe proper safety precautions when working in these areas.

The Contractor shall not allow any wastewater to discharge from sewage collection systems onto adjacent lands or waters. In case of accidental discharge, the Contractor shall be responsible for containment, immediate cleanup and disposal at his own expense to the full satisfaction of the Engineer. Where containment is not possible, adequate disinfection shall be provided by the Contractor at his expense as directed by the Engineer or agency with jurisdiction. If, in the opinion of the Engineer, the Contractor fails to adequately follow the above guidelines, he shall make arrangements to have the work done by others, and have the cost charged to the Contractor.

A project-specific health and safety plan shall be prepared by the Contractor and submitted to the Engineer before mobilization to the site. Maintenance of an exclusion zone is required for all tasks conducted by the Contractor on the well site regardless of whether specifically mentioned in individual task descriptions in the Technical Specifications. All staff who shall be on-site during the handling of chemicals must be HAZWOPER trained (40-hour and 8-hour annual refresher) consistent with CFR 291910.120. The Contractor shall provide evidence of appropriate training before chemicals are handled on-site.

1.17 Wastewater Discharge and Solids Disposal

All wastewater shall be contained in tanks until discharged. Well site space restrictions may make on-site storage not possible and other approaches may be required. All tanks used to store wastewater shall be thoroughly cleaned prior to arrival on site. Tanks that arrive on site will be inspected by the Engineer prior to use to ensure no chemical odors, residues, or solids are present from previous usage. Any tank deemed not sufficiently clean by the Engineer will not be permitted for use. Wastewater discharge shall be to the local sanitary district at specified discharge locations and rates. The Contractor must comply with the discharge requirements set by the sanitary district (i.e., pH, TSS, dissolved constituent concentrations, etc.). A copy of the wastewater discharge permit that has been issued to the City by the Sacramento Regional County Sanitation District (Attachment A) provides information regarding the discharge requirements and locations. The City shall periodically verify Contractor compliance with the discharge requirements by collecting samples and conducting chemical analysis on site and at its laboratory. The Contractor shall not be responsible for sample collection and analysis, but shall be responsible for meeting all other permit requirements, including but not limited to pH testing of the water prior to it entering the sewer system. There may be delays before discharge is allowed while the chemical analyses are performed. Additional compensation shall not be provided to the Contractor should a delay occur that is related to sample analysis and the results that are produced.

The Contractor shall monitor water levels in the sewer system at each discharge location. Should any evidence of surcharging be apparent at the discharge site, the Contractor shall immediately cease the discharge until surcharging is no longer evident. Any overflows shall be immediately contained and remediated by the Contractor. Cleanup costs or penalties resulting from an overflow attributable to the discharge shall be paid by the Contractor.

All solid waste generated during the project shall be removed by the Contractor so that the site is returned to its pre-project state. Wastes, including trash, unused chemicals, and solids, removed

from the well shall be disposed of properly. Documentation of proper waste disposal must be provided to the Engineer before the task is considered complete.

Per the discharge permit (Attachment A), well-specific discharge rate and location requirements are as follows:

Well No.	Approved Discharge Location	Maximum Discharge Rate (gpm)(1)
94	~20-ft east of Well 94 in public sidewalk at Rio Tierra Ave. (SASD manhole #350-149-1048)	300
107	Fronting 7905 Grandstaff Dr. in Grandstaff Dr. (SASD manhole #292-161-1037)	100
120	~80-ft north of Well 120 in Branch St. (City manhole U19, #808)	300
122	~40-ft south of Well 122 in Juliesse Ave. (City manhole V20, #204)	100
126	~10-ft east of Well 126 in Rivera Dr. (City manhole T20, #408)	200
129	~55-ft south of Well 129 in R.O.W. west of Rio Linda Blvd. (City manhole R19, #707)	62(2)
133	~20-ft north of Well 133 in R.O.W. east of 4600 Pell Dr. (City manhole P16, #610)	150
138	~35-ft north of Well 138 in Fell St. (City manhole R20, #105)	170

(1) Discharge should only be performed during dry weather conditions. Most pipe segments are at or above capacity during wet.
(2) Flow rate at this location may be increased to 143-gpm between 3:00AM and 5:00AM. Although the existing pipe can handle greater capacity, downstream pipelines are at or near capacity during peak dry weather flows. Therefore downstream pipe controls.

1.18 Compliance with Permit, License, and Regulatory Requirements

The Contractor is responsible for compliance with all permit, license, and regulatory requirements (i.e., OSHA, Department of Transportation, local encroachment, air quality) for performing the work. The Contractor is responsible for acquisition and payment of any necessary encroachment permits from the City, and any permits required by the Sacramento County Environmental Management Department.

For the well rehabilitation work the Contractor shall hold a valid C-57 Water Well Contractor's license throughout the duration of the project.

1.19 Materials and Equipment

The Contractor is responsible for the care and protection of all materials and equipment until the completion and final acceptance of the work, in accordance with Sections 5-15, 5-16, 5-17, 5-18, 5-21, and 5-22 of the CSSS and these Special Provisions.

1.20 Public Right-of-Way and Easements

All water, sewer & drainage pipe and appurtenances used as part of this project are to be placed within public street rights-of-way and easements. The Contractor shall confine his or her operations within the limits of existing street right-of-way or easements as much as practicable.

In the event the Contract requirements necessitate the Contractor to encroach onto adjoining private property the Contractor shall make all necessary arrangements with the owner of the property for such encroachment. A copy of any written agreements entered into between the Contractor and the property owner concerning encroachment onto private property shall be provided to the Engineer prior to beginning any work on the property described in the agreement.

1.21 Existing Facilities

Protection and maintenance of existing utilities shall meet the applicable requirements of Section 13 of the CSSS and these Special Provisions.

Connection to City water supply requires backflow protection to be approved by the Engineer.

The location, alignment, and depth of existing underground utilities are taken from public records and no responsibility is assumed for the accuracy thereof. Attention is directed to the provisions in Section 6-19 of the CSSS. The Contractor shall insure that utility services to customers in the project area are maintained.

The cost of relocating existing overhead and/or underground utilities not specified on these Special Provisions to be relocated, but are relocated or cut and reconnected at the Contractor's choice, shall be borne by the Contractor.

1.22 Coordination of Work

The Contractor shall cooperate and coordinate with the residents and business owners adjacent to each well site throughout the course of construction and shall minimize impacts to the residents and business owners.

1.23 Maintaining Water, Sewer, and Drainage Flows

The Contractor shall be responsible maintaining water, sewer, and drainage flows, including emergency repairs and temporary bypasses, in accordance with Section 13-2 of the CSSS until the final completion of the project.

The Contractor shall be responsible for maintaining existing drainage flow until the final completion of the project. This includes removal of ponded water from any temporary low points created during construction.

The Contractor shall be responsible for maintaining existing sewer flows until new sewer improvements are complete and functioning. The cut sewer services shall be replaced or repaired by 5:00 PM of the same day, and shall be constructed per Standard Drawing S-260 & S-265.

No additional compensation shall be paid to the Contractor for maintenance of existing facilities; the cost of this work shall be included in the various contract items of work.

1.24 Temporary Diversion of Sewer and Drainage Flows

Should it become necessary for the Contractor to temporarily divert, bypass, or impound flows carried by existing sewer or drainage systems through or around the construction operations within the limits of this project, the Contractor shall prepare a plan of such diversion, bypass, or impoundment and submit the plan to the Engineer for approval.

The plan shall be sufficiently detailed to illustrate the concept proposed. The plan shall also provide information on the quantity of flow to be conveyed by the diversion or bypass system or the volume to be impounded. The plan shall indicate the number, size and configuration of any channel, and the size and configuration of any impoundment basin to be used.

Bypass pumping shall consist of furnishing, installing, and maintaining all power, primary and standby pumps, appurtenances and bypass piping required to maintain existing flows and services. The bypass pumping and/or diversion plan shall include provisions for a backup system in case of failure of the primary bypass system. The plan for temporary diversion or bypassing of existing sewer or drainage flows shall be submitted to the Engineer a minimum of ten (10) working days prior to the start of work on any temporary system. The Contractor shall not begin work on temporary diversion, bypass, or impoundment system until an approved plan is on file with the Engineer.

Bypass pumping shall be done in such a manner as not to damage private or public property, create a nuisance or public menace, and shall be subject to the City's noise ordinance. The pumped sewage shall be in an enclosed hose or pipe that is adequately protected from traffic, and shall be redirected into a sanitary sewer system. Dumping or free flow of sewage on private property, gutters, streets, sidewalks, or into storm sewers is prohibited. The Contractor shall be liable for all cleanup, damages, and resultant fines in the event of a spill. After the work is completed, flow shall be returned to the rehabilitated sewer.

The Contractor shall take all necessary precautions including monitoring of bypass pumping to insure that no private residences or properties are subjected to a sewage backup or spill.

The Contractor shall pump out or otherwise positively drain all locations where the building sewer is disconnected from the sewer main for more than one day. More frequent pumping shall be used in locations where wastewater flows exceed the capacity of temporary storage provided by the Contractor. The Contractor shall provide a barrier between the disconnected sewer service and the main sewer which prevents sewage from flowing into or against the sewer main.

No additional compensation will be paid to the Contractor for temporary diversion, bypassing, or impoundment of existing sewer or drainage flows. The cost of such work shall be included in the various contract items of work.

1.25 Work Performed by City Crews

The Contractor is advised that the City retains the option of performing with City crews all or a portion of any work involved in relocating, repairing, or otherwise restoring existing sewer, water, and drainage systems and services to developed properties within the limits of the project that may be in conflict with the proposed project improvements. Any such work performed by City forces shall be at the discretion and convenience of the City. All work performed and materials provided by the City shall be paid for by the Contractor or removed from this contract at no additional cost to the City.

1.26 Existing Site Conditions

Bidders are directed to Section 2-4 of the CSSS which require Bidders to examine the project sites.

1.27 Handling and Removal of Hazardous or Contaminated Materials

In the event hazardous or contaminated materials are encountered at the site for which separate handling or removal provisions have not been made in these Special Provisions, the Contractor shall stop work on that item, contact the Engineer and schedule his operations to work elsewhere on the site, if possible. The City shall be responsible for handling and removal of hazardous material or may request that the Contractor be made available, through contract change order, to provide additional services as needed for the completion of the work. Additional services may consist of retaining a Subcontractor who possesses a California license for hazardous substance removal and remedial actions.

Hazardous or contaminated materials may only be removed and disposed of from the project site in accordance with the following provisions:

1. All work is to be completed in accordance with the following regulations and requirements:
    a. Chapter 6.5, Division 20, California Health and Safety Code.
    b. California Administration Code, Title 22, relating to Handling, Storage, and Treatment of Hazardous Materials.
    c. City of Sacramento Building Code and the Uniform Building Code, 1994 edition.
2. Coordination shall be made with the County of Sacramento Environmental Management Department, Hazardous Materials Division, and the necessary applications shall be filed.
3. All hazardous materials shall be disposed of at an approved disposal site and shall only be hauled by a current California registered hazardous waste hauler using correct manifesting procedures and vehicles displaying a current Certificate of Compliance. The Contractor shall identify by name and address the site where toxic substances shall be disposed of. No payment for removal and disposal services shall be made without a valid certificate from the approved disposal site that the material was delivered.

None of the aforementioned provisions shall be construed to relieve the Contractor from the Contractor's responsibility for the health and safety of all persons (including employees) and from the protection of property during the performance of the work. This requirement shall be applied continuously and not be limited to normal working hours.

1.28 Public Notification of Work

The Contractor shall notify property owners and/or tenants adjacent to the project limits in writing two (2) working days in advance of beginning work. The notice shall be approved by the Engineer and shall describe the work to be performed, the anticipated duration of construction and the name and telephone number of the Contractor's representative that can be reached 24 hours a day, seven (7) days a week. A sample notification letter is provided in Attachment D.

1.29 Maintenance of Traffic, Public Safety, and Convenience

The Contractor's attention is directed to Sections 6-6 through 6-11, 7-4, and 16-3 of the CSSS.

Spillage resulting from hauling operations along or across any public traveled way shall be removed immediately by the Contractor at his expense. Water or dust palliative shall be applied if ordered by the Engineer for the alleviation or prevention of dust nuisance.

The Contractor shall ensure that utility services to customers in the project are maintained.

The Contractor shall be required to establish traffic scheduling and control measures acceptable to the Engineer prior to starting any work. The Contractor shall submit to the Engineer for review and approval a plan showing proposed traffic control measures and/or detours for vehicles and pedestrians affected by the work. This plan shall be submitted a minimum of ten (10) working days prior to the scheduled commencement of any work by the Contractor. **The Contractor shall not be allowed to begin work until an approved plan is on file with the Engineer.** In addition, the approved plan shall be kept on hand at the project site at all times while work is in progress. **All advance warning and traffic delineation shall conform to the provisions of Section 6-10 of the CSSS.**

The Contractor’s traffic control plan shall include location of proposed work area, locations of areas where the public right-of-way shall be closed or obstructed, any proposed phases of traffic control, and the time period of when traffic control shall be in effect. The traffic control plan shall also include name and business address of Contractor and a statement that the Contractor shall comply with City’s noise ordinance.

The Contractor shall be solely and completely responsible for furnishing, installing, and maintaining all warning signs and devices necessary to safeguard the general public and the work, and to provide for the safe and proper routing of all vehicular and pedestrian traffic during the performance of the work. The requirement shall apply continuously and shall not be limited to normal working hours.

The Contractor shall perform the following requirements included in the City ordinance Chapter 12.20, with this contract:

1. The Contractor shall not cause public rights-of-way, public property, or public easement to be covered with construction related trash, debris, garbage, waste material or soil. Areas affected by the construction, must be cleaned to the satisfaction of the Engineer prior to re-opening to the public.
2. Trench plates shall not be utilized for more than three (3) calendar days in one location and temporary surfacing shall not be utilized for more than five (5) calendar days in one location without prior written approval of the Engineer.
3. The Contractor shall provide access to all existing driveways at all times except when excavation is in progress, when forms are in place, when concrete or asphalt is being placed or unless other arrangements are made with the property owner. The Contractor shall take precautions so as not to entrap vehicles on private property during the progress of the work. Driveways may be closed only during normal working hours and only after giving property owners a minimum of twenty-four (24) hours notice in advance of the closure. Access for emergency vehicles shall be available on all streets within the construction area at all times.
4. Rear access to buildings and existing parking areas behind buildings shall be maintained. If arrangements have been made with property owners, the Contractor

may close such access for a limited time. Contractor shall give property owners forty-eight (48) hours notice in advance of the closure.

5. Provide for pedestrian traffic at all times except where closures are approved in advance by the Engineer.
6. At least one (1) lane of traffic shall be maintained at all times in the street. All work within public streets and/or roadway right-of-way shall be done in an expeditious manner so as to cause as little inconvenience to the traveling public as possible. Skid - resistant steel plates or other approved methods shall be used to cover all open excavations in the roadway during non-working hours for the entire project.
7. For work done before 7:00 A.M. or after 6:00 P.M., or during all daylight hours between 6:00 P.M. Friday to 7:00 A.M. Monday, the street or alley may be closed provided proper detours are provided and only if arrangements have been made with the property owners in advance and approved by the Engineer. A minimum of five (5) working days notice shall be given to property owners in advance of closure.
8. At night and at other times when work is not in progress, the entire roadway and alley shall be open to the public for pedestrian and vehicular traffic.

All signs and street marking damage caused by or related to the project shall be replaced in kind by the Contractor. In the case of partial damage to lane stripes and traffic lettering the whole stripe or marking in its entirety shall be replaced. Temporary markings and striping shall be installed within 72 hours (three working days) of damage.

Prior to commencing work and/or closing the street or alley, Contractor shall contact the following City Divisions and agencies:

1. Police Communication Center one (1) working day prior to closure by calling (916) 277-1750, or fax at (916) 277-1772.
2. Fire Department Communications Center one (1) working day prior to closure by calling (916) 228-3035 or fax at (916) 228-3082.
3. City Traffic Engineering Services five (5) working days prior to closure by calling (916) 808-5307.
4. City Solid Waste Division five (5) working days prior to closure by calling (916) 808-4952 or fax at (916) 808-4999. The Contractor shall also coordinate with the property owners all relocations of trash receptacles necessary to maintain garbage collection.
5. Street Parking five (5) working days prior to closure by calling (916) 808-5579 or fax at (916) 808-7501.
6. Regional Transit five (5) working days prior to closure by calling Lynn Cain at (916) 321-5375 or fax at (916) 557-4541.

At a minimum, the fax shall include the following information:

- Project name and number
- Contractor’s name and a 24-hour phone number
- City of Sacramento’s project manager’s name
- City Inspector name and phone number
- Limits of street closure, with street names

- Duration of street closure

1.30 Removal of Street Parking

In locations where the Contractor's operations require removal of on-street parking, such removal shall be in accordance with Section 6-18 of the CSSS. Failure to comply with this Section shall not prevent the City from towing vehicles parked in the proposed work area.

1.31 Project Closeout

When the project is completed in accordance with these Special Provisions, the Contractor shall notify the Engineer of the completion of the project at which time the City shall prepare a list of deficient work items, or punch list, and after all punch list items have been completed to the satisfaction of the Engineer, a completion report shall be prepared in accordance with Section 8-4 of the CSSS.

1.32 Payment

Full compensation for furnishing all labor, materials, tools, equipment and incidentals and for doing all work involved in performing and complying with these General Requirements shall be considered as included in the prices paid for in the various contract bid items the Contractor deems appropriate and no additional compensation shall be allowed.

**** End of Section ****

SECTION 2: TECHNICAL SPECIFICATIONS - Well Casing Rehabilitation

2.01 Pre-Mobilization Site Video

The Contractor shall document aboveground site conditions before mobilizing to each site in accordance with Section 11 of the CSSS. The documentation shall be comprehensive and include but not be limited to pavement, landscaping, fencing, buildings, piping, other structures, and pumping system controls. A DVD containing the site video shall be provided to the Engineer no less than 48 hours before mobilization to the site.

2.02 Mobilization, Site Setup, Demobilization, and Site Clean-up

The Contractor shall deliver to and remove from the site all workmen, materials and equipment required to successfully complete the project. The Contractor shall also prepare the site for performance of the project work. Site preparations may include, but are not necessarily limited to, addition of work area fencing, removal and replacement of building roofs, protection of existing facilities and equipment, construction of wastewater discharge piping, and placement of equipment.

The Contractor is responsible for site security and safety from the project start date until site cleanup and restoration is completed. A portable toilet and sanitary facilities for project workers shall be provided by the Contractor. This task includes per diem and other costs that may not be shown as line items on the bid schedule.

All solid waste generated and site alterations performed by the Contractor during the project shall be addressed by the Contractor so that the site is returned to its pre-project state. Wastes, including trash, unused chemicals and solids removed from the well, shall be disposed of properly. Documentation of proper waste disposal must be provided to the Engineer and the City before this task is considered complete.

2.03 Pre-Cleaning Test Pumping

Test pumping may not be allowed during or immediately after rain events. The Contractor shall seek written approval from the Engineer prior to the commencement of any test pumping.

Test pumping shall be performed to establish the hydraulic performance of the well and provide data for additional analysis by the Engineer. The Contractor shall provide a test pump appropriate for determining the maximum sustainable pumping rate for the well. The pump intake shall be set approximately 10-feet above the top of the shallowest screened interval. All water level data recorded during the testing shall be provided to the Engineer within 48 hours of test completion. The following procedure shall be performed:

Step 1: The pumping rate shall be adjusted until a rate is found that stresses the well near its maximum sustainable rate. During the adjustment process, the pumping rates and resulting water levels shall be monitored and recorded. Once the pump has been adjusted to near the maximum sustainable pumping rate, the well shall be pumped for one to two hours with the pumping water level monitored and recorded every five (5) minutes. The pumping water level shall not be allowed to fall so low that the pump cavitates. If pump cavitation occurs, the pumping rate shall be reduced to eliminate cavitation. The well shall be pumped at the

adjusted rate for a minimum of one (1) hour with the pumping water level monitored and recorded every five (5) minutes.

Step 2: A step-discharge test shall be performed on the well. The test shall not begin until the non-pumping water level in the well has stabilized near the level observed before Step 1 was performed. The well shall be pumped in four (4) steps at successively higher rates. The rates shall be approved by the Engineer before the test begins. The range of these pumping rates may vary from 50% to 100% of the estimated maximum sustainable pumping rate of the well determined in Step 1. The pumping water level shall be monitored and recorded frequently during the test. The recording intervals shall be approved by the Engineer before the test begins. Each step shall continue until 1) a straight line water level trend with time is established and 2) the Engineer agrees that it is appropriate to progress to the next discharge rate. It is anticipated that each step shall not last more than two hours.

2.04 Pre-Cleaning Spinner Logging

A spinner log shall be conducted in the presence of the Engineer to establish flow contribution along the screened interval(s). A test pump shall be used. The target pumping rate shall be based upon the results of the pre-cleaning test pumping. Unless a change is approved by the Engineer, both the pump intake and the bottom of any conduit used to guide the spinner log tool past the pump shall be located at least 100-feet below the static water level and no deeper than ten (10) feet above the top of the shallowest screened interval. If these two depth criteria conflict, the Engineer shall be consulted in order to determine the depth setting. The well shall be pumped for at least 30 minutes before the spinner logging is performed. The depth to water in the well shall be measured no less frequently than every 1) five minutes during this initial 30 minute period and 2) 15 minutes during the spinner logging. A Rossum sand tester shall be used to establish the sand content of the discharge. A report on the spinner logging and the sand testing results shall be provided to the Engineer within 48 hours of performing the work.

2.05 Traffic Control

See General Requirements, Section 1.27, “Maintenance of Traffic, Public Safety, and Convenience”.

2.06 Brushing and Sediment Removal

The removal of material in the well shall be accomplished by brushing and pumping (or airlifting). Any oil floating on the water surface shall be removed before the work begins. The brushing and sediment removal shall be performed in a single trip down the well. The following procedure shall be performed:

Step 1: The well screen and casing shall be brushed to remove encrusting and biological material attached to the inside of the well. The brushing shall be performed in a manner that achieves maximum contact with the louvers and perforations; however, care shall be taken not to damage the aging screen and casing. **Nylon, instead of wire brushes shall be used on all wire-wrapped screens.** Simultaneous with the brushing, water shall be removed by pumping or airlifting. The rate of brushing shall not exceed 40-feet per hour below the static water level, and brushing shall progress from the shallowest to deepest portions of the well. The rate of pumping or airlifting shall be no less than 200 gallons per minute.

Step 2: Once the brushing is complete, sediment accumulated in the bottom of the well shall be removed by pumping or airlifting. The sediment removal process shall continue until the discharge is visibly clear. The discharge from Steps 1 and 2 shall be contained in a tank until released as wastewater in accordance with these specifications (Section 1.17, "Wastewater Discharge and Solids Disposal"). These same general requirements apply to solids generated during the work.

2.07 Well Casing Video Surveys

Detailed video surveys shall be performed in the presence of the Engineer. A video survey shall be conducted upon mobilization to each site before any equipment is placed in the well. Videos shall also be taken after brushing (Section 2.06, "Brushing and Sediment Removal") and after chemical cleaning (Section 2.12, "Chemical Cleaning"), or as requested by the Engineer. The video logging shall be in color, include down-hole viewing and side-scan viewing (with 360-degree capability), and extend to the total well depth. Potable water shall be added to the well at a slow rate (approximately 5 gallons per minute) for at least 8 hours before the video logging in order to reduce suspended sediment and improve viewing conditions. The log shall methodically inspect the casing and screened interval(s) in order to assess the current well condition and identify any damage. A downhole view shall be maintained while descending through the well with use of sidescan views as necessary to inspect areas for potential casing or screen damage until the bottom of the well is reached. A sidescan view with slow continuous rotation shall be maintained while ascending **at a rate no greater than 0.1 feet per second** through the well with stops as necessary to inspect areas for potential casing or screen damage until the top of the well is reached (video to continue above the water level). The Contractor shall provide two (2) copies of the video log on DVD to the Engineer within 48 hours of completing the video and before subsequent tasks are performed. Each DVD shall be labelled with the date the video was taken and the well site number.

2.08 Additional Brushing and Sediment Removal

Based upon the results of the video logging performed after the brushing and sediment removal, additional brushing and sediment removal may be required. The need for and extent of this additional work shall be determined through consultation with the Engineer.

2.09 Screen and Casing Repair

Based upon the video logging results and as necessary and appropriate, the Contractor shall repair damage discovered during the video survey. This work shall be performed by the Contractor after consultation with the Engineer; however, it is anticipated that the work shall entail swaging into place a mild steel liner with a rubber sleeve and video confirmation of the work. Subsequent tasks shall not be performed until a decision is made as to whether well repair is required.

2.10 Agitating the Near-Well Environment

The near-well environment shall be agitated to improve the efficiency of subsequent mechanical and chemical treatment steps. The following procedure shall be performed:

Step 1: Encrusting and biological material present outside the well in the gravel pack and aquifer material located close to the well shall be loosened by use of hydraulic/compressive or acoustic

energy tools. **No explosives shall be used in this work.** The work shall be performed along the screened interval(s). The number of locations along the screened interval(s) at which the work is performed may depend upon the method used. The plans for this work shall be finalized in consultation with the Engineer.

Step 2: Once the agitation is complete, sediment accumulated in the bottom of the well shall be removed by pumping or airlifting. The sediment removal process shall continue until the discharge is visibly clear. The discharge shall be contained in a tank until released as wastewater in accordance with these specifications (General Requirements, Section 1.17, "Wastewater Discharge and Solids Disposal"). These same general requirements apply to solids generated during the work.

2.11 Mechanical Cleaning

Mechanical cleaning of each screened interval shall be accomplished by injecting, swabbing and pumping (or airlifting). The swabbing tool (double surge block) shall be sized to allow approximately one-inch of clearance between the tool (surge block circumference) and the screen. (Note that mechanical cleaning may be performed after chemical cleaning depending upon the condition of the well screen as determined from the post-brushing video survey. This potential change in the order of tasks shall be requested by the Engineer as necessary.)

The following procedure shall be performed:

Step 1: An NSF-approved surfactant and biodispersant shall be injected during the swabbing to enhance mobilization of materials clogging the well screen and near well environment. The chemical solution shall be at a concentration consistent with manufacturer specifications and of a volume generally equal to 1.5 times the standing well volume. For situations where the screened length is a relatively short portion of the well depth, the solution volume shall be reduced. Volumes to be used are specified below for each well.

Well No.	Chemical Volume (gal)
94	2,700
107	4,300
120	5,500
122	5,500
126	6,300
129	5,000
133	10,500
138	7,100

Only potable water shall be used to prepare the chemical solution. This process shall be performed on the deepest part of the screened interval first and then progress to the shallowest portion of the screened interval in 10-foot sections. Each 10-foot section shall be swabbed for approximately 20 minutes at a slow rate that shall not damage the well.

Step 2: Once chemical addition is complete, water shall be removed by pumping or airlifting at a rate of no less than 200 gallons per minute simultaneous with swabbing. The swabbing shall begin slowly and progress to a faster action only when doing so shall not damage the well. The swabbing shall progress in 10-foot sections from the shallowest to deepest portions of the well. The amount of settleable solids in the discharge shall be evaluated as the swabbing

progresses. The process shall continue for at least 60-minutes per 10-foot section. The process shall continue for each screened interval until the discharge is visibly clear and contains less than 10 parts per million settleable solids as estimated using an Imhoff cone (one tenth of the 0.1 milliliter division on the cone as per California Groundwater Association Article 230).

Step 3: Once the swabbing is complete, sediment accumulated in the bottom of the well shall be removed by pumping or airlifting. The sediment removal process shall continue until the discharge is visibly clear.

Step 4: The discharge from all mechanical cleaning work shall be contained in a tank until released as wastewater in accordance with these Technical Specifications (General Requirements, Section 1.17, "Wastewater Discharge and Solids Disposal"). These same general requirements apply to solids generated during the work.

2.12 Chemical Cleaning

Chemical cleaning of each screened interval shall be accomplished by injecting, swabbing and pumping (or airlifting). The treatment solution shall consist of five percent (5%) hydrochloric acid with an inhibitor and a biodispersant. Any on-site preparation of chemical solutions shall be conducted such that no vapors migrate off-site. Due to the close proximity of the public at each site an exclusion zone to be implemented in the field for each site shall be identified in the health and safety plan submitted by the Contractor.

Only potable water shall be used to prepare the treatment solution. The Contractor may choose methods for obtaining water at a higher rate than available on-site. Prior to water being transported to the site the Contractor must provide certification to the Engineer that the tanks used have been thoroughly cleaned prior to use or have only previously been used to transport potable water. All chemicals used shall be NSF-approved. The following procedure shall be performed:

Step 1: A chemical solution with a volume generally equal to 1.5 times the standing well volume shall be added to the well. For situations where the screened length is a relatively short portion of the well depth, the solution volume shall be reduced. Volumes to be used are specified in the previous table shown in Section 2.11, "Mechanical Cleaning". The addition shall be accomplished by injecting through a double surge block and swabbing the chemical solution into the well screen. **Because a significant amount of calcium carbonate is present in each well, the acid solution shall be injected slowly in order to avoid a violent chemical reaction.** This process shall be performed on the deepest part of the screened interval first and then progress to the shallowest portion of the screened interval in 10-foot sections. Each 10-foot screen section shall be swabbed for at least 20 minutes at a slow rate that shall not damage the well.

Step 2: Once the chemical addition is complete, the pH shall be 1) measured and compared to the pH before the acid was injected and 2) monitored hourly until the pH stabilizes. If the pH rises above 3.0 at any point in the pH monitoring process, an additional volume of chemical solution shall be added using the above-described process and the pH monitoring begun again. Once the pH has stabilized at or below 3.0, the well shall be left to stand until the next morning.

Step 3: After the well has been allowed to stand overnight, swabbing and pumping shall be performed for each screened interval as described above (Section 2.12, "Chemical Cleaning", Step 2). The amount of settleable solids and pH in the discharge shall be evaluated as the swabbing progresses. The process shall continue for at least 60-minutes per 10-foot section. The process shall continue for each screened interval until the discharge is visibly clear,

contains less than 10 parts per million settleable solids as estimated using an Imhoff cone (one tenth of the 0.1 milliliter division on the cone as per California Groundwater Association Article 230) and the pH has returned to the pretreatment level.

Step 4: Once the cleaning is complete, sediment accumulated in the bottom of the well shall be removed by pumping or airlifting. The sediment removal process shall continue until the discharge is visibly clear.

Step 5: The discharge from all chemical cleaning work shall be contained in a tank until released as wastewater in accordance with these technical specifications (General Requirements, Section 1.17, "Wastewater Discharge and Solids Disposal"). These same general requirements apply to solids generated during the work.

2.13 Additional Mechanical and Chemical Cleaning

Based upon the results of the post-cleaning spinner logging, additional mechanical and chemical cleaning may be required. The need and extent of this additional work shall be determined through consultation with the Engineer.

2.14 Post-Cleaning Spinner Logging

A spinner log shall be conducted in the presence of the Engineer to establish flow contribution along the screened interval(s) after mechanical and chemical cleanings are performed. A test pump shall be used. The target pumping rate shall match that used for the pre-cleaning spinner logging to within 10 gallons per minute. Unless a change is approved by the Engineer, both the pump intake and the bottom of any conduit used to guide the spinner log tool past the pump shall be located at least 100-feet below the static water level and no deeper than 10-feet above the top of the shallowest screened interval. If these two depth criteria conflict, the Engineer shall be consulted in order to determine the depth setting. The well shall be pumped for at least 30-minutes before the spinner logging is performed. The depth to water in the well shall be measured no less frequently than every 1) five (5) minutes during the initial 30-minute period and 2) fifteen (15) minutes during the spinner logging. A Rossum sand tester shall be used to establish the sand content of the discharge. A report on the spinner logging and the sand testing results shall be provided to the Engineer within 48-hours of performing the work and before subsequent tasks are performed.

2.15 Deviation Survey

A deviation survey shall be performed to evaluate the extent to which the well may be out of plumb. A report on the well drift and alignment shall be provided to the Engineer within 48-hours of performing the survey.

2.16 Post-Cleaning Test Pumping

Test pumping may not be allowed during or immediately after rain events. The Contractor shall seek written approval from the Engineer prior to the commencement of any test pumping.

Test pumping shall be performed to establish the hydraulic performance of the well and provide data for additional analysis by the Engineer. The Contractor shall provide a test pump appropriate for determining the maximum sustainable pumping rate for the well. The pump intake shall be set

approximately 10-feet above the top of the shallowest screened interval. All water level data recorded during the testing shall be provided to the Engineer within 48-hours of test completion. The following procedure shall be performed:

Step 1: The pumping rate shall be adjusted until a rate is found that stresses the well near its maximum sustainable rate. During the adjustment process, the pumping rates and resulting water levels shall be monitored and recorded. Once the pump has been adjusted to near the maximum sustainable pumping rate, the well shall be pumped for one to two hours with the pumping water level monitored and recorded every five (5) minutes. The pumping water level shall not be allowed to fall so low that the pump cavitates. If pump cavitation occurs, the pumping rate shall be reduced to eliminate cavitation. The well shall be pumped at the adjusted rate for a minimum of one (1) hour with the pumping water level monitored and recorded every five (5) minutes.

Step 2: A step-discharge test shall be performed on the well. The test shall not begin until the non-pumping water level in the well has stabilized near the level observed before Step 1 was performed. The well shall be pumped in four (4) steps at successively higher rates. The rates shall be approved by the Engineer before the test begins. The range of these pumping rates may vary from 50% to 100% of the estimated maximum sustainable pumping rate of the well determined in Step 1. The pumping water level shall be monitored and recorded frequently during the test. The recording intervals shall be approved by the Engineer before the test begins. Each step shall continue until 1) a straight line water level trend with time is established and 2) the Engineer agrees that it is appropriate to progress to the next discharge rate. It is anticipated that each step shall not last more than two (2) hours.

Step 3: A constant rate test shall be performed on the well. If the test is performed immediately after the step-discharge test, the pump shall remain running upon completion of the step-discharge test. If the test is performed after step-discharge test pumping has been discontinued, the test pumping shall not begin until the following two conditions have been met: 1) at least twelve (12) hours have passed since step-discharge test pumping ceased and 2) the non-pumping water level in the well has stabilized near the level observed before Step 2. The Contractor shall discuss with the Engineer any necessary adjustments to the pumping rate at the beginning of the test. The test shall be run for 24 hours, and the pumping water level shall be monitored and recorded frequently during the test. The recording intervals shall be approved by the Engineer before the test begins. After 24 hours, pumping shall stop and the water level in the well shall be monitored and recorded for a maximum of 24 hours. The recording intervals shall be approved by the Engineer before the pumping stops. The water level monitoring shall not stop without approval of the Engineer.

2.17 Disinfect Well

The well screen and casing shall be disinfected. Barring any uncontrollable delays (weather, supplier delay, equipment failure) installation of each new submersible pump shall commence within 48 hours of completion of well disinfection at each well.

The following procedure shall be performed:

Step 1: A pH-adjusted, slightly acidic (i.e., pH 6.0 to 7.0) chlorine solution of 100 mg/l, with a volume generally equal to four (4) times the standing well volume, shall be used. For situations where the screened length is a relatively short portion of the well depth, the solution volume shall be reduced. Any on-site preparation of chemical solutions shall be conducted such that no vapors migrate off-site. Only potable water shall be used to prepare the treatment solution. The Contractor may consider methods for obtaining water at a higher rate than available on-

site. The solution shall be added to the well by injecting through a tremie pipe or equivalent approach. This process shall start at the bottom of the well and progress to the standing water level. Each 10-foot section of screen shall be swabbed for at least twenty (20) minutes at a slow rate that shall not damage the well. The chlorine solution shall be allowed to remain in the well for at least twelve (12) hours. Volumes to be used are specified in the table below.

Well No.	Chlorine Solution Volume (gal)
94	6,700
107	11,300
120	10,900
122	10,900
126	12,600
129	9,900
133	27,800
138	18,900

Step 2: After the well has been allowed to stand the required amount of time, water shall be removed by pumping or airlifting at a rate of no less than 200 gallons per minute. Within the screened interval(s), the pumping shall be performed simultaneous with swabbing starting at the standing water level and progressing to the bottom of the well. The swabbing shall be performed at a rate that shall not damage the well and progress in 10-foot sections of the screened interval(s). Each section shall be pumped for at least sixty (60) minutes. At least five (5) times the chlorine solution volume used in Step 1 shall be removed from the well. The chlorine content in the discharge shall be evaluated as the pumping progresses, and the pumping shall continue until the discharge contains no chlorine.

Step 3: The discharge shall be contained in a tank until released as wastewater in accordance with these technical specifications (General Requirements, Section 1.17, “Wastewater Discharge and Solids Disposal”). These same general requirements apply to solids generated during the work.

2.18 Wastewater Treatment and Disposal

All wastewater shall be contained in tanks until discharged. The Contractor shall employ approaches necessary to work within site space restrictions and wastewater discharge requirements. The Contractor shall comply with the discharge requirements set by the sanitary district in the wastewater discharge permit for the project (included in General Requirements, Section 1.17, “Wastewater Discharge and Solids Disposal”, and Attachment A, “Sanitary District Wastewater Discharge Permit”, of these specifications). In general, wastewater discharge flow rates shall not exceed the following: 100-gpm for 6” diameter sewer pipe, 200-gpm for 8” diameter sewer pipe, 300-gpm for 10” diameter sewer pipe. The City shall verify Contractor compliance with the discharge requirements by collecting samples and conducting chemical analysis at its laboratory. The Contractor shall accommodate delays before discharge is allowed while the chemical analyses are performed.

2.19 Waste Solids Disposal

See General Requirements, Section 1.17, “Wastewater Discharge and Solids Disposal”, and Technical Specifications, Section 2.2, “Mobilization, Site Setup, Demobilization, and Site Clean-up”

**** End of Section ****

SECTION 3: TECHNICAL SPECIFICATIONS - General Sewer Construction

3.01 Dewatering and Infiltration Control

A determination of groundwater level has not been made for this project for sewer lateral installation work. In accordance with Sections 16 and 26-2 of the Standard Specifications, Contractor shall be responsible for the control, removal, and disposal of any groundwater encountered in the course of excavating or backfilling trenches, placing pipe, or constructing any other improvement associated with this project.

No separate payment will be made for dewatering and infiltration control. All costs should be included in the individual items requiring dewatering.

3.02 Trench Excavation and Backfill

Trench excavation and backfill in all streets shall meet the applicable requirements of Sections 10, 14 and 26 of the Standard Specifications and these specifications. If specified in these Special Provisions, pipe shall be backfilled using Controlled Density Fill (CDF), in accordance with Section 10-16 of the Standard Specifications, and as directed by the Engineer. Slurry cement backfill will not be allowed.

When the Engineer approves shallow placement of drain inlet leads requiring protective measures, all work associated with protective measures shall be considered as extra and paid per Section 8 of the Standard Specifications.

3.03 Pavement Cutting and Surface Restoration

Pavement cutting and surface restoration shall conform to the applicable provisions of Section 26-11 of the Standard Specifications and these Special Provisions. The Contractor shall restore surfaces in kind (using the same surface material as existing) unless otherwise noted on the Plans or within these Special Provisions. Payment for restoring the surface in kind within any excavation shall be included in the associated item of work unless otherwise stated in these Special Provisions.

If trench crosses sidewalk, curb, and gutter, Contractor shall replace entire sidewalk panel to nearest control or expansion joint on both sides of trench wall. Extent of curb and gutter replacement shall coincide with sidewalk panel being replaced. Curb and gutter reconstruction shall match existing geometry and, at the Engineer's discretion, extend up to five (5) feet in length on either side. Pavement cutting shall be perpendicular and parallel to the centerline of the road when practicable.

3.04 Temporary Paving

Temporary paving shall be in accordance with Section 14-4 of the Standard Specifications.

3.05 Tree Preservation Requirements

Trees within the project area shall be protected by the following means:

A. The contractor shall hire an International Society of Arboriculture (ISA) certified arborist to do any required pruning for equipment clearance. The contractor shall contact the City Arborist (Dan Pskowski, 916-768-8604) for root inspection(s) for trenching activities within the dripline(s) of the trees.

B. If during excavation for the project, tree roots greater than two (2) inches in diameter are encountered, work shall stop immediately until the project arborist can perform an on-site inspection. All roots shall be cut clean and the tree affected may require supplemental irrigation/fertilization and pruning as a result of the root cutting. The project sponsor will be responsible for any costs incurred. Depending upon the amount of roots encountered and the time of year, wet burlap may be required along the sides of the trench.

C. The contractor shall be held liable for any damage to existing trees, i.e. trunk wounds, broken limbs, pouring of any deleterious materials, or concrete washout under the dripline of the trees. Damages will be assessed using the *A Guide to Plant Appraisal*, *8th Edition*, published by the International Society of Arboriculture. An appraisal report shall be submitted for review by the City Arborist.

D. Tree protection methods noted above shall be identified on all construction plans for the project.

3.06 Archeological Resources Discovery

A. Discovery of Cultural Resources

1. In the event that any prehistoric subsurface archaeological features or deposits, including locally darkened soil ("midden"), that could conceal cultural deposits, animal bone, obsidian and/or mortars are discovered during construction-related earth-moving activities, all work within 150-feet of the resources shall be halted, and the Contractor and City shall consult with a qualified archaeologist who are certified by the Society of Professional Archeologists (SOPA) and/or meet the federal standards as stated in the Code of Federal Regulations (36 CFR 61) to assess the significance of the find. Archaeological test excavations shall be conducted by a qualified archaeologist to aid in determining the nature and integrity of the find. If the find is determined to be significant by the qualified archaeologist, representatives of the City and the qualified archaeologist shall coordinate to determine the appropriate course of action. All significant cultural materials recovered shall be subject to scientific analysis and professional museum curation. In addition, a report shall be prepared by the qualified archaeologist according to current professional standards. Work shall be re-started only upon a notice to proceed from the Engineer.

B. Discovery of Native American Site

1. If a Native American site is discovered during project construction, the Contractor shall give immediate notice to the Engineer, and the evaluation process shall include consultation with the appropriate Native American representatives. If Native American archaeological, ethnographic, or spiritual resources are involved, all identification and treatment shall be conducted by qualified archaeologists, who are certified by the Society of Professional Archeologists (SOPA) and/or meet the federal standards as stated in the Code of Federal Regulations (36 CFR 61), and Native American representatives, who are approved by the local Native American community as scholars of the cultural traditions.

2. In the event that no such Native American is available, persons who represent tribal governments and/or organizations in the locale in which resources could be affected shall be consulted. If historic archeological sites are involved, all identified treatment is to be carried out by qualified historical archaeologists.

C. Discovery of Human Remains

1. If a human bone or bone of unknown origin is found during construction, the Contractor shall give immediate notice to the Engineer, all work shall stop in the vicinity of the find, and the County Coroner shall be contacted immediately. If the remains are determined to be Native American, the Coroner shall notify the Native American Heritage Commission, who shall notify the person most likely believed to be a descendant. The most likely descendant shall work with the Engineer and Contractor to develop a program for re-internment of the human remains and any associated artifacts. No additional work is to take place within the immediate vicinity of the find until the identified appropriate actions have taken place.

3.07 Lateral Construction

All sewer services shall be 6-inch acrylonitrile-butadiene-styrene (ABS) and constructed as shown on the ABS Sewer Service Detail S-260, with the exception of the service for Well 138, which shall be 6-inch ductile iron pipe, and County sewer services, which shall be constructed as shown in the Drawings. **PVC pipe manufactured by JM Pipe or PW Eagle Pipe will not be allowed.** All pipe shall have elastomeric gasket joints providing a water tight seal.

Services shall be connected to sewer mains using tees or insert-a-tees when the sewer main is 8-inches in diameter or greater. When connecting to a 6-inch sewer main, insert-a-tees will not be allowed. Cast iron fittings will not be allowed. Under no circumstances shall grouted connections be acceptable.

New services shall be installed perpendicular to the main. The layout of services shown on the Plans is diagrammatic only. Final layout of new services and cleanouts will be determined by the Engineer as follows: After exposure of service connection at main by Contractor, Engineer will trace layout of existing service line and proposed location of cleanout. The Contractor will coordinate this work with the Engineer a minimum of two (2) working days in advance of placing new services.

When connecting a service to an existing manhole, the service shall be installed above the base of the manhole such that no alteration of the manhole base is required, unless otherwise approved by the Engineer. If the service enters a manhole near the invert of the MH flow channel, the service shall be channelized in the MH bench with vitrified clay pipe, shaped to provide a smooth transition into the main flow channel. If the service enters a manhole more than 1.5-feet above the spring-line of the pipe forming the manhole channel, an inside drop connection shall be constructed from the incoming service to one (1) foot above the spring-line of the pipe forming the channel at no additional cost to the City.

When sewer pipe is laid in trenches where the top of the pipe bell is less than eighteen inches (18”) below sub-grade of the street, the pipe shall be covered with a protective covering. The concrete used in making the covering shall conform to Portland Cement concrete Class A, as denoted in these Specifications. As an alternate, C900 or ductile iron pipe with controlled density fill may be used, as approved by the Engineer.

3.08 Manhole Construction

Manhole bench shall slope upwards from the spring-line of the pipe to the projected level of the crown of the pipe at the manhole wall or twelve (12) inches above the spring-line, whichever is less. All holes, cracks, and seams shall be grouted flush using non-shrink grout with the manhole interior. Non-shrink grout shall be “Metallic Grouting Compound” by Burke, “Embeco” by Master Builders, “Ferrolith-G” by Sonneborn-Desoto, or approved equal. All internal surfaces shall have a smooth finish.

External joint of each barrel section and of the barrel/cone connection shall be sealed with an external rubber sealing sleeve as manufactured by Infi-Shield Inc. or equal. The seal shall be made of neoprene and EPDM rubber and have a minimum thickness of 60-mils. Material shall conform to specifications of ASTM C923, ASTM C443, and ASTM F477. Rubber seal shall be attached to manhole using a non-hardening butyl rubber mastic applied to the top and bottom of sleeve in accordance with manufacturer’s instructions. Seal shall overlap joint a minimum of 3-inches and shall be continuous around the perimeter of the barrel section and overlapped 6-inches minimum.

All sanitary sewer manholes shall be tested and shall meet the requirements of ASTM C1244 prior to acceptance. Manholes shall be tested prior to backfill. If the manhole fails the test at this time, the manhole shall be repaired by the Contractor and retested. This procedure shall be repeated until the manhole passes the required test. The Engineer may also require the manholes to be tested using this method after backfilling if the Engineer has reason to suspect that the manhole has been disturbed during the backfilling operation, or at other times during construction of the improvements being installed as part of the development.

In order to prepare the manhole for this test, all lift holes shall be plugged and all pipes entering the manhole shall be temporarily plugged, taking care to securely brace the pipes and plugs to prevent them from being drawn in to the manhole.

The test procedure shall be as follows:

1. The test head shall be placed at the top of the manhole in accordance with the manufacturer's recommendations.
2. A vacuum of ten (10) inches of mercury shall be drawn on the manhole, the valve on the vacuum line of the test head closed, and the vacuum pump shut off. The time shall be measured for the vacuum to drop to nine (9) inches of mercury.
3. The manhole shall pass if the time for the vacuum to drop from ten (10) inches of mercury meets or exceeds the values indicated in Table 1 of ASTM C1244.

The vacuum gauge used for this test shall be supplied by the Contractor, and shall have maximum scale division of 0.1-psi, and shall have an accuracy of 0.04-psi. Accuracy and calibration of the gauge shall be certified by a reliable testing firm at six month intervals, or when requested by the Engineer. In addition, the Engineer may compare the Contractor's gauge with a City owned gauge at any time. During testing, the vacuum gauge shall be located such that it is readily visible.

3.09 Payment

Full compensation for furnishing all labor, materials, tools, equipment and incidentals and for doing all work involved in performing and complying with these General Requirement items shall be considered as included in the prices paid for in the various contract bid items the Contractor deems appropriate and no additional compensation will be allowed.

**** End of Section ****

SECTION 4: TECHNICAL SPECIFICATIONS – Site Improvements

DIVISION 1 – GENERAL

SECTION 01330

SUBMITTALS

PART 1 - GENERAL

1.01 STANDARD COMPLIANCE

A. When materials or equipment must conform to the standards of organizations such as, but not limited to, the American National Standards Institute (ANSI), American Society for Testing and Materials (ASTM), National Sanitation Foundation (NSF), National Electrical Manufacturers Association (NEMA), and Underwriter's Laboratories (UL) documents showing, or proving, conformance shall be submitted.

B. If an organization uses a label or listing to indicate compliance with a particular standard, the label or listing will be acceptable evidence, unless otherwise specified in the individual sections. In lieu of the label or listing, the Contractor shall submit a certificate from an independent testing organization, which is competent to perform acceptable tests, and is approved by the City. The certificate shall state that the item has been tested in accordance with the specified organization's standard. For materials and equipment whose compliance with organizational standards or specifications is not regulated by an organization using its own listing or label as proof of compliance, a certificate of compliance from the manufacturer shall be submitted for approval. The certificate shall identify the manufacturer, the product, and the referenced standard and shall state that the manufacturer certifies that the product conforms to all requirements of the project specifications and of the referenced standards listed.

1.02 REVIEW OF CONTRACTOR'S INFORMATION

A. When review and checking for acceptance is required of any drawing or information regarding materials and equipment, the Contractor shall prepare or secure, and submit for review, five (5) copies. The Engineer, after taking appropriate action, will return two (2) marked copies to the Contractor.

   Within a reasonable time after receipt of said submittal copies, the Engineer will return the marked copies indicating one of the following four actions:

   1. If review and checking indicates no exceptions, copies will be returned marked “NO EXCEPTIONS TAKEN” and work may begin immediately on incorporating the material and equipment covered by the submittal into the work.
   2. If review and checking indicates limited corrections are required, copies will be returned marked “MAKE CORRECTIONS NOTED”. Work may begin immediately on

incorporating into the work the material and equipment covered by the corrected submittal.

3. If review and checking indicates insufficient, or incorrect data, has been submitted, copies will be returned marked “REVISE AND RESUBMIT”. No work may begin on incorporating the material and equipment covered by this submittal into the work until the submittal is revised, resubmitted, and returned marked either “NO EXCEPTIONS TAKEN” or “MAKE CORRECTIONS NOTED”.
4. If review and checking indicates the material and equipment submittal is unacceptable, copies will be returned marked “REJECTED”. No work may begin on incorporating the material and equipment covered by this submittal into the work until a new submittal is made and returned marked either “NO EXCEPTIONS TAKEN” or “MAKE CORRECTIONS NOTED”.

B. Approval of the submittal by the Engineer shall not relieve the Contractor from responsibility for any errors or omissions in such submittals nor from responsibility for complying with the requirements of this Contract.

C. If shop drawings show variations from contract requirements, Contractor shall describe such variations in writing, separate from the drawings, at time of submission. All such variations must be approved by the Engineer.

PART 2 - PRODUCTS

2.01 MANUFACTURER'S DATA

A. Submittals for each manufactured item shall be comprised of manufacturer's descriptive literature, drawings, diagrams, performance and characteristic curves, and catalog cuts. Manufacturer's name, trade name, model or catalog number, nameplate data, size, layout dimensions, capacity, project specification references, and any other additional information necessary to establish contract compliance shall be clearly indicated for each item submitted. Contractor shall identify items submitted for approval using an arrow or yellow highlighter. All submittals that fail to properly identify items will be returned to the Contractor.

2.02 SHOP DRAWINGS

A. Shop drawings shall show types, sizes, accessories, elevations, floor plans, sectional views, installation details, elementary control diagrams, and wiring diagrams. Wiring diagrams shall identify circuit terminals and shall indicate the internal wiring for each item of equipment. Drawings shall also indicate adequate clearance for operation, maintenance, and replacement of operating equipment devices. If any equipment is disapproved, the drawings shall be revised to show acceptable equipment and be resubmitted. **Contractor shall provide a hard copy of all shop drawings.**

2.03 OPERATION AND MAINTENANCE MANUAL

A. Submit an operation and maintenance manual covering the stipulated systems and equipment. Three (3) approved copies of the manual, bound in Avery D - Ring binder model number AVY79-799 or approved equal, shall be furnished to the City. **One (1) of the three copies of**

the operation and maintenance manual shall contain original documentation/manuals and not photocopies. Each binder shall be no more than 75% full. Prior to system and equipment tests, one (1) complete bound copy of the manual shall be submitted for approval. Three (3) approved copies of the manual each for this project, with all applicable test forms completed, shall be furnished to the City before completion of the contract. The following identification shall be inscribed on the cover and spine of the binders:

Operation and Maintenance Manual

Project: Well Rehabilitation Phase 3 Project

Contractor: _____

Contract No.: _____

Date: _____

The Contractor shall also provide the City with an electronic copy of each operation and maintenance manual. The electronic copies shall be in Adobe format (Portable Document Format) and shall be provided on a CD. Contractor shall use the latest version of Adobe.

B. Provide a table of contents and tab sheets to identify discrete subjects. Instruction sheets shall be legible and easily understood with large sheets and drawings folded in. Use manufacturer's original pre-printed instructions when available, do not copy these pre-printed instructions. Cross out all material which does not apply to the equipment furnished on this job.

C. The operating and maintenance instruction shall include, as a minimum, the following data for each item of mechanical and electrical equipment:

1. Name and location of the manufacturer, the manufacturer's local representative, the nearest supplier and spare parts warehouse
2. Approved submittals applicable to operation and maintenance
3. Recommended installation, adjustment, start-up, calibration, and troubleshooting procedures
4. A control sequence describing start-up, operation, and shutdown
5. Detailed description of the function of each principal component of the systems
6. Recommended lubrication and an estimate of yearly quantity needed
7. Recommended step-by-step procedures for all modes of operation
8. Complete internal and connection wiring diagrams
9. Complete printed circuit board schematic and assembly drawings
10. Recommended preventive maintenance procedures and schedule
11. Complete parts lists, by generic title and identification number, with exploded views of each assembly
12. Recommended spare parts
13. Disassembly, overhaul, and reassembly instructions
14. All completed test forms

15. ISA (International Society for Measurement and Control) S-20 forms for all instrumentation devices
16. As-built single line drawings of the entire electrical system including motor control drawings of each motor. AutoCAD files of both single line and motor control drawings on a CD

D. Contractor is not required to provide manuals for equipment supplied by the City. However, any manuals provided to the Contractor by the City shall be returned in a condition acceptable to the Engineer, or replaced at no cost to the City.

2.04 PROJECT RECORD DRAWINGS

A. The Contractor shall maintain a neatly and accurately marked set of record drawings showing the elementary control diagrams, wiring diagrams, and final locations and layout of all mechanical, electrical, and instrumentation equipment; piping and conduit; structures; and other facilities. Drawings shall be kept current weekly, with all work instructions and change orders; mechanical, electrical, and instrumentation equipment accommodations; and construction adjustment. Drawings shall be subject to the inspection of the Engineer at all times, and progress payments, or portions thereof, may be withheld if drawings are not accurate and current. Prior to acceptance of the work, the Contractor shall deliver to the Engineer two (2) sets of neatly marked record drawings, accurately showing all the information required above.

PART 3 - EXECUTION

3.01 SUBMITTAL PROCEDURE

A. At least thirty (30) days prior to the Contractors need for approval, Contractor shall forward to the Engineer all submittals required by the individual sections of the Specifications.

B. Identify all submittals by submittal number on letter of transmittal. Specification number shall be identified on the letter of transmittal. Submittals shall be numbered consecutively and resubmittals shall have a letter suffix. For example:

1. 1st Submittal: 5
2. 1st Resubmittal: 5A
3. 2nd Resubmittal: 5B, etc.

3.02 INFORMATION TO BE SUBMITTED FOR REVIEW

A. Information on items to be submitted for review is specified in the individual sections of these Specifications. Submittals for each section shall be bound together in one book. Book shall have numbered tab dividers for each item. Submittals that are related to, or affect, each other shall be forwarded simultaneously as a package to facilitate coordinated review. Uncoordinated submittals will be rejected. Do not combine unrelated materials in the same submittal. Submittals shall be arranged in the same order as they appear in the Specification Section. Items shall be highlighted and clearly marked with the same identification number as indicated on the drawings. The Contractor shall include submittal time appropriate within each

item of work on the construction schedule. The City will receive submittals prior to, or at, the preconstruction meeting.

**** End of Section ****

SECTION 01410

QUALITY CONTROL

PART 1 - GENERAL

1.01 DESCRIPTION

A. Work Included

1. Cooperate with the Engineer's selected testing agency and all others responsible for testing and inspecting the work as described herein.
2. Provide such other testing and inspecting as are specified to be furnished by the Contractor in this Section and/or elsewhere in the contract documents

B. Related Work

1. Requirements for testing may be described in various Sections of these specifications and applicable codes.
2. Where no testing requirements are described but the Engineer decides that testing is required, the Engineer may require such testing to be performed under current pertinent standards for testing. Payment for such testing will be made as described in this Section.

C. Work Not Included

1. Selection of testing laboratory: The City will select a pre-qualified independent testing laboratory.
2. Payment for specified initial testing: The City will only pay for **initial** material strength testing of items described in Paragraph 1.02.A, “Testing Description”, herein. Contractor shall be responsible to pay for all other testing.

1.02 TESTING DESCRIPTION

A. Material Strength:

1. The City will only pay for initial testing services for concrete strength and slump, soil compaction, and grout strength.
2. When initial tests indicate non-compliance with the Contract Documents, the costs of any additional tests required for determining compliance will be deducted by the City from the contract sum as reflected in the progress payments due the Contractor.

B. Operational Testing

1. All operational tests shall be paid for by the Contractor.

C. Contractor's Convenience Testing

1. Inspecting and testing performed exclusively for the Contractor's convenience, such as determining grain size or index properties of material proposed for use as import, shall be the sole responsibility of the Contractor.

2. Employment of testing laboratory shall in no way relieve Contractor of obligation to perform Work in accordance with requirements of Contract Documents.
3. The City will provide initial testing for trench/structure backfill and embankment compaction.

1.03 REFERENCES

American Society of Testing Materials (ASTM)	
ANSI/ASTM D3740	Practice for Evaluation of Agencies Engaged in Testing and/or Inspection of Soil and Rock as Used in Engineering Design and Construction.
ANSI/ASTM E329	Standard Recommended Practice for Inspection and Testing Agencies for Concrete, Steel, and Bituminous Materials as Used in Construction.

1.04 LIMITS ON TESTING LABORATORY AUTHORITY

A. Laboratory may not release, revoke, alter, or enlarge on requirements of Contract Documents.

B. Laboratory may not approve or accept any portion of the Work.

C. Laboratory may not assume any duties of Contractor.

D. Laboratory has no authority to stop Work.

1.05 CONTRACTOR RESPONSIBILITIES

A. Deliver to laboratory at designated location adequate samples of materials proposed to be used which require testing, together with proposed mix designs.

B. Cooperate with laboratory personnel, and provide access to Work and to manufacturer's facilities.

C. Provide incidental labor and facilities to provide access to work to be tested, to obtain and handle samples at the site or at source of products to be tested, to facilitate tests and inspections, and for storage and curing of test samples.

D. Notify laboratory twenty-four (24) hours prior to expected time for operations requiring inspection and testing services.

PART 2 - PRODUCTS

Not Used.

PART 3 - EXECUTION

3.01 COOPERATION WITH TESTING LABORATORY

A. Representatives of the testing laboratory shall have access to the work at all times and at all locations where the work is in progress. Provide facilities for such access to enable the laboratory to perform its functions properly.

3.02 TAKING SAMPLES

A. All specimens and samples for testing, unless otherwise provided in the Contract Documents, shall be taken by the testing personnel. All sampling equipment and personnel will be provided by the testing laboratory. All deliveries of specimens and samples to the testing laboratory will be performed by the testing laboratory.

3.03 SCHEDULES FOR TESTING

A. Establishing Schedule

1. By advance discussion with the testing laboratory selected by the City, determine the time required for the laboratory to perform its tests and to issue each of its findings.
2. Provide all required time within the construction schedule.

B. Revising Schedule

1. When changes of construction schedule are necessary during construction, coordinate all such changes with the testing laboratory as required.

**** End of Section ****

SECTION 01500

CONSTRUCTION FACILITIES AND TEMPORARY CONTROLS

PART 1 - GENERAL

1.01 DESCRIPTION

A. Requirements Included
   1. Electrical
   2. Water
   3. Sanitary Facilities
   4. Construction Aids
   5. Cleaning During Construction
   6. Project Identification
   7. Security
   8. Safety
   9. Noise Control

B. Related Requirements
   1. Section 01770, “Contract Closeout”

1.02 WATER

A. A single outdoor hose bib is available for use at each well site. Use of this water source by the Contractor shall be allowed provided it does not interfere with necessary City use. Contractor shall make additional provisions for water if necessary for construction operations and for testing. The Contractor shall be responsible for all associated costs.

1.03 SANITARY FACILITIES

A. The Contractor shall make arrangements for the maintenance of adequate toilet facilities at or near the work site and shall pay the costs thereof.

1.04 CONSTRUCTION AIDS

A. Provide and operate drainage and pumping equipment as required to maintain excavations and site free of standing water.

1.05 CLEANING DURING CONSTRUCTION

A. Control accumulation of waste materials and rubbish; periodically dispose of off-site in a location approved by the Engineer.

B. Clean interior areas prior to start of finish work, maintain areas free of dust and other contaminants during finishing operations.

1.06 TEMPORARY ELECTRICITY

A. Contractor shall provide temporary power to the worksite as required. Temporary power shall not be provided by the City or from existing facilities. All requests for exceptions to this policy shall be submitted in writing to and approved in writing by the Engineer.

1.07 REMOVAL

A. Remove temporary materials, equipment, services, and construction prior to Substantial Completion inspection.

B. Clean and repair damage caused by installation or use of temporary facilities. Remove underground installations to a depth of two (2) feet, grade site as indicated. Restore existing facilities used during construction to specified, or to original, condition.

PART 2 - PRODUCTS

Not Used.

PART 3 - EXECUTION

3.01 CONTRACTOR'S PLANT AND EQUIPMENT

A. Security

1. The Contractor shall be responsible for the security of his plant and equipment at all times. The City will not take responsibility for missing or damaged equipment, tools or personal belongings.

B. Workshop and Storage Facilities

1. The Contractor shall provide storage facilities for the protection from weather materials and supplies and shall keep the facilities clean and in proper order at all times.

C. Parking Facilities

1. Parking areas at the project location for the vehicles used by the Contractor's construction employees and his own vehicles shall be as approved by the Engineer.

3.02 GENERAL AND TRENCH SAFETY

A. The Contractor shall execute and maintain his work so as to avoid injury or damage to any person or property. All work shall be done in conformance with the State of California Division of Industrial Safety and OSHA Standards. Safety precautions, as applicable, shall include, but not be limited to, adequate fume protection; adequate illumination for underground and night operations; instructions in accident prevention for all employees; such machinery guards, walkways, scaffolds, ladders, bridges, and other safety devices, equipment and wearing

apparel as are necessary or lawfully required to prevent accidents or injuries, and the proper inspection and maintenance of all safety measures. Contractor shall have emergency phone numbers and addresses posted on the job site.

B. Trench safety shall conform to the provisions of Section 6705 of the Labor Code of the State of California.

C. Excavation for any trench five (5) feet or more in depth shall not begin until the City has received the Contractor's detailed plan for worker protection from the hazards of caving ground during the excavation of such trench. Such plan shall be submitted at least five (5) days before the Contractor intends to begin excavation for the trench and shall show the details of the design of shoring, bracing, sloping or other provisions to be made for worker protection during such excavation. No such plan shall allow the use of shoring, sloping or a protective system less effective than that required by the Construction Safety Orders of the Division of Industrial Safety, and if such plan varies from the shoring system standards established by the Construction Safety Orders, the plan shall be prepared and signed by an Engineer who is registered as a Civil or Structural Engineer in the State of California.

D. Contractor shall obtain, pay for, and comply with all provisions of the permit required by Section 6500 of the California Occupational Safety and Health Act of 1973.

3.03 NOISE CONTROL

A. Conform to City of Sacramento's Noise Ordinance. Section 66.203 of the ordinance exempts construction noise from the quantitative limits if the construction occurs between 7:00 am and 6:00 pm, Monday through Saturday, and/or between 9:00 am and 6:00 pm Sunday; Operation of internal combustion engines is not exempt pursuant to this sub-section if engines are not equipped with suitable exhaust and intake silencers.

**** End of Section ****

SECTION 01511

TEMPORARY ELECTRICITY

PART 1 - GENERAL

1.01 REQUIREMENTS INCLUDED

A. Power

1. Contractor shall provide and make arrangements for temporary electric service for all purposes of power and lighting as required for construction, and shall maintain such service until completion of the contract.

1.02 RELATED REQUIREMENTS

A. Section 01500, “Construction Facilities and Temporary Controls”

B. Section 16010, “Electrical Work”

C. Section 16530, “Lighting”

1.03 REQUIREMENTS OF REGULATORY AGENCIES

A. Comply with National Electric Code.

B. Comply with Federal, State and local codes and regulations and with utility company requirements.

1.04 SERVICE REQUIREMENTS

A. Provide power centers, as required, for miscellaneous tools and equipment used in the work.

1. Weatherproof distribution box with minimum of four (4) 20-Amp, 120-Volt grounded outlets.
2. Locate so that power is available at any point of use with not more than 100-foot (30m) power cords.
3. Minimum: One (1) on each floor of each building.
4. Circuit breaker protection for each outlet.

B. Capacity of Service

1. Provide electrical service for construction use by trades during the construction period; minimum 120/240-Volts, 1 Phase, 60-Hertz.
2. Notify SMUD when unusually heavy loads, such as for welding and other equipment with special power requirements, will be connected.
3. Any trade requiring service of capacity or characteristics other than that specified shall provide and pay for the additional service.

4. Make arrangements to obtain temporary power from the local utility, or use portable generators.

1.05 LIGHTING REQUIREMENTS

A. Provide temporary artificial lighting in enclosed areas and for all areas when natural light does not meet minimum requirements for:
   1. Construction work areas - uniform illumination of 20-foot candles.
   2. Security
   3. Temporary offices, storage, shop and other construction buildings

1.06 COSTS OF INSTALLATION AND OPERATION

A. Pay fees and any permit charges for temporary power from SMUD.

B. Pay costs of installation, maintenance and removal of temporary services, and restoration of any permanent facilities used.

C. Cost of power used will be paid by the Contractor.

PART 2 - PRODUCTS

2.01 MATERIALS

A. General
   1. Comply with applicable requirements specified in Sections of Division 16 - Electrical.
   2. Materials may be new or used, but must be adequate for required usage, and must not violate requirements of applicable codes and standards.

PART 3 - EXECUTION

3.01 GENERAL

A. Comply with applicable requirements specified in Sections of Division 16 - Electrical.

B. Maintain system to provide continuous service.

C. Modify and extend service as work progress requires.

3.02 INSTALLATION

A. Locate fixtures to provide full illumination of required areas.

B. Make connections for temporary heating, cooling and ventilating equipment.
   1. Wire all safety devices specified for final operation of equipment.
   2. Verify proper operation of safety devices.

3.03 REMOVAL

A. Completely remove temporary materials and equipment:
   1. When construction needs can be met by use of the permanent installation.
   2. And/or at project completion.

B. Restore existing and/or permanent facilities used for temporary services to original or better condition.

**** End of Section ****

SECTION 01600

MATERIALS AND EQUIPMENT

PART 1 - GENERAL

1.01 DESCRIPTION

A. Requirements Included
   1. Products
   2. Transportation and Handling
   3. Storage and Protection
   4. Substitutions and Product Options

B. Related Requirements:
   1. Section 01330, “Submittals”

1.02 QUALITY ASSURANCE

A. Include within the Contractor's quality assurance program such procedures as are required to assure full protection of work and materials.

1.03 PRODUCT DELIVERY, STORAGE AND HANDLING

A. Manufacturer's Recommendations
   1. Except as otherwise approved by the Engineer, determine and comply with manufacturer's recommendations on product handling, storage and protection.
      a. Maintain packaged materials with seals unbroken and labels intact until time of use.
      b. Promptly remove damaged materials and unsuitable items from the job site, and promptly replace with material meeting the specified requirements, at no additional cost to the City.
   2. The Engineer may reject as non-complying such material and products that do not bear identification satisfactory to the Engineer as to manufacturer, grade, quality, and other pertinent information.
   3. Promptly inspect shipments to assure that products comply with requirements, quantities are correct, and products are undamaged.

1.04 JOB CONDITIONS

A. Storage and Protection
   1. Store products in accordance with manufacturer's instructions, with seals and labels intact and legible. Store sensitive products in weather-tight enclosures; maintain within

temperature and humidity ranges required by manufacturer's instructions.

2. For exterior storage of fabricated products, place on sloped supports above ground. Cover products subject to deterioration with impervious sheet covering; provide ventilation to avoid condensation.
3. Store loose granular materials on solid surfaces in a well-drained area; prevent mixing with foreign matter.
4. Arrange storage to provide access for inspection. Periodically inspect to assure products are undamaged, and are maintained under required conditions.
5. After installation, provide coverings to protect products from damage from traffic and construction operations, remove when no longer needed.
6. Maintain finished surfaces clean, unmarred, and suitably protected until accepted by the Owner.

B. Repairs and Replacements

1. In event of damage, promptly make replacements and repairs to the approval of the Engineer and at no additional cost to the City.
2. Additional time required to secure replacements and to make repairs will not be considered to justify an extension in the Contract Time of Completion.

1.05 ALTERNATIVES

A. Within ten (10) days after date of Contract, submit complete list of major products proposed, with name of manufacturer, trade name, and model.

B. Options

1. Products Specified by Reference Standards or by Description Only - Any product meeting those standards
2. Products Specified by Naming One (1) or More Manufacturers with a Substitute Paragraph - Submit a request for substitution for any manufacturer not specifically named
3. Products Specified by Naming Several Manufacturers - Products of named manufacturers meeting specifications; no options, no substitutions allowed
4. Products Specified by Naming Only One (1) Manufacturer - No options, no substitutions allowed

C. Substitutions:

1. Within ten (10) calendar days after date of Contract, Contractor shall submit requests to the Engineer for consideration of substitutions.
2. Document each request with complete data substantiating compliance of proposed substitution with Contract Documents.
3. Request constitutes a representation that Contractor:
    a. Has investigated proposed product and determined that it meets or exceeds, in all respects, specified product.
    b. Will provide the same warranty for substitution as for specified product.

c. Will coordinate installation and make other changes that may be required for Work to be complete in all respects.

d. Waives claims for additional costs that may subsequently become apparent.

4. Substitutions will not be considered when they are indicated or implied on shop drawing or product data submittals without separate written request, or when acceptance will require substantial revision of Contract Documents.

5. Engineer will determine acceptability of proposed substitution, and will notify Contractor of acceptance or rejection in writing within a reasonable time.

6. The Engineer can, at his option, require as a condition of acceptance of a substitution that the Contractor provide a credit to the City for the difference in cost of product(s) or components, or systems proposed as a substitution.

7. If, upon Engineer's review of a substitution, it is determined by the Engineer that the substitution is not acceptable, for whatever reason, the Contractor shall supply the specified product or products.

PART 2 - PRODUCTS

Not Used.

PART 3 - EXECUTION

3.01 SHIPPING AND PROTECTION OF EQUIPMENT

A. Definition

1. For the purpose of this article, "equipment" means all mechanical devices, all electrical devices, all electronic devices, and all items with one or more moving parts.

B. Packing and Marking

1. All equipment shall be adequately and effectively protected against damage from moisture, dust, handling or other cause during transport from manufacturer's or supplier's premises to site. Each item or package shall be clearly marked with a fitting or distinguishing mark that shall be shown on the packing lists. Stiffeners shall be used where necessary to maintain shapes and to give rigidity. Parts of equipment shall be delivered in assembled or sub-assembled units where possible.

C. Identification of Equipment

1. Each item of equipment shall have firmly affixed to it a nameplate, label or tag with its equipment number or other discrete identifying mark.

D. Storage of Equipment

1. Contractor shall provide storage for equipment; for the entire interval between receiving and installation, and for the entire interval between being removed and reinstalled. Equipment shall be stored in an enclosed space affording protection from weather, dust and mechanical damage and providing favorable temperature, humidity and ventilation conditions as required to ensure against equipment deterioration. Storage container shall be heated above dew point temperature.

E. After installation, all equipment shall be protected as required. During construction, including finishing, all equipment that may be affected must be completely covered.

F. Delivery of Equipment

1. City personnel will not accept materials or equipment deliveries for the Contractor.

G. Security

1. Security of equipment stored by the Contractor is the sole responsibility of the Contractor. All losses or damage shall be replaced or repaired at the Contractor's expense.

**** End of Section ****

SECTION 01770

CONTRACT CLOSEOUT

PART 1 - GENERAL

1.01 DESCRIPTION

A. Requirements Include
   1. Closeout Procedures
   2. Final Cleaning
   3. Record Drawings
   4. Spare Parts and Maintenance Materials
   5. Warranty

B. Related Requirements
   1. Section 01330, “Submittals
   2. Section 01500, “Construction Facilities and Temporary Controls”
   3. Section 16950, “Operational Testing”

1.02 SUBMITTALS

A. Submittals shall include the following:
   1. Record Drawings
   2. Spare parts as indicated in the individual sections
   3. Operation and Maintenance Manuals (draft and final versions)

PART 2 – PRODUCTS

Not Used.

PART 3 - EXECUTION

3.01 CLOSEOUT PROCEDURES

A. When Contractor notifies the Engineer that the project has been completed, the Engineer shall perform a walk through and develop a list of deficient work items.

B. After Contractor completes correction of the deficiencies to the satisfaction of the Engineer, a final walk through will be scheduled with the City Operation and Maintenance personnel. At the final walk through, a punchlist will be developed and submitted to the Contractor.

C. Contractor shall notify the Engineer when all punchlist items have been completed. The Engineer will then inspect the work. If the work is completed to the satisfaction of the Engineer, and if as-built drawings, and operation and maintenance manuals, are completed and submitted, a completion report will be prepared.

3.02 FINAL CLEANING

A. Execute prior to final walk through.

B. Clean all interior and exterior surfaces; remove temporary labels, stains and foreign substances, polish transparent and glossy surfaces. Clean equipment and fixtures to a sanitary condition, clean or replace filters on mechanical equipment. Clean roofs and drainage systems of any debris. Vacuum inside switchgear.

C. Clean site; sweep paved areas, rake clean other surfaces.

D. Remove surplus materials, rubbish, and temporary construction facilities.

3.03 RECORD DRAWINGS

A. Conform to CSSS Section 5-8.

3.04 SPARE PARTS AND MAINTENANCE MATERIALS

A. Provide spare parts and maintenance materials in quantities specified in each section. Coordinate delivery with the Engineer, and obtain receipt prior to final payment.

3.05 WARRANTY

A. Contractor's warranty term shall begin the date the job is accepted by the City.

**** End of Section ****

DIVISION 2 – SITE CONSTRUCTION

SECTION 02220

DEMOLITION AND SALVAGE OF MATERIALS

PART 1 - GENERAL

1.01 DESCRIPTION

A. Scope of Work

1. The work includes demolition, removal, and salvage where specified of all items indicated on the drawings, or specified herein.

B. All materials resulting from demolition work, except as otherwise indicated on the drawings or specified herein for re-use by the Contractor or re-use by the City shall become the property of the Contractor.

1.02 AVAILABILITY OF WORK AREAS

A. Subject to all related Contract stipulations, the contract area will be released to the Contractor, at one time, upon issuance of the Notice-to-Proceed. Unless otherwise directed, the Contractor shall maintain access to and shall not begin demolition of the existing well electrical and mechanical facilities until authorized in writing by the Engineer.

1.03 SUBMITTALS

A. The procedures proposed for the accomplishment of demolition and storage of salvaged materials shall be submitted for approval. The procedures shall provide for safe performance of work, careful removal and disposition of materials specified to be stored, protection of property which is to remain undisturbed, and coordination with other work in progress. The procedures shall include a detailed description of the methods and equipment to be reused for each operation, and the sequence of operations.

B. Submit schedule for demolition activities.

1.04 SAFETY PROCEDURES AND WORKER PROTECTION

A. Take all precautions and measures required to protect employees, related trade employees, City employees, residents, and the general public from exposure to energized parts.

1. All personnel authorized for entry into work areas shall be instructed in the proper procedures for high voltage work. In instances where off-line equipment may require removal from high voltage installations, personnel will be instructed and properly supervised for working in the vicinity of high-voltage equipment.

2. All electrical equipment upon which activities are to be performed shall be de-energized and permanently disconnected from any power source prior to commencing any work.

B. Erect barriers, fences, guard rails, enclosures, chutes, and shoring to protect personnel, structures, and utilities remaining intact. Protect trees and plants from damage.

PART 2 - PRODUCTS

Not Used.

PART 3 - EXECUTION

3.01 INSPECTION

A. Verify that areas to be demolished are unoccupied and no longer are in use.

B. Do not commence work until conditions are acceptable to the City.

3.02 PREPARATION

A. Contractor shall hold a field meeting at the existing well site prior to beginning demolition work. Meeting shall cover the Contractors procedures for removal and transportation of salvaged items. Attendees shall include as a minimum: Tim Giffin (916) 808-7997, Vernon Fields (916) 808-5542, and Amy Kral (916) 808-5651 of the Department of Utilities, Plant Services Division. Contractor shall give attendees forty-eight (48) hours of notice in advance of said field meeting.

B. Remove items scheduled to be salvaged for City, and place in designated storage area or as otherwise directed by the Engineer.

3.03 DEMOLITION

A. Salvage existing equipment as directed by City.

B. Protect fencing, landscaping, and other improvements on adjacent private properties that are exposed by demolition work.

C. Make neat saw cuts a minimum of one inch (1") in depth, around perimeter of Portland cement concrete or asphaltic concrete to be removed, where remaining concrete surface is to be incorporated into new work. Where new asphalt paving is to match existing asphalt paving, sawcut existing pavement to a neat straight line and apply a tack coat of asphaltic emulsion to the surface of the existing pavement prior to placing new asphalt paving.

D. Remove existing exposed conduit and electrical wiring and conduit to be abandoned to structural surface, cut flush, and finish to match existing surfaces.

3.04 SALVAGE

A. The Contractor shall deliver any item to be salvaged to the City's Combined Sewage Treatment Plant, located at 1391 35th Avenue between the hours of 8:00AM and 2:00PM. The Contractor shall contact Tim Giffin at (916) 808-7997 or Vernon Fields at (916) 808-5542 to coordinate

delivery of these items. All removed conduit and conductors shall become property of the Contractor, unless otherwise directed by the Engineer.

3.05 CLEAN-UP

A. Debris and Rubbish

1. Debris and rubbish shall be removed from the limits of work daily to a location approved in advance by the Engineer. Do not allow to accumulate on-site.

B. Debris Control

1. Debris shall be removed and transported in a manner as to prevent spillage on streets or adjacent areas. Local regulations regarding hauling and disposal apply.

**** End of Section ****

SECTION 02240

CONTROL OF WATER

PART 1 - GENERAL

1.01 DESCRIPTION

A. Scope

1. This Section provides specifications for dewatering systems and appurtenances to be used during construction including those for maintaining drainage flows throughout the project.

B. Contractor shall furnish, install, operate, and maintain sufficiently sized water control equipment that will maintain excavations free of water, regardless of source, until backfilled to final grade.

C. The Contractor shall comply with all federal, state, and local laws and regulations concerning environmental pollution arising from construction activities.

1.02 SUBMITTALS

A. Before any diversion and/or dewatering commences, the Contractor shall submit the methods, installation, and details of the proposed systems for review and approval. If dewatering plan indicates discharge into another agencies' facility, the plan shall be approved by the agency having jurisdiction. The dewatering system plans shall indicate at least the following:

1. Sizes of pumps, discharge piping, and piping appurtenances
2. Personnel responsible for monitoring the dewatering system and dewatered excavations
3. Provisions to confine fuel and oil spills in the event of their occurrence
4. Plans to segregate construction water (contaminated with form oils, concrete residues, etc.) from clean water
5. Plans to dispose of the construction water and residue solids
6. Supporting design documentation

PART 2 - PRODUCTS

Not Used.

PART 3 - EXECUTION

3.01 GENERAL

A. The Contractor shall furnish, install, operate, and maintain all machinery, appliances, and equipment to maintain all excavations free from water during construction, and shall dewater

and dispose of the water so as not to cause injury to public or private property, or to cause a nuisance or menace to the public.

B. The control of groundwater shall be such that softening of the bottom of excavations, or formation of “quick” conditions or “boils,” does not occur. Dewatering systems shall be designed and operated so as to prevent removal of the natural soils. Dewatering shall allow the required compaction of the subgrade to the values specified.

C. Dewatering systems shall operate continuously until backfill has been completed to one foot (1') above the normal groundwater level and all sources of water entering the excavation have stopped and all water has been removed.

D. Contractor shall be fully responsible and liable for damages which may result from failure to adequately keep excavations dewatered or to maintain drainage flows.

3.02 DISPOSAL OF WATER

A. Contractor shall dispose of water resulting from the dewatering operation in a suitable manner without damage to adjacent property. Only clean, uncontaminated water resulting from the dewatering operation shall be pumped into any existing waterway.

**** End of Section ****

SECTION 02250

SHEETING, SHORING, AND BRACING

PART 1 - GENERAL

1.01 SCOPE

A. This Section specifies requirements for sheeting, shoring and bracing of trenches and excavations greater than five feet (5') in depth.

1.02 REFERENCES

A. The publications referred to hereinafter form a part of this specification to the extent referenced. The publications are referred to in the text by the basic designation only. Unless otherwise indicated, the latest edition of referenced publications in effect at the time of the bid shall govern. In case of conflict between the requirements of this Section and those of the listed documents, the requirements of this Section shall prevail.

Reference	Title
CAL OSHA	*State of California Construction Safety Orders, California State Labor Code*

1.03 DESIGN REQUIREMENTS

A. The Contractor shall design sheeting, shoring, and bracing in accordance with Article 6 of CAL OSHA and the California State Labor Code. The standards of design referred to in the Labor Code shall be those of CAL OSHA. The shoring procedure designed by the Contractor shall be suitable for the site subsurface conditions and project operational constraints.

1.04 SUBMITTALS

A. Contractor shall submit information required by Section 6705 of the California State Labor Code to the Engineer in accordance with Section 01330, “Submittals”.

PART 2 - PRODUCTS

Not Used.

PART 3 - EXECUTION

3.01 GENERAL

A. Construction of sheeting, shoring and bracing shall not disturb the state of soil adjacent to or below the trench or excavation.

**** End of Section ****

SECTION 02315

EARTHWORK

PART 1 - GENERAL

1.01 DESCRIPTION

A. Scope of Work

1. Contractor shall furnish all labor, materials, equipment and incidentals necessary to perform all excavation, backfill, grading, and compaction, regardless of type or class, that is required to complete the work shown on the drawings and specified herein. The work shall include, but not necessarily be limited to: clearing; excavation for structures, footings, fence posts, hand holes, pull boxes, duct, conduit, pipe, and paving; backfilling; filling; embankment construction; grading; disposal of surplus and unsuitable materials; and all related work such as dust control, sheeting, shoring, bracing, and control of water.

B. Related Work

1. Section 01410, “Quality Control”
2. Section 02321, “Controlled Density Fill”
3. Section 02240, “Control of Water”
4. Section 02250, “Sheeting, Shoring, and Bracing”
5. Section 02740, “Paving and Gravel Surfacing”

1.02 DEFINITIONS

A. Relative Compaction - the measured field dry density divided by the maximum dry density determined in accordance with ASTM D1557, expressed as a percentage

B. Prepared Subgrade - any excavated or graded surface formed as the result of work by the Contractor upon which any fill, aggregate base, sand, gravel, structure, or other material is to be placed.

1.03 REFERENCES

A. The publications referred to hereinafter form a part of this specification to the extent referenced. The publications are referred to in the text by the basic designation only. Unless otherwise indicated, the latest edition of referenced publications in effect at the time of the bid shall govern. In case of conflict between the requirements of this Section and those of the listed documents, the requirements of this Section shall prevail.

American Society of Testing Materials (ASTM)	
ASTM D1557	Test Methods for Moisture-Density Relations of Soils and Soil-Aggregate Mixtures using a 10-lb Rammer and 18-inch Drop

ASTM D2487	Test Method for Classification of Soils for Engineering Purposes
ASTM D2922	Density of Soil and Soil Aggregate in place by Nuclear Methods
ASTM D3017	Moisture Content of Soil and Soil Aggregate in Place by Nuclear Methods
ASTM D4318	Liquid Limit, Plastic Limit and Plasticity Index of Soils

State of California - Department of Transportation	
Caltrans	Standard Plans & Specifications (July 1992)

City of Sacramento (CSSS)	
CSSS	Standard Specifications, latest edition

1.04 SUBMITTALS

A. Submit the following for approval in accordance with Section 01330, “Submittals”:

1. Test Reports of measured fill/ backfill/ or embankment density, moisture, and relative compaction.
2. Samples and index property test results indicating conformance with the specifications of each imported material and any embankment fill material proposed for use. Contractor shall notify the Engineer of the source of the material and shall furnish for approval to the inspector a representative sample weighing approximately 50-pounds, at least ten (10) calendar days prior to the date of anticipated use of such material.

PART 2 - PRODUCTS

2.01 GENERAL

A. Materials shall be furnished as required from on-site sources or hauled to the site from off-site sources.

2.02 ENGINEERED FILL

A. Engineered fill shall be used for general structural backfill, channel bottom, and trench backfill. Material shall consist of soil excavated on site or hauled in from off-site sources. Material shall be substantially well graded from coarse to fine with no gap or uniform grading of any particular size particle, and shall be free of organic material, wood, trash, peat and other objectionable material which cannot be compacted properly. Engineered fill shall not contain stones, broken concrete, masonry, rubble or other similar material larger than 2-inches in any dimension. Material used must be acceptable to the Engineer.

2.03 SAND

A. Sand shall be used for handholes, pull boxes, duct and pipe bedding in conformance with applicable Sections of the CSSS and the details on the drawings.

B. Sand shall be unwashed river-type, clean and free of organic material, trash, peat, and other objectionable material conforming to the following gradation:

Sieve Size	% Passing
No. 4	100
No. 8	80 - 100
No. 100	0 - 35
No. 200	0 - 8

2.04 PEA GRAVEL

A. Pea gravel may be used as an alternative to sand for bedding and cover, provided that it is clean, free-draining, and conforms to the following gradation:

Sieve Size	% Passing
1/2 inch	100
3/8 inch	80 - 100
No. 200	0 - 5

2.05 DRAIN ROCK

A. Drain rock shall be 1-inch maximum, clean, free draining gravel or crushed rock conforming to the following gradation:

Sieve Size	%Passing
3/4 inch	90 - 100
½ inch	30 - 60
3/8 inch	0 - 20
No. 4	0 - 5
No. 200	0 - 2

B. Drain rock shall have a minimum sand equivalent of 50, and the material retained on the 3/8-inch sieve shall contain at least 50% of particles having three or more fractured faces.

2.06 CRUSHED ROCK

A. Crushed rock shall meet the specifications for course crushed screenings as described in Caltrans Section 37-1.02, and the following gradation:

Sieve Size	% Passing
3/4 inch	100
1/2 inch	95 - 100
3/8 inch	50 - 80
No. 4	0 - 15
No. 8	0 - 5
No. 200	0 - 2

B. Crushed rock shall have a minimum sand equivalent of 30.

2.07 AGGREGATE BASE

A. Conform to the requirements for Class II aggregate base, 3/4" maximum aggregate size in accordance with CSSS Section 10-7.

PART 3 - EXECUTION

3.01 GENERAL EARTHWORK REQUIREMENTS

A. Perform clearing, grubbing, and tree removal in accordance with CSSS Section 12.

B. Construction, including excavation, backfill, compaction, dewatering, and bracing systems, shall conform to the plans and these specifications.

C. Neither the elevation of the bottom of any completed excavation nor the top layer of any compacted graded surface material shall vary more than +0.08 or -0.08 feet respectively from the elevations indicated in these specifications or on the drawings.

D. **Control water in accordance with Section 02240, “Control of Water”.**

E. If, in the opinion of the Engineer, the surface of the prepared subgrade is not in suitable condition at any time, due to failure of the Contractor to properly care for, dewater, or otherwise conduct earthwork operations properly, then the Contractor shall remove the unsuitable material and replace it with material compacted to at least ninety percent (90%) relative compaction at his own expense. The condition of the prepared subgrade shall meet with approval of the Engineer before any work is placed thereon.

F. During earthwork operations, surface grades shall be maintained in such condition that work areas, as much as practicable, will be well drained at all times. When directed, temporary drains and drainage ditches shall be installed to intercept or divert surface water which may affect the prosecution of the work.

G. Where trenching or other excavation crosses established landscaped areas, remove all plant growth with approved equipment. Cut to the lines shown or as directed, and if practical, store and maintain removed plants for later replacement. If any relocated plant deteriorates within three months of being planted, replace in kind with new plant of same variety and equal or better quality and size.

3.02 EXCAVATION

A. Excavate to the lines and grades shown or required to complete the construction. Make allowance for forms, supports, etc.

B. If over-excavation occurs due to Contractor error, at any foundation, or where proposed structures will bear thereon, or at the bottom of any channel, over-excavated areas will be filled to finish subgrade with Controlled Density Fill, properly leveled to finish lines and grades.

C. Side slopes of excavations shall be no steeper than the safe stable slope for the soils encountered. Refer to Section 02250, “Sheeting, Shoring, and Bracings”.

D. If, at the time of excavation, it is not possible to place material in its intended permanent location, then the material shall be stockpiled in approved areas for later use. No extra payment will be considered for stockpiling or double handling of excavated material.

3.03 TRENCH EXCAVATION AND BACKFILL

A. Trench excavation and backfill for laying pipe shall be in accordance with Section 26 of CSSS and these specifications. Excavation for all trenches required for the installation of ducts and handholes shall be made to the depths indicated on the Drawings.

B. Shape excavated trench bottom to assure uniform contact with the full length of the installed line and remove any sharp edged materials that might damage the line. Compaction shall be maintained beneath the line. Place initial backfill by hand placement around the utility to just over half depth, and compact in a manner to insure against lateral or vertical displacement. Place initial backfill to 6-inches above the utility line by hand placement. Compact backfill above the initial backfill to at least ninety percent (90%) relative compaction.

3.04 PLACEMENT OF GEOTEXTILE FABRIC

A. Refer to Section 02620, “Geotextiles”. Where geotextile fabrics are placed under aggregate beneath structures, unless otherwise directed, the geotextile shall extend up the sides of the excavation and wrap atop the aggregate, and be extended at least 1-foot back under the bottom of the structural slab so as to encase the aggregate.

3.05 PLACEMENT OF ENGINEERED FILL AND EMBANKMENT FILL

A. Engineered fill shall be spread in layers and shall have a uniform moisture content that will provide the specified dry density after compaction. Embankment fill shall be placed at a moisture content at least two percent (2%) wet of optimum. If necessary to obtain uniform distribution of moisture, water shall be added to each layer by sprinkling and the soil disced, harrowed, or otherwise manipulated after the water is added. The loose layer thickness of the fill material shall not exceed eight (8) inches and each layer shall be compacted with suitable compaction equipment to provide the specified dry densities.

B. No fill shall be placed during weather conditions for which the Contractor cannot insure the specified compaction. After placing operations have been stopped because of adverse weather conditions, no additional fill material shall be placed until the last layer compacted has been checked and found to be compacted to the specified density.

C. Independent testing may be made on each layer to assure adequate compaction throughout

the entire area. If the dry densities are not satisfactory to the Engineer, the Contractor will be required to increase the weight of the compactor or the number of passes as required to produce the specified densities.

D. Backfill shall not be placed against walls until the concrete has obtained a compressive strength equal to the specified 28-day compressive strength. Where backfill is to be placed on both sides of the wall, the backfill shall be place simultaneously on both sides to prevent differential pressures. The Contractor shall submit a schedule of wall shoring, bracing, and backfilling that is coordinated with the concrete curing, test cylinder reports, and the design assumptions, and obtain approval from the Engineer prior to proceeding.

3.06 COMPACTION

A. Embankment Fill, Engineered Fill, Backfill, and Trench Backfill shall be compacted to at least ninety percent (90%) relative compaction.

B. The uppermost 0.5-feet of the prepared subgrade beneath all paving and/or gravel surfacing placed this contract, whether in an excavated, original grade, filled, or backfilled area, shall be compacted to at least ninety-five percent (95%) relative compaction.

C. Do not place any form work, concrete, or surfacing material until underlying compaction tests are satisfactory to the Engineer.

3.07 GRADING AND SURFACE FINISH WORK

A. Grading shall be performed at such places as are required to obtain the final lines, grades and elevations shown on the drawings. All unacceptable material encountered, of whatever nature within the limits of grading, shall be removed and disposed off-site.

B. All fill slopes shall be compacted by slope rolling and trimming, or shall be overfilled and trimmed back to planned grade, to expose a firm, smooth surface free of loose material.

C. Prepare landscaped areas for proper planting of previously removed plants or new plants. Remove trench and backfill materials from adjacent areas to permit unhindered growth of plants. Replace all damaged existing plant material to original or better condition. Planted areas that do not reestablish at the commencement of the next growing season shall be replaced at Contractor's cost.

D. Cleanup

1. Prior to final inspection and acceptance, remove all rubbish and excess material for disposal as approved, and leave area in a neat, satisfactory condition.

3.08 DISPOSAL

A. All surplus excavated and imported material not utilized in the construction shall be removed and disposed of off-site.

3.09 DUST CONTROL

A. Contractor shall provide dust control during excavation and backfill operations. At least one (1) mobile unit with 1,000 gallon capacity shall be available for applying water or dust palliative in accordance with Section 18 of the Caltrans Standard Specifications. Dust control mobile unit

shall have a positive shut off valve, and shall apply water or palliative with pressure type distribution nozzles to insure uniform application. The amount of dust control shall be to the satisfaction of the Engineer.

3.10 TESTING

A. Refer to Section 01410, “Quality Control”. The City will pay for initial compaction testing during placement of embankment and backfill materials, but the Contractor shall pay for all additional tests required until compliance is obtained. Remove surface material at locations designated by the Inspector and provide such assistance as necessary for sampling and testing by the testing laboratory.

**** End of Section ****

SECTION 02321

CONTROLLED DENSITY FILL

PART 1 - GENERAL

1.01 DESCRIPTION

A. This Section covers the use of controlled low strength material (CLSM) for backfill. CLSM should develop between 50 and 150 psi compressive strength so it can be excavated by hand in the future.

1.02 SUBMITTALS

A. At least ten (10) days before placing CLSM, Contractor shall submit a mix design for the CLSM. The mix design shall include trial laboratory and testing data with cylinder breaks performed at 7, 14, and 28 days.

PART 2 - PRODUCTS

2.01 CLSM

A. Contractor and its supplier shall determine the materials and proportions used to meet the requirements of these specifications.

B. Provide a mixture of cement, fly ash, aggregate, and admixtures as required to provide a non-segregating, self-consolidating, free-flowing and hand-excavatable material, which will result in a hardened, dense, non-settling fill. The unconfined compressive strength at 28 days shall be 100 psi (±50 psi) per ASTM D4832.

C. Component materials shall conform to the following:

1. Cement - ASTM C150, Type II or V
2. Aggregate - Aggregate shall consist of fine aggregate, with or without coarse aggregate, with a maximum size of 1-inch, free of clay, organics, and other deleterious materials. Less than ten percent (10%) by weight shall pass the No. 200 sieve, and material passing the No. 40 sieve shall be non-plastic as determined in accordance with ASTM D4318.
3. Water - Potable
4. Fly Ash - ASTM C618, Class F unless otherwise approved
5. Admixture (if used) - Air Entraining per ASTM C260

D. Prior to CLSM placement on the project, prepare field trial mixes utilizing the actual equipment that will be used on the job. Vary proportions as required to produce a dense, homogeneous material with good workability.

E. Six (6) standard test cylinders shall be obtained from each trial mix produced. Sampling shall be in accordance with either ASTM C94 or C685. Compressive testing shall be in accordance

with ASTM D4832, with one specimen tested at 7 days, one at 14 days, one at 21 days, and two at 28 days. One specimen shall be held as a "spare" and may be used in the event of questionable results from one of the scheduled tests.

PART 3 - EXECUTION

3.01 PLACING CLSM

A. CLSM batching, mixing, and placing may be started if the weather conditions are favorable and when the air temperature is 34°F and rising. At the time of placement, the CLSM must have a temperature of at least 40°F. Mixing and placing shall stop when the air temperature is 38°F or less and falling.

B. Subgrade on which CLSM is to be placed shall be free of disturbed or softened material, debris, and water.

C. Contain CLSM using bulkheads or fill materials to confine the flow of material. Take appropriate precautions to prevent displacement and/or flotation of adjacent facilities.

D. CLSM shall be placed in lifts not exceeding 6 feet in height, with a time interval of not less than one (1) hour between lifts.

E. No traffic or construction equipment shall be allowed on CLSM for at least 24-hours after placement, or until the material is hard enough to prevent rutting or damage.

3.02 FIELD TESTING

A. CLSM shall be sampled and tested in accordance with either ASTM C94 or C685. At a minimum, samples for tests shall be taken from each 150-cubic yards or fraction thereof for each day's placement. Tests shall include four (4) compressive strength cylinders. Compressive strength sampling and testing shall conform to ASTM D4832 with one sample tested at 7 days, two samples at 28 days, and one held from each batch.

**** End of Section ****

SECTION 02620

GEOTEXTILES

PART 1 - GENERAL

1.01 SUMMARY

A. Description of Work

1. Provide Nonwoven Engineering Fabric (Geotextile) manufactured from polyester, nylon, or polypropylene material, or any combination thereof, for soil separation purposes where shown on the drawings and/or as directed by the Engineer.

B. Geogrid and/or geotextiles for use as backfill reinforcement in segmental-block retaining walls shall be as specified for the walls.

1.02 SUBMITTALS

A. Product Data

B. Certificates of Compliance

1.03 DELIVERY, STORAGE, AND HANDLING

A. Furnish engineering fabrics in protective covers capable of protecting the fabric from ultraviolet rays, abrasion, and water.

B. Conform to manufacturer's recommendations.

PART 2 - PRODUCTS

2.01 GEOTEXTILE

A. Conform to the material requirements for Rock Slope Protection Fabric, Type B Placement, in Section 88-1.04 of the July 1992 Caltrans Standard Specifications.

PART 3 - EXECUTION

3.01 PREPARATION

A. Surface Preparation

1. During grading operations, take care not to disturb the prepared subgrade. This may require use of lightweight equipment on low strength or compressible soils.

B. Prior to placement of fabric, prepare surface to smooth conditions free of debris, depressions, or obstructions which might damage the geotextile if left in-place.

3.02 INSTALLATION

A. Follow manufacturer's installation instructions and as supplemented herein.

B. Place the geotextile fabric smoothly without folds or wrinkles.

C. Use special care when placing the geotextile in contact with the soil so that no void spaces occur between the geotextile and the prepared subgrade.

D. Overlap the geotextile sheets according to manufacturer's installation instructions.

E. Place aggregate on the geotextile as shown, specified, or as directed.

3.03 FIELD QUALITY CONTROL

A. Before covering, the condition of the geotextile will be observed by the Engineer in order to determine that no holes or rips exist. Repair all such occurrences by placing a new layer of fabric extending beyond the defect in all directions a distance equal to the minimum overlap required for adjacent rolls.

**** End of Section ****

SECTION 02740

PAVING AND GRAVEL SURFACING

PART 1 – GENERAL

1.01 DESCRIPTION

A. Scope of Work

1. Contractor shall furnish all labor, materials, equipment, and incidentals necessary to construct all paving and gravel surfacing shown on the drawings, and/or specified herein. The work shall include, but not necessarily be limited to preparing the subgrade, placing and compacting aggregate base, saw cutting existing pavement, applying paint binder, placing and compacting asphalt concrete, applying seal coats, and all related work.
2. Areas to receive gravel surfacing shall be prepared, then aggregate base material placed and compacted as specified herein for paving, except that no paint binder or paving shall be placed.

B. Related Work

1. Section 01410, “Quality Control”
2. Section 02315, “Earthwork”

1.02 SUBMITTALS

A. The following information shall be submitted for approval in accordance with the General Conditions and Section 01330, “Submittals”.

1. Manufacturer's Data
   a. Aggregate base
   b. Paint binder
   c. Asphalt concrete mix design and copies of delivery tickets
2. A certificate of compliance, signed by the manufacturer, shall be furnished prior to the use of any project site asphalt materials. The certificate shall state that the furnished materials will comply with the requirements of these Specifications.
3. A delivery ticket that clearly identifies the product and quantity of each lot of material shall accompany each load delivered to the site. Unless requested earlier by the Engineer, retain the delivery tickets until the end of the job.

1.03 REFERENCE PUBLICATIONS

American Society of Testing Materials (ASTM)

ASTM D1557	Test Methods for Moisture-Density Relations of Soil and Soil-Aggregate Mixtures
ASTM D2041	Test Method for Theoretical Maximum Specific Gravity and Density of Bituminous Paving Mixtures.
ASTM D2922	Density of Soil and Soil Aggregate In-Place by Nuclear Methods
ASTM D3017	Moisture Content of Soil and Soil Aggregate In-Place by Nuclear Methods

State of California - Department of Transportation	
Caltrans	Standard Plans & Specifications (July 1992)

PART 2 - PRODUCTS

2.01 AGGREGATE BASE

Aggregate base shall be as specified in Section 02315, “Earthwork”, of these specifications.

2.02 PAINT BINDER

Paint binder (tack coat) shall meet all the requirements of Caltrans Specification Section 94.

2.03 ASPHALT CONCRETE

A. Asphalt concrete shall be commercially available material that meets the performance and grading requirements for Type A Asphalt Concrete (½-inch maximum, medium grading) as specified in Caltrans Standard Specification Section 39-2. Unless otherwise approved, the bitumen content shall be between 4.8 and 7.0 percent. A job mix formula will not be required provided that the material conforms to the requirements herein, **and** the mix design to be used has been approved by the City, County of Sacramento, or Caltrans, for placement on any project constructed within the last three years in Sacramento County.

B. Asphalt shall conform to the requirements of Caltrans Standard Specification Section 92-1.02 for viscosity grade AR 4000 steam-refined paving asphalt.

2.04 HEADER BOARD

A. Header board, where installation is required, shall consist of continuous pressure treated douglas fir 2”x4” attached to 18-inch pressure treated douglas fir 2”x4” stakes at 4-feet on center.

2.05 SLURRY SEAL

A. Slurry seal shall conform to CSSS Section 23-9.

PART 3 - EXECUTION

3.01 SUBGRADE PREPARATION

A. The uppermost 0.50-feet of all existing subgrade that will underlie aggregate base placed this contract, shall be cleared and stripped, and then scarified to a depth of at least six (6) inches, moisture conditioned as required, and compacted to a relative compaction of not less than ninety-five percent (95%) in accordance with Section 02315, “Earthwork”.

B. Wherever engineered fill material is to be placed under paved or gravel surfaced areas, it shall be placed and compacted to a relative compaction of not less than ninety percent (90%) to within the top six (6) inches and ninety-five percent (95%) for the top six (6) inches in accordance with Section 02315, “Earthwork”.

3.02 CLASS 2 AGGREGATE BASE

A. Class 2 aggregate base shall be placed to a depth as shown on the Plans and in these Specifications. Placement, moisturizing, spreading, and compaction of Class 2 aggregate base shall meet all requirements of Caltrans Standard Specification Sections 26-1.03 through 26-1.05, CSSS Specification Section 17-1, and the details on the drawings. Class 2 aggregate base shall be compacted to not less than ninety-five percent (95%) of maximum dry density.

3.03 PRIME COAT AND PAINT BINDER (TACK COAT)

A. After the sub-base and aggregate base are placed, compacted, and tested, to the satisfaction of the Engineer, the prime coat and tack coat shall be applied in accordance with Caltrans Standard Specification Section 39-4.02. Prime coat shall not be required atop aggregate base unless specifically called for on the plans.

3.04 ASPHALT CONCRETE

A. Place asphalt concrete where shown on the drawings, and to at least the minimum thicknesses indicated. Storing, proportioning, mixing, spreading, and compacting asphalt concrete shall conform to the requirements of Caltrans Standard Specification Sections 39-3 through 39-7, and CSSS Section 22.

3.05 SLURRY SEAL

A. Place slurry seal where shown on the drawings in accordance with CSSS Section 23.

3.06 HEADER BOARD

A. Header board shall not be required unless specifically called for on the drawings. Place header board at the limit of paving not abutting a concrete structure or saw cut line where it is specifically shown or called for on the drawings.

3.07 FINAL GRADING

A. The final grade of asphalt concrete and gravel surfacing shall vary not more than ±0.05-foot from the elevations indicated on the drawings, and shall conform to the requirements of Caltrans Standard Specification Section 39-6. All areas shall be graded to drain.

3.08 TESTING

A. The City will perform the initial field testing for density, moisture, and compaction of asphalt and aggregate base. The Contractor shall pay for re-testing of locations failing to meet the specified compaction in the initial test.

**** End of Section ****

SECTION 02741

ASPHALT CONCRETE PAVING

PART 1 – GENERAL

1.01 SUMMARY

A. This Section describes furnishing, placing, installing, and compacting Aggregate Base and Asphalt Concrete Paving. Workmanship and materials specified herein that are required for project construction, shall be considered as part of the project, and no separate payment will be made therefore. Unless otherwise directed or approved by the Engineer, herbicide, prime coat, and slurry seal coatings are not required.

1.02 REFERENCE STANDARDS

A. Reference standards for the work herein shall be Sections 10, 17, and 22 of the Standard Specifications.

B. In the event of a conflict, the requirements herein shall take precedence over those in the Standard Specifications.

1.03 SUBMITTALS

A. Submittals shall be made in conformance with Section 01330, “Submittals”, and shall include:

1. Certificate of compliance for the Aggregate Base
2. Asphalt Concrete Job-Mix formula
3. Certificate of Compliance for the Asphalt Concrete and the Striping Paint

PART 2 - PRODUCTS

2.01 AGGREGATE BASE

A. Conform to Sections 10-7 and 17-1 of the Standard Specifications.

2.02 ASPHALT CONCRETE

A. Asphalt Concrete shall be Type A, 1/2-inch maximum, medium gradation, conforming to Sections 22-1 thru 22-8 of the Standard Specifications.

B. Commercially available asphalt concrete approved within the last two years for City of Sacramento projects will be considered suitable for work on this project and will not require development of a new job mix formula, provided that the aggregate and asphalt gradations are as specified herein, and the resultant mix has between four (4) and seven (7) percent voids and a stabilometer value of at least 37 when measured in accordance with California Test Method 366.

2.03 STRIPING PAINT

A. Striping paint shall be specifically formulated for use as a traffic lane marking paint to be applied on and compatible with asphalt concrete. Unless otherwise approved, comply with Federal Standard TT-P-115.

PART 3 - EXECUTION

3.01 GENERAL

A. Conform to the aforementioned Standard Specification requirements for furnishing, placing, compacting, and finishing aggregate base and asphalt concrete. Skin patching shall not be used to obtain the specified finish surface tolerance.

B. Installation of striping paint shall comply with the paint manufacturer's instructions.

**** End of Section ****

SECTION 02820

CHAIN-LINK FENCES AND GATES

PART 1 - GENERAL

1.01 SUMMARY

A. Section includes:

1. Fence, framework, fabric, signage, and accessories
2. Excavation for post bases and concrete foundation for posts
3. Gates and related hardware

B. Install new 8-foot tall industrial/commercial quality perimeter chain-link fence with three (3) strands of barbed wire including any gates and necessary hardware at each site.

1.02 REFERENCES

A. The publications referred to hereinafter form a part of this specification to the extent referenced. The publications are referred to in the text by the basic designation only. Unless otherwise indicated, the latest edition of referenced publications in effect at the time of the bid shall govern. In case of conflict between the requirements of this Section and those of the listed documents, the requirements of this Section shall prevail.

American Society of Testing Materials (ASTM)	
ASTM A121	Metallic-Coated Carbon Steel Barbed Wire
ASTM A123	Zinc (Hot-Dip Galvanized) Coatings on Iron and Steel Products
ASTM A153	Zinc Coating (Hot-Dip) on Iron and Steel Hardware
ASTM A385	Standard Practice for Providing High-Quality Zinc Coatings (Hot-Dip)
ASTM A392	Zinc-Coated Steel Chain-Link Fence Fabric
ASTM A702	Steel Fence Posts and Assemblies, Hot- Wrought
ASTM F626	Fence Fittings
ASTM F1043	Strength and Protective Coatings on Steel Industrial Chain Link Fence Framework
ASTM F1184	Industrial and Commercial Horizontal Slide Gates

1.03 SUBMITTALS

A. Submit the following for approval, in accordance with CSSS Section 5-7:

1. Catalog cuts for new fence materials

2. Certification reports that fence posts, hardware, and chain link fabric conform to the specifications herein
3. Layout drawing, hardware, and warranty info for review prior to manufacture

PART 2 - PRODUCTS

2.01 MANUFACTURERS

A. New chain link fence and gates shall be one of the following, or approved equal:
   1. Allied Tube and Conduit.
   2. Master-Halco.

B. Match existing fence materials where re-use is indicated.

2.02 MATERIALS

A. Eight (8) foot tall chain link fence
   1. Fabric shall be Class 1 zinc-coated steel conforming to ASTM A 392 as follows:
      a. Height - 96 inches
      b. Mesh - 2 inches
      c. Wire - 9 gauge, minimum 80,000 pounds per square inch tensile strength
   2. Framework shall be in accordance with ASTM F 1043 Group 1A or 1C. Pipe shall be straight and conform to the following weights:

Pipe Size Outside Diameter (Inches)	Group IA Weight (Lbs/ft)	Group IC Weight (Lbs/ft)
1-5/8	2.27	1.84
1-7/8	2.72	2.28
2-3/8	3.65	3.12
2-7/8	5.79	4.64
3-1/2	7.58	5.71
4	9.11	6.56

   3. Top Rail - 1-5/8-inch outside diameter
   4. Tension Wire - 7-gauge galvanized coil spring wire.
   5. Line Posts - 2-5/8-inch outside diameter
   6. Terminal, corner, and pull posts, including man gate hinge & strike posts
      a. Size - 2-7/8-inch outside diameter
      b. Diagonal braces at terminal, corner and pull posts - 1-5/8-inch diameter
      c. Truss Rods - 3/8-inch diameter, galvanized
      d. Turnbuckles - Heavy duty, galvanized

7. Coatings
    a. Group IA: External coatings in accordance with ASTM F 1043, Type A; Internal coatings in accordance with ASTM F 1043, Type A.
    b. Group IC: External coatings in accordance with ASTM F 1043, Type B; Internal coatings in accordance with ASTM F 1043, Type D.
8. Accessories
    a. Fence fittings shall be in accordance with ASTM F 626.
    b. Post top fittings
        i. Provide post caps sized to post dimension that fit snugly over posts to exclude moisture. Except atop rolling gates where barbed wire is vertical, provide hot dip galvanized steel combination style post caps with 45-degree barbed wire support arms. Provide dome style caps for vertical terminal posts adjacent to the rolling gate.
        ii. Attach post caps with powder actuated Hilti stainless steel fasteners or comparable galvanized 1/4-inch or longer self-tapping Tek-screws.
    c. Rail and brace ends: Provide pressed steel or malleable castings that are cup shaped to receive rail and brace ends.
    d. Where indicated on the Drawings, Contractor shall install fence slats within the fence fabric. Fence slats shall be 8-feet long non-winged PVC slats, forest green in color.
9. Fabric accessories
    a. Wire Clips - Minimum 6-gauge hot-dip galvanized
    b. Tension Bars - 1/4-inch by 3/4-inch, galvanized
    c. Steel Bands - 11-gauge, 1-inch wide, hot-dip galvanized
    d. Bolts and Nuts - 3/8-inch diameter
    e. Hog Rings - 11-gauge
10. Barbed wire (Three strands, 1-foot vertical above top of fabric): Provide Class 3 zinc coated 12.5-gauge wire with four-point round 14-gauge barbs at 5-inch spacing in accordance with ASTM A121.

B. Chain Link Gates
1. Frames shall be 1-7/8-inch outside diameter galvanized steel pipe in accordance with ASTM F 1043 Group IA or IC.
2. Corner fittings shall be Manufacturer's standard heavy pressed steel or malleable castings. Provide gates with diagonal tensioning rods and turnbuckles rigidly attached to gate frame.
    a. Truss Rods - 3/8-inch, galvanized
    b. Turnbuckles - Heavy duty, galvanized
3. Chain link fence fabric

a. Attach to gate frame by use of tension bars and tie wires as specified for fence construction, with tension bars and associated band connectors spaced at approximately 16-inch vertical intervals.

4. Size gate frames to provide no more than a 4-inch clearance below the gate when closed.
5. Gates will be locked closed using padlocks with a minimum 5/16-inch diameter hasp.

C. Man Gates

1. Unless otherwise approved, frames shall be 4-feet wide, 6-feet 8-inches tall, with a 1-foot tall top and bottom rail framed chain-link covered transom above the gate.
2. Barbed wire shall run continuous across the man gate opening.
3. Provide a horizontal mid-height stiffener the same size as the perimeter frame.
4. Hardware
   a. Catch and locking attachment
      i. Commercial grade combination steel or malleable iron catch and locking attachment of acceptable design for use with a padlock.
   b. Provide man gates with minimum three (3) hinges designed to securely clamp to gatepost and permit gate to be swung open 180-degrees.

D. Signage

1. Provide 0.080-inch thick aluminum, nominal 16”x24” rectangular signs in general conformance with the layout drawing provided in the Plans. Signs shall be silk screened onto a reflective background for exterior use, and shall be coated with a UV resistant clear coat to inhibit graffiti. Provide stainless, galvanized, or cadmium coated steel hardware for attachment of the signs to the fencing. Manufacturer shall provide at least a five (5) year warranty.
2. Mount signs on the exterior of the perimeter chain link fence (20 signs are required for this project). Unless otherwise directed or approved, mount the top of signs 6-inches below the top of the chain link fence fabric. Install one sign on each man gate and each length of fencing exposed to public view. Maximum spacing between each sign shall not exceed 50-feet. Existing signage shall be reattached in its original position unless otherwise directed by the Engineer.

2.03 FABRICATION

A. Gate frames shall be welded and galvanized. Unless otherwise approved, shop weld by arc-gas shield method. Provide welds that are smooth and clean. No weld residue will be allowed.

B. Shop Finishing

1. Galvanizing - For items not fabricated of galvanized materials, hot-dip galvanize products after fabrication in accordance with following as applicable:
   a. ASTM A123
   b. ASTM A153

c. ASTM A385

2. Galvanize fabricated items complete, or in largest practicable sections.
3. Provide galvanizing at rate of 2.0-ounces per square foot, minimum.
4. Repair damaged galvanized surfaces and/or welds on pre-galvanized material with a cold applied 2.5 to 3.5-mil dried film thickness of galvanic zinc-rich coating containing ninety-five percent (95%) metallic zinc by weight in the dried film; such as ZRC Galvalite™ as manufactured by ZRC Worldwide, Marshfield, MA or approved equal. Coating shall conform to Federal Specification DOD-P-21035A for repair of hot-dip galvanizing, and shall be applied in accordance with the manufacturer's written instructions.

PART 3 - EXECUTION

3.01 PREPARATION

A. Surface Preparation

1. Perform site grading ahead of post setting to permit grade of fence to remain constant over local elevations or depressions in ground line.

B. Request City surveyor (7-day minimum advanced notice is required) to verify fence alignment to avoid private property encroachments.

3.02 INSTALLATION

A. Chain Link Fences and Gates

1. General

a. Install chain link fence and gates as indicated on the Drawings and as specified herein. Fences shall be plumb, taut, true to line and grade, and complete in all details.

b. Install fencing to generally follow finish grade of ground and provide pull posts at points where required to conform to changes in grade.

c. Installed space between bottom of fence and finish grade shall not exceed 3-inches, and shall not exceed 4-inches below gates.

d. Install fence slats 1-1/2-inches from the ground.

2. Concrete foundations for fence posts

a. Set fence posts centered in concrete foundations spaced not over 10-feet apart, which extend at least 3-feet into ground for line and 4-feet for terminal posts. Place additional posts at each abrupt change in line or change in grade, or as required for gate rail supports. Concrete shall be Class C per CSSS Section 10-5.1.

b. Provide concrete foundations having at least a minimum 12-inch diameter for line posts and 18-inch diameter for terminal posts.

c. Provide foundations that extend a minimum of 2-inches below bottom of posts, and a minimum of 1-inch above finish grade.

d. Finish trowel tops of footings, and slope to drain water away from the posts.

e. Set keepers, stops, sleeves, tracks, eye bolts, and other accessories into concrete as required.

f. Set rolling wheel tracks straight with the bottom of the rail flush with the adjacent finished concrete surface.

3. Post bracing

a. After posts are installed and concrete has set firmly, place top rail, braces, and bottom tension wire approximately 4-inches above grade.

b. End corner, pull, and gate posts

i. Brace with same material as top rail and trussed to line posts with rods and tighteners.

c. Bracing end, corner, slope, and gate posts

i. Brace to midpoint of nearest line post or posts with horizontal braces used as compression members.

d. Then from such line posts truss from brace back to bottom of end, corner, slope, or gate post with 3/8-inch steel truss rods with turnbuckles or other suitable tightening devices used as tension members.

4. Top rail

a. Unless otherwise specified or indicated, install fence with top rail and bottom tension wire.

5. Fabric

a. Place fabric on gates and fence framework on outward side of the posts (away from the well site) and install so that top edge projects over top rail.

b. Stretch fabric taut by means of mechanical fence stretchers to remove slack and securely fasten to posts, top rail, and bottom tension wire. Splice fabric lengths together by reweaving without breaking continuity of knuckled or twisted and barbed selvage.

c. Install tension wire parallel to line of fabric.

d. Fabric: Connect fabric to:

i. Line posts with wire clips minimum every 14-inches.

ii. Terminal, corner, and gate posts with tension bars tied to posts minimum 14-inches on center and with steel bands and bolts and nuts.

iii. Tension wires with hog rings minimum 24-inches on center.

6. Barbed wire:

a. Stretch strands to remove sag and anchor firmly to extension arms.

b. Incline extension arms on line posts away from the well site at approximately 45-degrees.

c. Transition to vertical post extensions adjacent to the rolling gate.

3.03 ADJUSTING

A. All gates shall operate smoothly, with no more than 4-inches clearance below the gate when closed.

B. Remove and replace un-plumb posts and fencing improperly located or not true to line and grade.

C. Padlocks shall be accessible for keyed entry from the street side of the fence.

**** End of Section ****

DIVISION 3 – CONCRETE

SECTION 03100

CONCRETE FRAMEWORK

PART 1 - GENERAL

1.01 DESCRIPTION

A. Work included:

1. Forms shall be designed, constructed, and maintained so as to insure that after removal of forms, the formed concrete will have true surfaces free of offset, waviness or bulges, and will conform accurately to the indicated shapes, dimensions, lines, elevations, and positions.
2. Provide form accessories and openings in forms as required for placement of equipment and materials. Remove forms after concrete has cured.

B. Related Work

1. Section 01330, “Submittals”
2. Section 03150, “Concrete Accessories”
3. Section 03200, “Concrete Reinforcement”
4. Section 03300, “Cast-in-place Concrete”

1.02 REFERENCES

A. The publications referred to hereinafter form a part of this specification to the extent referenced. The publications are referred to in the text by the basic designation only. Unless otherwise indicated, the latest edition of referenced publications in effect at the time of the bid shall govern. In case of conflict between the requirements of this Section and those of the listed documents, the requirements of this Section shall prevail.

American Concrete Institute (ACI)	
ACI 301	Specifications for Structural Concrete for Buildings
ACI 347	Recommended Practice for Concrete Formwork
ACI P4	Publication 4, Formwork for Concrete

City of Sacramento (CSSS)	
CSSS 20-4	Forms for Structures
CSSS 20-5	Removal of Forms

U.S. Department of Commerce, National Bureau of Standards Publications	
PS1	Construction and Industrial Plywood

National Forest Products Association (NFPA)
National Design Specification for stress grade lumber and its fastening

West Coast Lumber Inspection Bureau (WCLB)	
Std. No. 16	Standard Grading and Dressing Rules for Douglas Fir, Western Hemlock, Western Red Cedar, White Fir, and Sitka Spruce Lumber.

Western Wood Products Association (WWPA):
Western Lumber Grading Rules

1.03 SUBMITTALS

A. Submit for approval in accordance with Section 01330, “Submittals”.

B. Shop Drawings

1. Formwork

   a. Before starting concrete work, submit drawings of all formwork showing form plywood patterns, formwork, ties, vertical limits of concrete placements, horizontal lifts, and construction joints.

2. Shoring

   a. If shoring the excavation is required due to proximity of the proposed facility to the Sacramento River levee and residential improvements, or for any other reason, submit drawings and structural calculations showing members, connections, and anchorage of the proposed shoring system. Calculations and drawings shall be stamped by a Civil Engineer currently licensed in the State of California.

PART 2 - PRODUCTS

2.01 FORM MATERIALS

A. Plywood - PS 1, B-B Plyform Class 1, EXT-APA, edge-sealed, 5/8-inch thick when studs are spaced 12-inches on center and 3/4-inch thick when studs are spaced 16-inches on center.

B. Wood strips for forming reveals, chamfers and quirks: Any close grain hardwood or softwood, free of knots.

C. Framing Lumber - Douglas Fir "Standard" grade, sized to uniform width and depth

D. Sheathing - Douglas Fir "Construction" grade boards and sheathing, 10-inch maximum width

2.02 FORM ACCESSORIES

A. Form Ties

1. Ties shall be adjustable type, arranged to leave no metal within 1" of surface. They shall have no lugs, cones, or other devices that will leave holes larger than 1" diameter in exposed concrete surfaces. Spreaders shall be either type designed for use with approved clamps of separate metal spreaders. Do not use wood spreaders or wire ties.

B. Form Coatings

1. Burke Concrete Accessories, Inc.'s "Burke Release", Nox-Crete, or approved equal. Apply per manufacturer's printed instructions.

PART 3 - EXECUTION

3.01 GENERAL

A. Provisions for work of other Sections

1. Provide openings for mechanical and electrical work and work of other Sections. Place items to be incorporated in concrete and support on formwork. Seal forms around openings to prevent concrete seepage.

B. Design and erection of formwork, shoring and falsework

1. The design and engineering of all formwork, falsework and shoring, as well as its construction and protection, is the Contractor's responsibility. Conform to ACI 347 unless otherwise directed or approved.

C. Exposed-to-view concrete

1. Deflection of facing materials between studs, as well as deflection of studs and walers, shall be limited to 3/64 of an inch or 0.004 times the span length, whichever is the larger, at the midpoint between supports.

3.02 CONSTRUCTION TOLERANCES

A. Construct forms to provide concrete conforming to dimensions shown, and to tolerance limits listed in ACI 301 "Specifications for Structural Concrete for Buildings".

3.03 INSTALLATION

A. Installation shall conform to ACI 301, 347, P4 and CSSS 20-3. Design forms for easy removal. Do not pry against face of concrete. Use wooden wedges only. In order that reused forms will not contain patches resulting from alterations, forms for concrete exposed-to-view shall be reused only on identical sections.

Forms will not be used if there is any evidence of surface wear or tear which would impair the quality of the exposed-to-view concrete. Forms shall be thoroughly cleaned and re-lubricated before reuses. Formwork for exposed-to-view concrete shall be observed continuously while concrete is being placed to see that there are no changes of elevation, plumbness, or camber. If, during construction, any weakness develops and the falsework shows any undue settlement

or distortion, the work shall be stopped, the affected construction removed, if permanently damaged, and the falsework strengthened.

3.04 CONSTRUCTION AND SURFACE FINISH

A. Forms shall be substantial, true to line and level, sufficiently tight to prevent leakage and shall conform to indicated dimensions. Locate form ties for exposed concrete in straight horizontal and vertical lines and as indicated on Drawings and specified herein. Provide cleanout holes at bottom of forms. Remove debris before concrete is placed. Construct forms for exposed surfaces so that joints in forms are either horizontal or vertical and are located to the pattern indicated.

   External corners on all concrete shall be formed with chamfer strips in corners of forms to form bevel at external angles. All form joints in forms for exposed-to-view concrete shall be sealed with specified form tape to prevent leakage. Camber soffits to accommodate anticipated deflections caused by wet concrete and construction loads. Provide positive means of adjustment for shores and struts. Take up settlement as concrete is placed.

3.05 REMOVAL AND REUSE

A. Removal of forms shall conform to CSSS 20-4 and as specified herein. Remove forms, shoring and bracing carefully to avoid damage to fresh concrete, but not before concrete is capable of self-support and support of construction loads. Do not pull tie rods until concrete is hard enough to permit withdrawal without damage to concrete. Pull ties that are entirely withdrawn from wall toward inside face. When forms are removed during specified curing period, cure the concrete as specified in Section 03300, “Cast-in-Place Concrete”.

   Regardless of strengths attained by concrete, leave forms in place for following periods when supporting:

   1. Vertical Surfaces - Three (3) days minimum
   2. Slabs - Seven (7) days minimum
   3. Beams and Girders - Fifteen (15) days minimum, but do not remove vertical support until concrete has reached its 28-day strength

B. Before reuse of plywood forms, thoroughly clean, sand, and recoat them with form coating. Do not reuse plywood that has torn grain, patches, worn edges, damaged phenolic resin covered surfaces, or other defects which would impair texture of finished surface. Other wood forms shall be prepared for reuse by thorough cleaning and recoat with form coating. Repair damaged forms and replace loose or damaged boards.

3.06 SHORING

A. Live loading of new construction while reshoring is under way is not permitted. Do not over stress new construction by over tightening reshores. Leave reshores in place until concrete has reached its specified 28-day strength. Reshore floors that support shores under wet concrete, or leave original shores in place. Reshores shall have at least half the capacity of the shores above and be distributed in approximately the same pattern. Leave these reshores in place until freshly placed concrete has reached seventy-five percent (75%) of its specified 28-day strength.

3.07 MATERIAL APPLICATION

A. Concrete exposed-to-view in completed structures

1. Use specified "B-B" or better plyform plywood or phenolic resin covered form board.

B. Concealed concrete

1. Forms for concrete surfaces not visible in completed structure: Plywood, lumber or steel is acceptable. Footings may be poured directly against earth banks where soil conditions are such that vertical banks will remain stable during placing operations. Earth forms at walls are not permitted.

**** End of Section ****

SECTION 03150

CONCRETE ACCESSORIES

PART 1 - GENERAL

1.01 SUMMARY

A. Section includes:

1. Waterstops
2. Preformed expansion joint material

1.02 REFERENCES

A. The publications referred to hereinafter form a part of this specification to the extent referenced. The publications are referred to in the text by the basic designation only. Unless otherwise indicated, the latest edition of referenced publications in effect at the time of the bid shall govern. In case of conflict between the requirements of this Section and those of the listed documents, the requirements of this Section shall prevail.

American Society of Testing Materials (ASTM)	
ASTM D570	Test Method for Water Absorption of Plastics
ASTM D624	Test Method for Tear Strength of Conventional Vulcanized Rubber and Thermoplastic Elastomers
ASTM D638	Test Method for Tensile Properties of Plastics
ASTM D746	Test Method for Brittleness Temperature of Plastics and Elastomers by Impact
ASTM D747	Test Method for Apparent Bending Modulus of Plastics by Means of a Cantilever Beam
ASTM D792	Test Methods for Density and Specific Gravity (Relative Density) of Plastics by Displacement
ASTM D2240	Test Method for Rubber Property - Durometer Hardness

U. S. Army Corps of Engineers (U.S.ACOE)	
CRD-C-572	Polyvinylchloride Waterstop

1.03 SUBMITTALS

A. Product Data

1. Submit data of complete physical properties for polyvinyl chloride waterstops.
2. Preformed Expansion Joint Material - Submit sufficient information on each type of

material for review to determine conformance of material to requirements specified.

B. Samples - Submit samples of polyvinyl chloride waterstop.

C. Laboratory Test Reports - Submit reports indicating that average properties of polyvinyl chloride waterstops material and finish conform to requirements specified in this Section.

D. Quality Control Submittals

1. Certificates of Compliance - Submit written certificates that polyvinyl chloride waterstops supplied on this project meet or exceed physical property requirements of current U.S.ACOE CRD-C-572.

2. Manufacturer's Instructions - Submit instructions for materials specified in this Section that are specified to be installed with such instructions.

1.04 QUALITY ASSURANCE

A. Mock-ups

1. Welding Demonstration

a. Demonstrate ability to weld acceptable joints in polyvinyl chloride waterstop before installing waterstop in forms.

b. Quality of welded joints will be subject to acceptance of the Engineer.

PART 2 - PRODUCTS

2.01 MATERIALS

A. Waterstops

1. Material and Type

a. Provide polyvinyl chloride waterstops. Ribbed type waterstops will not be allowed.

2. Manufacturers (one of the following, or approved equal)

a. Vinylex Corporation.

b. Greenstreak Plastic Product Division of Western Textile Products Company.

3. Polyvinyl Chloride Waterstops

a. Unless otherwise specified or indicated on the Drawings, provide following types:

i. Six inch (6") flat dumbbell type in construction and contraction joints

ii. Nine inch (9") wide dumbbell with one inch (1") diameter hollow center bulb in expansion joints

b. Provide polyvinyl chloride waterstop complying with following requirements:

Physical Characteristics	Test Method	Required Results
Specific Gravity	ASTM D792	Not less than 1.3

Hardness	ASTM D2240	70 to 90 Type A Shore durometer
Tensile Strength	ASTM D638	Not less than 2,000-pounds per square inch
Ultimate Elongation	ASTM D638	Not less than 350-percent
Alkali Extraction	CRD-C-572	7-day weight change between minus 0.1-percent and plus 0.25-percent
Low Temperature Brittle Point	ASTM D746	Not more than minus 35-degrees Fahrenheit
Water Absorption	ASTM D570	Not more than 0.15 percent after 24-hours
Accelerated Extraction Tensile	CRD-C-572	Not less than 2,000-pounds per square inch
Stiffness in Flexure	ASTM D747	Not less than 750-pounds per square inch
Tear Resistance	ASTM D624	300-pounds per inch

Weight/Size Requirements	
6-inch Waterstops	Weigh not less than 130-pounds per 100-linear feet
9-inch Waterstops	Weigh not less than 220-pounds per 100-linear feet
Thickness	3/8-inch
Center Bulb	1/2-inch nominal outside diameter

Allowable Tolerances	
Width	Plus or minus 3/16-inch
Thickness	Plus or minus 1/32-inch

B. Pre-Formed Expansion Joint Material

1. Material - Use synthetic sponge rubber or bituminous fiber types as specified in this Section.
2. Use specific type in any application as indicated on the Drawings.
3. Thicknesses and dimensions of materials shall be as indicated on the Drawings or as required according to the way joint material is used.
4. Sponge Rubber Type shall be from one of the following manufacturers, or approved equal:
    a. Tammstech, Inc., Cementone
    b. Burke Concrete Accessories Inc., Neoprene Sponge Rubber Expansion Joint
5. Bituminous Fiber Type shall be from one of the following manufacturers, or approved equal:
    a. Tammstech, Inc., Hornboard/fiber
    b. Burke Concrete Accessories Inc., Fiber Expansion Joint

2.02 MANUFACTURED UNITS

A. Polyvinyl Chloride Waterstops: Provide waterstops manufactured from virgin polyvinyl chloride plastic compound that does not contain any scrap or reclaimed material.

PART 3 - EXECUTION

3.01 INSTALLATION

A. Waterstops

1. Install waterstops in concrete joints where indicated on the Drawings.
2. Carry waterstops in walls into lower slabs and join to waterstops in slabs with appropriate types of fittings.
3. In water-bearing structures, provide all joints with waterstops, whether indicated on the Drawings or not.
4. Provide waterstops that are continuous.
5. Set waterstops accurately to position and line as indicated on the Drawings.
6. Hold and securely fix edges in position at intervals of not more than twenty-four inches (24") so that they do not move during placing of concrete.
7. Do not drive nails, screws, or other fasteners through waterstops in vicinity of construction joints.
8. Use wires at not more than twenty-four inches (24") on centers near outer bulbs to tie waterstops into position.
9. Special clips may be used in lieu of wires, at Contractor's option.
10. Terminate waterstops three-inches (3") from top of finished surfaces of walls and slabs unless otherwise specified or indicated on the Drawings.
11. Polyvinyl Chloride Waterstops
    a. Install waterstops so that joints are watertight.
    b. For joints such as unions, crosses, ells, and tees, field weld with thermostatically controlled equipment recommended by waterstop manufacturer.
    c. Split type waterstop will not be permitted except where specifically indicated on the Drawings.

B. Joints

1. Construct expansion, contraction, and construction joints as indicated on the Drawings.
2. Preformed Expansion Joint Material: Fasten expansion joint strips to concrete, masonry, or forms with adhesive. No nailing will be permitted, nor shall expansion joint strips be placed without fastening.

**** End of Section ****

SECTION 03200

CONCRETE REINFORCEMENT

PART 1 - GENERAL

1.01 DESCRIPTION

A. Provide reinforcing steel as shown on the Plans.

B. Related Work

1. Section 01330, “Submittals”
2. Section 03100, “Concrete Formwork”
3. Section 03150, “Concrete Accessories”
4. Section 03300, “Cast-in-Place Concrete”

1.02 REFERENCES

A. The publications referred to hereinafter form a part of this specification to the extent referenced. The publications are referred to in the text by the basic designation only. Unless otherwise indicated, the latest edition of referenced publications in effect at the time of the bid shall govern. In case of conflict between the requirements of this Section and those of the listed documents, the requirements of this Section shall prevail.

American Concrete Institute (ACI)	
ACI 318	Building Code Requirements for Reinforced Concrete
ACI SP-66	ACI Detailing Manual

City of Sacramento (CSSS)	
CSSS 10-25	Reinforcing Steel
CSSS 21	Placing Steel Reinforcement

American Welding Society (AWS)	
AWS D12.1	Welding Reinforcing Steel, Metal Inserts and Connections in Reinforced Concrete Construction

Concrete Steel Reinforcing Institute (CRSI)	
1MSP	Manual of Standard Practice (1997)
1SPLBK	Reinforcement Anchorages and Splices (1997)
1DET	Reinforcing Bar Detailing (2000)

1PLACE	Placing Reinforcing Bars (1997)

1.03 SUBMITTALS

A. Shop Drawings

1. Reinforcing Steel

a. Before starting concrete work, submit shop drawings in accordance with Section 01330, “Submittals”. Comply with requirements of ACI 318, ACI SP-66, CRSI 1MSP, CRSI 1SPLBK, and CRSI 1DET. Show bar size, dimensions, bends, placing, and construction joint details. Submit drawing showing locations of any construction joints not shown on the plans. Maximum submittal drawing size shall be 22-inches by 34-inches. Submit type, size, and location of all slab and bar supports. Hooks, lap splices, bends and offsets shall be in accordance with the drawings. Obtain approval before shop fabrication.

B. Certificates of Compliance

1. Submit Certificate of Compliance stating that reinforcement complies with specified requirements. Reinforcing steel shall be properly identified. Contractor shall bear costs for test of steel by an approved laboratory if the reinforcing steel is not properly identified.

PART 2 - PRODUCTS

2.01 MATERIALS

A. General

1. Conform to CSSS Section 10-23 except as modified herein. All materials covered by this Section shall be manufactured in the United States.

B. Supports for Reinforcing Bars

1. Galvanized steel chairs and accessories or plastic coated units for work exposed to view, weather, or moisture so that finished surfaces will not be marred or stained; use precast concrete only (no metal), suitably sized for load distribution, in slabs-on-grade. Use no supports of wood or other cellulose material. Do not expose supports or accessories to view in architectural concrete.

PART 3 - EXECUTION

3.01 VERIFICATION OF CONDITIONS

A. Prior to installation of reinforcing steel work, Contractor shall inspect surfaces to receive work, and arrange for satisfactory correction of defects in workmanship and material that could have an adverse effect on reinforcing steel work.

3.02 FABRICATION AND DELIVERY

A. General

1. Conform to CSSS Section 21 except as modified herein.

B. Bending and Forming

1. Fabricate indicated size bars into shapes and lengths shown on approved shop drawings by methods not injurious to materials. Do not heat reinforcement for bending. Bars with kinks or bends not in schedule will be rejected.

C. Marking and Shipping

1. Bundle reinforcement and tag with suitable identification to facilitate sorting and placing, and transport and store at site so as not to damage material.

3.03 INSTALLATION

A. Conform to CSSS Section 21, CRSI 1MSP, and CRSI 1PLACE except as modified herein.

1. Reinforcement Welding - Where reinforcement welding is approved by the Engineer, perform welding by direct electric arc process, with trained and experienced certified operators. Conform to AWS D12.1. Use low-hydrogen electrodes. Do not tack weld reinforcing bars.
2. Preparation - Clean surfaces to be welded of loose scale and all foreign material. Clean welds each time electrode is changed. Chip burned edges clean before welds are deposited.

B. Characteristics of Welds

1. When brushed with wire brushes, completed welds shall exhibit uniform section, smoothness of welded metal, feather edges without undercuts or overlays, freedom from porosity and clinkers, and good fusion with penetration into base metal. Cut out welds, or parts of welds found defective, and replace with proper welds.

C. Concrete Pours

1. At each location during concrete placing, inspect reinforcement and maintain bars in correct positions. Templates to maintain the correct position of reinforcing may be required. Contractor shall install templates, if required by the inspector, at no additional cost to the City.

D. Contractor shall receive approval in writing from the Engineer of all reinforcing work prior to ordering concrete for placement.

**** End of Section ****

SECTION 03300

CAST-IN-PLACE CONCRETE

PART 1 - GENERAL

1.01 DESCRIPTION

A. Scope of Work

1. Unless otherwise directed, provide concrete as specified herein.

B. Related Work

1. Section 01330, “Submittals”
2. Section 03100, “Concrete Formwork”
3. Section 03200, “Concrete Reinforcement”

1.02 REFERENCES

A. The publications referred to hereinafter form a part of this specification to the extent referenced. The publications are referred to in the text by the basic designation only. Unless otherwise indicated, the latest edition of referenced publications in effect at the time of the bid shall govern. In case of conflict between the requirements of this Section and those of the listed documents, the requirements of this Section shall prevail.

American Concrete Institute (ACI) Standard	
ACI SP-15	Field Reference Manual: Standard Specifications for Structural Concrete with Selected ACI and ASTM references
ACI 211	Recommended Practice for Selecting Proportions for Concrete
ACI 301	Structural Concrete for Buildings
ACI 302	Guide for Concrete Floor and Slab Construction
ACI 304	Recommended Practice for Measuring, Mixing and Placing Concrete
ACI 305	Hot Weather Concreting
ACI 306	Cold Weather Concreting
ACI 309	Consolidation of Concrete
ACI 318	Building Code Requirement for Reinforced Concrete, with Commentary

American Society for Testing and Materials (ASTM)	
ASTM C31	Method of Making and Curing Concrete Test Specimens
ASTM C33	Concrete Aggregates

ASTM C39	Compressive Strength of Cylindrical Concrete Specimens
ASTM C94	Ready Mixed Concrete
ASTM C143	Slump of Portland Cement Concrete
ASTM C150	Portland Cement
ASTM C171	Sheet Materials for Curing Concrete
ASTM C172	Method of Sampling Freshly Mixed Concrete
ASTM C192	Making and Curing Concrete Test Specimens in the Laboratory
ASTM C227	Test for Potential Alkali Reactivity of Cement-Aggregate Combinations
ASTM C231	Air Content of Freshly Mixed Concrete by the Pressure Method
ASTM C260	Air Entraining Admixture for Concrete
ASTM C289	Test of Potential Reactivity of Aggregates
ASTM C295	Petrographic Examination of Aggregates
ASTM C309	Liquid Membrane Forming Compounds for Curing Concrete
ASTM D98	Calcium Chloride
ASTM D1785	Poly (Vinyl Chloride) PVC Plastic Pipe, Schedules 40, 80 and 120

City of Sacramento (CSSS)	
Section 10	Construction Materials
Section 20	Concrete in Structures

1.03 CONDITIONS

A. Notes pertaining to concrete on the Plan sheets are a part of these Specifications.

B. Testing shall comply with the General and Special Conditions.

1.04 SUBMITTALS

A. Manufacturer's Data

1. Proposed mix designs, including admixtures
2. Curing Material

B. Certificates:

1. Submit Certificate of Compliance that concrete meets the specified requirements.
2. Delivery tickets for all concrete delivered to the project site.

PART 2 - PRODUCTS

2.01 MATERIALS

A. Portland Cement - ASTM C150, Type II or Type III.

   1. Concrete - Standard gray cement (use same brand for surfaces not to be painted)

B. Water - Clean and free of substances injurious to concrete

C. Aggregate

   1. Do not use aggregates that are alkali reactive when tested by ASTM C227, C289, or C295.
   2. Unless otherwise noted, maximum coarse aggregate size shall be 1-1/2-inches for walls and slabs greater than or equal to 12-inches thick, and 1-inch for walls and slabs less than 12-inches thick.
   3. Provide hard, washed, fine and coarse aggregates conforming to ASTM C33, including requirements for sampling and testing, except that loss after 500 revolutions in Los Angeles machine shall not exceed forty percent (40%). Limit material finer than No. 200 sieve to a maximum of three percent (3%) of the fine aggregate.

D. Non-Shrink Grout - Master Builders premixed "Embeco", Burke's "Metallic Grouting Compound"; Sonneborn-Desoto "Ferrolith-G", or approved equal

E. Curing materials

   1. Liquid Curing Compound - ASTM C309, Type 1 (Clear) containing a fugitive dye
   2. Sheet Material - Double-layered, reinforced, stain proof, waterproofed Kraft paper, ASTM C171, regular type

F. Admixtures

   1. General
      a. Provide only as indicated below. Submit manufacturer's data for admixtures, and use only those approved by Engineer. Use shall be in accordance with the manufacturer’s recommendations.
   2. Water Reducing - "Plastocrete", Sika Chemical Corporation; "WRDA with Hycol", W.R. Grace, or approved equal. Conform to ASTM C49A, Type A (use in all mixes)
   3. Retarding - "Plastiment", Sika Chemical Corporation, or approved equal (use for hot weather concreting only)

G. Concrete Overlay Bonding Materials - Burke Acrylic Bondcrete or approved equal

2.02 DESIGN OF MIXES

A. General

   1. The Contractor shall be responsible to design concrete mixtures resulting in the required 28-day compressive strength and other required characteristics. An approved laboratory shall design all mixes. Comply with ACI 211 "Recommended Practice for Selecting Proportions for Concrete" and ACI 304 "Recommended Practice for Measuring, Mixing and Placing Concrete" to produce plastic, workable mixture suitable

for concrete work indicated, which will develop required compressive strengths, as indicated.

B. Mix for conduit encasement

1. Concrete mix shall be Class D and contain a minimum of five (5) sacks (470 pounds) of Portland cement per cubic yard. The maximum water/cement ratio shall be 0.50. The Contractor shall add red oxide, in the amount of 5-lbs per cubic yard, to all concrete used for conduit encasement.

C. Mix for antenna foundations, generator pads, building foundations and housekeeping pads, retaining walls, and footings

1. Concrete mix shall be Class B and contain a minimum of six (6) sacks (564 pounds) of Portland cement per cubic yard. The compressive strength at 28 days shall be 4,000 psi. The maximum water/cement ratio shall be 0.50.

D. The maximum slump for concrete shall be 4-inches. A tolerance of one-inch above the maximum slump will be allowed, provided that the average of all batches is less than the specified maximum slump. Batches of concrete with slumps in excess of those specified will be rejected if their frequency of occurrence is excessive or the Contractor fails to take corrective action to reduce their occurrence. No water shall be added to the approved mix after batching except as approved by the Engineer.

E. Batching and mixing

1. Use transit-mixed concrete from approved batch plant. Batching, mixing, and transportation of concrete shall conform to ASTM C94.

PART 3 - EXECUTION

3.01 PREPARATION

A. Embedded Items

1. Includes installation of work built into concrete such as waterstop sleeves, anchor bolts, wood nailers, reglets, frames and sleeves for piping, conduit and fittings specified under other divisions. Provide facilities and supervision required for installation of inserts specified under other Sections, and perform cutting and reinforcing of forms required to accommodate them. Do not place any concrete until all inserted items are installed in their proper locations, secured against displacement, cleaned, inspected and approved. Furnish ties and supports necessary to keep embedded items in place when concrete is placed.

B. Clean Up

1. Remove excess water from forms before concrete is deposited. Remove hardened concrete, debris, and foreign materials from interior of forms and from surfaces of mixing and conveying equipment.

C. Wetting

1. Prior to placing concrete, wet wood forms sufficiently to tighten up cracks. Wet all other materials sufficiently to reduce suction and maintain concrete workability.

D. Earth or Gravel Subgrade

1. Lightly dampen subgrade no more than 24-hours in advance of concrete placement, but do not muddy. Reroll where necessary for smoothness and remove loose earth material.

E. Screeds (Flatwork)

1. Set screeds at walls and at maximum of 8-foot horizontal distance between adjacent screeds.

F. Weather

1. Do not place concrete during rainy weather unless approved measures are taken to prevent damage to concrete. Cure concrete placed during periods of dry winds, low humidity, high temperatures and other conditions causing rapid drying, initially with a fine fog spray of water applied immediately after finishing and maintained until final curing operations are begun. Comply with the following:
    a. Hot weather: ACI 305
    b. Cold weather: ACI 306

G. Pumping Concrete

1. Maintain close observation of ambient temperature both at pump location and at discharge end. Allow for wide variance of temperature change.

3.02 FLATNESS TOLERANCE FOR FLOOR SLABS

A. Slabs (Flatwork) Interior and Exterior

1. Finish slabs monolithically. Uniformly slope floor slabs to provide positive draining of indicated areas. Special care shall be taken so that a smooth, even joint is obtained between successive pours.
2. Finished surfaces shall be true plane surfaces with no deviation in excess of 1/8-inch in 10-feet when tested with a straight edge.
3. Replace or repair any slab which fails to meet this standard. If slabs fail to drain as indicated, remove drains and faulty floor section and refinish topping so that it drains according to the Drawings. No deviations will be allowed.

3.03 PLACING

A. Formed Concrete

1. Place concrete after subgrade, forms, and reinforcement has been approved. Limit free vertical drop in concrete walls or columns to three (3) feet. In other concrete, limit the drop to five (5) feet. Deposit concrete in horizontal layers not more than 18-inches deep and continue pouring until section is completed. Control rate of pouring and depth of layers so that each layer will be covered within one hour after it is poured. Pour columns to top and allow to settle two (2) hours before additional concrete is placed. Place concrete continuously between pour joints.

B. Grouting

1. Grout mix shall be regular concrete mix with one-half the large aggregate omitted. Use to cover the following before additional concrete is placed:

a. Flat form surfaces next to congested steel

b. Construction joints

c. Top of column and wall footings

d. On surfaces where concrete has set

C. Vibration and Tamping

1. As concrete is placed in forms, work concrete around reinforcing steel, built-in items and into corners and angles. Extra care shall be given to work architectural concrete around inserts, reveals, quirks, corners and plastic cones of ties to preclude rock pockets, air pockets, and other defects, and to produce sharp corners, edges and smooth surfaces. Provide mechanical vibrators operated by experienced employees for agitating concrete in forms. Vibrate thoroughly within five (5) minutes after layer is placed. Carry vibration well into previous layer. Vibrators shall not be used to transport concrete inside forms. Internal vibrators shall maintain a speed of not less than 7,000 impulses per minute when submerged in concrete. Supplement vibration by suitable methods to eliminate voids along forms for full depth of layer as directed. Do not allow vibrators to strike overlaid plywood surfaces. Do not use vibrators to work concrete along forms. Keep at least one spare vibrator on job at all times while concrete is being placed. Comply with ACI Committee 309 consolidation of Concrete, Committee Report.

D. Stoppage

1. Upon completion of a pour and after concrete has partially hardened, wash scum or laitance off surface with stiff brush and stream of water. When work is resumed, brush clean with wire brushes or sandblast, then place fresh concrete.

E. Pumped Concrete

1. Do not place concrete by pumping without prior written approval of the Engineer.

2. Do not use aluminum or aluminum lined pipe. Prevent concrete from contacting aluminum fittings.

3. Do not add more water to mix unless approved by the Engineer. Check that the mix design entered on delivery ticket complies with that ordered.

4. Use only piston type pumps. Insure they are reversible. Make a standby pump available of no less capacity than that in use for operation at the job within one hour's notice.

3.04 CONSTRUCTION JOINTS

A. The location and design of joints not shown or specified are subject to approval of the Engineer prior to placement of concrete.

B. Horizontal Joints

1. Where joints occur in exposed concrete, set smooth painted wood strips in form to provide a straight and level joint in which upper pour laps lower pour. Place concrete level with, but not above top of pour joint strip as shown on Drawings. Allow 24-hours before concrete is placed over horizontal joints. Remove loose material and laitance. Clean by sandblasting, or wire brushing. Allow enough time between placing of adjacent pour sections to provide for initial shrinkage. Horizontal joints will not be

allowed in beams, girders and slabs unless otherwise indicated.

C. Vertical joints

1. Vertical joints not shown on the Drawings shall be so made and located as to least impair the strength of the structure and shall be approved by the Engineer prior to placement of concrete.

3.05 REPAIRS AND PATCHING

A. Patch defective areas immediately following form removal. Remove honeycombed and other defective concrete to sound concrete, but not less than 1-inch deep. Make the walls of the cut area perpendicular to the surface. Do not feather out the edges. Dampen the patch area and the adjacent area six (6) inches around the patch area.

B. For exposed concrete prepare a patching mortar of one part Portland cement adjusted to match the color of the surrounding concrete and 2-1/2 parts sand with the least water required to produce a workable mass. Rework this mortar until it is the stiffest consistency that will permit placing. Brush the patch area with a bond of neat cement and water paste and apply patching mortar when the water sheen is off the bond. Strike off the mortar slightly higher than the surrounding surface, let set for one hour and finish flush with the surrounding surface. Tie holes shall be cleaned, dampened and filled solid with the above specified patching mortar.

3.06 FINISHING FORMED SURFACES

A. Finish formed surfaces by removing any and all fins. The tolerances of finished formed surfaces shall conform to ACI 301.

3.07 FLATWORK

A. Place floor slabs on grade in alternate strips. Place each unit against construction joint forms with formed control joints perpendicular to the poured strips. Pour slabs-on-grade against a moist subgrade. Wet the subgrade the day before placing concrete. Moisten subgrade just ahead of concrete as it is placed. Do not place concrete in standing water. Provide new, clean cut, sharp-edged wood headers at construction joints of suspended slabs. Deposit concrete evenly, consolidated with mechanical vibrators, particularly at side forms, and screed to indicated elevations and contours. Maintain full indicated thickness of slab over all parts of cambered support. Concrete shall be compacted with a grid tamper to eliminate voids and pockets and to produce a uniformly dense slab. Where ground slabs are left to receive deferred finishes, provide protection against contamination from time of placing concrete until time of placing finish. Remove contamination mechanically leaving a clean surface.

B. Joint location and detail shall be as indicated. Tooling is required at control and pour joints.

1. Control Joints

a. After concrete surface is screeded, cut concrete with a cutting bar, or other approved tool, approximately 1/4" thick x 2" deep. Form straight clean lines. After slot is formed in stiff concrete, insert 1/8" thick x 1-1/2" strip of tempered hardboard or plastic joint form zip strip. Butt strips neatly to line and flush with concrete surface. Finish slab flush with top of hardboard strips without tooling.

2. Construction Joints

a. Form construction joints with 2-inch nominal dressed lumber, or approved steel forms. Provide enough stakes to prevent sagging and misalignment under construction loads. Leave forms in place as long as possible and remove without chipping the edge of the slab. Protect the slab edge until the adjacent slab is placed.

3. Expansion Joints

a. Provide sponge neoprene joint filler where shown on the Drawings. Place filler to provide space for sealant as indicated. Seal joints with specified sealant per manufacturer's printed instructions. Thickness of filler material is indicated.

C. Slab Finishing

1. Contractor shall apply a medium broom finish just after final troweling to all flat slabs not specified to receive another finish.

2. Where wood float finish is indicated, screed slabs to elevations indicated. Compact with motor driven disk type compactor float and bull float to smooth, even surface. Perform final finishing with wood hand floats to give finished surface uniform, slightly roughened texture.

3. Where steel trowel finish is indicated, tamp fresh concrete with a grid tamper enough to raise a thin bed of mortar to surface. Before finishing, remove any excess water. Level and compact with motor drive disk type compactor float. Immediately after floating, the surface shall be further leveled and compacted with a motor driven rotary trowel with flat-pitched blades. Final troweling shall be done with steel hand trowel after surfaces have become hard enough to produce a hard, dense, smooth, burnished surface.

3.08 CURING AND PROTECTING

A. Do not use any curing method which will be incompatible with the specified applied finishes.

B. Initial Curing

1. Begin initial curing with water immediately after the final finishing operation. Keep the concrete continuously wet at least overnight. Use one of the final curing methods.

C. Final Curing

1. Water or Paper Curing (mandatory for bridge slabs) - Where water curing is used, keep surfaces continuously wet for seven (7) days. Where paper curing is used, keep the paper in place without torn areas for at least ten (10) days. Seal all joints in paper with a suitable waterproof cement or tape.

2. Mandatory Hot/Dry Weather Curing - Use water curing for the first 24-hours of the required curing period.

3. Optional Curing - Surfaces not specified to receive a mandatory curing method may be cured by water, membrane, or paper curing. Use clear curing compound for all membrane curing and paper curing. Water and paper curing to be as specified above.

D. Formed Surfaces

1. Wood forms left in place during the final curing period shall be kept tight, wetting if necessary. If forms are removed during the curing period, one of the specified curing methods, as approved by Inspector, shall be applied immediately and continued for the

remainder of the curing period.

3.09 MISCELLANEOUS

A. Grouting and Drypacking

1. Grout - One (1) part cement, two (2) parts sand, and sufficient water that the grout will just flow under its own weight. Water reducing and workable agent may be added at the Contractor's option.
2. Drypack - One (1) part cement, two (2) parts sand, with just enough water to bind the materials together.
3. Installation - Dampen surfaces before grouting and slush with neat cement. Force grout into place and rod so as to fill all voids and provide uniform bearing under plates. Provide smooth finish on exposed surfaces and damp cure for at least three (3) days.

B. Non-shrink grout

1. Mix and place under structural steel base plates in accordance with manufacturer's printed instructions.

C. Concrete Overlay Bonding

1. The surface of the existing concrete is to be roughened by sandblasting to remove loose material, rust and oils. Sufficient cement matrix should be removed to expose surface aggregates and to form a roughened surface for bonding. Clean with a high pressure water jet and allow to surface dry. Immediately apply an acrylic bonding agent such as Burke Acrylic Bondcrete at the rate of 200-square feet per gallon and follow with placement of the concrete overlay after a minimum of one hour and after the film is dry to the touch. Install bonding agent in strict accord with manufacturer's instructions.

3.10 QUALITY CONTROL

A. The Engineer shall be responsible for the routine quality control testing of concrete mixes.

B. Slump Test

1. Slump test shall be performed at the job site by the Engineer in accordance with ASTM Test Method C 143.

C. Compressive Strength Tests

1. Each day concrete is poured, the Engineer shall mold four concrete test cylinders in accordance with ASTM C31. City shall pay for the service of an independent testing company to cure and test the concrete cylinders in accordance with ASTM C39 and C172 unless samples fail to meet requirements, in which case Contractor shall pay for retesting done to the same requirements. Cylinders shall be tested at 7 days, 14 days, 21 days, and 28 days.

D. The Contractor shall assist the Engineer in obtaining samples of fresh concrete.

E. Methods of sampling and testing concrete mixtures shall include but not be limited to the following:

American Society of Testing Materials (ASTM)

Composite Samples	ASTM C172.
Specimen Preparation	ASTM C31.
Compressive Strength	ASTM C39.
Air Content	ASTM C173 or C231.
Slump	ASTM C143.
Unit Weight	ASTM C138

F. Evaluation and acceptance of concrete and concrete structures shall be in accordance with Chapters 17 and 18 of ACI 301.

** **End of Section** **

DIVISION 4 – MASONRY (Not Used)

DIVISION 5 – METALS

SECTION 05080

MECHANICAL ZINC COATING

PART 1 - GENERAL

1.01 DESCRIPTION

A. Work Included

1. This Section specifies mechanically applied zinc coating. This coating shall be used on steel fasteners including bolts, screws, nuts and washers. Electroplated corrosion protection is not an acceptable substitute for mechanical zinc coating.

1.02 QUALITY ASSURANCE

A. Zinc Coating Thickness

1. Coating thickness shall be Class 50 as specified in ASTM B695.

1.03 REFERENCES

A. The publications referred to hereinafter form a part of this specification to the extent referenced. The publications are referred to in the text by the basic designation only. Unless otherwise indicated, the latest edition of referenced publications in effect at the time of the bid shall govern. In case of conflict between the requirements of this Section and those of the listed documents, the requirements of this Section shall prevail.

American Society of Testing Materials (ASTM)	
ASTM A153	Zinc Coating (Hot-Dip) on Iron and Steel Hardware
ASTM B695	Coatings of Zinc Mechanically Deposited on Iron and Steel

1.04 SUBMITTAL

A. Submittals shall be provided in accordance with Section 01330, “Submittals”, and shall include the following information:

1. Describe materials and method of coating used.

PART 2 - PRODUCTS

2.01 MATERIALS

A. The coating material shall be as specified in ASTM A153.

PART 3 - EXECUTION

3.01 REPAIR OF DEFECTIVE GALVANIZED COATING

A. Where zinc coating has been damaged after installation, substrate surface shall be first cleaned and then repaired with zinc dust-zinc oxide coating in accordance with ASTM A780. Application shall be as recommended by the zinc dust-zinc oxide coating manufacturer. Coating shall consist of multiple coats to dry film thickness of 8-mils. Items not physically damaged, but which have insufficient or deteriorating zinc coatings, and items damaged in shipment or prior to installation, shall be removed from the project site for repair by the hot-dip zinc coating method.

**** End of Section ****

SECTION 05090

WELDING

PART 1 - GENERAL

1.01 DESCRIPTION

A. Scope of Work

1. Unless otherwise approved or directed, perform all required project welding as specified herein.

B. Related Work:

1. Section 01330, “Submittals”
2. Section 05505, “Miscellaneous Metals”

C. Definitions:

1. Definitions shall be in accordance with AWS A3.0.
2. Symbols shall be in accordance with AWS A2.4 for welding and nondestructive testing, respectively, unless otherwise indicated.

1.02 REFERENCES

A. The publications referred to hereinafter form a part of this specification to the extent referenced. The publications are referred to in the text by the basic designation only. Unless otherwise indicated, the latest edition of referenced publications in effect at the time of the bid shall govern. In case of conflict between the requirements of this Section and those of the listed documents, the requirements of this Section shall prevail.

American Institute of Steel Construction (AISC)	
AISC 1999	LRFD Specification for Structural Steel for Buildings (with Commentary & Errata Incorporated as of September 4, 2001)

American National Standards Institute (ANSI)	
ANSI Z49.1	Safety in Welding and Cutting (1973)

American Welding Society (AWS)	
AWS A2.4-79	Symbols for Welding and Nondestructive Testing
AWS A3.0-80	Welding Terms and Definitions
AWS A5.18-69	Specifications for Carbon Steel Filler Metals for Gas Shielded Arc Welding
AWS D1.1-82	Structural Welding Code - Steel

Military Standard (MIL)	
MIL-W-8611A	Welding, Metal Arc and Gas, Steels and Corrosion and Heat Resistant Alloys
MIL-STD-1261A	Welding Procedures for Constructional Steels
MIL-STD-248C	Qualification Tests for Welders (Other than Aircraft Weldments)
MIL-STD-22D	Welded Joint Design

1.03 QUALITY ASSURANCE

A. Erector/Fabrication Qualification

1. Each welder and welding operator assigned to work on this contract shall be qualified in accordance with the applicable requirements of AWSD1.1, MIL-STD-248C and as specified herein. Welders and welding operators who make acceptable procedure qualifications test welds will be considered qualified for the welding procedure used.
2. Each welder or welding operator shall be assigned an identifying number, letter or symbol which shall be used to identify all welds made by him.
    a. The Engineer may, at his discretion, require welders and welding operators assigned to the project to identify their completed weldments with their identifying number, letter or symbol.
    b. For identification of welds, either written records indicating the location of welds made by each welder, welding operator or tacker shall be submitted or each welder, welding operator or tacker shall apply his symbol adjacent to the weld by means of a rubber stamp or felt-tipped marker and waterproof ink or other methods that do not result in an indentation in the metal.
    c. In the case of seam welds, the identification mark shall be adjacent to the weld at three (3) foot intervals. Identification by the use of die stamps or electric etchers shall not be allowed.
3. Re-qualification of a welder or welding operator shall be required under any of the following conditions:
    a. The welder or welding operator has not used the specific welding process for which he is qualified for a period exceeding six (6) months.
    b. There is specific reason to question his ability to make welds that meet the requirements of these specifications.
    c. The welder or welding operator was qualified by an employer other than those firms performing work under this contract and a qualification test has not been taken within the preceding twelve (12) months.

B. Welding Operations

1. This Section covers structural welding and mechanical welding. Welding shall be performed where indicated on the contract drawings, on approved shop drawings, and in other Sections of the specifications. Unless otherwise indicated on the drawings or in other Sections of the specifications, the design of welded connections shall conform to

the applicable requirements of AISC Specification for the nondestructive Design, Fabrication and Erection of Structural Steel for Buildings.

2. Material with welds will not be accepted unless the welding is specified or indicated on the drawings or otherwise approved. Welding shall be in accordance with the requirements are shown on the drawings or are specified in other Sections.
3. Welding shall not be started until welding procedures, welders, welding operators have been qualified as specified herein. Qualification testing shall be performed at or near the work site. Each Contractor performing welding shall maintain records, readily available for examination by the Inspector, of the test results obtained in welding procedure, welder, welding operator performance qualifications.
4. Welding procedures, welders, welding operators previously qualified by test may, at the discretion of the Engineer, be accepted for this contract without re-qualification provided that all of the following conditions are fulfilled:
    a. Copies of the welding procedure specifications, the procedure qualification test records, and the welder and welding operator qualification test records are submitted and approved by the Engineer in accordance with the requirements for shop drawings.
    b. Testing was performed by an approved testing laboratory, technical consultant, or the Engineer's approved quality control organization.
    c. The qualified welding procedure conforms to the applicable requirements of this specification and is applicable to welding conditions encountered under this contract.
    d. The welder and welding operator qualification tests conform to the requirements of this specification and are applicable to welding conditions encountered under this contract.
    e. Renewal of Qualification shall be met. Records showing period of employment, name of employer where welder or welding operator was last employed, and the process for which qualified shall be submitted as evidence of conformance.

C. Allowances Tolerances

1. Dimensional tolerances for welded construction, details of welds, and quality of welds shall be in accordance with the applicable requirements of the AWS D1.1 and the contract drawings, and to the satisfaction of the Engineer.
2. Welding miscellaneous steel supports is structural welding and shall be subject to ten percent (10%) random inspection.
3. Structural welding shall be subject to twenty percent (20%) non-destructive inspection.

D. Source Quality Control

1. The Contractor shall be responsible for the quality of all welding and joint preparation. Each person responsible for inspection and testing shall be qualified in accordance with this Section as applicable and shall be knowledgeable of the specification requirements.
2. The services of a qualified commercial inspection or testing laboratory or technical consultant, approved by the Engineer shall be employed by the Contractor for the purpose of making twenty percent (20%) nondestructive inspection of all structural and mechanical welding, ten percent (10%) random inspection, of the structural welds on

miscellaneous steel supports. Unacceptable welds shall be repaired by the Contractor at no additional expense to the Owner.

3. Prior to assigning any welder or welding operator tacker to work under this contract, the Contractor shall submit the names of the welders and welding operators to be employed on the work together with certification that each individual is qualified as specified herein. The certification shall state the type of welding and positions for which he is qualified, and the firm and individual certifying the qualification tests.

1.04 SUBMITTALS

A. Shop Drawings

1. Submit shop drawings in accordance with Section 01330, “Submittals”.
2. Submit a complete list of equipment and materials, including manufacturer's descriptive and technical literature, catalog cuts, and erection installation details.
3. Shop drawings shall show sizes, arrangement and methods of fabrication and installation.
4. Furnish equipment layout showing structural members and points of welding. Also furnish any other details required to demonstrate that the system has been coordinated and will properly function.

B. Welders Certificates

1. Welder certificates shall be submitted in accordance with the General Conditions and Section 01330, “Submittals”.
2. Contractor shall submit a welding certificate for each welder of this job.

C. Manufacturer Data

1. Weld filler metal

1.05 PRODUCT DELIVERY, STORAGE, AND HANDLING

A. Comply With Pertinent Parts of the General and Special Conditions

1. Delivery of steel shall be made in accordance with ASTM A700.
2. All equipment placed in storage shall be protected from the weather, humidity and temperature variations, dirt, dust, and other contaminants.
3. Items deformed so as to preclude satisfactory assembly shall not be used, and upon rejection, shall be removed for the site and replaced with acceptable items at the expense of the Contractor.

PART 2 - PRODUCTS

2.01 WELDING MATERIALS

A. All items of equipment for welding, electrodes, welding wire, and fluxes shall be capable of producing satisfactory welds when used by a qualified welder or welding operator using

qualified welding procedures. All welding materials shall comply with the applicable requirements of AWS D1.1.

2.02 WELD FILLER METAL

A. Shall conform to AWS A5.18.

PART 3 - EXECUTION

3.01 STRUCTURAL WELDING OPERATIONS

A. Workmanship and techniques for welded construction shall be in conformance with the applicable requirements of the AISC-1999 LRFD Specification for Structural Steel for Buildings, and of AWS D1.1. In case of conflict between AWS D1.1 and the AISC specification, the requirements of AWS D1.1 shall govern.

B. Welds shall meet the following minimum requirements:

1. On members whose maximum dimension is two-inches (2") or less, the weld must extend completely across the side or surface of largest dimensions.
2. On members whose largest dimensions is greater than two-inches (2") but less than twelve-inches (12"), one weld of at least two-inches (2") in length shall be provided.
3. On members whose largest dimension is greater than twelve-inches (12"), two or more welds, each not less than two-inches (2") in length, are to be provided at uniform spacings across the surface of largest dimension. The maximum spacing between successive welds must not exceed twelve-inches (12").
4. At butt joints use complete penetration welds on all members whose thickness is maximum seven (7) gauge or less.
5. Fillet welds are to have an effective size equal to the thickness of the members or as specified in AISC Pub: Specification for the Design, Fabrication and Erection of Structural Steel for Buildings.

3.02 WELD QUALITY

A. Where not otherwise specified in this specification, welded joint design shall follow MIL-STD-22D.

B. The general quality of weldments shall be such that no gaps, burnthroughs, holes, cracks, bubblers, wormholes, undercuts, inclusions or porosity shall be present.

C. Fillet welds shall be as shown on the drawings. If not shown, the welds shall be the same dimension as thickness as the lesser width of the base metal being welded.

D. All shield and conduit welds shall be continuous circumferential with no metal discontinuities allowed.

3.03 BONDING SURFACE PREPARATION

A. Mating surfaces shall be free of any foreign materials, e.g., dirt, filings, preservatives, etc., and

non-conducting films such as paint, anodizing, and oxides and other metallic films.

B. After cleaning, the bond shall be assembled or joined as soon as possible within thirty (30) minutes if practicable. When more than two (2) hours is required between cleaning and assembly of the bond, a temporary protective coating shall be applied. This coating shall be removed before completing the bond. The bond surface shall be kept free of moisture before assembly and the completed bond given a protective finish coat of paint as specified under Section 09970, “Metal Coatings”.

3.04 INSPECTION AND TESTS

A. In addition to the inspection and tests performed by the Contractor for quality control, the Engineer will perform inspection and testing for acceptance to the extent determined by the Inspector.

B. The Engineer reserves the right to perform supplemental nondestructive tests to determine compliance with this Section.

C. The welding shall be subject to inspection and tests in the mill, shop and field.

D. Inspection and tests in the mill or shop will not relieve the Contractor of the responsibility to furnish weldments of satisfactory quality.

E. When materials or workmanship do not conform to the specification requirements in the opinion of the Engineer, the Engineer reserves the right to reject material or workmanship or both at any time before final acceptance of the structure containing the weldment.

3.05 CORRECTIONS AND REPAIR

A. When inspection or testing indicated defects in the weld joints, the welds shall be repaired by the Contractor using a qualified welder or welding operator as applicable.

B. Repair shall be at no additional cost to the Owner.

C. Corrections shall be in accordance with the applicable requirements of AWS D1.1 and as herein specified.

D. Defects shall be repaired in accordance with the approved procedures.

E. Defects discovered between passes shall be repaired before additional weld material is deposited. Wherever a defect is removed the surrounding surface shall be prepared accordingly so as to avoid sharp notches, crevices, or corners.

F. After a defect is thought to have been removed, and prior to re-welding, the area shall be examined by the Inspector to insure that the defect has been eliminated.

G. Repair welds shall meet the inspection requirements of the original welds.

**** End of Section ****

SECTION 05100

STRUCTURAL METALS

PART 1 - GENERAL

1.01 DESCRIPTION

A. Work Included

1. This Section specifies structural metals consisting of standard shapes, fasteners, rods and plates that are used in structural supports and connections.

B. Related Work

1. Section 01330, “Submittals”
2. Section 05090, “Welding”

1.02 REFERENCES

A. The publications referred to hereinafter form a part of this specification to the extent referenced. The publications are referred to in the text by the basic designation only. Unless otherwise indicated, the latest edition of referenced publications in effect at the time of the bid shall govern. In case of conflict between the requirements of this Section and those of the listed documents, the requirements of this Section shall prevail.

American Institute of Steel Construction (AISC)	
AISC	American Institute of Steel Construction, Manual of Steel Construction, Load & Resistance Factor Design

American Society for Testing and Materials (ASTM)	
ASTM A36/A36M	Structural Steel
ASTM A53	Pipe, Steel, Black and Hot-Dipped, Zinc-Coated Welded and Seamless
ASTM A283/A283M	Low and Intermediate Tensile Strength Carbon Steel Plates, Shapes and Bars
ASTM A320/ A320M	Alloy-Steel Bolting Materials for Low Temperature Service
ASTM A500	Cold-Formed Welded and Seamless Carbon Steel Structural Tubing in Rounds and Shapes
ASTM B308	Aluminum-Alloy Standard Structural Shapes, Rolled or Extruded

American Welding Society (AWS)	
AWS-B3.0	Welding Procedures and Performance Qualifications

AWS D1.1	Structural Welding Code - Steel

1.03 QUALITY ASSURANCE

A. General

1. Structural assemblies and shop and field welding shall meet the requirements of the AISC Manual of Steel Construction.
2. The use of salvaged, reprocessed or scrap materials shall not be permitted.

1.04 SUBMITTALS

A. Submittals shall be provided in accordance with Section 01330, “Submittals”.

B. Detailed shop drawings of steel frame component parts of all structures. Submittals shall include the location, type and size of all bolts and welds. All welds shall be indicated by standard welding symbols of the AWS. The member cambers shall be indicated on the drawings.

PART 2 - PRODUCTS

2.01 MATERIALS

A. Steel

1. Materials for structural metals shall be as specified below.

Material	Specification
Standard Rolled Steel Sections	ASTM A36
Pipe Columns	ASTM A53, Grade B
Structural Steel Tubing	ASTM A500, Grade B
Structural Bars, Plates, and Similar Items	ASTM A36 or A283
Stainless Steel	ASTM A666, Grade A, Type 304 or 316
Stainless Steel Bolts, Nuts, and Washers	ASTM A320, Type 316
Steel Bolts	ASTM A307, Grade A

B. Aluminum

1. Unless otherwise specified, aluminum shall be extruded from 6061-T6 or 6063-T6 alloy, conforming to ASTM B308.

2.02 FABRICATION

Fabrication shall be in accordance with the AISC Manual of Steel Construction.

PART 3 - EXECUTION

3.01 INSTALLATION

A. General

1. Measurements shall be verified at the job.
2. Holes shall be punched 1/16-inch larger than the nominal size of the bolts, unless otherwise specified. Whenever needed, because of the thickness of the metal, holes shall be sub-punched and reamed or drilled. No drifting of bolts nor enlargement of holes will be allowed to correct misalignment. Mismatched holes shall be corrected with new material.
3. Dissimilar metals shall be protected from galvanic corrosion by means of pressure tapes, coatings or isolators. Aluminum in contact with concrete or grout shall be protected with a heavy coat of bituminous paint.
4. Metalwork to be embedded in concrete shall be as specified in Section 03300, “Cast-in-Place Concrete”. Metalwork shall be placed accurately and held in correct position while the concrete is placed or, if specified, recesses or block-outs shall be formed in the concrete after design strength is attained, and the metalwork shall be grouted in place in accordance with Section 03300, “Cast-in-Place Concrete”. The surfaces of metalwork in contact with or embedded in concrete shall be thoroughly cleaned.
5. Structural steel completely encased in concrete shall not be painted, and shall have a clean surface for bonding to concrete. Metalwork which is bent, broken or otherwise damaged shall be repaired or replaced by the Contractor.

B. Welding

1. Welding shall conform to Section 05090, “Welding”.
2. Unless otherwise specified, continuous welds shall be provided on all structural members that are exposed to weather or submerged in water or wastewater, and continuous seal welds shall be provided on both sides of all plates or structural shapes that are in contact with or submerged in water or wastewater.

C. Bolted Connections

1. Bolted connections shall conform to AISC Framed Beam Connections and shall be bearing type connections with threads excluded from shear planes.

3.02 CORROSION PROTECTION

A. Unless otherwise specified, all structural metal and structural steel, including that used in the fabrication of process equipment, shall be coated in accordance with Section 09900, “Painting”. Surface preparation shall be as specified in Section 09900, “Painting”, and shall include the following operations:

1. Grind the exterior and interior edges of all flame-cut plates or members to a smooth surface.
2. Grind all sharp edges off of sheared plates and punched holes.
3. Grind uneven or rough welds with high beads to a smooth finish.

3.03 CLEANING

A. After installation, damaged surfaces of shop primed metals shall be cleaned and touched up with the same material used for the shop coat. Damaged surfaces of galvanized metals shall be repaired as specified in Section 05080, “Mechanical Zinc Coating”, and Section 05910, “Hot-Dip Zinc Coating”.

**** End of Section ****

SECTION 05451

ANCHOR BOLTS

PART 1 - GENERAL

1.01 DESCRIPTION

A. This Section specifies anchor bolts complete with washers and nuts. Unless otherwise specified, anchor bolts shall be hot-dip galvanized or Type 304 stainless steel and shall conform to the equipment manufacturer's recommendations.

1.02 REFERENCES

A. The publications referred to hereinafter form a part of this specification to the extent referenced. The publications are referred to in the text by the basic designation only. Unless otherwise indicated, the latest edition of referenced publications in effect at the time of the bid shall govern. In case of conflict between the requirements of this Section and those of the listed documents, the requirements of this Section shall prevail.

American National Standards Institute (ANSI)	
ANSI A58.1	Minimum Design Loads for Buildings and Other Structures

American Society for Testing and Materials (ASTM)	
ASTM A36/A36M	Structural Steel
ASTM A307	Carbon Steel Bolts and Studs, 60,000 psi Tensile Strength
ASTM A320/ A320M	Alloy-Steel Bolting Materials for Low Temperature Service

Uniform Building Code (UBC)	
UBC-97	Uniform Building Code (1997)

1.03 SUBMITTALS

A. Submittals shall be provided in accordance with Section 01330, "Submittals", for all bolt systems not cast-in-place and shall include the following information:

1. Data indicating load capacities.
2. Chemical resistance.
3. Temperature limitations.
4. Installation instructions.
5. Evaluation Report for expansion and wedge type anchors as specified in Paragraph 3.04,

"Expansion Anchors".

6. Design calculations in accordance with Paragraph 2.03, "Design".

PART 2 - PRODUCTS

2.01 GENERAL

A. Anchor bolt holes in equipment support frames shall not exceed the bolt diameters by more than twenty-five percent (25%), up to a limiting maximum oversizing of 1/4-inch. Unless otherwise specified, minimum anchor bolt diameter shall be 1/2-inch.

B. Tapered washers shall be provided where mating surface is not square with the nut.

C. Expansion, wedge, or adhesive anchors set in holes drilled in the concrete after the concrete is placed will not be permitted in substitution for anchor bolts except where otherwise specified. Upset threads shall not be acceptable.

2.02 MATERIALS

A. Anchor bolt materials shall be as specified below.

Material	Specification
Steel Bolts	ASTM A307, Grade A
Fabricated Steel Bolts	ASTM A36
Stainless Steel Bolts, Nuts, and Washers	ASTM A320, Type 304
Expansion Anchors	HILTI-BOLT, McCulloch Industries, or approved equal
Adhesive Anchors	Simpson, HILTI-HVA, PARABOND Capsule, or approved equal
Headed Anchor Stud	Nelson Stude, or approved equal (use Type 316 Stainless Steel where specified)

2.03 DESIGN

A. Anchor bolts for equipment frames and foundations shall be designed in accordance with UBC for seismic zone 3, I = 1.5.

PART 3 - EXECUTION

3.01 GENERAL

A. Fieldwork, including cutting and threading, shall not be permitted on galvanized items. Dissimilar metals shall be protected from galvanic corrosion by means of pressure tapes, coatings or isolators. Grouting of anchor bolts with non-shrink or epoxy grouts shall be in accordance with the bolt manufacturer's recommendations.

3.02 CAST-IN-PLACE ANCHOR BOLTS

A. Anchor bolts to be embedded in concrete shall be placed accurately and held in correct position while the concrete is placed or, if specified, recesses or block-outs shall be formed in the concrete and the metalwork shall be grouted in place in accordance with Section 03300, “Cast-in-Place Concrete”. The surfaces of metalwork in contact with concrete shall be thoroughly cleaned.

B. After anchor bolts have been embedded, their threads shall be protected by grease and the nuts run on.

3.03 ADHESIVE ANCHOR BOLTS

A. Use of adhesive or capsule anchors shall be subject to the following conditions:

1. Approval from Engineer for specific application and from supplier of equipment to be anchored, if applicable.
2. Anchor diameter and grade of steel shall be per contract documents or per equipment supplier specifications. Anchor shall be threaded or deformed full length of embedment and shall be free of rust, scale, grease, and oils.
3. Adhesive capsules of different diameters may be used to obtain proper volume for the embedment, but no more than two (2) capsules per anchor may be used. When installing different diameter capsules in the same hole, the larger diameter capsule shall be installed first. Any extension or protrusion of the capsule from the hole is prohibited.
4. All installation recommendations by the anchor system manufacturer shall be followed carefully, including maximum hole diameter.
5. Holes shall have rough surfaces, such as can be achieved using a rotary percussion drill.
6. Holes shall be blown clean with compressed air and be free of dust or standing water prior to installation.
7. Anchor shall be left undisturbed and unloaded for full adhesive curing period.
8. Concrete temperature (not air temperature) shall be compatible with curing requirements of adhesives per adhesive manufacturer. Anchors shall not be placed in concrete below 25°F.

3.04 EXPANSION ANCHORS

A. Use of expansion or wedge type anchors shall be subject to subparagraph conditions 1, 2, 4, 5, and 6 as specified in Paragraph 3.03, “Adhesive Anchor Bolts”, hereinbefore.

B. The Contractor shall supply the Engineer with the current evaluation report from the International Conference of Building Officials for the particular brand of expansion anchors to be used.

**** End of Section ****

SECTION 05505

MISCELLANEOUS METALS

PART 1 - GENERAL

1.01 DESCRIPTION

A. Scope of Work

1. Furnish all labor, materials, equipment and incidentals required and install all miscellaneous metals as shown on the drawings and specified herein.

B. Related Work

1. Section 01330, “Submittals”
2. Section 05090, “Welding”
3. Section 05100, “Structural Metals”
4. Section 09900, “Painting”

1.02 COORDINATION

A. The work of this Section shall be completely coordinated with the work of other Sections. Verify at the site both the dimensions and work of other trades adjoining items of work in this Section before fabrication and installation of items herein specified.

B. Furnish to the pertinent trades all items included under this Section that are to be built into the work of other Sections.

1.03 SUBMITTALS

A. Manufacturer's certificate of compliance shall be submitted for approval on all materials and manufactured products provided under this specification.

B. Shop drawings shall be submitted for approval in accordance with Section 01330, “Submittals”. Also submit for approval catalog cuts, templates and erection and installation details, as appropriate, for all miscellaneous metal items. Submittals shall be complete in detail; shall indicate thickness, type grade, class of metal and dimensions; and shall show construction details, reinforcement, anchorage and installation with relation to the structure of which they are part.

1.04 REQUIREMENTS

A. The Contractor shall verify all measurements and shall take all field measurements necessary before fabrication. Welding to or on structural steel shall be in accordance with Section 05090, “Welding”. Items specified to be galvanized, shall be hot-dip processed after fabrication. Galvanizing shall be in accordance with ASTM A123, A153, A386 and A525, as applicable.

B. Exposed fastenings shall be compatible materials, shall generally match in color and finish, and

shall harmonize with the material to which fastenings are applied. Materials and parts necessary to complete each item, even though such work is not definitely shown or specified, shall be included.

C. All bolts, anchors, supports, braces, connection and other items necessary for completion of the miscellaneous metal work shall be provided. Necessary lugs and brackets shall be provided so that the work can be assembled in a neat and substantial manner. Holes for bolts and screws shall be drilled or punched. Burning of holes is prohibited. Poor matching of holes shall be cause for rejection. Fastenings shall be concealed where practicable. Thickness of metal and details of assembly and supports shall give ample strength and stiffness. Joints exposed to the weather shall be formed to exclude water.

D. Dissimilar Materials

1. Where dissimilar metals are in contact, or where aluminum is in contact with concrete, mortar, masonry, wet or pressure-treated wood, or absorptive materials subject to wetting, the surfaces shall be protected with a coat of bituminous paint conforming to MIL-C 18484 or to TT-V-51 or a coat of zinc chromate primer conforming to TT-P 645 to prevent galvanic or corrosive action.

E. Workmanship

1. Miscellaneous metal work shall be well formed to shape and size, with sharp lines and angles and true curves. Drilling and punching shall produce clean, true lines and surfaces. Welding shall be continuous along the entire area of contact (except where tack welding is specifically shown on the drawings). Exposed connections of work in place shall not be tack welded. Exposed welds shall be ground smooth. Exposed surfaces for work in place shall have a smooth finish, and exposed riveting shall be flush. Where tight fits are required, joints shall be milled to a close fit. Corner joints shall be coped or mitered, well formed, and in true alignment. Work shall be accurately set to established lines and elevations and securely fastened in place. Work shall be executed and finished in accordance with approved drawings, cuts and details.

F. Qualifications of Welders

1. Welding to or on structural steel or miscellaneous items of structural steel such as lintels and ladders shall be performed by certified welders qualified in accordance with Section 05090, “Welding”, using procedures, materials and equipment of the type required for the work.

G. Anchorage

1. Anchorage shall be provided where necessary for fastening miscellaneous metal items securely in place. Anchorage not otherwise specified or indicated shall include slotted inserts or expansion shields; toggle bolts and through bolts for masonry; machine and carriage bolts for steel; through bolts, lag bolts, and screws for wood. Slotted inserts shall be of types required to engage with the anchors. Do not use power driven fasteners on this job.

H. Galvanized Materials

1. Unless otherwise indicated or approved, all exposed ferrous metal and structural steel shall be hot-dipped galvanized. Fabricated items shall be ground smooth at welded joints, edges, and corners and galvanized after fabrication.

   Other items to be galvanized shall include, but not necessarily be limited to, the following:

a. All steel hardware, nuts, bolts, washers, anchors, and threaded rods, except as noted, or which are of stainless steel material.

PART 2 - PRODUCTS

2.01 MATERIALS

A. Materials shall conform to the requirements specified for the particular item; and where these requirements are not specified in detail, the materials shall be suitable for the intended usage of the item. The materials listed below shall conform to the respective specifications and other requirements as designated below:

1. Aluminum - Alloy 6061-T6, raised pattern plate, thickness as indicated, 1/4 inch minimum. Fasten all accessories by welding or stainless steel bolts.
2. Stainless steel bars, plates, bolts and nuts shall conform to ASTM A193 Type 316.
3. Structural carbon steel for riveted, bolted, or welded work shall conform to ASTM A36.
4. Steel pipe for structural use shall conform to ASTM A53.
5. Structural steel tubing for riveted, bolted or welded work shall conform to ASTM A500 or A501.
6. Cover plates shall be raised pattern A36 steel, galvanized after fabrication.
7. Steel nuts and bolts shall conform to ASTM A307.
8. Washers - Circular washers shall be flat and smooth and conform to ANSI B27.2, Type A. Beveled washers for American Standard beams and channels shall be square or rectangular, shall taper in thickness and shall be smooth. Washers shall conform to FF-W-84. Flat washers shall be suitable for the use intended.
9. Hinges - Hinges shall be galvanized.

2.02 FABRICATED ITEMS

A. Miscellaneous plates and shapes for items that do not form a part of the structural steel framework, such as miscellaneous mountings, base plates and frames, shall be provided to complete the work.

2.03 CASTINGS

A. All casting shall be sound and free from shrinkage cracks, blow holes and other defects. All fins and burnt sand must be removed. Excessive porosity and spongy surfaces will constitute causes for rejection. The Engineer shall be final judge as to whether the defects present are sufficient to cause rejection.

B. No welding or patching of defects in castings will be permitted unless authorized by the Engineer. Any such welding or patching done without the Engineer's consent shall be cause for rejection.

C. All casting shall be true to form and dimensions shown on the drawings. After inspection and prior to shipping, all machined surfaces shall be coated with a blue rust inhibitive lacquer, or

other approved materials which can be easily removed, unless otherwise specified.

D. The dimensions of the finished castings shall not be less than the specified dimensions. Castings shall not be more than seven and one-half (7-1/2) percent overweight. Large casting shall be suspended and hammered over their entire area. No cracks, flaws, or other defects shall appear after such hammering.

E. Castings shall be provided with adequate, continuous fillets cast in place in all re-entrant angles. The radius of curvature of the exposed surface of a fillet shall define the size of the fillet. The size of fillets shall not be less than one-half (1/2) of the thickness of the thinnest adjoined member nor less than one-half (1/2) inch long.

F. Iron castings shall be dipped or painted with asphalt, which will form a tough, tenacious, non-scaling coating which does not have a tendency to become brittle when cold or sticky when hot.

PART 3 - EXECUTION

3.01 WELDING

A. All welding shall be done in conformance with Section 05090, “Welding”.

3.02 FABRICATION

A. All miscellaneous metal work shall be formed true to detail, with clean, straight, sharply defined profiles and smooth surfaces of uniform color and texture and free from defects impairing strength of durability.

3.03 SHOP CLEANING

A. Steel and iron work shall be cleaned by power wire brushing, or other approved manual or mechanical means, for removal of all rust, loose paint, scale and deleterious substances. Cleaned surfaces which become contaminated with rust, dirt, oil, grease or other foreign matter, shall be washed with solvents until thoroughly clean. The cleaning of steel to be embedded in concrete shall not be required.

3.04 PAINTING

A. Painting shall conform to the requirements of Section 09900, “Painting”.

3.05 GALVANIZING

A. All steel is to be galvanized unless indicated otherwise. Galvanizing shall be performed by the hot-dip process after fabrication into the largest practical sections. The galvanizing shall conform to the requirements of ASTM A123. Fabrication shall include all operations such as shearing, punching, forming, bending, welding, riveting, etc. When it is necessary to straighten any sections after galvanizing, such work shall be performed without damage to the spelter coating. For those parts to be painted after galvanizing, do not apply any after galvanizing treatment.

B. Small structural steel or cast steel articles, such as bolts, nuts, washers, and similar articles

that are to be galvanized, shall be galvanized after fabrication in accordance with the requirements of ASTM A153.

3.06 INSTALLATION

A. Contractor shall be responsible for installation of all miscellaneous metalwork. Items to be attached to concrete after such work is completed shall be installed in accordance with the details shown. All dimensions shall be verified at the site before fabrication is started. All installation shall be done in a workmanlike manner and be set true and plumb and in accordance with the Drawings and this specification.

**** End of Section ****

SECTION 05530

GRATING, STEEL STAIRS, FLOOR PLATES, SAFETY STAIR TREADS, AND COVER PLATES

PART 1 - GENERAL

1.01 DESCRIPTION

A. This Section specifies floor grating, floor plates, cover plates, steel stairs, and safety stair treads.

1.02 REFERENCES

A. The publications referred to hereinafter form a part of this specification to the extent referenced. The publications are referred to in the text by the basic designation only. Unless otherwise indicated, the latest edition of referenced publications in effect at the time of the bid shall govern. In case of conflict between the requirements of this Section and those of the listed documents, the requirements of this Section shall prevail.

American Institute of Steel Construction (AISC)	
AISC	Manual of Steel Construction, Allowable Stress Design - 9th Edition

American Society of Civil Engineers (ASCE)	
ASCE Journal Vo. 88-ST6	Suggested Specifications for Structures of Aluminum Alloys 6061-T6 and 6063-T6

American Society for Testing and Materials (ASTM)	
ASTM A36/A36M	Structural Steel
ASTM A569/ A569M	Steel, Sheet and Strip, Carbon, Hot Rolled, Commercial Quality
ASTM B210	Aluminum and Aluminum-Alloy Drawn Seamless Tubes
ASTM B221	Aluminum and Aluminum-Alloy Extruded Bars, Rods, Wire, Shapes and Tubes

1.03 SUBMITTAL

A. The Submittals shall be provided in accordance with Section 01330, “Submittals”, and shall include the following information:

1. Certified Test Reports

   a. Before fabrication of any floor grating, floor plates, cover plates, steel stairs, or safety stair treads, the Contractor shall provide certificates which attest to their material complying with these specifications.

2. Shop drawings shall include a plan layout, appropriate sections and installation details for each item provided.

PART 2 - PRODUCTS

2.01 MATERIALS

A. Aluminum

1. Aluminum grating bearing bars and aluminum floor plates and cover plates shall be of alloy 6061-T6 conforming to ASTM B221. Aluminum grating cross bars shall be of an alloy conforming to either ASTM B221 (extrusions) or B210 (drawn).

B. Steel

1. Steel grating bearing bars and cross bars shall be of welding quality mild carbon steel conforming to ASTM A569. Steel floor plates and cover plates shall be of structural quality steel conforming to ASTM A36.

C. Bitumastic Coating

1. Material shall be Kop-coat, bitumastic black solution, Porter, Tarmastic No. 100, Tnemec 449 heavy-duty black, or approved equal.

2.02 FABRICATION

A. General

1. Rough weld beads and sharp metal edges on gratings and plates shall be ground smooth. Welds exposed to view shall be uniform and neat. Welds to be galvanized shall be sandblasted prior to galvanizing.
2. Holes shall be punched 1/16 inch larger than the nominal size of the bolts, unless otherwise specified. Whenever needed, because of the thickness of the metal, holes shall be sub-punched and reamed or shall be drilled. Cutting, drilling, punching, threading and tapping shall be performed prior to hot-dip galvanizing.

B. Grating

1. Grating shall be as specified. Both bearing bars and cross bars shall be continuous. Openings shall be banded with bars having the same dimensions as the bearing bars. Perimeter edges shall be banded with bars flush at the top surface of the grating and 1/4 inch clear of the bottom surface. Bars terminating against edge bars shall be welded to the edge bars when welded construction is used. When crimped or swaged construction is used, bars at edges shall protrude a maximum of 1/16 inch and shall be peened or ground to a smooth surface. No single piece of grating shall weigh more than seventy (70) pounds unless specifically detailed otherwise.
2. Aluminum Grating
    a. Unless otherwise specified, grating shall be fabricated of aluminum. Bearing bars shall be punched to receive the cross bars. After insertion in the bearing bars, cross bars shall be deformed by a hydraulic press or similar means to permanently lock the bars into the bearing bar openings. Fabrication methods

employing bending or notching of bearing or cross bars will not be permitted. Aluminum grating shall be Gary Galok, Seidelhuber, or approved equal.

3. Steel Grating

   a. Steel grating shall be used only where specified. Steel grating shall be hot-dip galvanized. Notching, slotting, or cutting the top or bottom edges of bearing bars to receive cross bars will not be permitted unless each intersection of bars is fully welded to restore each bearing bar to its full cross-sectional strength. Steel grating shall be Irving Type IWA, Gary Type GW, or approved equal.

C. Floor and Cover Plates

1. Floor and cover plates (Checkered Plate) shall be Alcoa C-102 aluminum tread plate, Reynolds diamond tread plate, or approved equal. Hinged cover plates shall be as specified and shall be set flush with surrounding floor. No single piece of floor and cover plate shall weigh more than seventy (70) pounds unless specifically detailed otherwise.

D. Stairs and Ladders

1. Unless otherwise specified, stairs shall be steel and shall be hot-dip galvanized after fabrication. Ladders shall be stainless steel, puddle welded on outside of rungs.

E. Safety Stair Treads

1. Safety stair treads shall be 4-inches wide and shall be Alumogrit, Type 101, as manufactured by Wooster Products, Incorporated; Alumalum, Style A, as manufactured by American Abrasive Metals Company; Style AX as manufactured by Safe-T-Metal Company, Incorporated, or approved equal.

PART 3 - EXECUTION

3.01 INSTALLATION

A. General

1. Fieldwork shall not be permitted on galvanized items. Drilling of bolts or enlargement of holes to correct misalignment will not be allowed.
2. Dissimilar metals shall be protected from galvanic corrosion by means of pressure tapes, coatings or isolators. Aluminum in contact with concrete shall be protected by a heavy coat of bituminous paint.
3. Metalwork to be embedded in concrete shall be placed accurately and held in correct position while the concrete is placed or, if specified, recesses or block-outs shall be formed in the concrete after it has attained its design strength and the metalwork grouted in place as specified in Section 03300, “Cast-in-Place Concrete”. The surfaces of metalwork in contact with or embedded in concrete shall be thoroughly cleaned. If accepted, recesses may be neatly cored in the concrete.

B. Grating, Floor, and Cover Plates

1. Grating, floor and cover plates shall be field measured for proper cutouts and proper sizes. Field welding of aluminum grating and cover plates, where specified, shall be in accordance with ASCE Vol. 88-ST6.

C. Stairs and Ladders

1. Stairs and ladders shall be fitted accurately and field measured where necessary.

D. Safety Stair Treads

1. Unless otherwise specified, safety stair treads shall be installed on all concrete stairs. Treads shall be secured to concrete with suitable anchors at 15-inches on centers and not more than 4-inches from the ends. Rubber tape, 1/8-inch thick, shall be provided at both ends and cut to fit shape of tread prior to concrete placement.

3.02 CLEANING

A. After installation, damaged surfaces of shop primed metals shall be cleaned and touched up with the same material used for the shop coat. Damaged surfaces of galvanized metals shall be repaired as specified in Section 05910, “Hot-Dip Zinc Coating”.

**** End of Section ****

SECTION 05910

HOT-DIP ZINC COATING

PART 1 - GENERAL

1.01 SUMMARY

A. Description of Work

1. This Section specifies hot-dip zinc coating.

B. Related Documents

1. The General and Supplemental Conditions, and the applicable Sections of Division 1, form a part of this Section.

1.02 REFERENCES

A. The publications referred to hereinafter form a part of this specification to the extent referenced. The publications are referred to in the text by the basic designation only. Unless otherwise indicated, the latest edition of referenced publications in effect at the time of the bid shall govern. In case of conflict between the requirements of this Section and those of the listed documents, the requirements of this Section shall prevail.

American Society for Testing and Materials (ASTM)	
ASTM A123	Zinc (Hot-Dip Galvanized) Coatings on Iron and Steel Products
ASTM A143	Safeguarding Against Embrittlement of Hot-Dip Galvanized Structural Steel Products and Procedure for Detecting Embrittlement
ASTM A153	Zinc Coating (Hot Dip) on Iron and Steel Hardware
ASTM A384	Safeguarding Against Warpage and Distortion During Hot-Dip Galvanizing of Steel Assemblies
ASTM A780	Providing High-Quality Zinc Coatings (Hot-Dip)
ASTM A780	Repair of Damaged Hot-Dip Galvanized Coatings

Military Standard (MIL)	
MILSPEC-DOD-P-21035	Paint, High Zinc Dust Content

1.03 SUBMITTALS

A. Submittals shall be provided in accordance with Section 01300, “Submittals”, and shall include the following information:

1. Zinc dust-zinc oxide coating manufacturer’s product data showing conformance to the specified product.

2. Manufacturer's recommendation for application of zinc dust-zinc oxide coating.
3. Coating applicator's Certificate of Compliance that the hot-dip galvanized coating meets or exceeds the specified requirements of ASTM A123 or A153, as applicable.

PART 2 - PRODUCTS

2.01 MATERIALS

A. Zinc coating material shall be as specified in ASTM A153. Zinc Dust-Zinc Oxide Coating: Zinc dust-zinc oxide coating shall conform to MILSPEC DOD-P-21035. Coating shall be as manufactured by Z.R.C. Chemical Products Cp., Galvicon Co., or approved equal.

2.02 FABRICATION REQUIREMENTS

A. Fabrication practices for products to be galvanized shall be in accordance with applicable portions of ASTM A143, A384 and A385.

PART 3 - EXECUTION

3.01 APPLICATION

A. Steel members, fabrications and assemblies shall be galvanized after fabrication in accordance with ASTM A123. Unless otherwise specified, steel items weighting 100-pounds or less shall not be hot-dip zinc coated. Anchor bolts and nuts 5/8 inch and larger shall be hot-dip zinc coated in accordance with ASTM A153. Anchor bolts and nuts smaller than 5/8 inch and all other bolts, screws, nuts, washers and other minor steel fasteners shall be mechanically zinc coated as specified in Section 05080, "Mechanical Zinc Coating".

3.02 COATING REQUIREMENTS

A. Coating weight shall conform with paragraph 5.1 of ASTM A123 or Table 1 of ASTM A153, as appropriate.

3.03 REPAIR OF DEFECTIVE GALVANIZED COATING

B. Where zinc coating has been damaged after installation, substrate surface shall be first cleaned and then repaired with zinc dust-zinc oxide coating in accordance with ASTM A780. Application shall be as recommended by the zinc dust-zinc oxide coating manufacturer. Coating shall consist of multiple coats to dry film thickness of 8-mils. Items not physically damaged, but which have insufficient or deteriorating zinc coatings, and items damaged in shipment or prior to installation, shall be removed from the project site for repair by the hot-dip zinc coating method.

**** End of Section ****

DIVISION 6 – WOOD AND PLASTIC (Not Used)

DIVISION 7 – THERMAL AND MOISTURE PROTECTION (Not Used)

DIVISION 8 – DOORS AND WINDOWS (Not Used)

DIVISION 9 – FINISHES

SECTION 09900

PAINTING

PART 1 - GENERAL

1.01 DESCRIPTION

A. Scope of Work

1. Contractor shall furnish all labor, materials, equipment, and incidentals necessary to perform all painting as shown on the drawings, and as specified herein, including, but not limited to:

    a. Exposed electrical conduit and exposed ductile iron pipe.

B. Definitions

1. The term “paint”, as used herein, includes enamels, sealers, stains, epoxies, and other coatings, whether used as prime, intermediate, or finish coats.

1.02 REFERENCES

A. The publications referred to hereinafter form a part of this specification to the extent referenced. The publications are referred to in the text by the basic designation only. Unless otherwise indicated, the latest edition of referenced publications in effect at the time of the bid shall govern. In case of conflict between the requirements of this Section and those of the listed documents, the requirements of this Section shall prevail.

Federal Specifications	
FS TT-E-529G	Enamel, Alkyd, Semi-Gloss (For Exterior and Interior Surfaces)
FS TT-P-645B	Zinc-Molybdate, Alkyd Type Primer

Steel Structures Painting Council (SSPC)	
SSPC SP-1	Solvent Cleaning
SSPC SP-6	Commercial Blast Cleaning
SSPC PAINT 25	Zinc Oxide, Alkyd, Linseed Oil Primer for Use Over Hand Cleaned Steel
SSPC-PAINT 5	Zinc Dust, Zinc Oxide, and Phenolic Varnish Paint

American Society for Testing and Materials (ASTM)

ASTM A780	Repair of Damaged & Uncoated Areas of Hot-Dip Galvanized Coatings

PART 2 - PRODUCTS

2.01 MANUFACTURERS

A. Acceptable manufacturers include Glidden, Ameritone, Fuller-Obrien, Rust-Oleum, H&C (a Division of Sherwin Williams), Monopole, Frazee, Dunn Edwards, or approved equal.

2.02 MATERIALS

A. Materials shall conform to the requirements of the specifications listed herein, and in Paragraph 3.09, “Painting Schedule”.

B. Semi-Gloss alkyd enamel shall conform to Federal Specification TT-E-529G. The associated Primer, unless otherwise approved, shall conform to either Federal Specification TT-P-645B, or SSPC Paint 25. Finish coats shall be the color selected by the Engineer.

C. Zinc dust-zinc oxide primer coatings for repair of galvanized surfaces shall conform to SSPC-Paint 5, ASTM A780, and shall contain at least 65% zinc dust by weight when dried.

D. Polyamide Epoxy shall be a two component semi-gloss pigmented system with separately packaged base and curing agent. Solids content of the finish coat material shall be at least fifty-five percent (55%) by volume. Provide Sherwin Williams Tile-Clad High Solids, or Porter Coatings’ PorterGlaze 4400 HB Semi-Gloss Epoxy, or approved equal finish coat. Use finish coat manufacturer’s recommended primer.

PART 3 - EXECUTION

3.01 DELIVERY, STORAGE, AND HANDLING

A. Deliver paint materials in sealed, original labeled containers, bearing manufacturer's name, type of paint, brand name, color designation, and instructions for mixing and/or reducing.

B. Provide adequate storage facilities. Store paint materials at minimum ambient temperature of 45°F in well ventilated areas.

C. Take precautionary measures to prevent fire hazards and spontaneous combustion.

3.02 ENVIRONMENTAL CONDITIONS

A. Ensure surface and surrounding air temperatures are at least 60°F, unless a higher temperature is recommended by the manufacturer, before applying paint.

3.03 PROTECTION

A. Adequately protect other surfaces from preparation and paint damage. Repair damage and remove all splattered paint as a result of inadequate or unsuitable protection.

B. Furnish sufficient drop cloths, shields, and protective equipment to prevent spray or droppings from fouling surfaces not being painted and, in particular, surfaces within storage and preparation area.

C. Place cotton waste, clothes, and material which may constitute a fire hazard in closed metal containers and remove daily from site.

3.04 INSPECTION

A. Thoroughly examine surfaces scheduled to be painted prior to commencement of work. Report in writing to the Engineer, any condition that may potentially affect proper application. Do not commence until such defects have been corrected.

3.05 PREPARATION OF SURFACES

A. Preparation of metallic surfaces shall be conducted in accordance with the applicable portion of the latest surface preparation specifications of the SSPC, and the coating manufacturer's recommendations. Any sharp or rough areas shall be ground or filed smooth prior to initiation of surface preparation for painting.

B. Blast cleaning shall conform to SSPC SP-6 "Commercial Blast Cleaning".

C. Solvent cleaning shall conform to SSPC SP-1 "Solvent Cleaning".

D. Pressure washing shall be performed using commercial machines operating with a nozzle pressure of at least 1000-psi, unless otherwise approved.

E. Surfaces to be painted shall be clean before applying paint or surface treatments. Oil and grease shall be removed with clean cloths and cleaning solvents prior to mechanical cleaning. Cleaning solvents shall be of low toxicity with a flashpoint in excess of 100°F. Cleaning shall be programmed so that dust and other contaminants will not fall on wet, newly painted surfaces.

F. Remove mildew by scrubbing with solution of trisodium phosphate and bleach. Rinse with clean water and allow surface to dry completely.

G. Remove dirt, powdery residue, and foreign matter from piping and metals designated for finishing.

H. Remove grease, rust, scale, dirt, and dust from steel and iron surfaces. Where heavy coatings of scale are evident, remove by wire brushing, sandblasting, or any other approved method.

I. Sand and scrape shop primed steel surfaces to remove loose primer and rust. Feather-out edges to make touch-up patches inconspicuous. Clean surfaces with solvent.

J. Shop painted ferrous surfaces shall be protected from corrosion by treating and touching-up corroded areas immediately upon detection.

K. Concrete floors shall be cleaned and cured as specified in Section 03300, "Cast-in-Place Concrete", and then prepared as specified by the coating manufacturer.

3.06 APPLICATIONS

A. All painting shall conform to the coating manufacturer's submitted, and approved, technical data and recommendations, and to the following general conditions:

1. Thickness of coating in mils shall mean the dry film thickness. The number coats specified shall mean the minimum number of coats to be used. Additional coatings shall be required if necessary to obtain the specified film thickness.
2. Prime coats, where called for, shall be provided as part of the painting system. Shop prime coats shall conform to the specified painting system for the given item. It shall be the responsibility of the Contractor to coordinate work so that factory primed items are primed or painted with a coating compatible with the specified painting system.

B. Paint may be applied by brush, roller, or spray except as hereinafter specified. At time of application, paint shall show no signs of deterioration. Uniform suspension of pigments shall be applied so finished surfaces shall be free from runs, drops, ridges, waves, laps, brush marks, and variations in color, texture, and finish. Hiding shall be complete. Each coat shall be applied as a film of uniform thickness.

C. Rollers for applying paints and enamels shall be of a type designed for the coating to be applied and the surface to be coated. Special attention shall be given to insure that all surfaces, including edges, corners, crevices, welds, and rivets receive a film thickness equivalent to that of adjacent painted surfaces. Adequate ventilation shall be provided during paint application. Respirators shall be worn by all persons engaged in spray painting. Adjacent areas shall be protected by the use of drop cloths or other approved precautionary measures shall be taken.

D. The first coat shall include repeated touching-up of suction spots or overall applications of primer or sealer to produce a uniform color and gloss. Paint shall be applied only to surfaces that are completely free of surface moisture, as determined by sight or touch.

E. Coating Progress

1. Sufficient time shall elapse between successive coats to permit proper drying. This period shall be modified, as necessary, to suit adverse weather conditions. Oil base or oleoresinous solvent-type paints shall be considered dry for recoating when the paint feels firm, does not deform or feel sticky under moderate pressure of the thumb, and the application of another coat of paint does not cause lifting or loss of adhesion of the undercoat.

F. Metal Surfaces

1. Apply all coats by spray, unless otherwise approved.

G. All galvanized metal surfaces shall be painted, unless specified otherwise.

H. Time Between Surface Preparation and Painting

1. Surfaces that have been cleaned, pretreated, and otherwise prepared for painting shall be given a coat of the specified first coat as soon as practicable after such pretreatment has been completed, but prior to any deterioration of the prepared surface.

3.07 MECHANICAL AND ELECTRICAL EQUIPMENT

A. Do not paint over nameplates or other identification plates.

B. Do not paint flexible conduit or wiring.

3.08 CLEANING

A. As work proceeds, and upon completion, promptly remove paint where spilled, splashed or spattered.

B. During progress of work keep premises free from any unnecessary accumulation of tools, equipment, surplus materials and debris.

C. Upon completion of work leave premises neat and clean, to the satisfaction of the Engineer.

3.09 PAINTING SCHEDULE

A. The following Painting Schedule prescribes the surfaces to be painted, required surface preparation, and the number and types of coats of paint to be applied. Applied dry film thicknesses per coat shall conform to the manufacturer's recommended thicknesses.

Surface	Surface Preparation	1st Coat	2nd Coat	3rd Coat
Exterior galvanized surfaces touch-up	Touch-up damaged coatings per Paragraph 2.02.C, "Materials".			
Concrete tank support	See Paragraph 3.05, "Preparation of Surfaces"	Acry-Shield 100% Acrylic Exterior Masonry Primer from Kelly Moore per TT-E-529G, or approved equal	One coat Acry-Shield 100% Acrylic Exterior Flat Paint from Kelly Moore per TT-E-529G, or approved equal	
MCC enclosure(Powder coated sheet metal)	Prepare as applicable per Paragraph 3.05, "Preparation of Surfaces"	Polyester TGIC cured thermosetting powder coating to minimum dry mil thickness of 3.0 mils	n/a	
Exposed conduit	Prepare as applicable per Paragraph 3.05, "Preparation of Surfaces"	One coat of industrial grade primer per TT-P-645B, SSPC Paint 25, or approved equal	Two coats of "City of Sacramento - Centari Brown" alkyd enamel from Dunn Edwards, per TT-E-529G, or approved equal	
Wellhead discharge piping, baseplate, hydro-pneumatic tank, vent tubes	Pressure wash, sand, solvent clean, as applicable per Paragraph 3.05, "Preparation of Surfaces"	One coat of industrial grade primer per TT-P-645B, SSPC Paint 25, or approved equal	Two coats of "City of Sacramento - Centari Brown" alkyd enamel from Dunn Edwards, per TT-E-529G or approved equal	
Galvanized surface repair	Solvent Clean, per Paragraph 3.05, "Preparation of Surfaces"	Apply one coat SSPC-Paint 5	Apply two coats per TT-E-529G, or as approved	

**** End of Section ****

SECTION 09970

METAL COATINGS

PART 1 - GENERAL

1.01 DESCRIPTION

A. Work Included

1. Clean and prepare all surfaces for painting on the mechanical equipment and piping after job site assembly.
2. Factory prime paint all surfaces of specified mechanical equipment, structural steel shapes and tubing.
3. Field finish paint all primed surfaces of the specified mechanical equipment, steel doors and frames.
4. Clean, prepare and touch-up paint all welded joints and damaged surfaces on the hand rails, steel stairs structural steel and all other hot dipped galvanized steel on the job.

B. Related Work

1. Section 05080, “Mechanical Zinc Coating”
2. Section 05100, “Structural Metals”
3. Section 05530, “Grating, Steel Stairs, Floor Plates, Safety Stair Treads, and Cover Plates”

C. Definitions

1. The term "paint" as used herein, includes enamels, epoxies, zinc rich primer, and other coatings, whether used as prime, intermediate, or finish coats.

1.02 REFERENCES

A. The publications referred to hereinafter form a part of this specification to the extent referenced. The publications are referred to in the text by the basic designation only. Unless otherwise indicated, the latest edition of referenced publications in effect at the time of the bid shall govern. In case of conflict between the requirements of this Section and those of the listed documents, the requirements of this Section shall prevail.

Federal Specifications	
FS TT-E-489G	Enamel, Alkyd, Gloss (for exterior and interior surfaces)
FS TT-C-535B	Tile-like Coating, Epoxy, Two Component
FS TT-P-641G	Primer Coating: Zinc Dust - Zinc Oxide (for galvanized surfaces)

Steel Structures Painting Council (SSPC)

SSPC SP 3	Power Tool Cleaning
SSPC SP 6	Commercial Blast Cleaning
SSPC SP 7	Brush-off Blast Cleaning

1.03 SUBMITTALS

A. Submit for approval in accordance with Section 01330, “Submittals”.

B. Submit the manufacturer's Standard thirty color pre-mixed color selection chart. Colors will be selected by Project Engineer.

C. Manufacturer's Data

1. Manufacturer's current printed product description, Material Safety Data Sheet (MSDS) specification conformance, technical data, detailed mixing, thinning and application instructions, minimum and maximum application temperature, curing time and drying time between coats, shall be submitted for the following surface coatings:

    a. Cold galvanizing paint

    b. Gloss alkyd enamel primer and finish

    c. Polyamide epoxy primer and high build polymide epoxy finish

PART 2 - PRODUCTS

2.01 MATERIALS

A. Materials shall conform to the requirements of the specifications listed herein and in Paragraph 3.09, “Painting Schedule”.

B. Cold galvanizing paint shall be a zinc dust, zinc oxide conforming to Federal Specifications TT-P-641G. Solids content shall be a minimum of fifty percent (50%) by volume and the metallic zinc content shall be approximately ninety-five percent (95%) by weight in dry film. Furnish ZRC Products Company cold galvanizing compound or approved equal.

C. Gloss alkyd enamel primer and finish paint shall conform to Federal Specifications TT-E-489G. Solids content shall be a minimum volume of thirty-five percent (35%) for primer and forty-five percent (45%) for finish coat. Furnish Devoe Paint Bar-Ox P-50 and Bar-Ox 450 or approved equal.

D. Polyamide epoxy primer and finish paint shall both be manufactured by the same company. The finish coat shall be a two component system with separately packaged base and curing agent. Solids content shall be a minimum volume of fifty percent (50%) for primer and fifty-five percent (55%) for the finish coat. Furnish Porter International 4300/4361, Valspar Corporation 13F62/89, Sherwin Williams Kem Kromik B50, B62/B60 series, or approved equal.

PART 3 - EXECUTION

3.01 DELIVERY, STORAGE AND HANDLING

A. Deliver paint materials in sealed original labeled containers, bearing manufacturer's name, type of paint, brand name, color designation, and instructions for mixing and/or reducing.

B. Provide adequate storage facilities. Store paint materials at minimum ambient temperature of 45°F in well ventilated areas.

C. Take precautionary measures to prevent fire hazards and spontaneous combustions.

3.02 ENVIRONMENTAL CONDITIONS

A. Ensure surface temperatures or the surrounding air temperature is above 60°F before applying paint.

3.03 PROTECTION

A. Adequately protect other surfaces from preparation operations, paint, and damage. Repair damage and remove all paint as a result of inadequate or unsuitable protection.

B. Furnish sufficient drop cloths, shields, and protective equipment to prevent spray or droppings from fouling surfaces not being painted and in particular, surfaces within storage and preparation area.

C. Place cotton waste, clothes, and material which may constitute a fire hazard in closed metal containers and remove daily from site.

3.04 SURFACE EXAMINATION

A. Thoroughly examine surfaces scheduled to be painted prior to commencement of work. Report in writing to City, any condition that may potentially affect proper application. Do not commence until such defects have been corrected.

3.05 PREPARATION OF SURFACES

A. Preparation of metallic surfaces shall be conducted in accordance with the applicable portion of latest surface preparation specification of the Steel Structures Painting Council (SSPC). Any sharp or rough areas shall be grouted or filed smooth prior to initiation of surface preparation for painting.

B. Blast cleaning shall conform to SSPC-SP5 "White metal blast cleaning" and shall clean metal surfaces to a gray-white uniform metallic color until each element of the surface is free of all visible residues.

C. Solvent cleaning shall conform to SSPC-SP1 "Solvent cleaning" and shall remove all oil, grease, soil, and other contaminants by use of solvents, emulsions, cleaning compounds, steam cleaning, or similar materials and methods which involve a dissolvent cleaning action.

D. Surfaces to be painted shall be clean before applying paint or surface treatments. Oil and grease shall be removed with clean cloths and cleaning solvents prior to mechanical cleaning.

Cleaning solvents shall be of low toxicity with a flashpoint in excess of 100°F. Cleaning shall be programmed so that dust and other contaminants will not fall on wet, newly painted surfaces.

E. Remove mildew by scrubbing with solution of trisodium phosphate and bleach. Rinse with clean water and allow surface to dry completely.

F. Remove dirt, powdery residue and foreign matter from piping and metals designated for finishing.

G. Remove grease, rust, scale, dirt, and dust from steel and iron surfaces. Where heavy coatings of scale are evident, remove by wire brushing, sandblasting or any other necessary method. Ensure steel surfaces are satisfactory before paint finishing.

H. Clean galvanized steel surfaces by washing with solvent. Apply a treatment of a vinyl type wash solution ensuring weld joints are cleaned.

I. Sand and scrape shop primed steel surfaces to remove loose primer and rust. Feather out edges to make touch-up patches inconspicuous. Clean surfaces with solvent. Shop coated ferrous surfaces shall be protected from corrosion by treating and touching up corroded areas immediately upon detection.

3.06 APPLICATIONS

A. Manufacturer's Data

1. All painting shall conform to the coating manufacturer's submitted and approved technical data and recommendations and to the following general conditions:

    a. Thickness of coating in mils shall mean the dry film thickness. The number of coats specified shall mean the minimum number of coats to be used. Additional coatings shall be required if necessary to obtain the specified film thickness.

    b. Prime coats shall be provided where called for as a part of the painting system. Shop prime coats shall conform to the specified painting system for the given item. It shall be the responsibility of the Contractor to coordinate work so that factory prime items are primed or painted with a coating compatible with the specified painting system.

B. General

1. Paint may be applied by brush, roller or spray except as hereinafter specified. At time of application, paint shall show no signs of deterioration. Uniform suspension of pigments shall be applied so finished surfaces shall be free from runs, drops, ridges, waves, laps, brush marks, and variations of color, texture, and finish. Hiding shall be complete.

2. Each coat shall be applied as film of uniform thickness. Rollers for applying paints and enamels shall be of a type designed for the coating to be applied and the surface to be coated. Special attention shall be given to insure that all surfaces including edges, corners, crevices, welds, and rivets receive a film thickness equivalent to that of adjacent painted surfaces. Adequate ventilation shall be provided during paint application.

3. Respirators shall be worn by all persons engaged in spray painting. Adjacent areas shall be protected by the use of drop cloths or other approved precautionary measures

shall be taken. The first coat shall include repeated touching up of suction spots or overall applications of primer or sealer to produce a uniform color and gloss. Paint shall be applied only to surfaces that are completely free of surface moisture as determined by sight or touch.

4. Coating Progress
    a. Sufficient time shall elapse between successive coats to permit proper drying. This period shall be modified as necessary to suit adverse weather conditions. Oil base or oleoresinous solvent-type paints shall be considered dry for recoating when the paint feels firm, does not deform or feel sticky under moderate pressure of the thumb, and the application of another coat of paint does not cause lifting or loss of adhesion of the undercoat.
5. Metal Surfaces
    a. First coats other than vinyl paints or vinyl-type wash coats shall be applied by brush.
6. Time Between Surface Preparation and Painting
    a. Surfaces that have been cleaned, pre-treated and otherwise prepared for painting shall be given a coat of the specified first coat as soon as practicable after such pretreatment has been completed, but prior to any deterioration of the prepared surface.
7. Safety
    a. All work shall be performed by a qualified applicator approved by the manufacturer or his designated representative. Applicator shall be in conformance with OSHA regulations for construction and knowledge of all safety requirements in applying, handling, and disposing of all chemicals at the job site. Material Safety Data Sheets (MSDS) for each chemical shall be available and followed at all times.

3.07 MECHANICAL EQUIPMENT

A. Refer to mechanical Sections for prime painting. Do not finish paint over nameplates or other identification plates.

3.08 CLEANING

A. As work proceeds and upon completion, promptly remove paint where spilled, splashed, or spattered.

B. During progress of work keep premises free from any unnecessary accumulation of tools, equipment, surplus materials and debris.

C. Upon completion of work leave premises neat and clean, to the satisfaction of the Resident Engineer.

3.09 PAINTING SCHEDULE

A. The following Painting Schedule prescribes the surfaces to be painted, required surface preparation, and the number, specification types, and dry film thickness of coats of paint.

Surfaces	Surface Preparation	1st Coat	2nd Coat	3rd Coat
Galvanized surfaces touch-up	Vinyl wash, see Paragraph 3.05, “Preparation of Surfaces”	cold galvanizing paint 3-mils	cold galvanizing paint 3-mils	none
Ferrous surfaces of mechanical equipment specified to be shop primed	Blast clean, see Paragraph 3.05, “Preparation of Surfaces”	cold galvanizing paint 3-mils at the manufacturer shop	polyamide epoxy finish 3-mils	polyamide epoxy finish 3-mils
Ferrous surfaces of mechanical piping and valves	Blast clean, see Paragraph 3.05, “Preparation of Surfaces”	polyamide epoxy primer 3-mils	polyamide epoxy finish 3-mils	polyamide epoxy finish 3-mils
Ferrous surfaces of all non-galvanized metal	Clean, see Paragraph 3.05, “Preparation of Surfaces”	polyamide epoxy primer 3-mils	alkyd enamel finish 2-mils	alkyd enamel finish 3-mils

**** End of Section ****

DIVISION 10 – SPECIALTIES (Not Used)

DIVISION 11 – EQUIPMENT

SECTION 11400

SUBMERSIBLE PUMPS

PART 1 - GENERAL

1.01 DESCRIPTION

A. The Contractor shall provide and install a complete submersible type well pump including intake strainer, pump bowl assembly, column, surface pedestal and submersible electric motor. The table below lists current data for each well and estimated pump sizes. **Final pump sizes and intake depth settings will be determined by the Engineer after results from the post cleaning test pumping are received.**

Operating and Site Conditions	Well Sites (Phase 3)								
	Units	**94**	**107**	**120**	**122**	**126**	**129**	**133**	**138**
Well casing diameter	in.	14	14	12	12	12	14	16	14
Well total depth	ft-bgs	362	318	440	422	432	300	514	408
Static water level (below casing top)	ft-bgs	40	78	73	66	68	70	63	110
Pumping level (at design flow)	ft-bgs	67	106	85	78	85	80	88	127
Total pump head (exclusive of discharge column)	ft-bgs	189	219	198	189	210	196	204	229
Estimated pump capacity	gpm	845	725	573	589	589	685	940	632
Estimated pump horsepower	HP	75	50	50	50	50	50	100	75
Pump discharge pipe diameter	in.	8	8	8	8	8	8	8	8
Well screen depth	ft-bgs	288	91	265	230	188	136	260	113
Pump setting depth	ft-bgs	120	140	130	120	130	125	140	160
Operating voltage	Volts	480 volts AC, 3 phase, 3 wire							

PART 2 - PRODUCTS

2.01 GENERAL

A. All components of each pump system provided under the pump specification sections shall be entirely compatible. Each unit of pumping equipment shall incorporate all basic mechanisms, couplings, electric motors, variable speed controls, necessary mountings, and appurtenances.

2.02 MATERIALS

A. Motor

1. The 1800-rpm submersible electric motor shall conform to the latest National Electrical Manufacturers Association (NEMA) specifications for submersible motors. The motor thrust bearing shall be sized to carry the weight of all rotating parts plus the hydraulic thrust of the motor regardless of the direction of rotation.
2. The motor shall be of squirrel cage induction type, suitable for across the line starting (and variable speed operation in conjunction with an adjustable frequency drive) and continuous operation in 65°F water. The output shaft shall be Type 416 stainless steel. All fasteners used within the well casing shall be of stainless steel.

B. Pump/Motor Shaft Coupling

1. The coupling shall be of Type 416 stainless steel and shall be capable of transmitting the total torque of the unit, regardless of the direction of rotation.

C. Inter-Connector

1. The inter-connector shall be constructed of close grained cast iron and shall connect the motor and bowl unit. The inter-connector shall include a suction screen which has a net open area of at least four (4) times the eye of the impeller. The screen shall be made of corrosion resistant material.

D. Pump

1. The pump supplied under this specification shall be of the multi stage turbine type. It shall be fitted with a stainless steel (Type 410 or 416) shaft. Impellers shall be of SAE 40 bronze or stainless steel. Bowls (impeller housings) shall be of close grained cast iron. Bowls shall include sufficient clearance for impeller movement resulting from the combination of thermal expansion, dead weight, and hydraulic thrust.
2. Impellers shall be securely fastened to the shaft using stainless steel split bushings. Impellers shall be adjustable vertically by an external means.
3. Pump shaft bearings shall be of SAE 660 bronze and shall be located above and below each impeller. The length of the top and bottom bearings shall be a minimum of three (3) times the shaft diameter.
4. The pump shall be designed for continuous operation in 65°F water of the chemical character described in the attached analysis results. Pump shall be selected for a minimum efficiency at the design flow rate of seventy-five percent (75%).

E. Wellhead Base Plate

1. The base plate shall be constructed of carbon steel plate of a minimum 1-inch thickness and shall rigidly support the weight of the motor, column pipe, pump, cable bowl assembly and column of water. It shall be equipped with a nominal production flow connection to the system. Baseplate dimensions shall be as shown on the Plans.

F. Pump Discharge Pipe

1. The discharge pipe shall be standard weight carbon steel pipe sized as shown above. Pipe shall be A53-GRB or API-5L GRB and shall have ANSI B1.20.1 standard tapered pipe threads per AWWA E101.

G. Submersible Cable

1. The cable shall be sized to limit the voltage drop to less than two percent (2%) at the motor terminals and shall meet NEC requirements. Three separate conductors shall be furnished. The conductor insulation shall be water and oil resistant and suitable for continuous immersion.
2. The length of the cable to be furnished shall be the sum of the pump setting depth, including the bowl assembly, plus four (4) feet for each 50-feet of setting. The cable will be suitably supported from the pump column.

PART 3 - EXECUTION

3.01 INSTALLATION

A. General

1. Pumping equipment shall be installed in accordance with the manufacturer's written recommendations.

B. Alignment

1. All equipment shall be field tested to verify proper alignment, operation as specified, and freedom from binding, scraping, vibration, shaft runout, or other defects. Pump drive shafts shall be measured just prior to assembly to ensure correct alignment without forcing. Equipment shall be secure in position and neat in appearance.

C. Lubricants

1. The Contractor shall provide the necessary oil and grease for initial operation.

3.02 FIELD TESTS

A. Where required by the individual pump specification sections, each pump system shall be field tested after installation to demonstrate satisfactory operation without excessive noise, vibration, cavitation, or overheating of bearings.

B. Field testing will be witnessed by the Engineer. The Contractor shall furnish three (3) days advance notice of field testing.

C. In the event any pumping system fails to meet the test requirements, it shall be modified and retested as above until it satisfies the requirements.

**** End of Section ****

DIVISION 12 – FURNISHINGS (Not Used)

DIVISION 13 – SPECIAL CONSTRUCTION (Not Used)

DIVISION 14 – CONVEYANCE SYSTEMS (Not Used)

DIVISION 15 – MECHANICAL (Not Used)

DIVISION 16 – ELECTRICAL

SECTION 16010

ELECTRICAL WORK

PART 1 - GENERAL

1.01 SCOPE

A. This Section covers all electrical work, which consists of furnishing all labor, equipment and materials required for the complete electrical system as specified and as shown on the Plans.

B. Work Included

1. Equipment and materials to be furnished and installed by the Contractor under Division 16 shall include the following:
    a. Section 16012, “Seismic Restraint for Electrical Equipment”
    b. Section 16013, “Short Circuit Study, Protection Device Evaluation, Coordination Study, and Arc Flash Hazard Analysis”
    c. Section 16110, “Raceway Systems”
    d. Section 16120, “Low Voltage Wire and Cable”
    e. Section 16432, “Low Voltage Commercial Safety Socket”
    f. Section 16480, “Low Voltage Motor Control Center”
    g. Section 16530, “Lighting”
    h. Section 16950, “Operational Testing”

1.02 SUBMITTALS

A. Descriptive literature for all materials furnished under this Section shall be submitted in accordance with Section 01330, “Submittals”, of these specifications.

1.03 CONSTRUCTION POWER

A. The Contractor shall provide his own temporary construction lighting and electrical power as required in areas where work is being performed.

1.04 DRAWINGS

A. The Contractor shall verify all conditions at each site, and review all measurements to insure adequate space for installation of equipment.

B. The locations of conduit and equipment, as indicated on the drawings, are in the desired locations. However, locations may be adjusted to meet the electrical and structural conditions as required.

C. The drawings are essentially diagrammatic to the extent that offsets, bends, pull boxes, conduits, special fittings and the exact locations may not be completely indicated. Furnish and install all conduit and equipment in available locations as required by conditions found at the site and as approved by the Engineer. Carefully study the drawings and premises in order to determine the best methods, exact locations, routes, noting the building obstructions, and etc. for conduit and equipment installation.

1.05 ELECTRICAL WORK CLOSEOUT

A. Prepare the following items and submit to the Engineer before final acceptance:

1. Copies of all test results as required under this Section 16950, “Operational Testing”.
2. Copies of as-built record drawings and O&M manuals as required under Section 01330, “Submittals”.
3. Notify the Engineer in writing when installation is complete and that a final inspection of this work can be performed. In the event defects or deficiencies are found during this final inspection they shall be corrected to the satisfaction of the Engineer before final acceptance can be issued.

B. Electrical and control equipment shall be cleaned both inside and outside.

1.06 COORDINATION WITH SUB-CONTRACTORS

A. General Contractor shall be responsible to provide all sub-Contractors with all specifications and drawings that pertain to their work on this project.

1.07 INTERRUPTION OF SERVICES

A. Any interruption of electrical power for the performance of this work shall be made only after consultation with the City and the Superintendent of Plant Operations, and shall be only at such a time and of such duration as directed.

B. The Contractor shall be responsible for coordination with SMUD for all power requirements.

PART 2 - PRODUCTS

2.01 REFERENCES STANDARDS

A. Work installed or material used shall comply with latest version of NEC, UL, and other applicable rules and standards of the industry.

B. Equipment Anchors: Securely anchor electrical equipment. Anchoring shall have the capability of withstanding seismic forces per the 1994 California Code of Regulations, Title 24, Part 2, Section 2312, Seismic Zone 3, with Cp = 1.0 and I =1.5. The Cp may be two-thirds of the value specified for components mounted on foundations at grade or on floor slabs on earth grade.

2.02 MISCELLANEOUS EQUIPMENT/MATERIALS

A. The Contractor shall include in his work furnishing and installing of the following:

1. Warning Signs
   a. Unless otherwise shown on the plans, use signs of standard manufacture, #18 gauge minimum steel, baked enamel finish, red letters on white background. Provide warning signs per Title 24, CAC.
2. Fuses
   a. Furnish and install fuses of proper type and rating suitable for equipment protected. Upon acceptance of installation, all fusible disconnect switches shall be equipped with correct fuses.

2.03 SWITCHBOARDS, MOTOR CONTROL CENTERS, AND PLC CABINET INTERNAL WIRING

A. Interior wiring shall conform to the following:

1. Rubber grommets shall be used where wiring passes through holes in sheet metal unless indicated on the drawing.
2. Wiring shall not be tapped or spliced except at device terminals or on terminal blocks.
3. No more than two terminations shall be made at any one terminal.
4. Each terminal connection shall have a pre-insulated ring-tongue, crimp-type connector, and applied to the wire end with a ratchet type or pneumatic operated power tool.
5. B8, Class B minimum stranding and the wire shall have copper conductors and shall be minimum #16 for control and minimum #12 for power circuits. Hinge wiring shall be Class D minimum stranding. Solid wire is not allowed on this project.
6. All MCC and PLC cabinet wiring shall be TEW or MTW, unless otherwise specified. All switchboard wiring shall be SIS, unless otherwise specified. Switchboard wire color shall be gray. MCC wiring colors shall be as follows:

Neutral:	White
Fused Control Power:	Red
24-Volt Circuits:	Blue
External 120-Volt Circuits:	Yellow
Power Circuits Before CPT:	Black

7. All wiring shall be marked using tags with like numbers on both ends with wire numbers shown on the drawings. Tags using adhesives, tapes, or markers are not acceptable.
8. Tags shall be white heat-shrinkable with thermal transfer printing, three-to-one shrink ratio, 2-inches long and shall meet UL 224. Raychem Tyco shrink mark heat shrinkable sleeves or approved equal. Labels shall be readable after heat shrinking.

2.04 NAMEPLATES

A. Indoor

1. Laminated phenolic plastic, black front and back, white core, engraved to show white lettering. Use 3/16-inch high lettering at push button stations, thermal overload switches, receptacles, wall switches, and similar devices, where nameplate is attached to device plate. Use 1/4-inch high lettering at all other locations, unless otherwise specified or detailed. Engraved lettering shall be uniform block style all upper case.
2. Nameplates 1-1/2-inches high and smaller shall be 1/16-inches thick. Nameplates larger than 1-1/2-inches high shall be 1/8-inches thick. Edges of nameplates shall be beveled. Nameplates shall be fastened using nickel plated brass, cadmium plated steel or stainless steel screws. Attachment of nameplates with adhesive is not acceptable.

B. Outdoor

1. Engraved or embossed stainless steel.

C. Inscription

1. If detailed on plans, use inscription exactly as shown; otherwise, describe adequately the function or use of equipment involved.

2.05 PAINTING AND FINISHES

A. Boxes factory finished as follows:

1. Surface Mounted Boxes - One prime coat over galvanizing, one coat of light gray synthetic enamel or lacquer.
2. Flush Mounted Boxes - Galvanized only.

B. A three (3) coat finish consisting of primer, undercoat, and alkyd enamel finish of light gray, ANSI No. 61, shall be applied to all electrical enclosures unless otherwise specified.

2.06 HOUSE KEEPING PAD

A. All switchboard and other free standing equipment and panels shall be placed on a 3-1/2-inch thick concrete house-keeping pad as directed by the Engineer. The pad shall be so constructed that after the installation of the panel there shall be 3-inches in the front and on both sides of the panel and 2-inches on the back of the panel.

B. The pad shall contain a formed raceway for conduits.

2.07 INDICATING LIGHTS, PUSH BUTTONS, AND TERMINAL STRIPS

A. Indicating lights shall be industrial, weatherproof NEMA 4/4X, transformer type, with LED type lamps, and push to test. Push buttons and terminal strips shall be NEMA style.

2.08 SPARE PARTS

A. Fuses

1. One (1) carton (3 fuses, minimum) of each fuse used on this project.

2.09 RELAYS, TIMERS, AND SWITCHES

A. Contacts for all relays, timers, and switches shall be rated for 10A minimum.

PART 3 - EXECUTION

3.01 INSTALLATION

A. All equipment installed by the Contractor shall operate to the Engineer's satisfaction. The Contractor shall be responsible for, and shall correct by repair or replacement, at his own expense, equipment which, in the opinion of the Engineer has been damaged by faulty mechanical or electrical assembly by the Contractor.

B. The Engineer reserves the right to require changes in equipment location without incurring additional costs.

C. Outdoor steel items on this job shall be manufactured from cold rolled low carbon steel. Outdoor steel mounting holes and cutting shall all be finished and then the item shall be hot dipped galvanized confirming with ASTM A123 and A153. Outdoor hardware on this job shall be Type A316 stainless steel.

**** End of Section ****

SECTION 16012

SEISMIC RESTRAINT FOR ELECTRICAL EQUIPMENT

PART 1 - GENERAL

1.01 SCOPE

A. Work Included

1. Seismic restraint for new electrical equipment.

B. Related Work

1. The provisions of Section 16010, “Electrical Work”, of these specifications shall apply, unless otherwise specified.

1.02 SUBMITTALS

A. Submit in accordance with Section 01330, “Submittals”, of these specifications.

B. Submit equipment anchoring methods. Include anchoring locations, anchor types and minimum anchor embedment depths.

PART 2 - MATERIALS

2.01 SEISMIC ANCHORING AND RESTRAINTS

A. Equipment Anchors

1. Securely anchor electrical equipment. Anchoring shall have the capability of withstanding seismic forces per the 1994 California Code of Regulations, Title 24, Part 2, Section 2312, Seismic Zone 3, with Cp = 1.0 and I =1.5. Cp maybe be two-thirds of the value specified for components mounted on foundations at grade or on floor slabs on earth grade.

PART 3 - EXECUTION

3.01 EQUIPMENT AND RACEWAYS

A. Install equipment anchors and raceway supports in accordance with the final shop drawings and manufacturer’s recommendations. Properly torque all bolts to the required values.

**** End of Section ****

SECTION 16013

SHORT CIRCUIT STUDY, PROTECTIVE DEVICE EVALUATION, COORDINATION STUDY, AND ARC FLASH HAZARD ANALYSIS

PART 1 – GENERAL

1.01 SUMMARY OF WORK

A. The Contractor shall provide the following electrical power system studies for all eight (8) wells:

1. Short Circuit Study
2. Protective Device Evaluation
3. Coordination Study
4. Arc Flash Hazard Analysis

The content of each study is specified in Part 3, "Execution", of this Section.

B. The City will provide the contractor with the information from the utility such as: transformer data, utility contribution, and transformer fuse data. The Contractor shall be responsible for supplying all remaining information and data required for the study.

C. If during the study, the Contractor finds any inadequacies in the equipment or protective devices, they shall make recommendations for improvements as soon as they are identified.

D. The Contractor shall provide the City with an electronic copy of the short circuit study, protective device evaluation, coordination study, and arc flash hazard analysis on a CD. **In addition, the CD shall include all SKM files used to create the study**.

E. The study and analysis shall be performed using the latest version of the SKM Systems Analysis Power Tools for Windows (PTW) software program.

1.02 SUBMITTALS

A. Submit a draft of the final report for review by the Engineer. The report shall include the following as further described in Part 3, "Execution":

1. Summary of the results of the short circuit study, the protective device evaluation, and coordination studies for each scenario.
2. Description, purpose, basis and scope of the study.
3. Single line diagram for each scenario with the incident energy shown at bus.
4. Tabulations of electrical capacities and characteristics of the equipment and protective devices.
5. Table comparing the calculated short circuit and the equipment ratings for each scenario.
6. Coordination curves showing the proposed settings with the characteristics of the equipment and protective devices shown graphically on industry standard graph paper for each scenario.

7. Arc Flash Hazard Analysis to include computed incident energy levels and flash protection boundary distances at each bus for each scenario.
8. Summary showing the settings of all protective devices.

B. Submit the final report after receiving comments by the Engineer.

1.03 QUALIFICATIONS

A. The short-circuit, protective device evaluation, protective device coordination and arc flash hazard analysis studies shall be conducted under the supervision and approval of a Registered Professional Electrical Engineer skilled in performing and interpreting the power system studies.

B. The Registered Professional Electrical Engineer shall be a full-time employee of the approved engineering firm.

C. The Registered Professional Electrical Engineer shall have a minimum of five (5) years of experience in performing power system studies.

D. The engineering firm shall demonstrate experience with Arc Flash Hazard Analysis by submitting names of at least ten (10) actual arc flash hazard analyses it has performed in the last two (2) years.

PART 2 - PRODUCTS

2.01 REFERENCES

A. The publications referred to hereinafter form a part of this specification to the extent referenced. The publications are referred to in the text by the basic designation only. Unless otherwise indicated, the latest edition of referenced publications in effect at the time of the bid shall govern. In case of conflict between the requirements of this Section and those of the listed documents, the requirements of this Section shall prevail.

Institute of Electrical and Electronics Engineers (IEEE)	
IEEE 141	Recommended Practice for Electric Power Distribution and Coordination of Industrial and Commercial Power Systems
IEEE 242	Recommended Practice for Protection and Coordination of Industrial and Commercial Power Systems
IEEE 399	Recommended Practice for Industrial and Commercial Power System Analysis
IEEE 241	Recommended Practice for Electric Power Systems in Commercial Buildings
IEEE 1015	Recommended Practice for Applying Low-Voltage Circuit Breakers Used in Industrial and Commercial Power Systems
IEEE 1584	Guide for Performing Arc-Flash Hazard Calculations

American National Standards Institute (ANSI)	
ANSI C57.12	Standard General Requirements for Liquid-Immersed Distribution, Power, and Regulating Transformers
ANSI C37.13	Standard for Low Voltage AC Power Circuit Breakers Used in Enclosures
ANSI C37.010	Standard Application Guide for AC High Voltage Circuit Breakers Rated on a Symmetrical Current Basis
ANSI C37.41	Standard Design Tests for High Voltage Fuses, Distribution Enclosed Single-Pole Air Switches, Fuse Disconnecting Switches and Accessories

National Fire Protection Association (NFPA)	
NFPA 70	National Electrical Code (Latest Edition)
NFPA 70E	Standard for Electrical Safety in the Workplace

2.02 DATA COLLECTION

A. The Contractor shall provide all input data for the facility.

B. Input data for the study shall include, but not be limited to the following:

1. Feeder input data including feeder type (cable or bus), size, length, number per phase, conduit type (magnetic or non-magnetic) and conductor material (copper or aluminum).
2. Utility transformer input data, including winding connections, secondary neutral-ground connection, primary and secondary voltage ratings, kVA rating, impedance, % taps, and phase shift will be provided by the City.
3. Reactor data, including voltage rating, and impedance.
4. Generation contribution data, (synchronous generators and Utility), including short-circuit reactance (X”d), rated MVA, rated voltage, three-phase and single line-ground contribution (for Utility sources), and X/R ratio.
5. Motor contribution data (induction motors and synchronous motors), including short-circuit reactance, rated horsepower or kVA, rated voltage, and X/R ratio.
6. Utility minimum and maximum contribution data will be provided by the City.
7. Capacitor data.

2.03 FINAL REPORT

A. The results of the short-circuit study, protective device evaluation study, protective device coordination and arc flash hazard analysis studies shall be summarized in a final report. Three (3) copies of the final report shall be submitted to the City.

B. If applicable, include fault contribution of existing motors in the study. The Contractor shall obtain required existing equipment data, if necessary, to satisfy the study requirements.

C. The report shall include the following sections:

1. Executive summary
2. Descriptions, purpose, basis and scope of the study
3. Tabulations of circuit breaker, fuse and other protective device ratings versus calculated short circuit duties for the scenario that produces the worst three phase fault currents
4. Protective device time versus current coordination curves, tabulations of relay and circuit breaker trip unit settings for each scenario
5. Fault current calculations including a definition of terms and guide for interpretation of the computer printout for each scenario.
6. Details of the incident energy and flash protection boundary calculations for each scenario
7. Recommendations for reducing the amount of incident energy and/or improving system coordination for each scenario
8. One-line diagram for each scenario
9. All requirements under Section 16013, “Short Circuit Study, Protective Device Evaluation, Coordination Study, and Arc Flask Hazard Analysis”, Paragraph 1.02, “Submittals”

D. The Short-Circuit study shall include, but not be limited to the following reports:

1. Low Voltage Fault Report shall include a section for three-phase and unbalanced fault calculations and shall show the following information for each applicable location:
    a. Voltage
    b. Calculated fault current magnitude and angle
    c. Fault point X/R ratio
    d. Equivalent impedance
2. Momentary Duty Report shall include a section for three-phase and unbalanced fault calculations and shall show the following information for each applicable location:
    a. Voltage
    b. Calculated symmetrical fault current magnitude and angle
    c. Fault point X/R ratio
    d. Calculated asymmetrical fault currents:
        i. Based on fault point X/R ratio
        ii. Based on calculated symmetrical value multiplied by 1.6
        iii. Based on calculated symmetrical value multiplied by 2.7
    e. Equivalent impedance
3. Interrupting Duty Report shall include a section for three-phase and unbalanced fault calculations and shall show the following information for each applicable location:

a. Voltage
b. Calculated symmetrical fault current magnitude and angle
c. Fault point X/R ratio
d. No AC Decrement (NACD) Ratio
e. Equivalent impedance
f. Multiplying factors for 2, 3, 5 and 8 cycle circuit breakers rated on a symmetrical basis
g. Multiplying factors for 2, 3, 5 and 8 cycle circuit breakers rated on a total basis

E. Provide recommended Protective Device Settings:
1. Phase (50/51) and Ground (50/51) Relays:
a. Current transformer ratio
b. Inverse current setting
c. Inverse current curve setting
d. Inverse current time setting
e. Instantaneous current setting
f. Instantaneous current time setting
g. Recommendations on improved relaying systems, if applicable.
2. Circuit Breakers:
a. Adjustable pickups and time delays (long time, long time delay, short time, short time delay, ground pickup, and ground delay)
b. Adjustable time-current characteristic
c. Adjustable instantaneous pickup
d. Recommendations on improved trip systems, if applicable.

F. Incident energy and flash protection boundary calculations
1. Arcing fault magnitude
2. Protective device clearing time
3. Duration of arc
4. Arc flash boundary
5. Working distance
6. Incident energy
7. Hazard Risk Category
8. Recommendations for arc flash energy reduction

G. Provide a hard copy of the arc flash labels.

H. The Contractor shall provide the City with an electronic copy of the software program files used to create the short circuit study, protective device evaluation, coordination study, and arc flash

hazard analysis on a CD. These program files shall be the actual SKM program files.

I. For medium voltage facilities provide the following relay settings for all relays:

1. Instantaneous overcurrent (relay 50 & 50G and/or 50N)
2. AC time overcurrent (relay 51, 51V, & 51G and/or 51N)
3. For motor relays also provide thermal overload curve and settings, if applicable.
4. All other relay settings will remain.

PART 3 - EXECUTION

3.01 ELECTRICAL POWER SYSTEM STUDIES

A. The study shall be performed for the following scenarios for each of the eight (8) wells:

1. Facility fed from utility power using the maximum available fault current from the utility with all loads on.
2. Facility fed from utility power using the minimum available fault current from the utility with all loads off.
3. Facility fed from a portable or facility generator with all loads on. The consultant shall contact the City for the size of the portable generator that will be used to power this facility.

A short-circuit analysis, protective device evaluation study, protective device time-current coordination analysis, and an arc flash hazard analysis shall be performed for each scenario. Each scenario shall be labeled separately within the final report.

Each scenario shall model the utility, utility cut outs and/or transformer fuses, utility transformer, and the entire City facility.

B. Short-Circuit Analysis

1. Calculate the maximum rms symmetrical three-phase short-circuit current at each bus and significant locations in the electrical system.
2. Appropriate motor short-circuit contribution shall be included at the appropriate locations in the system so that the computer calculated values represent the highest short-circuit current the equipment will be subjected to under fault conditions.
3. A tabular computer printout shall be included which lists the calculated short-circuit currents, X/R ratios, source impedance, equipment short-circuit interrupting or withstand current ratings, and notes regarding the adequacy or inadequacy of the equipment.
4. The study shall include a computer printout of input circuit data including conductor lengths, number of conductors per phase, conductor impedance values, insulation types, transformer impedances and X/R ratios, motor contributions, and other circuit information as related to the short-circuit calculations.
5. The system one-line diagram shall be computer generated and will clearly identify individual equipment buses, bus numbers used in the short-circuit analysis, cable and bus connections between the equipment, calculated maximum short-circuit current at each bus location and other information pertinent to the computer analysis.

6. The computer printout shall identify the maximum available short-circuit current in rms symmetrical amperes and the X/R ratio of the fault current for each bus/branch calculation.
7. A comprehensive discussion section evaluating the adequacy or inadequacy of the equipment must be provided and include recommendations as appropriate for improvements to the system.
8. Use actual conductor impedances if known. If unknown, use typical conductor impedances based on IEEE Standard 141-1993.
9. Transformer design impedances shall be used when test impedances are not available.
10. Calculate short-circuit momentary and interrupting duties for a three-phase bolted fault at each:
    a. Electric utility's supply termination point
    b. Incoming switchgear
    c. Unit substation primary and secondary terminals
    d. Low voltage switchgear
    e. Motor control centers
    f. Standby generators and automatic transfer switches
    g. Branch circuit panelboards
    h. Other significant locations throughout the system.
11. For grounded systems, provide a bolted line-to-ground fault current study for areas as defined for the three-phase bolted fault short-circuit study.

C. Protective Device Evaluation Study

1. Evaluate protective devices interrupt ratings to the short circuit calculations performed from the short circuit analysis to determine if all protective devices are rated to withstand the calculated short circuits.
2. Evaluate the adequacy of switchgear, motor control centers, and panel board bus bars to withstand short-circuit stresses
3. Provide a report showing the calculated fault current at each protective device versus the protective devices interrupt rating.

D. Protective Device Time-Current Coordination Analysis

1. The time-current coordination analysis shall include the determination of phase and ground settings, ratings, or types for all protective devices at each facility shown in Appendix A.
2. Where necessary, an appropriate compromise shall be made between system protection and service continuity with system protection and service continuity considered to be of equal importance. In addition, breaker and/or relay settings shall be adjusted to reduce the amount of incident energy while providing proper coordination.
3. Provide computer generated log-log plots that indicate the degree of system protection and coordination by displaying the time-current characteristics (TCC) of series

connected overcurrent devices and other pertinent system parameters for each motor. The motor starting curve and overload device shall also be shown on this TCC. If an MCP and overload device are used in combination then the MCP curve shall be cut off where it intercepts the overload curve.

4. Provide a TCC for the main breaker that shows the arcing current on the bus adjacent to the main breaker (load side) for the worst case of incident energy for scenario one or two. Provide a TCC for the generator breaker that shows the arcing current on the bus adjacent to the generator breaker (load side) for scenario three. These TCCs will be used to show that the breaker has been set properly to clear the arcing fault and to reduce the incident energy on the load side of the main and generator breakers.
5. Computer printouts shall accompany the log-log plots and will contain descriptions for each of the devices shown, settings of the adjustable devices, the short-circuit current availability at the device location when known, and device identification numbers to aid in locating the devices on the log-log plots and the system one-line diagram.
6. The study shall include a separate, tabular computer printout containing the suggested device settings of all adjustable overcurrent protective devices, the equipment where the device is located, and the device number corresponding to the device on the system one-line diagram.
7. A computer generated system one-line diagram shall be provided which clearly identifies individual equipment buses, bus numbers, device identification numbers and the maximum available short-circuit current at each bus when known.
8. A discussion section which evaluates the degree of system protection and service continuity with overcurrent devices, along with recommendations as required for increasing system protection or device coordination.
9. Significant deficiencies in protection and/or coordination shall be called to the attention of the engineer and recommendations made for improvements as soon as they are identified. Report shall also include suggestions to:
    a. Improve coordination between upstream and downstream devices.
    b. Reduce fault current clearing times of upstream devices.
    c. Identify equipment protection boundary and inrush current conflicts.
10. Each TCC shall show the SKM data block for each protective device shown.
11. Provide adequate time margins between device characteristics such that selective operation is provided, while providing proper protection and reducing levels of incident energy.
12. Include on each TCC graph, a complete title and one-line diagram with legend identifying the specific portion of the system covered.
13. Terminate device characteristic curves at a point reflecting maximum symmetrical or asymmetrical fault current to which the device is exposed.
14. Identify the device associated with each curve by manufacturer type, function, and, if applicable, tap, time delay, and instantaneous settings recommended.
15. Plot the following characteristics on the TCC graphs, where applicable:
    a. Electric utility's overcurrent protective device

b. Medium voltage equipment overcurrent relays

c. Medium and low voltage fuses including manufacturer's minimum melt, total clearing, tolerance, and damage bands

d. Low voltage equipment circuit breaker trip devices, including manufacturer's tolerance bands

e. Transformer full-load current, magnetizing inrush current, and ANSI through-fault protection curves

f. Conductor damage curves

g. Ground fault protective devices, as applicable

h. Pertinent motor starting characteristics and motor damage points, where applicable

i. Pertinent generator short-circuit decrement curve and generator damage point

j. The largest feeder circuit breaker in each motor control center and applicable panelboard

16. For medium voltage motor starters with vacuum contactors and relays the contractor shall take into account the vacuum contactor interrupt rating and drop out time when setting the relay.

17. For low voltage motor starters the contractor shall plot the MCP and overload curves. The MCP curve shall be terminated where it intercepts the overload curve.

E. Arc Flash Hazard Analysis

1. The arc flash analysis shall be performed according to the IEEE Std. 1584.1 – 2013, "IEEE Guide for the Specification of Scope and Deliverable Requirements for an Arc-Flash Hazard Calculation Study in Accordance with IEEE Std 1584™" The proposal shall contain language on how this requirement will be full filled and what are the deliverables.

2. Provide a detailed arc-flash hazard analysis report with computed incident energy levels (Calories per square centimeters) and flash protection boundary distances (inches) at each bus in the electrical system. The electrical system shall contain a bus on the line and load side for each main breaker or switch.

3. The Arc-Flash Hazard Analysis shall include all significant locations in 240-Volt and 208-Volt systems fed from transformers equal to or greater than 125-kVA where work could be performed on energized parts.

4. The contractor shall analyze and adjust if necessary the setting of the protective devices in order to reduce the incident levels to a level less than dangerous if possible while maintaining proper coordination.

5. Safe working distances shall be based upon the calculated arc flash boundary considering using an incident energy level of 1.2 cal/cm^2.

6. When performing incident energy calculations on the line side of a main and/or generator breaker, the line side and load side contributions must be included in the fault calculation.

7. The short-circuit calculations and the corresponding incident energy calculations for multiple system scenarios must be compared and the greatest incident energy must be uniquely reported for each equipment location. Calculations must be performed to represent the maximum and minimum contributions of fault current magnitude for all normal and emergency operating conditions. The minimum calculation will assume that the utility contribution is at a minimum and will assume a minimum motor contribution (all motors off). Conversely, the maximum calculation will assume a maximum contribution from the utility and will assume the maximum amount of motors to be operating. Calculations shall take into consideration the parallel operation of synchronous generators with the electric utility, where applicable.
8. The incident energy calculations must consider the accumulation of energy over time when performing arc flash calculations on buses with multiple sources. Iterative calculations must take into account the changing current contributions, as the sources are interrupted or decremented with time. Fault contribution from motors and generators should be decremented as follows:
    a. Fault contribution from induction motors should not be considered beyond 3-5 cycles.
    b. Fault contribution from synchronous motors and generators should be decayed to match the actual decrement of each as closely as possible (e.g. contributions from permanent magnet generators will typically decay from 10 per unit to 3 per unit after 10 cycles).
9. Arc Flash calculations shall be based on actual overcurrent protective device clearing time. Maximum clearing time will be capped at two (2) seconds based on IEEE 1584-2002 section B.1.2. Where it is not physically possible to move outside of the flash protection boundary in less than two (2) seconds during an arc flash event, a maximum clearing time based on the specific location shall be utilized.
10. When appropriate, the short circuit calculations and the clearing times of the phase overcurrent devices will be retrieved from the short-circuit and coordination study model. Ground overcurrent relays should not be taken into consideration when determining the clearing time when performing incident energy calculations.
11. For each equipment location with a separately enclosed main device (where there is adequate separation between the line side terminals of the main protective device and the work location), calculations for incident energy and flash protection boundary shall include both the line and load side of the main breaker.
12. Mis-coordination should be checked amongst all devices within the branch containing the immediate protective device upstream of the calculation location and the calculation should utilize the fastest device to compute the incident energy for the corresponding location.

3.02 ARC FLASH WARNING LABELS

A. Arc Flash Hazard warning stickers shall be sized 4”x6”. These labels shall be 3-mil matted vinyl film with a pressure sensitive adhesive and be resistive to moisture, solvents, and UV light. The label shall include the following information, at a minimum:
    1. Bus location designation which shall be easily identified on the single line drawing
    2. Nominal voltage

3. Flash protection boundary
4. Hazard risk category
5. Incident energy in cal/cm^2
6. Working distance in inches
7. Name of City facility and date

B. All labels will be based on recommended overcurrent device settings and will be provided after the results of the analysis have been presented to the City and after any system changes, upgrades or modifications have been incorporated in the system.

C. Labels shall be machine printed, with no field markings.

D. Arc flash labels should be similar to the labels shown in Appendix A except sized 4”x6”. Labels for dangerous conditions shall also state the following:

1. “No Safe PPE Exists”
2. “Energized Work Prohibited”
3. “Do Not Work On Live”

E. Arc flash labels shall be provided in the following manner and all labels shall be based on recommended overcurrent device settings for the worst case scenario:

1. For each 600, 480, 240, and applicable 208-Volt panel boards, one arc flash label shall be provided.
2. For each motor control center, one arc flash label shall be provided.
3. For each low voltage main switchgear section, one arc flash label shall be provided.
4. For each automatic transfer switch, one arc flash label shall be provided.
5. For each medium voltage main switchgear section, provide one arc flash label for each breaker and/or switch.
6. For each facility transformer provide an arc flash label for the primary side and another label for the secondary side.
7. Disconnect switches and remote motor starters.
8. Medium voltage disconnect switches and sectionalizing terminal cabinets.

F. For facilities containing generators provide the following arc flash labels:

1. One arc flash label for each generator.
2. One arc flash label for each generator breaker, line side.
3. One arc flash label for each ATS.

G. City will install all arc flash labels.

Appendix A: Sample Arc Flash Labels

DANGER

NO SAFE PPE EXISTS

ENERGIZED WORK PROHIBITED

502 in	Flash Hazard Boundary
232 cal/cm^2	Flash Hazard at 36 in
Dangerous!	DO NOT WORK ON LIVE!
21600 VAC	Shock Hazard when cover is removed
3	Glove Class
72 in	Limited Approach
31 in	Restricted Approach
10 in	Prohibited Approach June 05, 2014
Location:	BUS-1

WARNING

Arc Flash and Shock Hazard

Appropriate PPE Required

57 in	Flash Hazard Boundary
1.9 cal/cm^2	Flash Hazard at 36 in
Level 1	Arc-rated FR Shirt & Pants
4160 VAC	Shock Hazard when cover is removed
1	Glove Class
60 in	Limited Approach
26 in	Restricted Approach
7 in	Prohibited Approach June 06, 2014
Location:	Main Switchgear

WARNING

Arc Flash and Shock Hazard

Appropriate PPE Required

52 in	Flash Hazard Boundary
6.9 cal/cm^2	Flash Hazard at 18 in
Level 2	Arc-rated FR Shirt & Pants
480 VAC	Shock Hazard when cover is removed
00	Glove Class
42 in	Limited Approach
12 in	Restricted Approach
1 in	Prohibited Approach June 06, 2014
Location:	Low Voltage Feeder CB

WARNING

Arc Flash and Shock Hazard

Appropriate PPE Required

57 in	Flash Hazard Boundary
1.9 cal/cm^2	Flash Hazard at 36 in
Level 1	Arc-rated FR Shirt & Pants
4160 VAC	Shock Hazard when cover is removed
1	Glove Class
60 in	Limited Approach
26 in	Restricted Approach
7 in	Prohibited Approach June 06, 2014
Location:	Medium Voltage MCC

WARNING

Arc Flash and Shock Hazard

Appropriate PPE Required

26 in	Flash Hazard Boundary
2.1 cal/cm^2	Flash Hazard at 18 in
Level 1	Arc-rated FR Shirt & Pants
480 VAC	Shock Hazard when cover is removed
00	Glove Class
42 in	Limited Approach
12 in	Restricted Approach
1 in	Prohibited Approach June 06, 2014
Location:	Low Voltage MCC

WARNING

Arc Flash and Shock Hazard

Appropriate PPE Required

198 in	Flash Hazard Boundary
6.3 cal/cm^2	Flash Hazard at 36 in
Level 2	Arc-rated FR Shirt & Pants
4160 VAC	Shock Hazard when cover is removed
1	Glove Class
60 in	Limited Approach
26 in	Restricted Approach
7 in	Prohibited Approach June 06, 2014
Location:	Utility CB

**** End of Section ****

SECTION 16110

RACEWAY SYSTEMS

PART 1 - GENERAL

1.01 SCOPE

A. This Section covers the furnishing, installing and testing of all wireway, conduit, fittings, boxes, and supports as specified herein, as shown on the Drawings, and as required for a complete electrical installation.

B. The provisions of Section 16010, “Electrical Work”, of these specifications shall apply, unless otherwise specified in this Section.

C. The raceway system shall consist of the types and sizes as required and shall include all rigid steel conduit, flexible conduit, non-metallic conduit, wireway and accessories as required for the embedded and exposed raceway systems.

D. Conduit accessories shall include Condulet type fittings, expansion and deflection couplings, chase nipples, locknuts, grounding bushings, flexible conduit fittings, supports, materials for sealing openings, and all other devices and materials required to complete the electrical raceway system.

1.02 SUBMITTALS

A. Descriptive literature for all materials furnished under this Section shall be submitted in accordance with Section 01330, “Submittals”, of these Specifications.

B. Submittals for the material and equipment for the Raceway Systems shall include, but shall not be limited to, the following:

1. Catalog cuts showing manufacturer, catalog numbers, dimensions, weights and material for all raceway and accessories, specific items shall be identified on all catalog cuts.
2. Dimensioned shop drawings.
3. Certified test reports prepared by manufacturer.

PART 2 - PRODUCTS

2.01 REFERENCE STANDARDS

A. The publications referred to hereinafter form a part of this specification to the extent referenced. The publications are referred to in the text by the basic designation only. Unless otherwise indicated, the latest edition of referenced publications in effect at the time of the bid shall govern. In case of conflict between the requirements of this Section and those of the listed documents, the requirements of this Section shall prevail. Raceway systems supplied under this contract shall be designed, manufactured, and tested in accordance with the latest version of the following standards:

American National Standards Institute (ANSI)	
ANSI C33.92	Flexible Liquid-Tight Metal Conduit
ANSI C80.1	Rigid Steel Conduit
ANSI C80.4	Rigid Steel Conduit Fittings

National Electrical Manufacturers Association (NEMA)	
FB 1	Fittings and Supports for Conduit Cable Assemblies
TC-2 & TC-3	Non-Metallic Conduit and Fittings
RN 1	Rigid Steel Conduit PVC Jacketed

Underwriters Laboratories (UL)	
UL 514A	Metallic Outlet Boxes, Electrical
UL 870	Wireways, Auxiliary Gutters and Associated Fittings
UL 6	Rigid Metal Electrical Conduit
UL 651	Schedule 40 and 80 Rigid PVC Conduit

2.02 CONDUIT AND CONDUIT FITTINGS

A. Material for the conduit system shall conform to the following:

1. Steel Conduit

   a. Steel conduit, couplings, bends and nipples shall be in accordance with ANSI C80.1 and UL-6, hot-dip galvanized inside and outside after fabrication and then coated with a bichromate finish. Conduit sizes shall be not less than 3/4-inch IPS. All fittings shall be listed per UL 514.

2. Flexible Liquid-Tight Metal Conduit

   a. Flexible liquid-tight metal conduit shall be in accordance with ANSI C33.92 and shall be galvanized steel core with a copper bonding conductor between the spiral segments and an extruded synthetic jacket overall to insure a liquid-tight conduit. The conduit shall be 3/4-inch American Brass seal-tight Flexible conduit, or approved equal. Flexible conduit fittings shall be the grounding type and a design approved by the manufacturer for this type of flexible conduit.

3. Rigid Galvanized Steel Conduit PVC Bonded (RGS/PVC)

   a. Conduit shall conform to the requirements of NEMA RN1, Type A40. Plastic coated conduit shall be rigid galvanized steel conduit to which an epoxy acrylic primer and a 40-mil thick polyvinyl chloride coating has been bonded. Bond strength shall exceed the tensile strength of the plastic coat. All elbows shall be factory made and PVC coated. All fittings used with plastic coated conduit shall be similarly coated with not less than 40-mils of polyvinyl chloride and shall be provided with Type 316 stainless steel hardware. Furnish Occidental Coating

Company -type OCAL 40, Robroy Industries - type PLASTIBOND, or approved equal. For factory coated conduit, use overlapping PVC sleeves. Sleeves shall extend beyond end of fitting minimum distance equal to nominal diameter of conduit, and shall fit tightly over conduit coating to form a watertight joint. Joints and fittings shall be made tight with strap wrenches. All damage to PVC jacket shall be repaired with four separate applications of PVC paint. Finished patch shall be 0.040-inch minimum thickness. Conduit sizes shall be not less than 3/4-inch IPS.

4. Rigid Polyvinyl Chloride (PVC) Conduit
    a. PVC conduit shall be manufactured in accordance with UL 651. PVC conduit shall be Schedule 40 or Schedule 80 high impact polyvinyl chloride, UL listed for direct burial. Minimum size shall be 3/4-inch. Fittings used with PVC conduit shall be PVC solvent weld type.
5. Fittings
    a. Fittings for rigid steel conduit shall be threaded type and shall conform to the requirements of ANSI C80.4. Locknuts shall be extra heavy galvanized steel. Bushings shall be galvanized malleable iron with insulating collars. Grounding bushings shall be locking type and shall be provided with feed-through compression lugs.
6. Locknuts shall be extra heavy electro-galvanized steel for sizes through 2-inches. Locknuts larger than 2-inches shall be electro-galvanized malleable iron. Furnish allied tube and conduit type GRC, Triangle PWC, Inc., type GRS or approved equal.

2.03 SUPPORTS

A. General Requirements
    1. Inserts, hangers, brackets and miscellaneous supports for electrical equipment and conduits must be designed with minimum safety factor of four (4), based on ultimate strength of material used. For empty conduits, include weight of 4 Type XHHW copper wires of maximum permissible size.
    2. Secure hangers, brackets, conduit straps, supports and electrical equipment by means of toggle bolts on hollow masonry; expansion shields and machine screws or standard preset inserts on concrete or solid masonry; machine screws or bolts on metal surfaces; wood screws on wood construction. Wood or fiber plugs or concrete nails, are not acceptable.
    3. All channels, fittings, clamps and accessories shall be hot dipped galvanized after fabrication for outdoor installations, and electro-galvanized for dry indoor installations. In wet or corrosive areas, such as well casings and sumps, all channels, fittings, clamps and accessories shall be Type 316 stainless steel.

B. Support channels steel shall conform to the requirements of ASTM A570. These shall be nominal 1-5/8"x1-5/8" roll formed low carbon 12-gauge steel. One side of the channel shall have a continuous slot with turned in lips. Double strut shall be two of these welded back to back. Support channels shall be filled with Styrofoam to inhibit concrete seepage.

C. Conduit Supports:
    1. Single Conduit Hangers - Steel City #C-149, Elcen Figure 13, Unistrut #JI205 through

J1260, or approved equal, with 3/8" minimum diameter steel rod.

2. Trapeze Hangers - Steel City #B-900, Elcen Figure 600, Unistrut #P-1000, or approved equal, channel with 3/8" minimum diameter steel rods and with conduit clamps, as specified below.
3. Trapeze Conduit Clamps - Steel City #C-105, Elcen Figure 650, Unistrut #P-J111 through P-1124, or approved equal, for rigid conduit.
4. Riser Supports - Steel City #C-210, Elcen Figure 39, Unistrut #U991-7 through U991-60, or approved equal.
5. Finish
    a. Hangers, channels, clamps, supports and rods, galvanized, cadmium plated or standard factory paint finish
    b. Conduit straps and single hole clamps, galvanized or cadmium plated
    c. Steel bolts, screws, nuts and washers, galvanized or cadmium plated
6. All conduit supports and hardware mounted inside the wet well shall be Type 316 stainless steel.

2.04 DUCT AND CONDUIT CAULKING COMPOUND

A. Compounds for sealing ducts and conduit shall have a putty-like consistency workable with the hands at temperatures as low as 35°F and shall not slump at a temperature of 300°F or harden materially when exposed to the air. Compounds shall readily calk or adhere to lean surfaces of asbestos cement, fiber, or plastic duct; metallic conduits or conduit coatings; concrete masonry, or lead; any cable sheaths, jackets, covers, or insulation materials; and the common metals. Compounds shall form a seal without dissolving, noticeable changing characteristics, or removing any of the ingredients. Compounds shall have no injurious effect upon the hands of workmen or upon materials. Contractor shall apply duct seal to all conduits entering the wet well or as directed by the Engineer.

2.05 BOXES AND CONDULET

A. Boxes and Condulet shall be cast ferrous steel Form 7 with gasketed weatherproof covers and Type 316 stainless steel hardware for all indoor and outdoor applications. NEMA 4X boxes shall be cast nonmetallic screw hub type with gasketed watertight covers and Type 316 stainless steel hardware. Each box shall be large enough to accommodate the required number and sizes of conduits, conductors, splices and devices per the NEC. Flush boxes shall have the front edge of box or ring flush with wall or ceiling finish.

2.06 WIREWAY

A. Surface metal raceway shall be constructed in accordance with Underwriters' Laboratories Standards UL 870 for Wireways, Auxiliary Gutters and Associated Fittings. Every component including lengths, connectors and fittings shall be UL listed.

B. Surface metal raceway shall be suitable for "lay-in" of conductors.

C. All sheet metal parts shall be provided with a rust inhibiting phosphatizing coating and gray

baked enamel finish. All hardware shall be plated to prevent corrosion. All screws installed toward the inside shall be protected by spring nuts or otherwise guarded to prevent wire insulation damage.

PART 3 - EXECUTION

3.01 GENERAL REQUIREMENTS

A. General Requirements

1. Install an accessible raceway system for connection of all boxes, panel boards, cabinets, and equipment.
2. All raceway shall be the type and size as shown on the Plans.
3. Make bends for exposed conduit stub-ups completely below the surface. Make stubs vertical and arrange neatly.
4. Where conduits turn up in accessible floor areas or under removable partitions, install coupling flush with finish floor surface (exclusive of floor covering). Provide flush threaded plug in this coupling where conduit is not to be extended.
5. Spare Conduits
    a. For flush mounted panels, run empty conduits from panel to accessible spaces above and below, unless otherwise shown. Install minimum of two 3/4-inch conduits (one up and one down) for every 3 single pole spare circuit breakers or spaces, or fraction thereof.
6. Running Threads
    a. Running threads shall not be acceptable.
7. All bends and offsets, where required, shall either be made with factory made bends or shall be field bends made with a conduit bender designed specifically for use with the type of conduit to be bent.
8. Minimum size of conduit shall be 3/4-inch. In no case shall the conduit size be smaller than that shown on the drawings.
9. The entire electrical raceway system shall be bonded and form a continuous metallic electrical conductor from service point to every box and shall be terminated with ground bushings connected to the panelboard ground bus per NEC.
10. All conduits which are installed shall be capped during construction to prevent the entrance of foreign material.
11. All conduit installed by the Contractor shall be of the type listed in the Conduit Installation Table, at end of this Section.
12. The maximum number of conduit bends shall be as follows: 90-degrees of conduit bends for up to 300-feet of conduit, 180-degrees of conduit bends for up to 200-feet of conduit, 270-degrees of conduit bends for up to 100-feet of conduit, 360-degrees of conduit bends for 50-feet of conduit or less.
13. Conduit terminating at floors or in cabinets, cubicles, and walls shall be identified by metal tags bearing the conduit number. The tags shall be securely attached to the

conduit directly under the terminating bushing on both ends of the conduit.

B. Exposed Conduit

1. All exposed conduits shall be run in straight lines parallel to column lines, walls or beams. Where conduits are grouped, the bends and fittings shall be installed so as to present an orderly appearance. Unnecessary bending or offsets shall not be acceptable. Conduits shall be kept at least 12-inches away from heating devices or similar equipment.
2. Supports for exposed conduit shall be in accordance with Title 24, CAC.
3. Supports and all hardware inside well casing, tanks, etc. area shall be stainless steel.
4. Support conduits as close to 8-foot intervals as possible and within 1-foot of boxes or changes in direction. Use riser supports with clamps for vertical conduit risers.
5. For single conduit runs, use conduit straps with backplates or suspend from ceiling with single conduit hangers. Single hole malleable iron clamps may be used for horizontal runs on vertical surfaces. Perforated strap (plumber's tape), not acceptable.
6. For multiple conduit runs, group conduits together and support from ceiling by means of trapeze hangers. Wall brackets may be used for conduit runs on vertical surfaces. Clamp each conduit to trapeze or bracket, using conduit clamp.
7. Fasten hanger rods to structural steel members with beam clamps or to concrete inserts set flush with surface. Install reinforcing rod through opening in concrete insert.
8. Exposed conduit shall be tightened securely and shall be supported rigidly in place, and all connections to outdoor boxes shall be watertight. All exposed conduit shall include, where required, the drilling of holes in the bottom and top of enclosures or plates and in the sides of enclosures of switchgear and other electrical equipment. The Contractor shall drill all holes in concrete for installation of expansion anchors for exposed conduit runs.

C. Conduits in Concrete Slabs

1. Conduits in concrete slabs shall be rigid galvanized steel and may be installed in structural slabs, or in slabs on fill, having a minimum thickness of 4-inches of concrete around the entire conduit.
2. Conduits will not be permitted to interfere with proper placement of principal reinforcement steel and must be located as directed. In structural slabs, place conduits carefully between upper and lower layers of steel. In prestressed concrete slab construction, place conduits in center of slab and do not support from prestressed steel.
3. Space conduits 8-inches minimum on centers, except place as wide as possible where they converge at panels or junction boxes.
4. Place conduits running parallel to slab supports (beams, columns, walls, etc.) not less than 12-inches from such supports.

D. Underground Conduits

1. Buried Conduit
    a. Buried conduits shall be a minimum of 24-inches below grade on runs not exposed to vehicular traffic and a minimum of 36-inches below grade when exposed to vehicular traffic. Buried conduits shall be installed per the Conduit

Installation Table, Paragraph 3.02.C, “Outlet, Device, Pull, and Junction Boxes”. Backfill shall be compacted to ninety-five percent (95%). Paved surfaces disturbed during trenching shall be repaired to pre-construction condition after installation is complete.

b. All conduits entering or leaving the ground shall be sealed to prevent condensation of moisture inside the conduit. Conduit entrances in the bottom of switchgear, power distribution panels, switchboards, etc., shall project into the enclosure a minimum of three inches to prevent water from entering conduits.

c. Concrete shall be Class D PCC in accordance with Section 10-5 of the City of Sacramento Standard Specifications and shall have a compressive strength of 3000-PSI. A red oxide in the amount of 5-lbs per cubic yard shall be mixed uniformly throughout the concrete.

d. Contractor to place a 6-inch wide electrical caution warning tape in trench 12-inches above concrete as directed by the Engineer.

2. Duct Lines

a. Duct lines shall have a continuous slope downward toward pull boxes and away from switchgear with a pitch not less than 4-inches in 100-feet. Install end bells at duct terminations in handholes. Except at conduit risers, changes in direction or more than 5-degrees, either vertical or horizontal, shall be accomplished by long sweep bends having a minimum radius of curvature of 25-feet, sweep bends may be made up of one or more manufacturer's 30-degree curved sections and straight sections. Manufactured risers shall have a minimum radius of 18-inches. The joints of the conduits shall be staggered by rows and layers so as to provide a duct line having the maximum strength. All duct runs shall be placed on an undisturbed excavated soil base wherever possible. Where duct runs pass through backfilled areas, the soil base shall be compacted to ninety-five percent (95%).

b. Duct joints shall be made by brushing a plastic solvent cement on insides of plastic coupling fittings and the outside of duct ends. Each duct and fitting shall then be slipped together with a quick one-quarter turn twist and held in to set the joint tightly.

c. Plastic spacers as manufactured by the conduit supplier shall be used and shall be located 5-feet on centers. These spacers shall provide for conduit separation by a minimum of 2-inches between and 4-inches on the top, bottom and sides. Wire ties shall be made at each spacer location and shall be securely anchored to prevent conduit flotation during pouring. Duct runs shall be watertight.

d. All ducts shall be inspected by the Engineer prior to pouring concrete. He shall inspect for backfill compaction, drainage slope, spacers, flotation ties and conduit condition, joints, and end bells. Concrete shall not be poured until this inspection is complete.

e. Conduits shall be thoroughly swabbed immediately upon completion of pouring.

f. After the concrete has set, but before backfilling, a mandrel having a diameter the nominal conduit inside diameter, minus 1/4-inch, and not less than 8-inches long, shall be pulled through each conduit. The mandrel shall be lead covered or painted white to give indication of any protrusion on the inside of the conduit, which might injure the cable sheath. The ends of all conduits shall be suitably

plugged, capped and protected from damage during construction.

g. Ducts shall be stored to avoid warping and deterioration with ends plugged to prevent entry of any water or solid substances. Ducts shall be thoroughly cleaned before being laid. Plastic ducts shall be stored on a flat surface and protected from the direct rays of the sun.

h. Concrete shall be Class D PCC in accordance with Section 10-5 of the City of Sacramento Standard Specifications and shall have a compressive strength of 3000-PSI. A red oxide in the amount of 5-lbs per cubic yard shall be mixed uniformly throughout the concrete.

i. Contractor to place a 6-inch wide electrical caution warning tape in trench 12-inches above concrete as directed by the Engineer.

3. Conduit in Structural Concrete

a. Runs of conduit to be embedded in concrete shall be rigidly supported in their proper positions while concrete is being placed. Ends of conduits shall be suitable plugged or capped during construction to prevent the entrance of concrete or other foreign matter. Connections shall be checked for tightness before being embedded.

4. Vertical Penetration of Grade

a. All risers penetrating ground shall extend 6-inches above grade.

b. Conduit entrances in the bottom of switchgear, power distribution panels, switchboards, etc., shall project into the enclosure a minimum of three inches to prevent water from entering conduits.

5. Conduits Crossing Expansion and/or Contraction Joints

a. Expansion couplings used in conduit runs crossing expansion or contraction joints in concrete shall be zinc coated and watertight.

E. Workmanship and Installation Requirements

1. Where field changes are required, every precaution shall be taken to insure that the change is coordinated with other conduit, structural, and plumbing and piping work. Information shall be obtained regarding the completed raceway runs to insure that there will be no interference when the raceway run is extended or revised. A complete record of such changes shall be made on the Drawings.

2. Conduits shall be cut square, threaded and reamed to remove sharp or rough edges and burrs. No running threads will be allowed. Conduit joints and connections shall be made waterproof and rustproof by application of a non-insulating thread compound, such as white lead or graphite, and zinc sealing material. Each threaded joint shall be thoroughly cleaned to remove cutting oil before the compound is applied.

3. Metallic conduits shall be bent cold to prevent damage to the protective coating. All bending shall be gradual and be done smoothly to permit the pulling on insulated electrical wires and cables without incurring damage to the insulation or sheath. Radius of curvature shall be not less than that permitted by NEC. The number of bends shall not exceed four (4) 90-degree bends between pull points.

4. Conduit shall be rigidly secured to panels and other electrical equipment terminal boxes with locknuts and grounding bushings in such a manner that each system shall be

electrically continuous throughout unless otherwise shown on the Drawings.

5. The raceway system shall be installed complete before conductors are installed. Concrete shall be removed from the inside of pull boxes after the forms are removed, and the threads for attaching devices and covers shall be cleaned. As soon as practicable after conduits are installed, conduits shall be swabbed with clean dry rags to show they are clean and dry.
6. To reduce damage to the zinc coating, only strap type wrenches shall be used. All places where the zinc coating is damaged shall be repaired with zinc-rich galvanizing repair compound.
7. Pull boxes, sized in accordance with NEC, shall be installed wherever necessary to avoid overly long straight runs or an excessive number of bends.
8. Raceway shall be installed with necessary fittings and supports.
9. Pull-tape shall be a made out of woven aramid yarns and contain a silicon lubricate. The pull-tape shall have sequential footage markings and have a minimum tensile strength of 2500-lbs. Furnish and install pull-tape in all empty raceways, unless otherwise noted. Pull-tape shall be Dandy-Line or approved equal.
10. All underground conduits shall be inspected by the Engineer before backfilling the trench.

3.02 OUTLET, DEVICE, PULL, AND JUNCTION BOXES

A. Boxes shall be installed as follows:
   1. NEMA 3R for indoor and outdoor areas
   2. NEMA 4X where specifically shown on the plans and corrosive areas

B. Set boxes in a rigid manner and support independently of conduit by bar hangers in metal studs, or to solid blocking in frame construction, or fasten directly with wood screws on solid wood framing, bolts and expansion shields on concrete or brick, toggle bolts on hollow masonry units, and machine screws or welded threaded studs on steel work. Do not use powder actuated fasteners on this job. All junction boxes shall be installed with covers accessible after installation.

C. Pull boxes shall be located every 400-feet for straight pulls, 300-feet with every 90-degrees of conduit bends, 200-feet with 180-degrees of conduit bends, 100-feet with 270-degrees of conduit bends and every 50-feet with 360-degrees of conduit bends.

Conduit Installation Table	
Installation	**Conduit Type**
Exposed Conduit (indoor & outdoor)	Rigid galvanized steel conduit
Conduit in Concrete Slab	Rigid galvanized steel conduit
Underground Conduit	Rigid galvanized steel PVC coated conduit where the conduit is directly in contact with the earth or schedule 40 PVC conduit with concrete encasement minimum of 4-inches all around for horizontal runs only.

Conduit in Duct Bank	Schedule 40 PVC conduit with concrete encasement minimum of 4-inches all around for horizontal runs only
Vertical or horizontal sweeps, risers, or stubs into underground boxes	Rigid galvanized steel PVC coated conduit for entire sweep, underground runs 5' prior to riser or stub, and 6-inches above finished grade. Conduit 6-inches above finished grade shall be installed as exposed conduit.
Bottom Entrance of Switchgear, Distribution Panel, MCC, & etc	Rigid galvanized steel PVC coated conduit
Side or Top Entrance of Switchgear, Distribution Panel, MCC, & etc	Rigid galvanized steel conduit
Conduit exposed to corrosive environment (sewer wet well)	Type 316 stainless steel conduit
Primary & Secondary of the SMUD Transformer	Per SMUD standard specifications
Bottom entrance from SMUD transformer to City main switchgear	PVC conduit with concrete encasement minimum of 4-inches all around
Motor Conduit Box to Rigid Wireway System	Flexible liquid tight metal conduit
Door Switch Sensor to Rigid Wireway System	Flexible liquid tight metal conduit
Conduit From Junction Box to Outside Building Lights	Rigid galvanized steel conduit
Conduit From Junction Box to Trash Rack Lights	Flexible liquid tight metal conduit
Risers or Conduit Stubs Rising Up From Concrete Duct Bank	Rigid galvanized steel PVC coated conduit
Equipment Subject to Vibration	Flexible liquid tight metal conduit
Conduit from Wellhead Junction Box to Wellhead	Rigid galvanized steel conduit with two unions

Notes:

1. All acceptable conduit materials are specified in Section 16110, “Raceway Systems”, Paragraph 2.02.A, “Conduit and Conduit Fittings”.
2. Any conduit not covered in the above categories shall be Rigid Galvanized Steel PVC coated.
3. All underground PVC conduits shall be encased in red concrete.
4. Contractor shall place a 6-inch wide electrical caution warning tape in all trenches 12-inches above concrete or as directed by the Engineer.

**** End of Section ****

SECTION 16120

LOW VOLTAGE WIRE AND CABLE

PART 1 - GENERAL

1.01 SCOPE

A. This Section covers the furnishing, installing and testing of all wire and cable required to complete the installation of equipment as specified herein and as shown.

B. The provisions of Section 16010, “Electrical Work”, of these specifications shall apply, unless otherwise specified in this Section.

1.02 SUBMITTALS

A. Descriptive literature for all materials furnished under this Section shall be submitted in accordance with Section 01330, “Submittals”, of these specifications.

B. Submittals for the wire and Cable shall include, but shall not be limited to, the following:

1. Submittals will include product data sheets for all cables, of each type and voltage rating, on which work is to be performed under this contract.
2. Certified test reports prepared by manufacturer.

1.03 QUALITY ASSURANCE

A. Wire and cable of the type and voltage rating shown on the contract drawings shall be of a design which has been in satisfactory use for not less than three (3) years in a minimum of twenty (20) installations. For purposes similar to those intended herein.

B. Manufacturer shall provide certification that the manufacturer has been fabricating and assembling specified equipment (as described in A above) in his current facility for a minimum of five (5) years.

C. All materials selected for the manufacture of the hardware shall be the best available for the purpose for which they are used, considering strength, ductility, durability and the best engineering practice.

D. All cable has been manufactured within one year of installation.

1.04 DELIVERY, STORAGE AND HANDLING

A. Wire and cable shall be delivered complete, in manufacturer's original, unopened protective packaging. Packing materials shall be such as to prevent damage to the materials during transportation and handling.

B. Wire and cable shall be handled in a manner to prevent damage to the coverings and conductor.

C. Maintain protective coverings until ready for installation.

PART 2 - PRODUCTS

2.01 REFERENCE STANDARDS

A. The publications referred to hereinafter form a part of this specification to the extent referenced. The publications are referred to in the text by the basic designation only. Unless otherwise indicated, the latest edition of referenced publications in effect at the time of the bid shall govern. In case of conflict between the requirements of this Section and those of the listed documents, the requirements of this Section shall prevail. Wire and cable supplied under this contract shall be designed, manufactured, and tested in accordance with the latest version of the following standards:

American Society for Testing and Materials (ASTM)	
ASTM B8	Concentric-Lay-Stranded Copper Conductors

Insulated Cable Engineers Association (ICEA)	
S-68-516	Ethylene Propylene Rubber Insulation

Underwriters Laboratory (UL)	
UL 20	General Use Snap Switches
UL 486A	Wire Connectors and Soldering Lugs
UL 83	Thermoplastic Insulated Wires
UL 510	Insulating Tape
UL 1072	Medium Voltage Cable

National Electrical Manufacturers Association (NEMA)	
WD-1	General Purpose Wiring Devices

1. National Electrical Code (NEC)
2. Institute of Electrical and Electronic Engineers (IEEE)
3. California Administrative Code (CAC) Title 24

2.02 LOW VOLTAGE WIRING

A. Low voltage wiring shall be of the size and number shown and shall have the following characteristics. Sizes are indicated by American Wire Gauge (AWG) and minimum size shall be No. 12 AWG for power wiring and No. 14 AWG for control wiring, unless otherwise indicated.

B. Voltage - 600-V.

C. Conductors - Annealed copper 98% conductivity. Aluminum conductors are not acceptable.

D. Conductor Stranding - All Conductors shall be stranded. Solid wire is not acceptable.

E. Insulation

1. Thermoplastic insulated wires and cables shall be listed in UL 83. They shall be delivered to the job site in the manufacturer's unopened boxes or reels. Insulation for conductors and cables shall be rated 600-Volts and shall be as follows:

Item	Sizes	Insulation
Branch	No. 12 to No. 10	THHN/THWN-2
Grounding	All	TW or bare
Feeders	No. 6 and larger	THHN/THWN-2
Cords	No. 12	SO
Wet Locations	All	THWN
Corrosive Locations	All	THHN/THWN-2

F. Insulation Colors

1. Insulation shall be continuously colored for the entire conductor length; except that feeders can be phased taped and all insulated grounding conductors must be green.

G. Instrumentation/Telemetry Cable

1. Instrumentation and Telemetry Cable shall be multiple-pair, #16 AWG, twisted, overall shielded with PVC jacket. Shield shall be 100% and include #20 AWG stranded, tinned copper drain wire. The conductors shall be polyethylene insulated. Manufacturer shall be Belden or approved equal.

H. RS-485 Application

1. Tinned copper, polyethylene insulated, twisted pair. Overall aluminum-polyester shield. 24 AWG stranded tinned copper drain wire. Overall tinned copper braid shield. Chrome PVC jacket. The cable shall be Belden 9842, or approved equal.

I. Ethernet Application

1. Approved shielded CAT-5E or CAT-6 cable. Segment of Ethernet shall not exceed 90-meters under any circumstances.

2.03 COLOR CODE

A. Color code for three phase circuits shall be ph-A, ph-B, ph-C front to back, left to right and top to bottom. Color code for three phase circuits are listed in phase order. Color code shall be as follows:

120/240 Volt Power Wiring	
Phase A	Black
Phase B	Red
Phase C	Blue
Neutral	White

480/277 Volt Power Wiring	
Phase A	Brown
Phase B	Orange
Phase C	Yellow
Neutral	White

Ground	Green

Miscellaneous	
Control Wiring	Purple
DC + Wiring	Blue
DC - Wiring	Gray

Signal Wiring	
Positive (+)	Red
Negative (-)	Black

Ground	Green

120 Volt Control Wiring	
Line	Red
Neutral	White
Ground	Green

2.04 GROUND CONDUCTOR

A. Grounding electrode conductors shall be sized per NEC 2008 edition, table 250.66, unless otherwise noted on the Plans.

B. Raceway and equipment grounding conductors shall be sized per NEC 2008 edition, table 250.122, unless otherwise noted on the Plans.

2.05 GROUND RODS

A. Provide copper-encased steel ground rods at least 3/4-inch in diameter and 10-feet long unless otherwise indicated. Die-stamp each near the top with the name or trademark of the manufacturer and the length of the rod in feet. The rods shall have a hard, clean, smooth, continuous surface throughout the length of the rod. Ground rods shall be provided with precast ground wells.

2.06 WIRING MATERIALS

A. Compression Connectors

1. Connectors shall be for use with copper conductors and shall conform to the requirements of UL 486A. Control and signal connectors shall be copper compression type nylon self-insulated grip locking spade lugs. Power and grounding lugs and connectors for conductors No. 6 and larger shall be compression types of one piece tubular construction. These power compression connectors shall be copper long barrel terminals with corrosion resistant tin plating. Connectors shall be marked externally with wire size and type. Power connectors shall have NEMA configuration bolt holes on the pad. Connectors shall also have the proper mating compression die index and color code marked on the barrel. Furnish ILSCO #CRA/B-L series or approved equal.

B. Splice Waterproofing Kits

1. Splice waterproofing shall be in kit form. Kit shall contain low viscosity polyurethane sealing and insulating material. The component materials of the insulation shall be in exact mixing ratio packages. Kit shall employ a gravity poured method of a pressure injected method. Molds shall be flexible plastic with porous webbing. Molds shall be

capable of accommodating odd shape splices. Kit shall be rated 600V and water submersible. Furnish 3M Scotch cast 2104 and 85 series, or approved equal.

C. Electrical Tapes

1. Tapes shall conform to the requirements of UL 510 and be rated: 105°C, 600-V, flame retardant, hot and cold weather resistant. Vinyl plastic electrical tape shall be 7-mil black. Phase tape shall be 7-mil vinyl plastic, color code as specified. Electrical insulation putty shall be rubber based, elastic putty in tape form. Varnished cambric shall be 9-mil cotton tape impregnated with yellow insulating varnish and adhesive backed.

D. Wire and Cable Markers

1. Every control and signal conductor shall be tagged with a permanently machine imprinted plastic nylon clip sleeve heat shrinkable or adhesive backed strip type labels protected with a clear plastic heat shrinkable tubing.

PART 3 - EXECUTION

3.01 GENERAL REQUIREMENTS

A. Wire and cable shall not be installed in conduit until the raceway system has been completed and cleaned. The equipment and methods for the installation of wire and cable shall insure that no cuts or abrasions in the insulation or protective covering or kinks in the conductors occur. Cables shall be pulled down grade with the feed in point at point of the highest elevation.

B. The Contractor shall pull wire and cable into the conduit with sufficient length remaining at the ends to conveniently make connections to all equipment or devices.

C. Where practicable, the minimum radius to which an insulated conductor shall be bent, whether permanently or temporarily during installation, shall be ten times the diameter over the outer covering for rubber and thermoplastic insulated cable.

D. Where a lubricant is needed as an aid in pulling wire or cable, a non-conducting lubricant or cable-pulling compound approved by the wire and cable manufacturer and that is not injurious to the sheath or insulation shall be used. The 600-V cable lubricants shall be soapstone, graphite or talc which shall be UL listed for thermoplastic insulation. Oil or grease shall not be used for lubrication. Excessive pulling stresses will not be permitted.

E. Wire and cable shall be continuous, with no splices permitted except in enclosed steel boxes provided for the purpose, or in manholes. Shipping length of power cable shall be equal to a circuit length or summation of various circuit lengths to minimize cable waste.

3.02 INSTALLATION - LOW VOLTAGE WIRING

A. General Requirements

1. Do not use blocks, tackle, or other mechanical means to pull in wires #8 AWG, or smaller. Cable pulling tensions shall not exceed the maximum pulling tension for stranded copper.

2. See Section 16110, “Raceway Systems”, for pull rope/tape requirements.

3. Unless otherwise specified or shown, leave at least 9-inches of free conductor length at each unconnected outlet. The free ends of conductors shall be coiled neatly in outlet box.

B. Splicing and Termination of Conductors

1. Conductors #10 AWG and smaller

   a. Twist conductors together to be electrically and mechanically secure.

   b. Insulate splices, joints and free ends of conductors with insulation equivalent to that of conductors by taping with varnish-cambridge rubber tapes, or with high dielectric strength plastic tape.

2. Conductors #8 AWG and larger

   a. Splice and terminate conductors by use of connectors and terminal lug.

   b. To not use split bolt type connectors.

   c. After initial set has been taken, re-tighten all pressure type connectors and lugs.

   d. Insulate all splices, joints, and free ends of conductors as specified above.

   e. Where aluminum lug is bolted with steel or copper bolt, use Belleville spring washer and flat washer. Belleville washer, either hardened and tempered steel, tin plated, or stainless steel. Flat washer, mild steel, tin plated, and slightly larger than Belleville washer.

3. Low Voltage Control Wiring

   a. Splice by twisting conductors together so as to be electrically and mechanically secure. Other methods may be used if specifically approved by Engineer.

4. Underground Splices

   a. Conductor and cable splices installed underground in manholes, pullholes and similar locations, shall be made watertight. Install waterproofing after insulating with tape on all splices in junction boxes or handholes. Follow manufacturer's written instructions. As a minimum molds shall be fitted uniformly webbed around the spliced conductors. Insulating and waterproofing material shall then be poured or injected into the mold. Do not allow cables to move until after material has cured one (1) hour at 70°F or eight (8) hours below 70°F.

C. Marking:

1. In addition to color coding, identify circuits as follows:

   a. The Contractor shall assign to each wire or cable a unique identification number unless a number has been pre-assigned on the Plans.

   b. Where an identification number has been pre-assigned on the Plans the Contractor shall use that number.

   c. The same identification number shall be used for conductors having common terminals.

   d. Identification numbers shall be shown on all as-built drawings.

   e. Identification numbers shall be located within 3-inches of wire terminations and shall not be located such that they are concealed in any raceway.

2. Each multi-conductor cable shall be assigned a unique identification number. It is required that this cable number shall form part of the individual wire identification number for each conductor in the cable. Cable markers shall be attached to each cable at stub-up locations and at all intermediate pull box locations.

3.03 GROUNDING

A. Permanently and effectively ground noncurrent metal parts of conduit systems, supports, cabinets, switchboards, equipment cases, motor frames, etc., and system neutral conductors per NEC. Install metal raceway couplings, fittings and terminations secure and tight to insure good ground continuity. Provide grounding bushing and bonding jumper where conduits enter any panel or device, panels with open bottom or where shown on the drawings. Install a ground conductor in each raceway system. Contractor to install Ufer ground per NEC Section 250.

B. Grounding details shown on plans are minimum. If additional equipment, such as ground rods, clamps, conductors, etc., is required, furnish and install same without additional cost to City.

C. Use ground clamps specifically designed for grounding purposes. Where ground conductor is in conduit, use ground clamp which grounds both conductor and conduit.

D. Shielded instrumentation cable shall be grounded at one end of circuit only unless explicitly required by manufacturer of instrument or device to be grounded at multiple locations. Single ground point in each circuit shall be at the receiving end of the signal carried by the cable.

3.04 PREPARATION FOR OPERATION

A. The wire and cable shall be properly installed, connected and tested by the Contractor before such equipment will be taken over for operational service.

B. Identification markers and nameplates shall be properly and accurately installed.

C. Torqueing

1. Every worker assigned to tightening bolted connections on this job shall be required to have either a torque screwdriver or a torque wrench on site in their tool box. Each crew shall have one of each. All electrical, mechanical and structural threaded connections shall be torqued. Torque connections to the value recommended by the equipment manufacturer. If they are not available, see Section 16950, “Operational Testing”, for torque requirements.

3.05 TESTS AND INSPECTIONS

A. Insulated wire and Cable Dielectric Tests

1. After the wiring is installed and all taps and splices are completed, but before making connections to equipment terminals, the cable shall be given insulation tests in accordance with Section 16950, “Operational Testing”, and NEMA and ICEA Standards.

B. Continuity Tests:

1. After wiring connections to equipment and devices have been made, the circuits shall be tested for continuity. The Contractor shall be responsible for notifying the City Resident Inspector when the wire or cable is ready to be tested, and the Contractor

shall conduct the tests as instructed by the Engineer.

2. If a failure is detected, the Contractor shall locate and determine the trouble, make necessary corrections to the installation and retest without additional cost to the City.
3. Connection of the wiring to equipment or device terminal blocks or other connection points and furnishing and installing conductor identification tags at terminals or other connections shall be included as part of the equipment's installation.

C. All testing required to ensure the satisfactory installation, adjustment, operation, and performance of all equipment and materials installed under this specification shall be the responsibility of the Contractor.

D. The Contractor shall also responsible for furnishing all electrical test equipment, meters, instruments and miscellaneous equipment and perform all work required for the tests.

E. The Contractor shall furnish the Engineer three (3) copies of certified test reports showing the results of all tests specified herein.

3.06 DEMONSTRATION OF COMPLETE ELECTRICAL SYSTEMS

A. Demonstration of the operation of segments of systems shall not be construed as acceptability of the complete system. Acceptance will only be made on satisfactory demonstration of the complete operation of the system as a whole.

B. If, in the opinion of the Engineer, test results show improper adjustment, operation, or performance of any equipment, and these deficiencies are due to negligence or unsatisfactory installation by the Contractor, the Contractor shall remedy the situation at no additional cost to the city.

**** End of Section ****

SECTION 16432

LOW VOLTAGE COMMERCIAL SAFETY SOCKET

PART 1 - GENERAL

1.01 SCOPE

A. This Section covers the commercial safety socket and includes coordinating the new electrical hookup with SMUD. The City will provide the commercial safety socket for each well.

B. The provisions of Section 16010, “Electrical Work”, and Section 16120, “Low Voltage Wire and Cable”, of these specifications shall apply unless otherwise specified in this Section.

1.02 ELECTRIC SERVICE COORDINATION

A. The existing electrical services are provided by SMUD and are 480-VAC either 3 or 4-wire systems. SMUD will change out any transformer(s) that are 480-VAC and 3-wire to a 4-wire system.

B. The Contractor shall coordinate the electric service hookup with SMUD such that the service is available to match the project schedule (Sacramento Utility District Service Number is (916) 732-7074). The SMUD Service Notification numbers are to be provided at a later date.

C. The Contractor shall furnish and install the underground conduits, conductors, risers, and pull boxes as shown on the Plans and in accordance with SMUD requirements. SMUD will make all connections at the transformer.

D. The Contractor shall make sure that the electrical service phase rotation matches SMUD.

PART 2 - PRODUCTS

Not Used.

PART 3 - EXECUTION

3.01 INSTALLATION AND TESTS

A. Facilities for SMUD service shall be inspected and approved prior to acceptance of the Contractor’s work.

B. Contractor shall furnish all material and labor including, but not limited to, transportation, loading, lifting, jacking, wiring to completely install the main switchboard as shown on the drawings and shall conform to the latest edition of the National Electric Code (NEC).

C. Refer to Section 16950, “Operational Testing”, for all the testing requirements.

D. The contractor shall be responsible for picking up the MCC, meter, and generator receptacle and delivering these items to each job site

**** End of Section ****

SECTION 16480

LOW VOLTAGE MOTOR CONTROL CENTER

PART 1 - GENERAL

1.01 SCOPE

A. This Section covers the installing and testing of the Motor Control Center as specified herein, as shown on the Drawings, and as required for a complete electrical installation.

B. The provisions of Section 16010, “Electrical Work”, and Section 16120, “Low Voltage Wire and Cable”, of these specifications shall apply unless otherwise specified in this Section.

PART 2 - PRODUCTS

2.01 MATERIAL AND EQUIPMENT

A. The City has purchased the motor control centers (MCCs) and meters through a separate procurement contract. The Contractor shall install this equipment at the respective sites as indicated on the plan sheets. The City has purchased MCCs with different size motor starters for each well pump. The motor starter sizes are 40-HP, 50-HP, 75-HP, 100-HP, or 150-HP.

   The MCCs are rated NEMA 3R.

B. The motor starter size will be determined after pump testing and the appropriate MCC shall be installed to match the pump size.

PART 3 - EXECUTION

3.01 INSTALLATION

A. Contractor shall furnish all material and labor including, but not limited to, transportation, loading, lifting, jacking, wiring to completely install Motor Control Center as shown on the drawings and shall conform to the National Electrical Code (NEC). The Contractor shall transport each MCC from the electrical distributor facility to each job site. The electrical distributor is CED in Rancho Cordova, CA.

**** End of Section ****

SECTION 16530

LIGHTING

PART 1 - GENERAL

1.01 SCOPE

A. This Section covers the furnishing, and installing of lighting fixtures, wiring devices, poles, conduit, wiring and other material for the complete indoor and outdoor lighting as shown on the drawings. Lighting fixtures and hardware shall be installed as shown on the Plans.

1.02 SUBMITTALS

A. Catalog cuts showing manufacturer, catalog numbers, dimensions, weights and material for fixtures and poles shall be submitted to the Engineer for review in accordance with Section 01330, “Submittals”.

PART 2 - PRODUCTS

2.01 REFERENCE STANDARDS

A. Materials and equipment supplied under this contact shall be designed, manufactured, and tested in accordance with the latest version of the following standard:

1. National Electrical Manufactures Association (NEMA)
2. Underwriters Laboratories, Inc.
3. National Electrical Code

2.02 LIGHTING FIXTURES, DEVICES, AND POLES

A. Lighting Fixtures shall be complete with mounting brackets and hardware, lamps, lenses, fixtures wire, and all required accessories as specified and as required by NEC. The lighting fixtures and fixture accessories shall be as shown on the drawings, or approved equal.

B. Lighting fixtures shall be of the LED type.

C. Light Poles shall be anchor base, round, tapered steel, hot dipped galvanized, height as indicated, complete with handhole and gasketed cover, anchor bolts with leveling and locking screws and cover, and grounding connection.

D. Light Switches: Switches shall be single pole, specification grade, 277-Volt, 3 wire, 20-Ampere A.C., ivory in color with stainless steel cover plates. Furnish Hubbell 1221, Leviton 1201-2, or approved equal. Outdoor light switches shall be weatherproof. **Light switches shall be labeled with nameplates per Section 16010, “Electrical Work”.**

E. GFCI Receptacles shall be ivory, 20A, NEMA 5-20R furnished with stainless steel plates. Outdoor receptacles shall be weatherproof. Receptacles shall be Leviton #6899, G.E.

#TGTR115, Square D #GFDR120, or approved equal.

F. Motion detectors shall be rated for outdoor use with an input voltage of 120V and an isolated relay contact. Motion detectors shall EW outdoor motion sensor model number EW-100-120 or approved equal.

PART 3 - EXECUTION

3.01 INSTALLATION

A. All lighting poles and fixtures shall be directly grounded to the site grounding system by means of a conductor of a size not less than that required by NEC. If insulated, the ground conductor insulation shall be colored green.

B. The Contractor shall install all lighting fixtures in accordance with the manufacturer's instructions and recommendations.

C. All exterior fixtures shall be aligned and directed as shown on the Plans and as directed by the Engineer in order to illuminate the desired area properly. Fixtures shall be directly and rigidly mounted on Contractor provided supporting structures.

D. Unless otherwise noted on the plans: general use receptacles shall be mounted 18" above the finish floor to device centerline, light switches shall be mounted 48" above finish floor to device centerline.

E. Prior to acceptance by the City the Contractor shall thoroughly clean the fixtures and lamps.

**** End of Section ****

SECTION 16950

OPERATIONAL TESTING

PART 1 - GENERAL

1.01 SCOPE

A. General

1. Independent test company pre-operational testing.
2. Contractor operational testing.

1.02 GENERAL REQUIREMENTS

A. The Contractor shall engage and pay for the services of an approved independent testing company for the purpose of performing inspections and electrical preoperational tests as specified. The testing company shall provide all material, equipment, labor and technical supervision to perform such tests and inspections. The Contractor shall also perform all mechanical preoperational tests as herein specified.

B. These tests shall assure that all equipment is operational within industry and manufacturer's tolerances and is installed in accordance with design plans and specifications. The tests and inspections shall determine the suitability for energization and the suitability for Owner acceptance of the Contractor's work.

1.03 FAILURE TO MEET TEST

A. Contractor shall replace the defective material or equipment and have tests repeated until test proves satisfactory to the Engineer without additional cost to the Owner.

1.04 SUBMITTALS

A. The Contractor shall submit the following tests to the Engineer:

1. Grounding system test.
2. Phase rotation test.
3. MCC device test including MCP and breaker test.
4. Switchboard and MCC device test, generator receptacle test
5. 600-Volt conductor test.
6. Wiring test.

B. Three (3) copies of each test mentioned above shall include the following data and be submitted with the Operation and Maintenance Manual:

1. Summary of project, construction contract numbers
2. Description of equipment tested

3. Description of test
4. Test personnel
5. List of test equipment used and calibration date
6. Test results, date and weather conditions
7. Conclusions and recommendations
8. Appendix, including all test forms

PART 2 - PRODUCTS

2.01 TESTING COMPANY

A. The testing company shall meet federal OSHA criteria for accreditation of testing laboratories, Title 29, Part 1907. Membership in the International Electrical Testing Association constitutes proof of meeting such criteria. The testing shall be performed by Electro Test, Apparatus Unlimited, Power Systems Testing, Hart Testing, or approved equal.

2.02 TESTING

A. California Electrical Safety Orders (ESO) and Occupational Safety and Health Act (OSHA): The Contractor is cautioned that testing and equipment shall comply with ESO and OSHA as to safety, clearances, padlocks and barriers around electrical equipment energized during testing.

PART 3 – EXECUTION

3.01 PREOPERATIONAL TESTING

A. All testing shall conform to International Electrical Testing Association (NETA) Maintenance and Acceptance specifications and shall utilize manufacturer's instruction manuals applicable to each particular apparatus.

B. Upon completion of the test and inspections noted in these specifications, a label shall be attached to all serviced devices. These labels will indicate date serviced and the service company responsible.

3.02 GROUND RESISTANCE PREOPERATIONAL TEST

A. Test the entire ground system for ground resistance value. Perform fall of potential method with ground test instrument. Record weather and soil conditions at the time measurements are made. Make ground resistance measurements in normally dry weather, not less than 48-hours after rainfall. The current reference rod shall be driven at least 100-feet from the ground rock or grid under test, and the measurements shall be made at 10-foot intervals beginning 25-feet from the test electrode and ending 75-feet from it, all in direct line between the ground rod, or center of grid and the current reference electrode.

B. Grounds and grounding systems shall have a resistance to solid earth ground not exceeding 5-ohms.

3.03 PHASE ROTATION PREOPERATIONAL TEST

A. Check connections to all equipment for proper phase relationship. During this test, disconnect all devices which could be damaged by the application of voltage or reversed phase sequence. Three phase equipment shall be tested for the phase sequence "ABC" front to back, left to right and top to bottom.

3.04 MOTOR CIRCUIT PROTECTOR (MCP) AND CIRCUIT BREAKER PREOPERATIONAL TEST

A. All MCPs and circuit breakers shall be checked for proper mounting, conductor size and feeder designation.

B. All MCPs and only breakers 100-Amp and above shall be tested. Time current characteristic tests shall be performed bypassing three hundred percent (300%) rated current through each pole separately. Trip time shall be determined. Instantaneous pickup current shall be determined by run up or pulse method. Clearing times should be within four cycles or less.

C. Contact and Insulation Resistance

   1. Contact resistance shall be measured and be compared to adjacent poles and similar breaker. Deviations of more than fifty percent (50%) shall be rejected. Insulation resistance shall be measured and shall not be less than 50-megohms. All trip times shall fall within NETA table values. Instantaneous pickup current levels should be within twenty percent (20%) of manufacturer's published values.

D. Circuit breakers with adjustable settings shall have all of the settings tested and test results shall be submitted to the engineer. The following settings shall be tested: long time pickup, long time delay, short time pickup, short time delay, and the instantaneous settings.

E. Circuit breakers with ground fault protection shall be performance tested and test results shall be submitted to the engineer. The testing agency shall verify that the ground protection is connected properly per the manufacturer’s recommendations. The testing agency shall test the ground fault pickup and ground delay and submit the test results to the Engineer.

3.05 SWITCHBOARD & MCC PREOPERATIONAL TEST

A. Visual and Mechanical Inspection:

   1. Inspect for physical damage, proper anchorage and grounding.
   2. Compare equipment nameplate data with design plans and starter schedule.
   3. Compare overload heaters with motor full load current for proper size.
   4. Check torque of bolted connections. Torque connections shall be per manufacturer’s recommendation or use the following table if the manufacturer’s data is not available:

Nominal Torque Requirements for Bolted Bonds			
Bolt Size	**Threads Per Inch**	**Torque (In/Lbs)**	**Torque (Ft/Lbs)**
#8	32	18	
	34	20	
#10	24	23	

	32	32	
1/4"	20	80	6
	28	100	8
5/16"	18	140	11
	20	150	12
3/8"	16	250	20
	24	275	22
7/16"	14	400	33
	20	425	35
1/2"	13	550	45
	20	575	47
5/8"	11	920	76
3/4"	10	1,400	116
7/8"	9	1,950	162
1"	8	2,580	215

B. Electrical Tests:

1. Measure insulation resistance of starter phase to phase and phase to ground with the starter contacts closed and the protective device open. Test voltage and minimum acceptable values shall conform to NETA Section 3, "Test Values". Measure insulation resistance of each control circuit with respect to ground.
2. Motor overload units shall be tested by injecting primary current through overload unit and monitoring trip time.
3. Perform control functional tests by initiating control devices to affect proper operation with motor feeder disconnected

C. Generator Breaker, Interlock and Generator Receptacle Tests:

1. The generator breaker, the interlock and the generator receptacles shall be tested to insure proper functionality. The City will provide a portable generator of the appropriate size and connection hardware from its fleet. The Contractor shall demonstrate to the City that the generator breaker, the interlock and the generator receptacles are working properly to run the well loads. The correct power source phase rotation shall be verified (the phase rotation of the City's portable generators are always A-B-C clockwise).

3.06 600-VOLT CONDUCTOR TEST

A. Megger and record insulation resistances of all 600-Volt insulated conductors using a 500-Volt megger for thirty (30) seconds. Make tests with circuits installed in conduit and isolated from source and load. Each conductor shall be meggered conductor to conductor and conductor to ground. These tests shall be made on cable after installation with all splices made up and terminators installed but not connected to the equipment.

3.07 WIRING TEST

A. Verify all wire connections/terminations are per contract drawings or approved changes. Check

for proper termination of all wires.

3.08 OPERATIONAL TESTING

A. After preoperational tests are complete, the Contractor shall conduct overall operational testing of the plant which shall be witnessed by the Engineer and other City personnel. City O&M personnel will assist the Contractor during operational testing.

**** End of Section ****

DIVISION 17 – INSTRUMENTATION

SECTION 17100

PROCESS CONTROL AND INSTRUMENTATION SYSTEMS

PART 1 - GENERAL

1.01 SCOPE

A. The Contractor shall provide the following Instrumentation and Control components in accordance with the Contract Documents. The components shall include, but not be limited to, the following:

1. Instruments specified in Division 17000, “Instrumentation”.
2. Local control stations not provided as components of the specified equipment.
3. All Control Cabinets which are **not** equipped with the PLCs.
4. Fiber optic cabling, area switches (where noted on the drawings), hubs, valve networks, copper cabling, and related equipment.

B. The requirements of this Section apply to all components of the Control System unless indicated otherwise.

C. Responsibilities:

1. The Contractor, through the use of a qualified Instrumentation Supplier and qualified Electrical and Mechanical installers, shall be responsible to the City for the supplying, installation, labeling and termination of all instruments to the City furnished control cabinets and consoles.
2. The Contractor shall install all City furnished control cabinets and install City furnished consoles and connect external wires (i.e. power and Ethernet).
3. Due to the complexities associated with the interfacing of numerous instruments, panels, local controls, PLC I/O devices, it is the intent of these specifications that the Instrumentation Supplier be responsible to the Contractor for the installation and termination of the components to both new and existing devices provided under other Sections of this contract.
4. The Instrumentation Supplier shall perform the following work:
   a. Prepare submittals.
   b. Design, develop, and electronically draft loop drawings and control panel designs.
   c. Prepare the test plan and the spare parts submittals.
   d. Perform setup, bench calibration and loop checks after installation.

e. Oversee and certify installation of all devices provided under Division 17, “Instrumentation”.

f. Oversee, document, and certify loop testing.

g. Provide hardware support during the performance test.

h. Prepare record drawings.

5. The City shall perform all PLC and operator interface panel programming.

1.02 REFERENCE PUBLICATIONS

A. The equipment covered under this contract shall be designed, manufactured, and tested in accordance with the latest version of the applicable industrial standards.

1.03 SUBMITTALS

A. Provide submittals in accordance with the Special Provisions. Submittals shall be approved by the Engineer prior to manufacture and shipment.

B. Provide Operations and Maintenance Manuals as specified in the Special Provisions.

1.04 QUALITY ASSURANCE

A. The manufacturer shall verify that they have been fabricating and assembling similar equipment for a minimum of five (5) years.

PART 2 - PRODUCTS

2.01 GENERAL

A. Code and Regulatory Compliance

1. All work shall conform to or exceed the applicable requirements of the National Electrical Code (NEC).

B. Current Technology

1. All meters, instruments, and other components shall be the most recent field-proven models marketed by their manufacturers at the time of submittal of the shop drawings unless otherwise required to match existing equipment.

C. Hardware Commonality

1. All instruments which utilize a common measurement principle (for example, d/p cells, pressure transmitters, level transmitters which monitor hydrostatic head) shall be furnished by a single Manufacturer. All panel mounted instruments shall have matching style and general appearance. Instruments performing similar functions shall be of the same type, model, or class, and shall be from a single Manufacturer.

D. Loop Accuracy

1. The accuracy of each instrumentation system or loop shall be determined as a probable maximum error; this shall be the square-root of the sum of the squares of certified "accuracies" of the designated components in each system, expressed as a percentage of the actual span or value of the measured variable. Each individual instrument shall have a minimum accuracy of plus and minus 0.50-percent of full scale and a minimum repeatability of plus and minus 0.25-percent of full scale unless otherwise indicated. Instruments which do not conform to or improve upon these criteria are not acceptable.

E. Instrument and Loop Power

1. Power requirements and input/output connections for all components shall be verified. Power for transmitted signals shall, in general, originate in and be supplied by the control panel devices. All power supplies shall be mounted within control panels or in the field at the point of application.

2.02 SPARE PARTS AND SPECIAL TOOLS

A. The Contractor shall furnish a list of all spare parts and special tools required to calibrate and maintain all of the instrumentation provided under the Contract Documents.

2.03 FACTORY TESTING

A. The Contractor shall provide copies of all factory tests for each piece of instrumentation.

B. The Contractor shall provide the Engineer with a factory calibration sheet on the flow meter indicating that the flow tube was calibrated at the factory.

C. The Contractor shall provide the Engineer with a factory calibration sheet on the drawdown transducer indicating that it was calibrated at the factory.

D. The Contractor shall provide the Engineer with a factory calibration sheet on the chlorine leak detector indicating that it was calibrated at the factory.

E. The Contractor shall provide the Engineer with a calibration certificate that includes the following:

1. Model and serial number of each instrument tested
2. NIST report numbers
3. The actual test data
4. Test standards
5. Date and time of the test

PART 3 - EXECUTION

3.01 PRODUCT HANDLING

A. Tagging

1. Each component shall be tagged to identify its location, instrument tag number, and function in the system. A permanent stainless steel or other non-corrosive material tag firmly attached and permanently and indelibly marked with the instrument tag number, as

given in the plans, shall be provided on each piece of the instrumentation. Identification shall be prominently displayed on the outside of the package.

3.02 MANUFACTURER'S SERVICES

A. The Contractor shall furnish the following Manufacturer's services for the instrumentation listed below:

1. Perform factory calibration
2. Oversee installation
3. Verify installation of installed instrument
4. Certify installation and reconfirm Manufacturer's accuracy statement
5. Oversee loop testing, prepare loop validation sheets, and certify loop testing
6. Oversee pre-commissioning, prepare pre-commissioning validation sheets, and certify pre-commissioning
7. Train the Owner's personnel

B. Manufacturer's services shall be furnished for the following equipment:

1. All probes
2. Flow meters
3. Drawdown transmitter
4. Chlorine leak detector

3.03 INSTALLATION

A. All instrumentation, including instrumentation furnished under other Divisions, shall be installed under Division 17, “Instrumentation”, and the manufacturers' instructions.

B. The monitoring and control system configurations indicated are diagrammatic. The locations of equipment are approximate. The exact locations and routing of wiring and cables shall be governed by structural conditions and physical interferences and by the location of electrical terminations on equipment. All equipment shall be located and installed so that it will be readily accessible for operation and maintenance. Where job conditions require reasonable changes in approximated locations and arrangements, or when the City exercises the right to require changes in location of equipment which do not impact material quantities or cause material rework, the Contractor shall make such changes without additional cost to the City.

C. All power and signal wires shall be terminated with crimped type lugs.

D. All connectors shall be water tight.

E. All wires shall be mounted clearly with an identification tag that is of a permanent and reusable nature.

F. All wire and cable shall be arranged in a neat manner and securely supported in cable groups and connected from terminal to terminal without splices unless specifically approved by the Engineer. All wiring shall be protected from sharp edges and corners.

G. All mounting stands and bracket materials and workmanship shall comply with requirements of the Contract Documents.

3.04 CALIBRATION

A. General

1. All devices provided under Division 17, “Instrumentation”, shall be calibrated according to the manufacturer's recommended procedures to verify operational readiness and ability to meet the indicated functional and tolerance requirements.

B. Calibration Points

1. Each instrument shall be calibrated at 20, 40, 60, 80 and 100% of span using test instruments to simulate inputs. The test instruments shall have accuracy’s traceable to National Institute of Testing Standards.

C. Factory Calibration

1. Instruments which have been factory calibrated shall be examined in the field to determine whether any of the calibrations are in need of adjustment. Such adjustments, if required, shall be made only after consultation with the Engineer.

D. Field Calibration

1. Instruments which were not bench-calibrated shall be calibrated in the field to insure proper operation in accordance with the instrument loop diagrams or specification data sheets.

E. Calibration Sheets

1. Each instrument calibration sheet shall provide the following information and a space for sign-off on individual items and on the completed unit:
    a. Project name
    b. Loop number
    c. Tag number
    d. Manufacturer
    e. Model number
    f. Serial number
    g. Calibration range
    h. Calibration data: Input, output, and error at ten percent (10%), fifty percent (50%), and ninety percent (90%)
    i. Switch setting, contact action, and deadband for discrete elements
    j. Space for comments
    k. Space for sign-off by Instrumentation Supplier and date
    l. Test equipment used and associated serial numbers

F. Calibration Tags

1. A calibration and testing tag shall be attached to each piece of equipment or system at a location determined by the Engineer. The Contractor shall have the Instrumentation Supplier sign the tag when calibration is complete. The Engineer will sign the tag when the calibration and testing has been accepted.

3.05 LOOP TESTING

A. General

1. Individual instrument loop diagrams per ISA Standard S5.4 - Instrument Loop Diagrams, expanded format, shall be submitted to the Engineer for review prior to the loop tests. The Contractor shall notify the Engineer of scheduled tests a minimum of thirty (30) days prior to the estimated completion date of installation and wiring of the instrument. After the Engineer's review of the submitted loop diagrams for correctness and compliance with the specifications, loop testing shall proceed. The loop check shall be witnessed by the Engineer.

B. Control Valve Tests

1. All control valves, cylinders, drives and connecting linkages shall be stroked from the operator interface units as well as local control devices and adjusted to verify proper control action, hand switch action, limit switch settings, torque settings, remote control actions, and remote feedback of valve status and position. Control valve actions and positioner settings shall be checked with the valves in place to insure that no changes have occurred since the bench calibration.

C. Interlocks

1. All hardware and software interlocks between the instrumentation and the motor control circuits, control circuits of variable-speed controllers and packaged equipment controls shall be checked to the maximum extent possible.

D. Instrument and Instrument Component Validation

1. Each instrument shall be field tested, inspected, and adjusted to its indicated performance requirement in accordance with its Manufacturer's specifications and instructions. Any instrument which fails to meet any Contract requirement, or, in the absence of a Contract requirement, any published manufacturer performance specification for functional and operational parameters, shall be repaired or replaced, at the discretion of the Engineer at no additional cost to the Owner.

E. Loop Validation Sheets

1. The Contractor shall prepare loop confirmation sheets for each loop covering each active instrumentation and control device except simple hand switches and lights. Loop confirmation sheets shall form the basis for operational tests and documentation. Each loop confirmation sheet shall cite the following information and shall provide spaces for sign-off on individual items and on the complete loop by the Instrumentation Supplier:

    a. Project name

    b. Loop number

    c. Tag number, description, manufacturer and model number for each element

    d. Installation bulletin number

e. Specification sheet number

f. Loop description number

g. Adjustment check

h. Space for comments

i. Space for loop sign-off by Instrumentation Supplier and date

j. Space for Engineer witness signature and date

F. Loop Certifications

1. When installation tests have been successfully completed for all individual instruments and all separate analog control networks, a certified copy of all test forms signed by the Engineer or the Engineer's representative as a witness, with test data entered, shall be submitted to the Engineer together with a clear and unequivocal statement that all instrumentation has been successfully calibrated, inspected, and tested.

3.06 PRECOMMISSIONING

A. General

1. Pre-commissioning shall commence after acceptance of all wire tests, calibration tests and loop tests, and all inspections have demonstrated that the instrumentation and control system complies with all Contract requirements. Pre-commissioning shall demonstrate proper operation of all systems with process equipment operating over full operating ranges under conditions as closely resembling actual operating conditions as possible.

B. Pre-commissioning Procedures and Documentation

1. All pre-commissioning and test activities shall follow detailed test procedures and check lists accepted by the Engineer. All test data shall be acquired using equipment as required and shall be recorded on test forms accepted by the Engineer, which include calculated tolerance limits for each step. Completion of all system pre-commissioning and test activities shall be documented by a certified report, including all test forms with test data entered, delivered to the Engineer with a clear and unequivocal statement that all system pre-commissioning and test requirements have been satisfied.

C. Loop Tuning

1. All electronic control stations incorporating proportional, integral or differential control circuits shall be optimally tuned, experimentally, by applying control signal disturbances and adjusting the gain, reset, or rate settings as required to achieve a proper response. Measured final control element variable position/speed set point settings shall be compared to measured final control element position/speed values using percentages of 20, 40, 60, 80, 100, 80, 60, 40, and 20% of span and the results checked against indicated accuracy tolerances.

D. Pre-commissioning Validation Sheets

1. Pre-commissioning shall be documented on one of two types of test forms as follows:

a. For functions which can be demonstrated on a loop-by-loop basis, the form shall include:

i. Project name

ii. Loop number

iii. Loop description

iv. Tag number, description, manufacturer and data sheet number for each component.

b. For functions which cannot be demonstrated on a loop-by-loop basis, the test form shall be a listing of the specific tests to be conducted. With each test description the following information shall be included:

i. Specification page and paragraph of function demonstrated

ii. Description of function

iii. Space for sign-off and date by both the Instrumentation Supplier and Engineer

E. Pre-commissioning Certification

1. The Contractor shall submit an instrumentation and control system pre-commissioning completion report which shall state that all Contract requirements have been met and shall include a listing of all instrumentation and control system maintenance and repair activities conducted during the pre-commissioning testing. Acceptance of the instrumentation and control system pre-commissioning testing must be provided in writing by the Engineer before the performance testing may begin. Final acceptance of the control system shall be based upon plant completion as stated in the General Conditions.

3.07 TRAINING

A. General

1. The Contractor shall train the Owner's personnel on the maintenance, calibration and repair of all instruments provided under this Contract.

B. Instructions

1. The training shall be performed by qualified representatives of the equipment manufacturers and shall be specific to each piece of equipment.

C. Duration

1. Each training class shall be a minimum of eight (8) hours in duration and shall cover, as a minimum, operational theory, maintenance, troubleshooting/repair, and calibration of the instrument.

D. Schedule

1. Training shall be performed during the pre-commissioning phase of the project. The training sessions shall be scheduled a minimum of three (3) weeks in advance of when the courses are to be initiated. The Engineer will review the course outline for suitability and provide comments that shall be incorporated.

E. Agenda

1. The training shall include operation and maintenance procedures, troubleshooting with necessary test equipment, and changing set points, and calibration for that specific piece of equipment.

F. Documentation

1. The Contractor shall provide a copy of the training materials utilized during the lesson with all notes, diagrams, and comments.

3.08 ACCEPTANCE

A. For the purpose of this Section, the following conditions shall be fulfilled before the work is considered substantially complete:

1. All submittals have been completed and approved.
2. The instrumentation has been calibrated, loop tested and pre-commissioned.
3. The Owner training has been performed.
4. All required spare parts and expendable supplies and test equipment have been delivered to the Engineer.
5. The performance test has been successfully completed.
6. All punch-list items have been corrected.
7. All record drawings in both hard copy and electronic format have been submitted.
8. Revisions to the Owner's Manuals that may have resulted from the field tests have been made and reviewed.
9. All debris associated with installation of instrumentation has been removed.
10. All probes, elements, sample lines, transmitters, tubing, and enclosures have been cleaned and are in like-new condition.

**** End of Section ****

SECTION 17101

INSTRUMENTATION

PART 1 - GENERAL

1.01 SCOPE

A. This Section covers the furnishing, installation, and testing of instrumentation as specified herein, as shown on the Drawings, and as required for a complete installation.

1.02 REFERENCE PUBLICATIONS

A. The equipment covered under this contract shall be designed, manufactured, and tested in accordance with the latest version of the applicable industrial standards.

1.03 SUBMITTALS

A. Provide submittals in accordance with the Special Provisions. Submittals shall be approved by the Engineer prior to manufacture and shipment.

B. Provide Operations and Maintenance Manuals as specified in the Special Provisions.

1.04 QUALITY ASSURANCE

A. The manufacturer shall verify that they have been fabricating and assembling similar equipment for a minimum of five (5) years.

PART 2 – PRODUCTS

2.01 PRESSURE TRANSMITTER

A. The water pressure transmitter shall have an accuracy of ±0.25% of span with a power supply voltage varying between 12.5 to 36-Volts DC. The static pressure ratings shall be 150-psi and the diaphragm material shall be stainless steel. Pressure transducer shall be equipped with built-in LCD indicator, Rosemount Option M6. The pressure transmitter shall be Rosemount "Smart" transmitter model No 3051TG-2-A-2B-2-1-J-S1-B4-M6 or approved equal. Each unit shall be calibrated for 0 to 85-psi at the factory and recorded on a calibration sheet. The calibration sheet shall be provided to the Engineer and filed in the O&M manual.

2.02 DRAWDOWN TRANSMITTER

A. The drawdown transmitter shall be a small bore submersible level transducer. It shall have following features:

1. Ported nose cap

2. Vented gage
3. Analog output of 4~20mA
4. Type 316 Stainless steel construction
5. Molded cable seal
6. Polyurethane cable
7. Lightning protection
8. Vented (Desiccant) Filter
9. Junction box with vent filter

B. The drawdown transmitter shall be Esterline Series 300 or approved equal.

C. The level range, cable length and exact part number will be dependent on the well pump test, water column, and submersible pump set level. The Contractor shall provide submittals to the City and the City will select the level range of each drawdown transmitter.

D. The drawdown transmitter shall be installed in a still well as shown on the Plans and shall be installed 10-feet above the suction opening of the pump. The Contractor shall order enough cable so there are no splices between each drawdown transmitter and the PLC with minimum spare cable. Contractor shall not trim the transmitter cable for any reason.

E. The Contractor shall order the junction box (Model No. 840) with the vent filter for each drawdown transmitter. The contractor install mount the junction box inside the PLC cabinet. The contractor shall install the lighting protection module inside the PLC cabinet on the DIN rail and install per the manufacturer's instructions.

F. The level range, cable length and part number are shown in the following table:

Well No.	Level Range	Cable Length	Part No.
94	10-ft to 150-ft	See below	330-S14-B0B-065.010-004-334-B1-####-B
107	10-ft to 150-ft	See below	330-S14-B0B-065.010-004-334-B1-####-B
120	10-ft to 150-ft	See below	330-S14-B0B-065.010-004-334-B1-####-B
122	10-ft to 150-ft	See below	330-S14-B0B-065.010-004-334-B1-####-B
126	10-ft to 150-ft	See below	330-S14-B0B-065.010-004-334-B1-####-B
129	10-ft to 150-ft	See below	330-S14-B0B-065.010-004-334-B1-####-B
133	10-ft to 150-ft	See below	330-S14-B0B-065.010-004-334-B1-####-B
138	10-ft to 150-ft	See below	330-S14-B0B-065.010-004-334-B1-####-B
**10-ft of water = 4.334 psi			

The submersible pumps and drawdown transmitters shall be set as shown in the following table.

Well No.	Pump Intake Depth (ft)	Drawdown Transmitter Depth (ft)
94	120	110

107	140	130
120	130	120
122	120	110
126	130	120
129	125	115
133	140	130
138	160	150

The length of the transmitter cable for each well shall be equal to the drawdown transmitter depth plus the distance from the well head to the PLC plus one percent (1%). Contractor shall confirm well drawdown water surface elevation prior to ordering the drawdown transmitters. Contractor shall obtain written approval from the City prior to ordering the drawdown transmitters.

2.03 CHLORINE GAS MONITOR

A. The chlorine gas monitor shall have the following features:

1. LED Display
2. Analog Outputs 4~20mA
3. Alarm Set Points and Relays
4. Sensor Auto-test
5. NEMA 4X enclosure

B. The Chlorine Gas Monitor shall be Analytical Technology, Inc. GasSens Modular Gas Detector Model A14/A11-11-0026-1-2 including the following parts:

1. Two Module Enclosure - 80-0006
2. Power Supply Module - 00-0055
3. Calibration adapter for A10 sensor - 00-0118
4. A10 Sensor - 00-0081

2.04 AIRCHARGING SYSTEM

A. The Universal Aircharging System for the hydropneumatic tank shall have the following characteristics:

1. Dual voltage motor, auto ranging 115V/230V level control, and wide pressure range
2. Dual voltage motor with selector switch for easy voltage selection 115V/230V
3. Direct access terminal block for faster installation
4. High capacity compressor for faster tank charging and larger tank capacity
5. Strain relief on probe connection
6. Stainless steel fasteners

7. Rodent proof air vents, improved air lines and heavy duty cover for harsh environments
8. Wire probe
9. Liquid level switch
10. Pressure switch

B. The Universal Aircharging System shall be ChargeAir 2000 manufactured by MAASS Midwest Inc. or Engineer approved equal.

C. The Contractor shall furnish and install the Universal Aircharging System as specified above at all eight wells. It should include all the mounting brackets, hardware, pipes, conduits, wires and all the labor and material for a complete working system.

2.05 CABINET DOOR SWITCH

A. The Contractor shall install a cabinet door switch to each door on each MCC unit. The Contractor shall mount the cabinet door switch near the bottom of each cabinet. The cabinet door switch shall be Eaton model number 10316H828 with plunger or approved equal.

2.06 MAGNETIC DOOR SWITCH

A. The Contractor shall install a magnetic door switch to each motor junction box for each well. The magnetic door switch shall be Sentrol model number 1044TW or approved equal. Color shall be natural (off-white).

PART 3 - EXECUTION

3.01 SHIPPING, HANDLING, AND DELIVERY

A. The instrumentation equipment shall be protected for shipment by the manufacturer.

3.02 INSTRUMENTATION EQUIPMENT INSTALLATION

A. The instrumentation equipment shall be installed per the manufacturer's recommendation and as shown on the plans.

3.03 STARTUP ASSISTANCE BY MANUFACTURE'S LOCAL REPRESENTATIVE

A. The manufacturer shall provide delivery inspection, technical advice, startup inspection, job site operational diagnostics and calibration, approve/certify for operation, operational assistance, and one 2-hour Operation and Maintenance training class covering all instrumentation specified in this Section. The Contractor shall provide an ISA calibration sheet for each instrument supplied. Each instrument shall then be calibrated to ISA standards and recorded.

B. Pressure measuring systems shall be handled, installed, calibrated, loop-tested, pre-commissioned, and performance tested according to Section 17100, "Process Control and Instrumentation Systems".

C. All instrumentation shall be tested and calibrated as outlined in Section 17100, "Process Control

and Instrumentation Systems".

D. All sensors shall be loop calibrated at the factory as a complete assembly (see Section 17100, "Process Control and Instrumentation Systems").

PART 4 - WARRANTY

4.01 MANUFACTURER'S WARRANTY

A. The manufacturer shall provide a one year warranty that covers parts, labor and travel. The warranty period shall start of the day the City accepts the project.

**** End of Section ****

SECTION 17102

FLOW MEASURING SYSTEMS

PART 1 - GENERAL

1.01 SCOPE

A. This Section covers the furnishing, installation, and testing of eight (8) magnetic flow measuring systems as specified herein, as shown on the Drawings, and as required for a complete installation. The Contractor shall install a new 8-inch magnetic flow measuring system for each well site.

B. The Contractor shall remove and salvage the existing flow meter at each well site.

1.02 REFERENCE PUBLICATIONS

A. The equipment covered under this contract shall be designed, manufactured, and tested in accordance with the latest version of the applicable industrial standards.

1.03 SUBMITTALS

A. Provide submittals in accordance with Section 01330, “Submittals”. Submittals shall be approved by the Engineer prior to manufacture and shipment.

B. Provide Operations and Maintenance Manuals as specified in Section 01330, “Submittals”.

1.04 QUALITY ASSURANCE

A. The manufacturer shall verify that they have been fabricating and assembling similar equipment for a minimum of five (5) years.

PART 2 - PRODUCTS

2.01 MAGNETIC FLOW MEASURING SYSTEMS

A. General

1. Magnetic flow measuring systems shall measure volumetric flow rate by detecting the velocity of a conductive liquid that passes through a magnetic field. The flowtube shall be installed in-line with the process piping. Coils located on opposite sides of the flowtube shall create a magnetic field. As the conductive fluid moves through this field, a voltage shall be generated that is linearly proportional to the flow. The transmitter shall condition this voltage and produce output signals that are proportional to the velocity of the fluid being metered.

2. Each magnetic flow measuring system shall include a flowtube, signal cable, transmitter, and grounding rings. Each system shall be FM approved and intrinsically

safe.

B. Flowtube

1. Flanged Type

   a. In-line flow element with no constrictions in flow of fluid through meter consisting of metallic tube with ANSI B16.5, Class 150 bolt pattern. Flange material shall be compatible with the piping material and corrosion resistant. This flowtube will be installed in an area subject to periodic submergence and shall be I.P. 68 rated.

2. Electrode and liner materials shall be fully compatible with the process fluid. Refer to the chart below for electrode and liner material requirements. The liner shall meet the current requirements of the NSF/ANSI Standard 61. Provide written certification of the NSF/ANSI Standard 61 for each meter.

Process Fluid.	Liner	Electrode
Drinking Water	Polyurethane	316 Stainless Steel

3. Grounding rings shall be Type 316L stainless steel, with an external tab to attach ground wiring. Contractor shall connect the grounding rings per the manufacturer's recommendations.

C. Transmitter

1. Transmitter shall be integral mount.
2. Transmitter shall contain a backlit LCD display used for programming as well as for simultaneous display of flow rate and total flow in user-selectable engineering units, and readout of diagnostic error messages
3. Shall be furnished with local flow rate indication and local flow totalization indication, and scaled in user selectable engineering units.
4. Diagnostics shall include self-test, transmitter faults, tunable empty pipe parameter, reverse flow testing, coil circuit fault, electronics temperature monitoring, magnetic field strength, ground wiring fault, high process noise analysis, and shall provide for calibration verification.
5. Power Supply - 24 VDC.
6. System Accuracy +/- 0.25% of rate from 1.0 to 30-feet per second.
7. Provide the manufacturer's cable(s) to be installed between the transmitter and the flowtube.
8. Housing shall be rated NEMA 4X.
9. Operating range shall be from -5 to 140°F and 0 to 100-percent relative humidity.
10. Local confirmation and diagnostic capability by a handheld communicator or software.

D. Signal Converter/Transmitter Output

1. Ethernet IP or Modbus TCP/IP communication protocol.
2. Shall be capable of indicating reverse flow and zero flow.
3. Security lockout to prevent unwanted or unintentional changes.

4. The transmitter shall have an Ethernet port and built-in webserver for easy data access and configurations.

E. Factory Calibration

1. Flowtube shall be hydraulically calibrated at a facility, which is traceable to internationally recognized Calibration Standards. The calibration procedure shall conform to the requirements of (ISO) 10012-1, and "Quality Assurance Requirements for Measuring Equipment". A real-time computer generated printout of the actual calibration data indicating a three point calibration of the entire operating range shall be submitted to the Engineer prior to shipment of the meters to the project site. The calibration sheet shall also be filed with the O&M manual.

F. Approved Manufacturers

1. Endress & Hauser Promag L400
2. Approved equal.

PART 3 - EXECUTION

3.01 SHIPPING, HANDLING, AND DELIVERY

A. The flow meters and associated equipment shall be protected for shipment by the manufacturer. The manufacturer shall take pictures of the flowmeter(s) and associated equipment before and during the crating process. The pictures shall be submitted to the Engineer. The manufacturer's Local Representative shall be present at the delivery of each flow meter to the job site.

B. The Engineer as well as the manufacture's local representative must be on-site to witness the Contractor's unloading of the flow meter(s) and associated equipment. The manufacturer's local representative shall witness the uncrating of each meter and then inspect, verify, and certify in a written inspection report to the Engineer that all flowmeters and associated equipment have been inspected, are present, damage free, and ready for installation.

3.02 FLOWMETER AND ASSOCATED EQUIPMENT INSTALLATION

A. The flow meter(s) shall be installed per the manufacturer's recommendations and as shown on the Plans.

B. The work to install the flow meters shall consist of cutting the existing water pipe and welding matching steel flanges on the pipe side if necessary. The Contractor shall paint the flanges with two coats of paint. The Contractor shall also provide stainless steel bolts, nuts, the pipe seals, and ground rings.

3.03 STARTUP ASSISTANCE BY MANUFACTURE'S LOCAL REPRESENTATIVE

A. The manufacturer shall provide delivery inspection, technical advice, startup inspection, Job-site operational diagnostics and calibration, approve/certify for operation, operational assistance, and one (1) 2-hour Operation and Maintenance training class.

PART 4 - WARRANTY

4.01 MANUFACTURER'S ORIGINAL WARRANTY AND EXTENDED WARRANTY

A. The manufacturer shall provide a one (1) year warranty that covers parts, labor and travel. The warranty period shall start of the day the City accepts the project.

**** End of Section ****

SECTION 17520

PROGRAMMABLE LOGIC CONTROLLER SYSTEM

PART 1 - GENERAL

1.01 SCOPE

A. This Section covers the furnishing, programming, and installation of a Programmable Logic Controller (PLC) system, antenna cable, and other appurtenances necessary for a complete and operating system. All items covered in this specification shall be included as part of this contract. All items covered in this specification shall be provided by the Contractor. The PLC system shall contain a Modicon PLC, I/O modules, power supply, radio transceiver, circuit breakers, fuses, panduit, terminal blocks and all devices necessary for a complete system. This system shall be mounted on DIN rail inside the control panel as shown on the Plans. The City will provide all the programming for the PLC and operator interface panel. The City will be responsible for providing all necessary work so that the PLC communicates with its regional site. This includes development of SCADA display graphic screens on the master SCADA network.

B. The Contractor shall make all connections to the PLC per Plans. The City will verify Contractor made interconnection wiring, will perform software upgrade, display screen upgrade, communication establishment and testing.

C. The Contractor shall cooperate with the City during testing and start up. The contractor shall perform an input output check on all devices connected to the PLC before the City installs the PLC and operator interface programs.

D. The contractor shall remove the existing PLC and back pan at each well site.

E. The contractor shall reuse the existing antenna pole and antenna. The contractor shall intercept the existing antenna conduit from each antenna pole and extend it into the new control panel.

F. The Contractor shall replace the existing antenna cable with new antenna cable at each well site. The contractor shall order enough antenna cable so there are no splices between the antenna and the radio. The Contractor shall deliver the existing antenna cable to the City.

1.02 REFERENCE STANDARDS

A. The publications referred to hereinafter form a part of this specification to the extent referenced. The publications are referred to in the text by the basic designation only. Unless otherwise indicated, the latest edition of referenced publications in effect at the time of the bid shall govern. In case of conflict between the requirements of this Section and those of the listed documents, the requirements of this Section shall prevail. The equipment covered under this contract shall be designed, manufactured, and tested in accordance with the latest version of the following industrial standards:

Institute of Electrical and Electronic Engineers (IEEE)

C37.90.2	Trial Use Standard Withstand Capability of Relay Systems to Radiated Electromagnetic Interference from Transceivers
C62.41	Recommended Practice on Surge Voltages in Low Voltage AC Power Circuits

Electronic Industries Association (EIA)	
TIA-232-E	Interface Between Data Terminal Equipment and Data Circuit Terminating Equipment Employing Serial Binary Data Interchange
422-A	Electrical Characteristics of Balanced Voltage Digital Interface Circuits

National Electrical Manufacturers Association (NEMA)	
ICS 1	General Standards for Industrial Control and Systems
ICS 1.1	Safety Guidelines for the Application, Installation and Maintenance of Solid State Control
ICS 4	Terminal Blocks for Industrial Use
ICS 6	Enclosures for Industrial Controls and Systems

National Fire Protection Association (NFPA)	
NEC	National Electric Code

1.03 SUBMITTALS

A. Provide four (4) copies of submittals, in accordance with the Special Provisions, for all PLC and radio components within the PLC system including the following:
   1. All PLC components
   2. Radio
   3. Antenna and transmission cables

PART 2 - PRODUCTS

2.01 PLC SYSTEM

A. PLC and associated equipment shall be mounted on DIN rail as shown on the Plans. The PLC system shall contain the following features:

B. PLC system grounding and electrical spacing shall be in accordance with NEMA ICS 6.

C. PLC shall be wired as defined below:
   1. Install all wiring without splicing in panduit raceways as shown on the plans.
   2. Wire bending space shall be in accordance with Tables 3-7B, C in NEMA ICS 6.

3. Keep AC power lines separate from low-level DC lines, I/O power supply cables, and all I/O rack interconnect cables.
4. Keep AC signal wires separate from DC signal wires.
5. When I/O wiring must cross AC power wiring, it shall only do so at right angles.
6. Allow 2-inches between the I/O modules and any raceway, between the terminal strip and raceway, and between the terminal strip and I/O modules.
7. Bundle and tie down wires in a neat and orderly manner.

D. The PLC system shall be grounded as follows:

1. Separate ground wires from power wiring at the point of entry.
2. Minimize ground wire length by locating the ground reference point as close as possible to the point of entry of the plant power supply.
3. Ground all electrical racks or chassis and machine elements to a central ground bus.

E. PLC termination requirements:

1. Terminal block markings, mechanical characteristics and electrical characteristics shall be in accordance with NEMA ICS 4.
2. Make connections to I/O modules by terminating all field wiring to terminals and then installing wiring to each I/O modules as shown on the Plans.
3. Terminals shall facilitate wire sizes 12-AWG and 14-AWG rated for 120-VAC applications.
4. Provide terminal blocks as shown on the Plans and with continuous marking strip.
5. Label each wire within the PLC system with wire numbers as shown on the Plans.
6. Provide terminals for individual termination of each signal shield.
7. Provide all wiring between the terminal blocks and the PLC components.
8. Field wiring shall not be disturbed when removing or replacing an I/O module.

2.02 PLC AND INTERFACE MODULES

A. The programmable logic controllers shall be **Groupe Schneider, Modicon 340 Series.** No other manufacturer shall be permitted as this equipment matches the City's installed base of Modicon PLCs**.** The City has standardized on Modicon PLCs throughout the City and has an installed base of several hundred units.

B. Provide the following Modicon M340 PLC parts for each well:

1. One Rack – model number BMX XBP 1200
2. One Processor – model number BMX P34 2020
3. One Power Supply – model number BMX CPS 3020
4. One Discrete Digital Input Module – model number BMX DDI 1602
5. One Discrete Digital Output Module – model number BMX DDO 1602
6. One Analog Input Module – model number BMX AMI 0810

7. One Analog Output Model – model number BMX AMO 0410
8. One Communication Module – model number BMX NOC 0401
9. One Communication Module – model number BMX NOE 0100
10. One Communication Module – model number BMX NOM 0200
11. One Shielded Cord set – model number BMX FTW 308S
12. One Shielded Cord set – model number BMX FTW 301S
13. Two Cord set – model number BMX FTW 301
14. One set of empty slots – model number BMX XEM 010

2.03 PERFORMANCE AND DESIGN REQUIREMENTS

A. The PLC system shall accomplish the control requirements of the I/O list, Drawings, and Specifications.

B. The design application and installation of the PLC system shall conform to NEMA ICS 1.1.

C. The PLC system shall operate in ambient conditions of 32 to 140°F temperature and 0 to 95-percent relative humidity without the need for purging or air conditioning.

D. Input/Output Connection Requirements

   1. Discrete inputs/outputs and analog outputs shall be fused as recommended by the manufacturer:

      a. Fuses shall be in accordance with module manufacturer's specifications and installed at terminal block.

E. All PLC control system components shall be capable of meeting or exceeding electromagnetic interference tests per ANSI/IEEE C37.90.2.

F. Fuses

   1. Provide all fuse holders and fuses as shown on the plans.

2.04 MAINTENANCE MATERIALS

A. Furnish the City with operation and maintenance manuals in accordance with the Special Provisions. Operation and maintenance manuals shall contain information on all components within this specification. The operations and maintenance manuals shall also be provided on a CD in accordance with the Special Provisions.

2.05 RADIO TRANSCEIVERS

A. Provide one (1) Microhard Systems Nano Series IPn920T Radio per well. Contractor shall hand over the new radios to the City. The radio shall be capable of transmitting data either serial or Ethernet. The operating frequency shall be 902-MHz to 928-MHz. The radio shall be powered by 24 VDC.

2.06 DIRECTIONAL ANTENNA FOR RADIO

A. The contractor shall reuse the existing antenna on the existing antenna pole. Provide one (1) lightning arrester model number Polyphaser Corp. IS-50NX-C2 or approved equal.

2.07 TRANSMISSION CABLES

A. Supply the transmission cables to connect each radio antenna port (via 50-ohm "Superflex" cable/lightning arrester) with the existing antennas. The cables shall be low-loss foam-dielectric type, 1/2-inch in diameter, and sufficient length to route each cable from the existing antennas to each lightning arrester (field verify). The transmission cables shall be weatherproof suitable for direct environmental exposure. Use "O" ring seals on all connectors. **The transmission cables shall be Andrew Corp. LDF4-50A.** The cables shall be installed without splices.

B. Provide a section of "Superflex" cable between each radio and the lightning arresters. The cables shall be Andrew Corp. FSJ1-50A or approved equal with factory installed type N connectors.

C. Connectors for the transmission cable shall be type N.

D. The Contractor shall field verify the length of antenna cable required for the project. The cables shall be installed without splices.

PART 3 - EXECUTION

3.01 INSTALLATION

A. The Contractor shall be responsible for the installation of the PLC system and shall pull all the cables and wires and make all the connections as shown on the Plans or as directed by the Engineer. The PLC system shall be installed in accordance with manufacturer's written instructions.

B. The City will perform the following work:

1. Verification of correct installation of PLC system.
2. Verification of correct installation, type, and size of wiring terminated from field devices, and to the PLC system.
3. Verification of correct connection of all power sources supplied to and from the PLC system.
4. Verification of I/O terminations and proper device calibrations.
5. Verify that all data points are transmitted back to Control 12 and update the Control 12 database.

C. If deficiencies are found in Paragraph 3.01.B, “Installation”, items 1 through 5 above, the Contractor shall immediately correct the problem at no cost to the City.

D. The Contractor shall terminate the antenna and signal transmission cables with type N connectors.

E. The Contractor shall install the lightning protector, copper strap, and instrument grounding.

The Contractor shall install a No. 6 copper wire to connect the lightening arresters to the ground bus.

3.02 PLC FIELD TESTING

A. After finishing all the connections, the Contractor shall cooperate with the City during the field testing.

B. The City will perform the following:

   1. Configure radio communication parameters.
   2. Configure radio output power.

C. The Contractor shall perform a point to point test of all wiring between the PLC and field devices before the City installs the PLC and operator interface panel programs.

D. All devices connected to the digital input card shall be operated to ensure that the PLC recognizes the changed state of each device.

E. The City will program the PLC to operate all devices connected to the digital output card and then trigger these devices to operate. Any device that fails to operate shall be replaced at the contractor's expense.

F. All analog devices connected to the PLC shall be calibrated per Section 17100, "Process Control and Instrumentation Systems". Each analog device shall be operated to determine if the PLC recognizes the analog signal.

3.03 DEMONSTRATION

A. The Contractor shall demonstrate that the PLC system operates according to Plans and specifications. If defects are found in the hardware or installation Contractor shall fix problems at no cost to the City.

**** End of Section ****

SECTION 3 – ITEMS OF THE PROPOSAL

The items described below correspond to the items on the bid schedule. It is understood, that the Contractor shall furnish all labor, equipment, material, tools, parts and other items necessary to complete the work as described in the Plans and these Special Provisions at all eight well sites.

All bidders are required to provide the following information for the well casing rehabilitation components of the project:

1. Contractor qualifications
    a. A list of key staff that shall work on the project and descriptions of their experience on similar projects.
    b. Descriptions of at least five similar projects completed during the past five years including client contact information.
    c. A company profile including the number of years the company has been performing well screen rehabilitation.
    d. Current C-57 Water Well Drilling and Class A Contractor license numbers.
2. Details regarding specific materials, chemicals, concentrations, quantities, techniques (including details for agitating the near-well environment), tool specifications, chemistry monitoring techniques (for both the well and wastewater discharge) and Subcontractors to be used for work described in the Technical Specifications.
3. Details of any proposed variations from the Technical Specifications.
4. A statement that all staff that shall be on-site during the handling of chemicals shall be HAZWOPER trained with current annual refresher training.

ITEM 1: Pre-Mobilization Site Video

A. Description

This item shall include the creation of a video that documents above ground site conditions before the Contractor mobilizes to each site. See Section 2.1, “Pre-Mobilization Site Video”, of the Technical Specifications.

B. Measurement and Payment

Pre-Mobilization Site Video shall be measured and paid on a lump sum basis. Measurement shall be based on the percentage of work completed as determined by the City. Payment shall include full compensation for furnishing all supervision, labor, materials, tools and equipment necessary to complete this item, including transportation.

ITEM 2: Mobilization, Site Setup, Demobilization, and Site Cleanup

A. Description

This item shall include the mobilization, demobilization, establishment of storage and staging areas, all materials, tools, equipment, labor, supervision and other items necessary to facilitate mobilization to the sites and demobilization from each site. Other aspects of

this item include:1) preparation of the site for performance of the project work, 2) providing site security, 3) providing a portable toilet and sanitation facilities, 4) per diem, and 5) other costs that may not be shown as line items on the bid schedule. See Section 2.2, "Mobilization, Site Setup, Demobilization, and Site Clean-up", of the Technical Specifications.

B. Measurement and Payment

Mobilization, Demobilization and Site Setup shall be measured and paid on a lump sum basis. The value of this item shall not exceed five percent of the total value bid for the project. Measurement shall be based on the percentage of work completed as determined by the City. Payment shall include full compensation for furnishing all supervision, labor, materials, tools and equipment necessary to complete this item, including transportation.

ITEM 3: Pre-Cleaning Test Pumping

A. Description

This item shall include all materials, tools, equipment, labor, parts and other items necessary to test pump the well. See Section 2.3, "Pre-Cleaning Test Pumping", of the Technical Specifications.

B. Measurement and Payment

Pre-Cleaning Test Pumping shall be measured and paid per each test pumping completed to the satisfaction of the City. Payment shall be at the unit price bid per each and shall include full compensation for furnishing all supervision, labor, materials, tools, equipment and other items necessary to complete this item. Although a quantity is given for this item for purposes of identifying the low bidder, the unit price bid shall not be adjusted should the final quantity differ upon completion of the project.

ITEM 4: Pre-Cleaning Spinner Logging

A. Description

This item shall include providing all equipment, materials and labor, as necessary to complete the spinner log at each site. A report on the spinner logging and the sand testing results shall be provided to the Engineer within 48-hours of performing the work. See Section 2.4, "Pre-Cleaning Spinner Logging", of the Technical Specifications.

B. Measurement and Payment

Pre-Cleaning Spinner Logging shall be measured and paid per each spinner log completed to the satisfaction of the City. Although a quantity is given for this item for purposes of identifying the low bidder, the unit price bid shall not be adjusted should the final quantity differ upon completion of the project. Payment shall include full compensation for furnishing all supervision, labor, materials, tools, equipment and other items necessary to complete this item.

ITEM 5: Traffic Control

A. Description

This item shall include all materials, tools, equipment, labor, parts and other items necessary to provide traffic control at sites where sewer laterals are installed within City right-of-way, and where direct discharge into a drainage inlet, drainage manhole, or sewer manhole is performed in City right-of-way. See General Requirements, Section 1.27, "Maintenance of Traffic, Public Safety, and Convenience".

B. Measurement and Payment

Traffic Control shall be measured and paid on a lump sum basis. Measurement shall be based on the percentage of work completed as determined by the City. Payment shall include full compensation for furnishing all supervision, labor, materials, tools, equipment and other items necessary to complete this item.

ITEM 6: Well Casing Video Surveys

A. Description

This item shall include providing all equipment, materials and labor, as necessary to complete all requested video surveys. The video logging shall be in color, include down-hole viewing and side-scan viewing (with 360-degree capability), and extend to the total well depth. See Section 2.7, "Well Casing Video Surveys", of the Technical Specifications.

B. Measurement and Payment

Video Surveys shall be measured and paid for each video completed. Although a quantity is given for this item for purposes of identifying the low bidder, the unit price bid shall not be adjusted should the final quantity differ upon completion of the project. Measurement shall be based on the amount of work completed as determined by the City. Payment shall include full compensation for furnishing all materials, tools, equipment, labor, parts and other items necessary to complete the work.

ITEM 7: Screen and Casing Repair

A. Description

This item shall include all materials, tools, equipment, labor, parts and other items necessary to repair the well screen and casing. The exact scope of this item shall not be known until Bid Item No. 6 is completed. It is anticipated that the work shall entail swaging into place a mild steel liner with a rubber sleeve and video confirmation of the work. See Section 2.9, "Screen and Casing Repair", of the Technical Specifications. For the purposes of the bid, provide costs for lining a 10-foot section of casing or screen.

B. Measurement and Payment

Payment for Screen and Casing Repair shall be at the unit price bid per lineal foot of steel liner placed. Although a quantity is given for this item for purposes of identifying the low bidder, the unit price bid shall not be adjusted should the final quantity differ upon completion of the project. Payment shall include full compensation for furnishing all materials, tools, equipment, labor, parts and other items necessary to repair the well screen and casing.

ITEM 8: Post-Cleaning Spinner Logging

A. Description

This item shall include providing all equipment, materials, and labor as necessary to complete each spinner log. See Section 2.14, "Post-Cleaning Spinner Logging", of the Technical Specifications.

B. Measurement and Payment

Payment shall be at the unit price bid per each Post-Cleaning Spinner Logging completed as determined by the City. Although a quantity is given for this item for purposes of identifying the low bidder, the unit price bid shall not be adjusted should the final quantity differ upon completion of the project. Payment shall include full compensation for furnishing all supervision, labor, materials, tools, equipment and other items necessary to complete the work.

ITEM 9: Deviation Surveys

A. Description

This item shall include providing all equipment, materials and labor, as necessary to complete the deviation survey. See Section 2.15, "Deviation Survey", of the Technical Specifications.

B. Measurement and Payment

Payment for Deviation Surveys shall be at the unit price bid per each deviation survey completed as determined by the City. Although a quantity is given for this item for purposes of identifying the low bidder, the unit price bid shall not be adjusted should the final quantity differ upon completion of the project. Payment shall include full compensation for furnishing all supervision, labor, materials, tools, equipment and other items necessary to complete this item.

ITEM 10: Post-Cleaning Test Pumping

A. Description

This item shall include all materials, tools, equipment, labor, parts and other items necessary to test pump the well. See Section 2.16, "Post-Cleaning Test Pumping", of the Technical Specifications.

B. Measurement and Payment

Payment for Post-Cleaning Test Pumping shall be at the unit price bid per each test pumping completed as determined by the City. Although a quantity is given for this item for purposes of identifying the low bidder, the unit price bid shall not be adjusted should the final quantity differ upon completion of the project. Payment shall include full compensation for furnishing all supervision, labor, materials, tools, equipment and other items necessary to complete this item.

ITEM 11: Waste Solids Disposal

A. Description

This item shall include providing all equipment, materials, and labor as necessary to dispose of waste solids generated during the project. See Section 2.19, “Waste Solids Disposal”, of the Technical Specifications.

B. Measurement and Payment

Waste Solids Disposal shall be measured and paid on a lump sum basis. Measurement shall be based on the amount of work completed as determined by the City. Payment shall include full compensation for furnishing all materials, tools, equipment, labor, parts and other items necessary to properly dispose of waste solids generated during the project.

ITEM 12: Brushing and Sediment Removal

A. Description

This item shall include all materials, tools, equipment, labor, parts and other items necessary to brush the well and remove accumulated sediment. The work shall be performed in a single pass down the well. See Section 2.6, “Brushing and Sediment Removal”, of the Technical Specifications.

B. Measurement and Payment

Brushing and Sediment Removal shall be measured and paid per linear foot of casing brushed below the static water line of each well. Measurement shall be based on the amount of work completed as determined by the City. Although a quantity is given for this item for purposes of identifying the low bidder, the unit price bid shall not be adjusted should the final quantity differ upon completion of the project. Payment shall include full compensation for furnishing all materials, tools, equipment, labor, parts and other items necessary to brush the well, and remove accumulated sediment.

ITEM 13: Agitating the Near-Well Environment

A. Description

This item shall include all materials, tools, equipment, labor, parts and other items necessary to agitate the near-well environment. See Section 2.10, “Agitating the Near-Well Environment”, of the Technical Specifications. For the purposes of the bid, provide costs for performing a shot for every foot of screen length.

B. Measurement and Payment

Payment for Agitating the Near-Well Environment shall be per linear foot screen agitated. Although a quantity is given for this item for purposes of identifying the low bidder, the unit price bid shall not be adjusted should the final quantity differ upon completion of the project. Payment shall include full compensation for furnishing all materials, tools, equipment, labor, parts and other items necessary to agitate the near-well environment.

ITEM 14: Mechanical Cleaning

A. Description

This item shall include all materials, tools, equipment, labor, parts and other items necessary to mechanically clean the well. See Section 2.11, “Mechanical Cleaning”, of the Technical Specifications.

B. Measurement and Payment

Mechanical Cleaning shall be measured and paid per each mechanical cleaning process completed at a single well. Although a quantity is given for this item for purposes of identifying the low bidder, the unit price bid shall not be adjusted should the final quantities differ upon completion of the project. Measurement shall be based on the amount of work satisfactorily completed as determined by the City. Payment shall include full compensation for furnishing all materials, tools, equipment, labor, parts and other items necessary to mechanically clean the well.

ITEM 15: Chemical Cleaning

A. Description

This item shall include all materials, tools, equipment, labor, parts and other items necessary to chemically clean the well. See Section 2.12, "Chemical Cleaning", of the Technical Specifications.

B. Measurement and Payment

Chemical Cleaning shall be measured and paid per each chemical cleaning process completed at a single well. Although a quantity is given for this item for purposes of identifying the low bidder, the unit price bid shall not be adjusted should the final quantities differ upon completion of the project. Measurement shall be based on the amount of work completed as determined by the City. Payment shall include full compensation for furnishing all materials, tools, equipment, labor, parts and other items necessary to chemically clean the well.

ITEM 16: Well Disinfection

A. Description

This item shall include all materials, tools, equipment, labor, parts and other items necessary to disinfect the well. See Section 2.17, "Disinfect Well", of the Technical Specifications.

B. Measurement and Payment

Payment shall be at the unit price per each well disinfected and shall include full compensation for furnishing all labor, materials, tools, equipment and incidentals, and for doing all work involved in well disinfection in accordance with the Plans and these Special Provisions.

ITEM 17: Wastewater Treatment and Disposal

A. Description

This item shall include all materials, tools, equipment, labor, parts and other items necessary to treat and dispose of wastewater generated by the project. See Section 2.18, "Wastewater Treatment and Disposal", of the Technical Specifications.

B. Measurement and Payment

Wastewater Treatment and Disposal shall be measured and paid on the lump sum price bid. Measurement shall be based on the amount of work completed as determined by the

City. Payment shall include full compensation for furnishing all materials, tools, equipment, labor, parts and other items necessary for proper wastewater treatment and disposal in accordance with the Plans and these Special Provisions.

ITEM 18: Install New 8" Flow Meter

A. Description

The work to be performed for Items 18 includes furnishing and installing a new 8" diameter flow meter at each site per the manufacturer's recommendations, and as indicated in the Plans and these Special Provisions. This includes the flow tube, transmitter, grounding rings and all appurtenances as required for a complete installation. Conduit and conductors shall be paid for under Item 19.

B. Measurement and Payment

Payment shall be at the unit price per each and shall include full compensation for furnishing all labor, materials, tools, equipment and incidentals, and for doing all work involved in furnishing and installing each flow meter in accordance with the Plans and these Special Provisions.

ITEM 19: Electrical Improvements

A. Description

The work to be performed for this item includes but is not limited to demolition of existing electrical/pump buildings, furnishing and installing all necessary equipment and materials for the well head junction box, well tank hydropneumatic system, NEMA 4X enclosure, modifying the probe well, air compressors, air release and vacuum valves, instrumentation, chlorine detectors, pressure switch, pressure transmitter, pressure gauges, drawdown transducer, sounding tube, pull boxes, lighting fixtures, lighting poles, lighting pole foundations, conduits, conductors, and all electrical appurtenances at all well sites as indicated in the Plans and within these Special Provisions.

The City will supply the MCC for each well. The Contractor shall pickup each MCC from Consolidated Electrical Distributors, Inc. in Rancho Cordova, and transport the equipment to each well site. The Contractor shall install the MCC per the Plans, these Special Provisions, and the manufacturer's recommendations.

The Contractor shall make all connections to the MCC for the well pump and chlorine booster pump for each well. The Contractor shall complete all input and output connections to the PLC as shown in the Plans for each well.

B. Measurement and Payment

Payment shall be at the lump sum price bid and shall include full compensation for furnishing all labor, materials, tools, equipment and incidentals, and for doing all work involved in constructing the electrical improvements at each well site in accordance with the Plans and these Special Provisions.

ITEM 20: Install City Supplied Fluoride System

A. Description

The work to be performed for this item includes, but is not limited to, demolition of the existing fluoride system and furnishing and installing all necessary equipment and materials to install a new City supplied fluoride system, and all necessary appurtenances at each well site as indicated in the Plans and these Special Provisions.

The Contractor shall be responsible for making all of the electrical and water connections to the fluoride system as shown in the Plans. The Contractor shall make any necessary modifications to the existing water supply, electrical system (conduit, junction boxes, fans, lighting, electrical outlets), and chlorine system to accommodate the new fluoride system. The City will remove any hazardous materials within the existing chemical building.

B. Measurement and Payment

Payment shall be at the unit price per each and shall include full compensation for furnishing all labor, materials, tools, equipment and incidentals, and for doing all work involved in installing each new fluoride system at each well in accordance with the Plans and these Special Provisions.

ITEM 21: Chain Link Fencing and Gates

A. Description

The work to be performed for this item includes but is not limited to, demolition of existing fencing, gates, and footings, and installation of new eight feet tall chain link fencing and gates, fence slats, and all necessary appurtenances at each well site as indicated in the Plans and these Special Provisions.

B. Measurement and Payment

Payment shall be at the lump sum price bid and shall include full compensation for furnishing all labor, materials, tools, equipment and incidentals, and for doing all work involved in demolition and removal of the existing fencing and construction of new fencing at each well site in accordance with the Plans and these Special Provisions.

ITEM 22: Wellhead Construction

A. Description

The work to be performed for this item includes but is not limited to demolition of the existing wellhead, new wellhead construction, fabrication and installation of a new wellhead base plate and discharge head piping, and all appurtenances necessary for a complete installation at seven well sites as indicated in the Plans and these Special Provisions.

Wells 94, 122, and 133 require installation of new 8” steel (Schedule 30, A53, Grade B) discharge pipe and fittings from the wellhead to the hydropneumatic tank and shall be included in this item. **The existing submersible pump and motor at Well 129 shall be returned to the City after removal for well cleaning.**

B. Measurement and Payment

Payment shall be at the unit price per each and shall include full compensation for furnishing all labor, materials, tools, equipment and incidentals, and for doing all work involved in constructing and installing a new functional wellhead at each well in accordance with the Plans and these Special Provisions.

ITEM 23: 50 Horsepower Submersible Pump Installation

ITEM 24: 75 Horsepower Submersible Pump Installation

ITEM 25: 100 Horsepower Submersible Pump Installation

A. Description

The work to be performed for Items 23 through 25 includes but is not limited to purchase and installation of a new submersible pump and all appurtenances necessary for a complete installation at each well site as indicated in the Plans and these Special Provisions.

B. Measurement and Payment

Payment shall be at the unit price per each site installation and shall include full compensation for furnishing all labor, materials, tools, equipment and incidentals, and for doing all work involved in installing each new submersible pump at each well site as directed by the Engineer, and in accordance with the Plans and these Special Provisions.

ITEM 26: 6" Pump Column Piping

ITEM 27: 8" Pump Column Piping

ITEM 28: 10" Pump Column Piping

A. Description

The work to be performed for Items 26 through 28 includes installation of new 6, 8, or 10-inch diameter pump column piping (Schedule 30, A53, Grade B, tapered thread) and all appurtenances necessary at each well site as directed by the Engineer and as indicated in the Plans and these Special Provisions.

B. Measurement and Payment

Payment shall be at the unit price bid per linear foot of piping installed and shall include full compensation for furnishing all labor, materials, tools, equipment and incidentals, and for doing all work involved in installing new pump column piping at each well in accordance with the Plans and these Special Provisions. Although a quantity is given for this item for purposes of identifying the low bidder, the quantity to be installed will depend on the final pump depth as determined from post cleaning test pumping of each well. The unit price will not be adjusted regardless of the quantity installed.

ITEM 29: Site Paving

A. Description

The work to be performed for this item includes, but is not limited to, demolition and removal of existing concrete and pavement and installation of new asphalt associated with the removal of the electrical buildings at Well 120, 122, 126, and 133, the asphalt replacement at Well 133, and the chemical shed swap between Well 107 and Well 122, as indicated in the Plans and these Special Provisions.

B. Measurement and Payment

Payment shall be at the unit price bid per square foot of paving installed and shall include full compensation for furnishing all labor, materials, tools, equipment and incidentals, and for doing all work involved in the demolition and removal of existing pavement and concrete and installation of new asphalt in accordance with the Plans and these Special Provisions.

ITEM 30: Sand Pit

A. Description

The work to be performed for this item includes, but is not limited to, demolition and removal of existing sand pits at Well 129 and Well 133, and installation of new sand pits at Well 94, Well 129, and Well 133, drainage pipeline work around the new sand pits, connection to the existing storm drainage system, removal of existing tank drainage pipes and installation of new tank drainage pipe and valves, pipe supports, and conform paving around the new sand pit and under the tank at Well 94 as indicated in the Plans and these Special Provisions.

B. Measurement and Payment

Payment shall be at the unit price bid per each and shall include full compensation for furnishing all labor, materials, tools, equipment and incidentals, and for doing all work involved in the demolition and removal of existing sand pits and the installation of new sand pits in accordance with the Plans and these Special Provisions.

ITEM 31: 6” Sewer Laterals

A. Description

The work to be performed for this item includes, but is not limited to, trenching, backfilling, compaction testing, repaving trenches, sidewalk and curb & gutter replacement, landscape restoration, pipe, cleanouts, inside drop connections, tying into existing sewer facilities, associated fittings, and tap fees for the installation of new 6” sewer laterals at each well site, as indicated in the Plans and these Special Provisions.

B. Measurement and Payment

Payment shall be at the unit price bid per lineal foot of sewer pipe installed and shall include full compensation for furnishing all labor, materials, tools, equipment and incidentals, and for doing all work involved in the installation of new sewer laterals at each well site in accordance with the Plans and these Special Provisions.

ITEM 32: Sewer Manhole

A. Description

The work to be performed for this item includes, but is not limited to, trenching, backfilling, compaction testing, repaving trenches, landscape restoration, manhole structure, temporary sewer bypass, intertying to existing and new sewer facilities, and associated fittings and concrete for the installation of a new sewer manhole, as indicated in the Plans and these Special Provisions.

B. Measurement and Payment

Payment shall be at the unit price bid per each and shall include full compensation for furnishing all labor, materials, tools, equipment and incidentals, and for doing all work involved in the installation of a sewer manhole at Well 129 in accordance with the Plans and these Special Provisions.

**** End of Section ****

ATTACHMENT A

Sanitary District Wastewater Discharge Permit

REGIONALSAN
TAKING THE WASTE OUT OF WATER
Sacramento Regional County Sanitation District

Main Office
10060 Goethe Road
Sacramento, CA 95827-3553
Tel: 916.876.6000
Fax: 916.876.6160

Treatment Plant
8521 Laguna Station Road
Elk Grove, CA 95758-9550
Tel: 916.875.9000
Fax: 916.875.9068

Board of Directors
Representing:
County of Sacramento
County of Yolo
City of Citrus Heights
City of Elk Grove
City of Folsom
City of Rancho Cordova
City of Sacramento
City of West Sacramento

Prabhakar Somavarapu
District Engineer

Ruben Robles
Director of Operations

Christoph Dobson
Director of Policy & Planning

Karen Stoyanowski
Director of Internal Services

Joseph Maestretti
Chief Financial Officer

Claudia Goss
Public Affairs Manager

www.srcsd.com

Printed on Recycled Paper

September 17, 2014

City of Sacramento, Department of Utilities
1395 35th Avenue
Sacramento, CA 95822
Attn: Megan Thomas

SUBJECT: TEMPORARY DISCHARGE PERMIT TDP-14029

Enclosed is a temporary wastewater discharge permit from the Sacramento Regional County Sanitation District (Regional San). The permit is effective from November 1, 2014 to October 31, 2015. A copy of this permit should be presented if requested during disposal and retained in your files for three years.

The subject permit covers the discharge of approximately 3,200,000 gallons of wastewater associated with eight drinking water well rehabilitation activities in Sacramento as described in the application dated July 31, 2014.

The enclosed permit has conditions in it that may require your immediate attention, including the following:

- a requirement to sample wastewater for specific constituents as described in Requirement #3
- a discharge rate limitation specific for each location
- a requirement to provide notification of the exact date(s) of discharge and volume of wastewater disposed after completion of the discharge or within two weeks after permit expiration.

The fee for this permit is $3,852.80, which covers Regional San's cost of administration of this permit, two capacity evaluation fees, and disposal of the requested 3,200,000 gallons. Any additional volumes discharged will be invoiced after submittal of the closure report when a more accurate discharge amount is known. Please refer to the attached invoice for payment details.

If you have any questions or comments, please contact me at (916) 876-6522 or rynasS@sacsewer.com.

Respectfully,

Sabina Rynas

Sabina Rynas
Environmental Specialist
Wastewater Source Control Section

SACRAMENTO REGIONAL COUNTY SANITATION DISTRICT (REGIONAL SAN)

TEMPORARY WASTEWATER DISCHARGE PERMIT

Permit No:	TDP-14029	**Effective Date:**	November 1, 2014
Company/ Discharge Owner:	City of Sacramento, Department of Utilities		
Site Name/Address:	Wells in Sacramento discharging to SASD sewer system: • Well 94: 0 Northgate Boulevard (within 3315 Northgate Boulevard), APN 250-0520-006 • Well 107: 7907 Grandstaff Drive, APN 117-0021-023 Wells in Sacramento discharging to City of Sacramento sewer system: • Well 120: 2940 Branch Street, APN 265-0121-024 • Well 122: 0 Juliesse Avenue (adjacent to 2986 Del Paso Boulevard), APN 265-0191-002 • Well 126: 0 Rivera Drive (adjacent to 1324 Rivera Drive), APN 251-0260-005 • Well 129: 0 Harris Avenue (adjacent to 811 Grant Avenue), APN 251-0051-002 • Well 133: behind 4600 Pell Drive, APN 237-0022-036 • Well 138: 4020 Fell Street, APN 237-0311-011		
Contact Person:	Megan Thomas	**Phone:**	(916) 808-1729

City of Sacramento, Department of Utilities is hereby authorized to use the public sewer system, subject to the limitations and requirements as stated below or additional limitations or requirements as circumstances may require. This discharge must cease if the applicant is so directed by Regional San.

Limitations and Requirements:

1. Disposal of waste is limited to discharge of approximately 3,200,000 gallons of wastewater associated with eight drinking water well rehabilitation activities in Sacramento as described in the application dated July 31, 2014. Each well will be discharging for up to 4 weeks; 6 hours each day for 5 days a week.
2. Well-specific discharge rate and location requirements:

   Wells: 120, 122, 126, 129, 133, and 138 - all wastewater must be discharged to a designated manhole at a specific rate. Both manhole and rate were approved by the City of Sacramento Associate Civil Engineer Humberto Amador in the Approval Email dated January 22, 2014, and confirmed on July 31, 2014.

   Well 94 - all wastewater must be discharged to SASD manhole #350-149-1048. The discharge rate is limited to a maximum of 300 gallons per minute.

   Well 107 - all wastewater must be discharged to SASD manhole # 292-161-1037. The discharge rate is limited to a maximum of 100 gallons per minute.

   The discharger is responsible for reducing the discharge flow rate to avoid a surcharged hydraulic condition in the discharge manhole. A surcharged condition exists when the water surface level is higher than the top of the pipes that are connected to the manhole.

3. Wastewater generated from the acid-cleaning phase of each well must be tested for total manganese, arsenic, and barium.

   Each sample must be representative of the discharge. All metal samples must be field-preserved as required by method, and acid-digested prior to analysis.

   A full laboratory report with QA/QC should be submitted to Regional San as soon as available and no later than 30 days after the sample collection date.
4. Wastewater from each phase of the cleaning must be tested for pH. If pH is below 6 or above 9.5, 24-hour pre-notification is required. pH results must be submitted with the closure report.
5. The pH of the wastewater discharged to the sewer must be 5 or greater and less than 12.5.
6. A **closure report** must be submitted to this office at the completion of all discharge activities and no later than November 15, 2015. The report must include daily date(s) and corresponding volumes of the discharge.
7. Wastewater must be treated to eliminate silt and sand that does not remain suspended prior to discharge into the sewer.
8. An in-line volumetric flow meter must be installed in the discharge line to measure the rate of discharge (gpm) and total volume (gallons) discharged to sewer.
9. The discharge hose must be placed at the bottom of the manhole and in the direction of flow to minimize scouring and other damage to manholes associated with high-pressure discharges.
10. No cross connection between domestic water supply and sewer conduits may occur unless there is provided a backflow prevention device approved for the potential hazard. See Uniform Plumbing Code 602 and 603 for approved backflow devices.

In addition to the above limitations and requirements, the permittee is responsible for determining if any other permits are required for activities performed under this permit including, but not limited to, an encroachment permit.

The permittee assumes the responsibility for assuring that all proper safety procedures are followed concerning the opening of manhole lids. Responsibilities include, but are not limited to, testing the atmosphere in the sewer system before opening the manhole lid, directing traffic, assuring that all personnel are equipped with the proper personal protective equipment and clothing, and securely replacing the manhole lid. Under no circumstances will a person enter the sewer manhole.

The permittee must comply, at a minimum, with all applicable standards outlined by the State of California Department of Industrial Relations Division of Occupational Safety and Health, better known as Cal/OSHA, and any additional Federal, State, and local rules, regulations, and standards for workplace safety relating to the permit activity.

Strict adherence to these conditions is required. Failure to comply may result in sanitary sewer overflows for which the permittee will be held directly responsible.

THIS PERMIT EXPIRES OCTOBER 31, 2015.

TDP-14029 (City of Sacramento, DOU)

Sacramento Regional County Sanitation District

By: Linda Stevens

Linda Stevens
Environmental Program Manager
Wastewater Source Control Section

TDP-14029 (City of Sacramento, DOU)

ATTACHMENT B

Project Task Completion Form

Item	Task	Completion Date							
		Well 94	Well 107	Well 120	Well 122	Well 126	Well 129	Well 133	Well 138
A	Pre-Mobilization Site Video								
B	Initial Video Survey								
C	Pre-Cleaning Test Pumping								
D	Pre-Cleaning Spinner Log								
E	Traffic Control								
F	Brushing & Sediment Removal								
G	Post-Brushing Video Survey								
H	Additional Brushing & Sediment Removal								
I	Additional Post-Brushing Video								
J	Screen & Casing Repair								
K	Agitating Near-Well Environment								
L	Mechanical Cleaning								
M	Chemical Cleaning								
N	Post-Cleaning Video Survey								
O	Additional Mechanical Cleaning								
P	Additional Chemical Cleaning								
Q	Additional Post-Cleaning Video								
R	Post-Cleaning Spinner Logging								
S	Deviation Survey								
T	Post-Cleaning Test Pumping								
U	Disinfect Well								
V	Wastewater Treatment & Disposal								
W	Waste Solids Disposal								

ATTACHMENT C

Daily Field Log

Daily Field Log

Well: **Owner:** **Page:**

Date: **Day: M T W Th F**

Operator:

Activity	Start Time	End Time	Well Discharge				Materials Used
			Totalizer Start (gal)	Totalizer End (gal)	Imhoff Cone (ml)	Visual Appearance	
Phase 3: Rehabilitation							
Pre-Mobilization Site Video							
Mobilization, Site Setup, & Demobilization							
Pre-Cleaning Test Pumping							
Pre-Cleaning Spinner Log							
Traffic Control							
Brushing & Sediment Removal							
Post-Brushing Video							
Additional Brushing & Sediment Removal							
Additional Post-Brushing Video							
Screen & Casing Repair							
Agitating Near-Well Environment							
Mechanical Cleaning							
Chemical Cleaning							
Post-Cleaning Video							
Additional Mechanical Cleaning							
Additional Chemical Cleaning							
Additional Post-Cleaning Video							
Post-Cleaning Spinner Log							
Deviation Survey							
Post-Cleaning Test Pumping							
Disinfect Well							
Wastewater Treatment & Disposal							
Waste Solids Disposal							
Other							

Owner Representative **Date** **Contractor Representative** **Date**

ATTACHMENT D

Neighborhood Notification Letter

Dear Resident,

The City of Sacramento, Department of Utilities, awarded a construction contract to our firm, (Contractor) to perform a well rehabilitation project in your neighborhood.

During the course of the project, temporary sidewalk and street detours adjacent to the well site may occur. In addition, on-street parking may be temporarily unavailable to accommodate traffic and construction work. Our work hours are typically between 7 AM to 6 PM.

General public and construction crew safety is of primary concern to us and we remind you to observe the construction signs. We realize this project may be a temporary inconvenience and we shall strive to minimize the impacts to the residents.

If you have any questions or problems, please contact any one of the project representatives listed below:

Contractor Superintendent: Name, Phone Number
City Inspector: Name, Phone Number
City Project Manager: Name, Phone Number

Construction work is scheduled to begin in your neighborhood on _____. The anticipated project completion date is _____.

Thank you for your cooperation on this important project.

Sincerely,
Contractor Representative

cc: Project Manager, Utilities
Jessica Hess, Utilities
City Council Member's Assistant

Back to Report Table of Contents

CITY OF SACRAMENTO

IMPROVEMENT PLANS FOR

WELLS REHABILITATION PROJECT PHASE 3

APPROVED BY: TOM CARNEY — DATE
WATER & SEWER SUPERVISER

APPROVED BY: DANIEL SHERRY, R.C.E. 53638 — DATE
SUPERVISING ENGINEER

APPROVED BY: DAVID K. HANSEN, R.E.E. 12512 — DATE
SUPERVISING ENGINNER

SUBMITTED BY: MEGAN E. THOMAS, R.C.E. 66780 — DATE
PROJECT ENGINEER

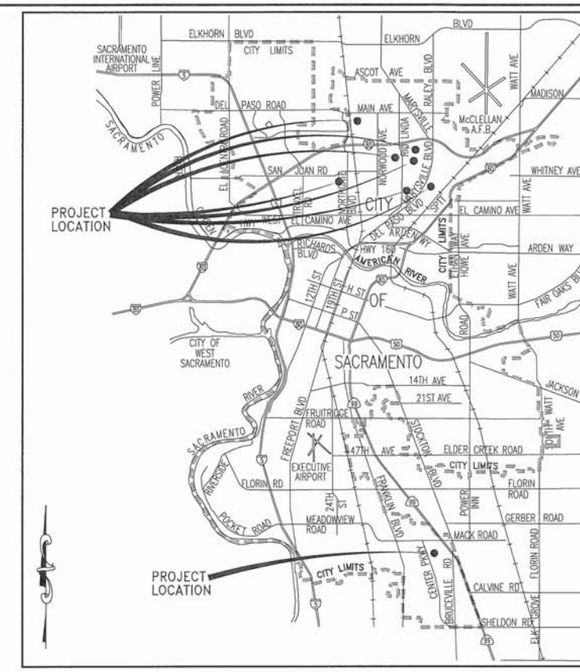

VICINITY MAP

INDEX OF SHEETS

G-1 COVER SHEET
E-1 ELECTRICAL SYMBOLS, ABBREVIATIONS AND GENERAL NOTES
E-2 TYPICAL WELL SINGLE LINE DIAGRAM
E-3 TYPICAL WELL MCC ELEVATION AND PLAN
E-4 TYPICAL WELL PUMP MOTOR CONTROL DIAGRAM
E-5 TYPICAL CHLORINE BOOSTER PUMP CONTROL DIAGRAM
E-6 TYPICAL WELL PLC ELEVATION DIAGRAM
E-7 TYPICAL WELL PLC POWER DISTRIBUTION DIAGRAM
E-8 TYPICAL WELL PLC DIGITAL INPUTS DIAGRAM
E-9 TYPICAL WELL PLC DIGITAL OUTPUTS DIAGRAM
E-10 TYPICAL WELL PLC ANALOG INPUTS DIAGRAM
E-11 TYPICAL WELL PLC ANALOG OUTPUTS DIAGRAM
E-12 TYPICAL WELL PLC COMMUNICATIONS DIAGRAM
E-13 WELL 94 ELECTRICAL SITE PLAN
E-14 WELL 107 ELECTRICAL SITE PLAN
E-15 WELL 120 ELECTRICAL SITE PLAN
E-16 WELL 122 ELECTRICAL SITE PLAN
E-17 WELL 126 ELECTRICAL SITE PLAN
E-18 WELL 129 ELECTRICAL SITE PLAN
E-19 WELL 133 ELECTRICAL SITE PLAN
E-20 WELL 138 ELECTRICAL SITE PLAN
E-21 CONDUIT, LIGHTING PANEL, AND LIGHTING SCHEDULES
E-22 ELECTRICAL STANDARD DETAILS
E-23 ELECTRICAL STANDARD DETAILS
E-24 ELECTRICAL STANDARD DETAILS
E-25 ELECTRICAL STANDARD DETAILS
E-26 ELECTRICAL STANDARD DETAILS
E-27 ELECTRICAL STANDARD DETAILS
C-1 WELL 94 DEMOLITION PLAN
C-2 WELL 94 CIVIL PLAN
C-3 WELL 107 DEMOLITION PLAN
C-4 WELL 107 CIVIL PLAN
C-5 WELL 120 DEMOLITION PLAN
C-6 WELL 120 CIVIL PLAN
C-7 WELL 122 DEMOLITION PLAN
C-8 WELL 122 CIVIL PLAN
C-9 WELL 126 DEMOLITION PLAN
C-10 WELL 126 CIVIL PLAN
C-11 WELL 129 DEMOLITION PLAN
C-12 WELL 129 CIVIL PLAN
C-13 WELL 133 DEMOLITION PLAN
C-14 WELL 133 CIVIL PLAN
C-15 WELL 138 DEMOLITION PLAN
C-16 WELL 138 CIVIL PLAN
C-17 SWITCHGEAR COVER
C-18 SWITCHGEAR COVER DETAILS
C-19 SWITCHGEAR COVER SIGNAGE, AND CHEMICAL FEED DETAILS
C-20 WELL HEAD AND FENCE DETAIL
C-21 SAND PIT DETAIL
C-22 CITY SEWER DETAILS
C-23 COUNTY SEWER PLAN – WELL 94
C-24 COUNTY SEWER PLAN – WELL 107
C-25 COUNTY SEWER NOTES
C-26 COUNTY SEWER DETAILS AND SEWER LATERAL CHART

NOTES:

1. CONTRACTOR SHALL FOLLOW ALL REQUIREMENTS STATED WITHIN THE SRCSD WASTEWATER DISCHARGE PERMIT ISSUED TO THE CITY, SEE SPECIFICATIONS.

SACRAMENTO AREA SEWER DISTRICT

PLAN CHECKER — DATE 8-29-14

WELL REHABILITATION PROJECT PHASE 3
R:\Civil3D Projects\Z14110105_Well-Rehab_Ph3\Dwgs

PN: Z14110104 WELL REHABILITATION PROJECT PHASE 3

PN: Z14110105

REVISIONS			
NO.	DESCRIPTION	DATE	BY

BENCH MARK — DESCRIPTION: — ELEV.

FIELD BOOK — SCALE: H: N.A. V: N.A.

1" — ON ORIGINAL SCALE DRAWING ADJUST SCALED DIMENSIONS IF THIS DOES NOT SCALE AT 1"

CITY OF SACRAMENTO
DEPARTMENT OF UTILITIES

DRAWN BY: A. VELAZQUEZ — DATE: SEP 2014
DESIGNED BY: M. THOMAS — R.C.E. NO. C66780 — DATE: SEP 2014
CHECKED BY: D. SHERRY — R.C.E. NO. C63770 — DATE: SEP 2014

REGISTERED PROFESSIONAL ENGINEER — MEGAN ELIZABETH THOMAS — No. C66780 — Exp. 09/30/14 — CIVIL — STATE OF CALIFORNIA

IMPROVEMENT PLANS FOR:
WELL REHABILITATION PROJECT PHASE 3

COVER SHEET

GIS GRID NO. — GOT GIS?
PN: Z14110105
DWG. NO. G-1
SHEET 1 OF 54

ABBREVIATION	DESCRIPTION	ABBREVIATION	DESCRIPTION
(E)	EXISTING	ma	MILLIAMPERE
(N)	NEW	MCC	MOTOR CONTROL CENTER
3-PH	THREE PHASE	NEMA	NATIONAL ELECTRICAL MANUFACTURERS ASSOCIATION
3-W	THREE WIRE	NEUT	NEUTRAL
A	AMP	NON-SH	NON-SHIELDED
AB	ALLEN BRADLEY	No.	NUMBER
AC	ALTERNATING CURRENT	OL	OVERLOAD
AICS	AVAILABLE INTERRUPTING CURRENT SYMMETRICAL	P	POLE
AM	AMP METER	PB	PULLBOX
ATS	AUTOMATIC TRANSFER SWITCH	PDS	PRESSURE DIFFERENTIAL SWITCH
AUX	AUXILIARY	PFR	PLANT FAILURE RELAY
AWG	AMERICAN WIRE GUAGE	PH or ø	PHASE
BCW	BARE COPPER WIRE	PLC	PROGRAMMABLE LOGIC CONTROLLER
BLDG	BUILDING	PMP	PUMP
C	CONDUIT	PNL	PANEL
CO	SEWER CLEANOUT	PR	PAIR
CAB	CABINET	PSI	POUNDS PER SQUARE INCH
CKT	CIRCUIT	PTT	PUSH TO TEST
CLF	CURRENT LIMITING FUSE	PVC	POLYVINYL CHLORIDE
CNTL	CONTROL	PWR	POWER
CONN	CONNECTION	RECEPT	RECEPTACLE
CPT	CONTROL POWER TRANSFORMER	RVNR	REDUCED VOLTAGE NON REVERSING
CR_	CONTROL RELAY (i.e. CR1)	RGS	RIGID GALVANIZED STEEL CONDUIT
DIFF	DIFFERENTIAL	RQMTS	REQUIREMENTS
DS	DOOR SWITCH	SCFH	STANDARD CUBIC FOOT per HOUR
EG	ENGINE GENERATOR	SCH	SCHEDULE
ENG	ENGINE	SEC	SECOND
EQUIP	EQUIPMENT	SH	SHIELDED (CABLE)
ETM	ELAPSED TIME METER	SHT	SHEET
FAE	FOUL AIR EXHAUST	SMUD	SACRAMENTO MUNICIPAL UTILITY DISTRICT
FVNR	FULL VOLTAGE NON REVERSING	SS	SURGE SUPPRESSOR
G	GROUND WIRE	SW	SWITCH
GEN	GENERATOR	SWGR	SWITCHGEAR
GFCI	GROUND FAULT CIRCUIT INTERRUPTER	TD_ or TDR	TIME DELAY RELAY
GFP	GROUND FAULT PROTECTION	TERM	TERMINAL
GND	GROUND(ING)	TRANSF. or TXF	TRANSFORMER
H & V	HEATING AND VENTILATION	TS	TEMPERATURE SWITCH
HI	HIGH	TYP	TYPICAL
HTR	HEATER	UPS	UNINTERRUPTABLE POWER SUPPLY
HOA	HAND-OFF-AUTO	V	VOLT
HP	HORSEPOWER	VA	VOLT-AMP
IC	ISOLATION CONTACTOR	VAC	VOLTS - ALTERNATING CURRENT
JB	JUNCTION BOX	VDC	VOLTS - DIRECT CURRENT
kcM (or MCM)	1000 CIRCULAR MILS	VFD	VARIABLE FREQUENCY DRIVE
KVA	KILOVOLT AMPERES	VM	VOLT METER
KW	KILOWATT	W	WATT or WIRE
L	LINE	W/	WITH
LO	LOW	WP	WEATHER PROOF
LOS	LOCK OUT SWITCH	XDUCER	TRANSDUCER
LTG	LIGHTING		

GENERAL NOTES:

1. PLAN AND ELEVATION DRAWINGS ARE SCHEMATIC IN FORM.
2. PLAN AND ELEVATION DRAWINGS ILLUSTRATE APPROXIMATE LOCATIONS AND LAYOUT OF EQUIPMENT. THE CONTRACTOR SHALL DETERMINE ACTUAL LOCATIONS OF EQUIPMENT AND QUANTITIES OF MATERIALS FROM FIELD MEASUREMENTS.
3. CONDUIT ROUTING IS SHOWN DIAGRAMATICALLY AND THE CONTRACTOR SHALL INSTALL THE CONDUIT SYSTEMS CONSISTENT WITH FIELD CONDITIONS.
4. CONDUIT TYPE SHALL BE AS FOLLOWS UNLESS OTHERWISE NOTED,
   ALL ACCEPTABLE CONDUIT MATERIALS ARE SPECIFIED IN SPECIFICATION SECTION 16110, 2.02 A.
   EXPOSED CONDUIT (INDOOR AND OUTDOOR) SHALL BE RIGID GALVANIZED STEEL (RGS).
   CONDUIT IN CONCRETE SLAB SHALL BE RIGID GALVANIZED STEEL.
   UNDERGROUND CONDUIT SHALL BE RGS PVC COATED CONDUIT WHERE CONDUIT IS DIRECTLY IN CONTACT WITH THE EARTH.
   OR SCHEDULE 40 PVC CONDUIT WITH RED CONCRETE ENCASEMENT MINIMUM OF 4" ALL AROUND FOR HORIZONTAL RUNS ONLY. (SEE NOTE 5)
   UCONDUIT IN DUCT BANK SHALL BE SCH. 40 PVC CONDUIT WITH RED CONCRETE ENCASEMENT MIN. OF 4" ALL AROUND FOR HORIZONTAL RUNS ONLY. (SEE NOTE 5)
   VERTICAL SWEEP AND RISER FROM BURIED RUNS SHALL BE PVC COATED RGS CONDUIT FROM UNDERGROUND RUNS 5' PRIOR TO RISER AND 6" ABOVE FINISHED GRADE.
   BOTTOM ENTRANCE OF SWITCHGEAR, DISTRIBUTION PANEL, MCC, ETC., SHALL BE PVC COATED RGS.
   SIDE OR TOP ENTRANCE OF SWITCHGEAR, DISTRIBUTION PANEL, MCC, ETC., SHALL BE RGS.
   CONDUIT EXOSED TO CORROSIVE ENVIRONMENT (SEWER WET WELL, EXAMPLE) SHALL BE PVC COATED RGS.
   PRIMARY AND SECONDARY OF THE SMUD TRANSFORMER SHALL BE PER SMUD STANDARD SPECIFICATIONS.
   BOTTOM ENTRANCE FROM SMUD TRANSFORMER TO CITY MAIN SWITCHGEAR SHALL BE PVC CONDUIT, WITH CONCRETE ENCASEMENT MINIMUM OF 4" ALL AROUND.
   CONNECTING RIGID CONDUIT SYSTEM TO UTILIZATION EQUIPMENT SHALL BE LIQUID-TIGHT FLEXIBLE METAL CONDUIT.
   ANY SITUATION NOT COVERED ABOVE SHALL BE PVC COATED RGS.
5. BURIED CONDUITS SHALL BE A MINIMUM OF 24 INCHES BELOW GRADE ON RUNS NOT EXPOSED TO VEHICULAR TRAFFIC AND A MINIMUM OF 36 INCHES BELOW GRADE WHEN EXPOSED TO VEHICULAR TRAFFIC. BURIED CONDUITS SHALL BE EMBEDDED IN CONCRETE WITH 4" MINIMUM CONCRETE COVERAGE AROUND CONDUIT. BACKFILL SHALL BE COMPACTED TO 95%. ROADBED SURFACES DISTRUBED DURING TRENCHING SHALL BE REPAIRED TO PRE-CONSTRUCTION CONDITION AFTER INSTALLATION IS COMPLETE. CONTRACTOR SHALL PLACE A 6" WIDE ELECTRICAL WARNING TAPE IN ALL TRENCHES 12" AND ABOVE CONCRETE.
6. CONDUIT AND CABLE DESIGNATIONS ARE AS FOLLOWS (TYPICAL):
   1"C, 3-1PR#16, SH=1" CONDUIT WITH THREE INDIVIDUAL SHIELDED SINGLE PAIR #16 AWG CABLES.
   3/4"C, 2#10 & #12G=3/4" CONDUIT WITH TWO #10 CONDUCTORS AND A #12 CONDUCTOR GROUND.
7. CONTRACTOR SHALL FOLLOW ALL REQUIREMENTS STATED WITHIN SRCSD WASTEWATER DISCHARGE PERMIT ISSUED TO THE CITY, SEE SPECIFICATIONS.

SYMBOL	DESCRIPTION	SYMBOL	DESCRIPTION
	TRANSFORMER		NORMALLY CLOSED CONTACT
600 MCP LSIG 3P	LOW VOLTAGE CIRCUIT BREAKER OR MOTOR CIRCUIT PROTECTOR 600 = SIZE, 3P = 3 POLE MCP = MOTOR CIRCUIT PROTECTOR LSIG = LONG TIME, SHORT TIME, INSTANTANEOUS & GROUND (CHARACTERISTICS)		NORMALLY OPEN CONTACT
	FUSE		NORMALLY CLOSED LIMIT SWITCH
	DISCONNECT SWITCH		
	CURRENT TRANSFORMER		TIME DELAY CONTACT - (TDC) CLOSE AFTER ENERGIZE & DELAY
	POTENTIAL TRANSFORMER OR CONTROL POWER TRANSFORMER		TIME DELAY CONTACT - (TDO) OPEN AFTER ENERGIZE & DELAY
PFR PFR	POWER FAILURE RELAY		NORMALLY OPEN PUSH BUTTON
VM VS	VOLTMETER & VOLTMETER SWITCH		NORMALLY CLOSED PUSH BUTTON
AM AS	AMMETER & AMMETER SWITCH		CONTROL SWITCH
X	CONTACTOR COIL: M = MAIN, F = FORWARD, R = REVERSE OR RUN, S = START		PRESSURE SWITCH - NORMALLY CLOSED OPEN ON RISE IN PRESSURE TO SETPOINT
SOL	SOLENOID VALVE COIL		PRESSURE SWITCH - NORMALLY OPEN CLOSE ON RISE IN PRESSURE TO SETPOINT
	THERMAL OVERLOAD RELAY		FLOAT SWITCH - NORMALLY OPEN CLOSE ON RISE IN LEVEL TO SETPOINT
XXX	MOTOR (HP WRITTEN WITHIN)	PTT R	PUSH-TO-TEST INDICATING LIGHT R = RED, G = GREEN, W = WHITE, A = AMBER
M	ELECTRICAL CONNECTION TO MECHANICAL EQUIPMENT (PLAN)		DISCONNECT SWITCH
J 1	JUNCTION BOX SIZE AND TYPE AS SHOWN ON PLANS NUMBER CORRESPONDS WITH CONDUIT SCHEDULE	CRX	CONTROL RELAY (X REFERENCE NUMBER) DPDT=2 POLE DOUBLE THROW, 3PDT=3 POLE DOUBLE THROW
DS	DOOR SWITCH	TDX	TIME DELAY RELAY (X REFERENCE NO) TDPU=DELAY ON PICK UP, TDDO=DELAY ON DROP OUT
CS	MANUAL CONTROL STATION	LSX	LEVEL SWITCH (X: L=LO, H=HI, 1,2 ETC = SWITCH REF No.)
GFCI WP	DUPLEX RECEPTACLE WP=WEATHERPROOF BOX: GFCI=GROUND FAULT INTERRUPTER TYPE	ETM	ELAPSED TIME METER
	POWER OUTLET SIZE AND TYPE AS SHOWN ON PLANS		CONNECTION NODE
	FLOODLIGHT		RESISTOR/HEATER
B	BUBBLER TUBE EMMITER LOCATION		TERMINAL BLOCK POINT FOR FIELD TERMINATIONS
U	ULTRASONIC LEVEL SENSOR LOCATION		TERMINATION IN MCC
F	FLOAT LOCATION		TERMINATION IN CONTROL PANEL
	GROUND		TERMINATION IN RTU OR PLC
	GROUND ROD & WELL		GROUND ROD INSERT

PN: Z14110105 WELL REHABILITATION PROJECT PHASE 3 R:\Civil3D Projects\Z14110105_Well-Rehab_Ph3\Dwgs

PN: Z14110104 WELL REHABILITATION PROJECT PHASE 3

REVISIONS			
NO.	DESCRIPTION	DATE	BY

BENCH MARK ELEV. _____
DESCRIPTION:

FIELD BOOK
SCALE:
H: N.A.
V: N.A.

1"
ON ORIGINAL SCALE DRAWING ADJUST SCALED DIMENSIONS IF THIS DOES NOT SCALE AT 1"

CITY OF SACRAMENTO
DEPARTMENT OF UTILITIES

DRAWN BY: E. SALCEDO DATE: SEP 2014
DESIGNED BY: P. BARNES R.C.E. NO. E14584 DATE: SEP 2014
CHECKED BY: D. HANSEN R.C.E. NO. E12512 DATE: SEP 2014

REGISTERED PROFESSIONAL ENGINEER PAUL R. BARNES No.E15329 Exp.6/30/15 ELECTRICAL STATE OF CALIFORNIA

IMPROVEMENT PLANS FOR:
WELL REHABILITATION PROJECT PHASE 3

ELECTRICAL SYMBOLS, ABBREVIATIONS AND GENERAL NOTES

GIS GRID NO. GOT G3
PN: Z14110105
DWG. NO. E-1
SHEET 2 OF 54

NOTES:

1. THIS IS A TYPICAL SINGLE LINE DIAGRAM FOR ALL EIGHT CITY WELLS.
2. THE CITY WILL PROVIDE THE MCCs, GENERATOR RECEPTACLES, AND UTILITY METERS FOR THIS WELL REHAB PROJECT. THE CONTRACTOR SHALL TRANSPORT THIS EQUIPMENT FROM CED TO THE JOB SITES AND INSTALL THIS EQUIPMENT PER PLANS.
3. THE CITY WILL PROVIDE EITHER A 100 A OR 200 A GENERATOR RECEPTACLE FOR EACH WELL. CONTRACTOR SHALL INSTALL THE 200 A GEN. RECEPTACLE FOR THOSE WELLS THAT CONTAIN A 75hp, 100hp , OR 150hp PUMP, FOR THOSE WELLS CONTAINING A 40hp OR 50hp PUMP THE CONTRACTOR SHALL INSTALL THE 100 A GENERATOR RECEPTACLE. MOUNT THESE RECEPTACLES TO THE SWITCHGEAR COVER USING GALVANIZED HARDWARE.

* DEPENDENT UPON SIZE OF GENERATOR RECEPTACLE, SEE CONDUIT SCHEDULE.
** DEPENDENT UPON SIZE OF THE PUMP, SEE CONDUIT SCHEDULE.

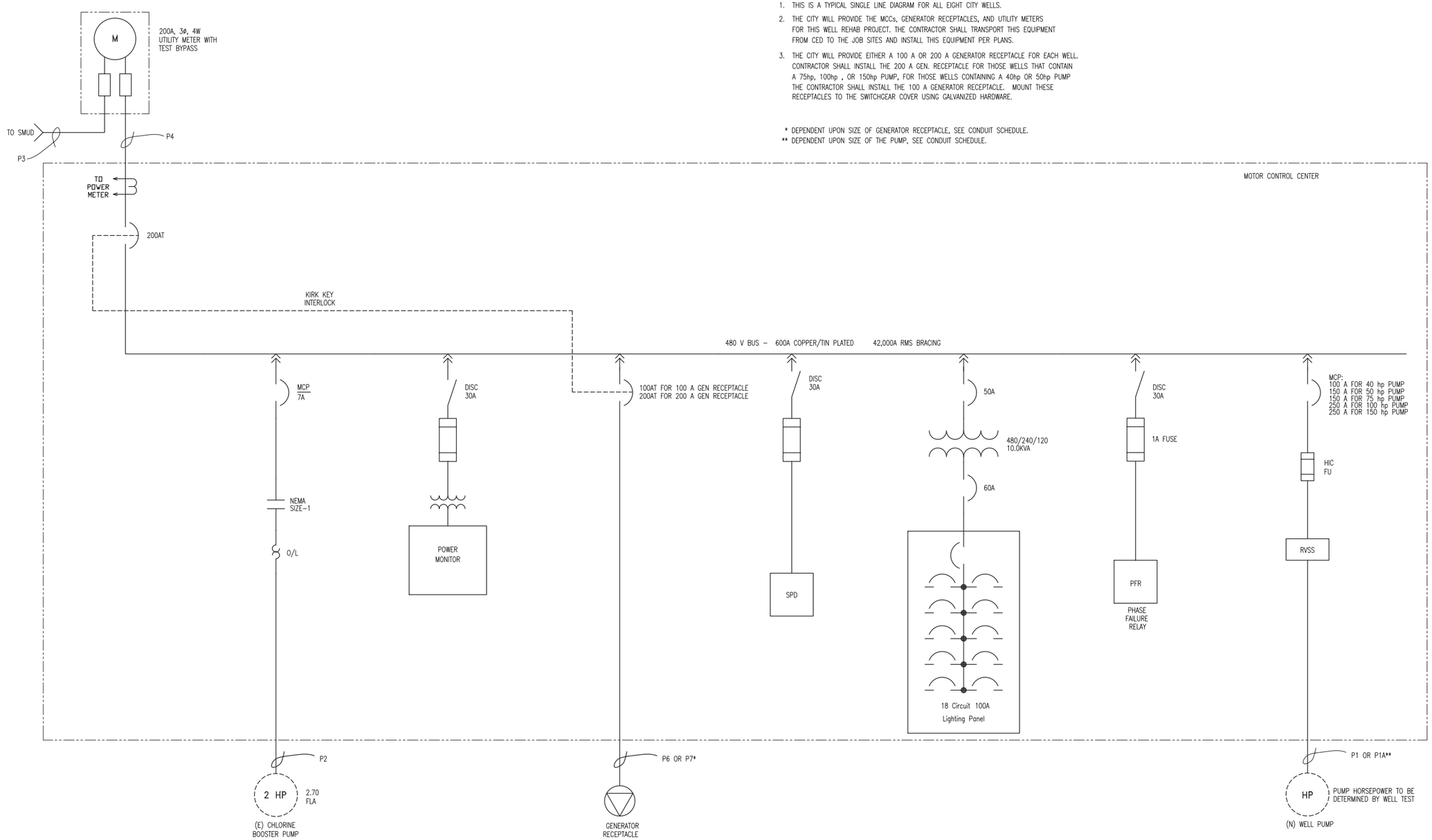

WELL REHABILITATION PROJECT PHASE 3
R:\Civil3D Projects\Z14110105_Well-Rehab_Ph3\Dwgs

PN: Z14110104 WELL REHABILITATION PROJECT PHASE 3

PN: Z14110105

REVISIONS			
NO.	DESCRIPTION	DATE	BY

BENCH MARK ELEV. _____
DESCRIPTION:

FIELD BOOK
SCALE:
H: N.A.
V: N.A.

1"
ON ORIGINAL SCALE DRAWING ADJUST SCALED DIMENSIONS IF THIS DOES NOT SCALE AT 1"

CITY OF SACRAMENTO
DEPARTMENT OF UTILITIES

DRAWN BY: E. SALCEDO DATE: SEP 2014
DESIGNED BY: P. BARNES R.C.E. NO. E14584 DATE: SEP 2014
CHECKED BY: D. HANSEN R.C.E. NO. E12512 DATE: SEP 2014

REGISTERED PROFESSIONAL ENGINEER PAUL R. BARNES No.E15329 Exp.6/30/15 ELECTRICAL STATE OF CALIFORNIA

IMPROVEMENT PLANS FOR:
WELL REHABILITATION PROJECT PHASE 3

TYPICAL WELL SINGLE LINE DIAGRAM

GIS GRID NO.
GOT GIS?
PN: Z14110105

DWG. NO. E-2
SHEET 3 OF 54

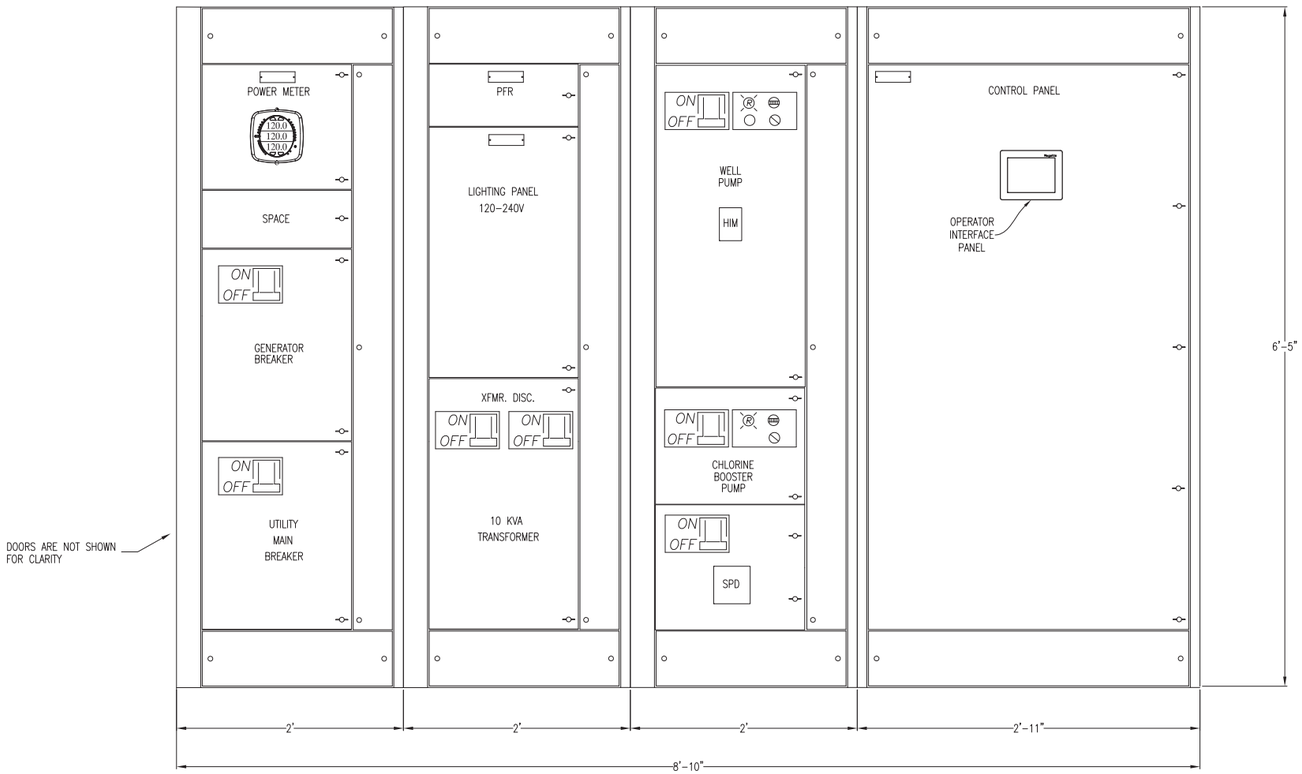

ELEVATION

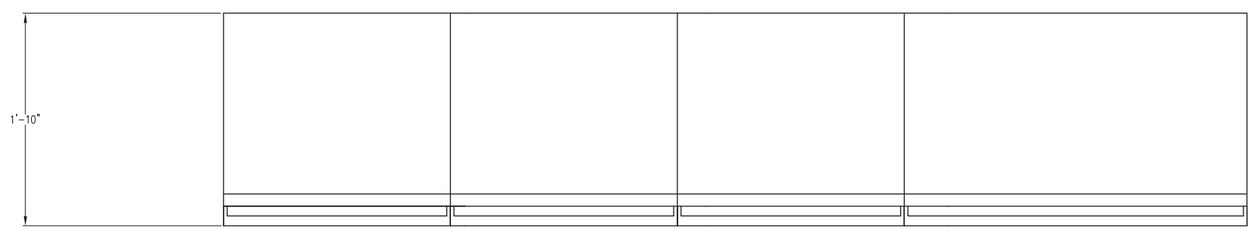

PLAN

NOTES:

1. ALL EIGHT MCC's WILL BE PROVIDED BY THE CITY TO THE CONTRACTOR.
2. THE MCC SHOWN HERE IS A TYPICAL.
3. THE CONTRACTOR SHALL TRANSPORT THE MCCs FROM CED TO EACH JOB SITE. THE CONTRACTOR SHALL INSTALL THESE MCCs AT EACH JOB SITE PER PLANS AND MANUFACTURER'S RECOMMENDATIONS.
4. CONTRACTOR SHALL PROVIDE AN MCC HOUSE KEEPING PAD AS SHOWN IN THE CIVIL SHEETS.

WELL REHABILITATION PROJECT PHASE 3
R:\Civil3D Projects\Z14110105_Well-Rehab_Ph3\Dwgs

PN: Z14110105

REVISIONS

NO.	DESCRIPTION	DATE	BY

BENCH MARK ELEV. _____
DESCRIPTION:

FIELD BOOK
SCALE:
H: N.A.
V: N.A.

1"
ON ORIGINAL SCALE DRAWING ADJUST SCALED DIMENSIONS IF THIS DOES NOT SCALE AT 1"

CITY OF SACRAMENTO
DEPARTMENT OF UTILITIES

DRAWN BY: E. SALCEDO
DATE: SEP 2014
DESIGNED BY: P. BARNES
R.C.E. NO. E14584 DATE: SEP 2014
CHECKED BY: D. HANSEN
R.C.E. NO. E12512 DATE: SEP 2014

REGISTERED PROFESSIONAL ENGINEER
PAUL R. BARNES
No.E15329
Exp.6/30/15
ELECTRICAL
STATE OF CALIFORNIA

IMPROVEMENT PLANS FOR:
WELL REHABILITATION PROJECT PHASE 3

TYPICAL WELL MCC ELEVATION AND PLAN

GIS GRID NO.
GOT GIS
PN: Z14110105

DWG. NO. E-3
SHEET 4 OF 54

PN: Z14110104 WELL REHABILITATION PROJECT PHASE 3

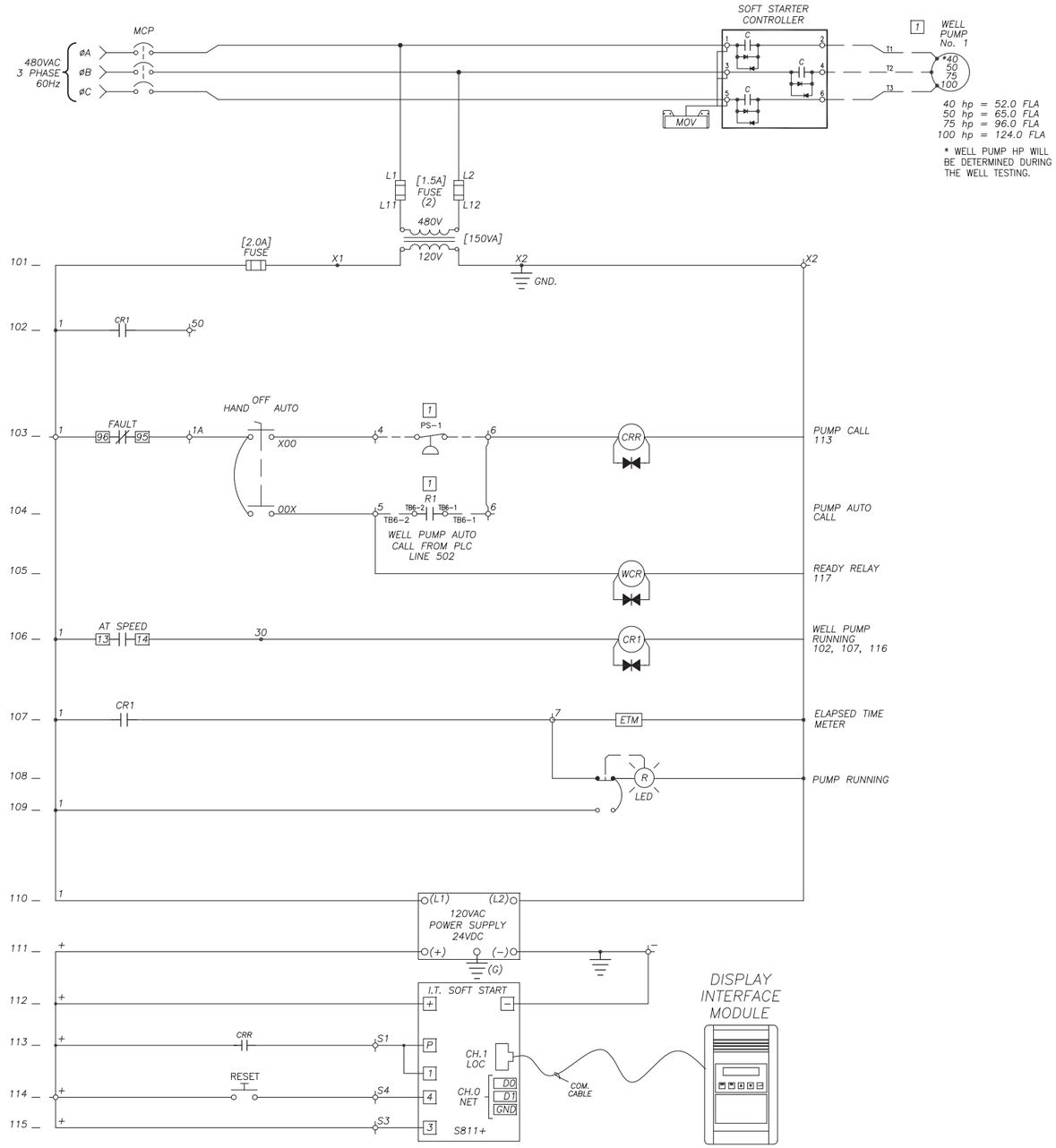

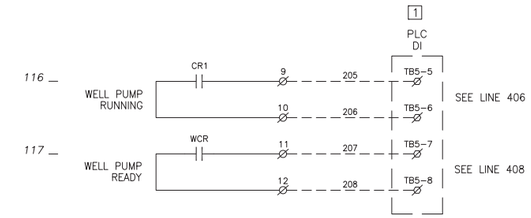

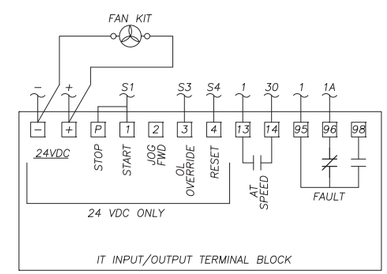

1 REMOTE LOCATION

NOTES:

1. THE CONTRACTOR SHALL CONNECT THE NEW PRESSURE SWITCH CONTACT TO THE NEW MOTOR CONTROL DIAGRAM AS SHOWN.
2. SEE SHEETS E-8 AND E-9 FOR PLC CONNECTIONS.
3. DASHED LINES INDICATE REMOTE WIRING.
4. THE CONTRACTOR SHALL MAKE THE CONNECTIONS FOR THE RUN, RUNNING, AND READY RELAY CONTACTS BETWEEN THE MOTOR CONTROL DIAGRAM AND THE PLC AS SHOWN.

WELL REHABILITATION PROJECT PHASE 3
R:\Civil3D Projects\Z14110105_Well-Rehab_Ph3\Dwgs

PN: Z14110105

REVISIONS			
NO.	DESCRIPTION	DATE	BY

BENCH MARK ELEV. _____
DESCRIPTION:

FIELD BOOK

SCALE: H: N.A. V: N.A.

1"
ON ORIGINAL SCALE DRAWING ADJUST SCALED DIMENSIONS IF THIS DOES NOT SCALE AT 1"

CITY OF SACRAMENTO
DEPARTMENT OF UTILITIES

DRAWN BY: E. SALCEDO DATE: SEP 2014
DESIGNED BY: P. BARNES R.C.E. NO. E14584 DATE: SEP 2014
CHECKED BY: D. HANSEN R.C.E. NO. E12512 DATE: SEP 2014

REGISTERED PROFESSIONAL ENGINEER — Paul R. Barnes — No. E15329 — Exp. 6/30/15 — ELECTRICAL — STATE OF CALIFORNIA

IMPROVEMENT PLANS FOR:
WELL REHABILITATION PROJECT PHASE 3

TYPICAL WELL PUMP MOTOR CONTROL DIAGRAM

GIS GRID NO. GOT GRID
PN: Z14110105
DWG. NO. E-4
SHEET 53 OF 54

PN: Z14110104 WELL REHABILITATION PROJECT PHASE 3

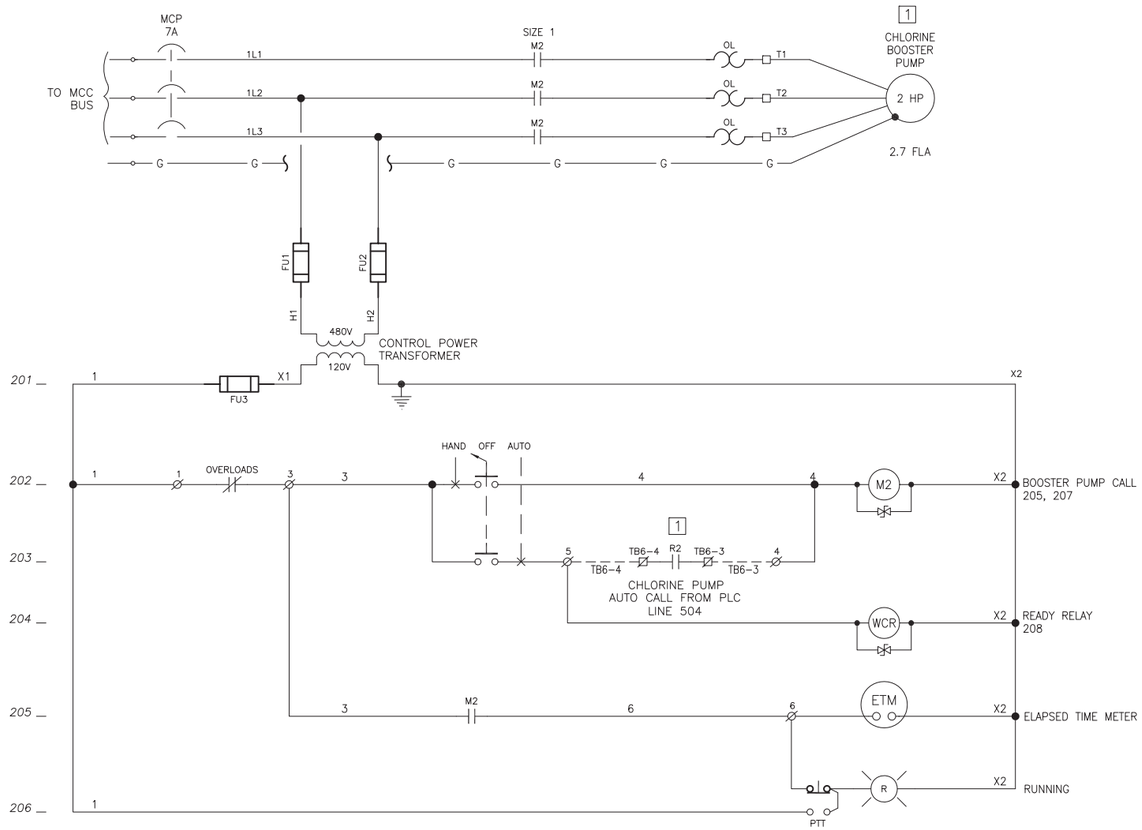

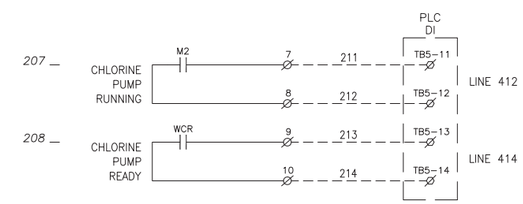

NOTE

1. THE CONTRACTOR SHALL MAKE THE CONNECTIONS FOR THE RUN, RUNNING, AND READY RELAY CONTACTS BETWEEN THE MOTOR CONTROL DIAGRAM AND THE PLC AS SHOWN.
2. SEE SHEETS E-8 AND E-9 FOR PLC CONNECTIONS.
3. DASHED LINES INDICATE REMOTE WIRING.

1 REMOTE LOCATION

WELL REHABILITATION PROJECT PHASE 3
R:\Civil3D Projects\Z14110105_Well-Rehab_Ph3\Dwgs

PN: Z14110104 WELL REHABILITATION PROJECT PHASE 3

PN: Z14110105

REVISIONS			
NO.	DESCRIPTION	DATE	BY

BENCH MARK ELEV. _____
DESCRIPTION:

FIELD BOOK

SCALE:
H: N.A.
V: N.A.

1"
ON ORIGINAL SCALE DRAWING ADJUST SCALED DIMENSIONS IF THIS DOES NOT SCALE AT 1"

CITY OF SACRAMENTO
DEPARTMENT OF UTILITIES

DRAWN BY: E. SALCEDO
DATE: SEP 2014
DESIGNED BY: P. BARNES
R.C.E. NO. E14584 DATE: SEP 2014
CHECKED BY: D. HANSEN
R.C.E. NO. E12512 DATE: SEP 2014

REGISTERED PROFESSIONAL ENGINEER
PAUL R. BARNES
No.E15329
Exp.6/30/15
ELECTRICAL
STATE OF CALIFORNIA

IMPROVEMENT PLANS FOR:
WELL REHABILITATION PROJECT PHASE 3

TYP. CHLORINE BOOSTER PUMP CONTROL DIAGRAM

GIS GRID NO.
GOT GIS

PN: Z14110105

DWG. NO. E-5
SHEET 6 OF 54

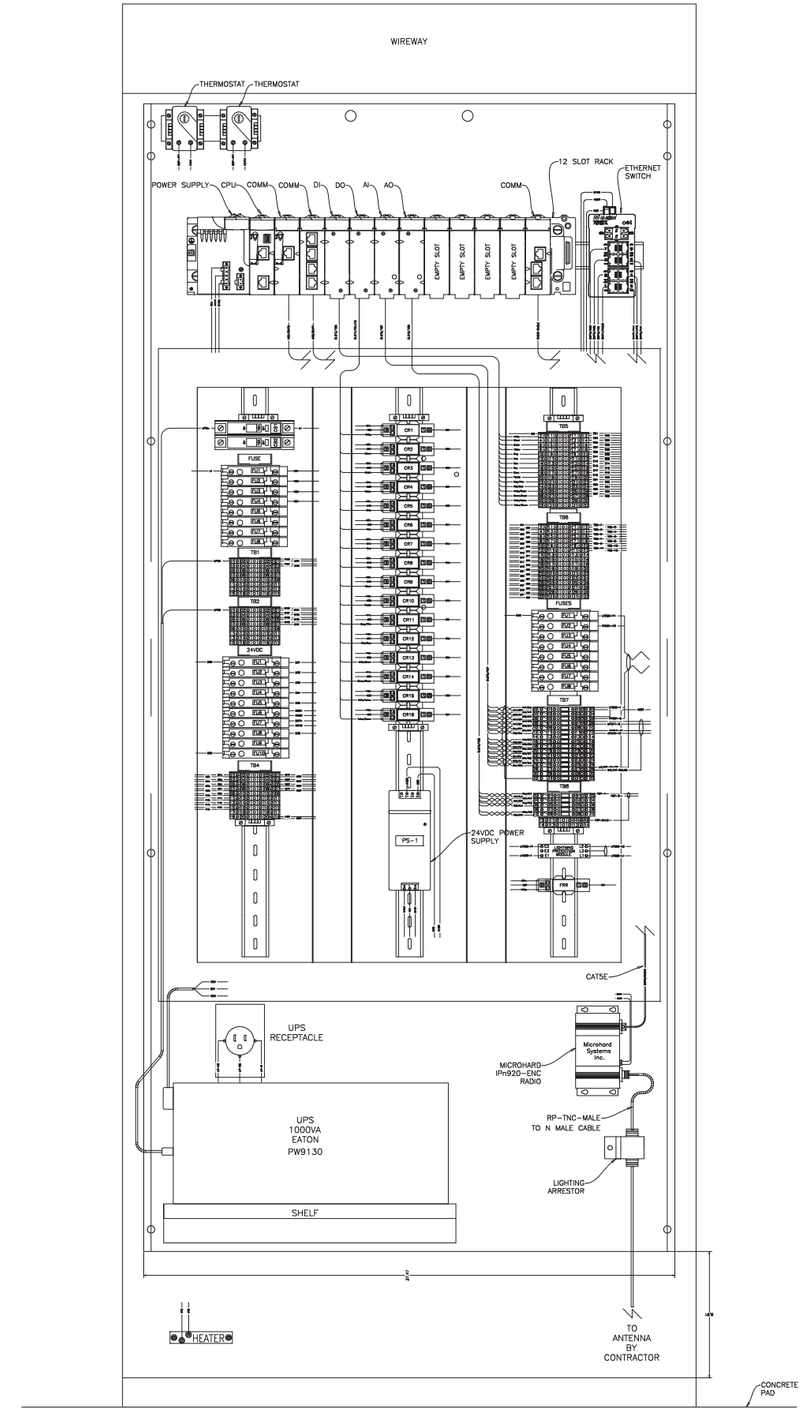

FRONT VIEW

NOTE:
1. THE CONTRACTOR SHALL MOUNT THE PLC INSIDE THE CITY SUPPLIED CONTROL CABINET AS SHOWN.

2. THE CITY WILL PROVIDE THE PLC CABINET WITHOUT THE PLC. ALL OTHER COMPONENTS WITHIN THE PLC CABINET WILL BE PROVIDED BY THE CITY.

3. THE CONTRACTOR SHALL MOUNT THE LIGHTNING PROTECTION MODULE FOR THE DRAW DOWN TX ON THE DIN RAIL INSIDE THE PLC CABINET.

4. THE CONTRACTOR SHALL MOUNT THE DRAW DOWN TX JUNCTION BOX WITH FILTER INSIDE THE PLC CABINET.

5. THE CONTRACTOR SHALL MOUNT AN EATON RELAY MODEL NUMBER D7PF2AA INSIDE THE PLC CABINET AND CONNECT PER "FLUORIDE PUMP RUN" DETAIL SHOWN ON SHEET E-8.

WELL REHABILITATION PROJECT PHASE 3
R:\Civil3D Projects\Z14110105_Well-Rehab_Ph3\Dwgs

PN: Z14110104 WELL REHABILITATION PROJECT PHASE 3

PN: Z14110105

REVISIONS			
NO.	DESCRIPTION	DATE	BY

BENCH MARK ELEV. _____
DESCRIPTION:

FIELD BOOK
SCALE:
H: N.A.
V: N.A.

1"
ON ORIGINAL SCALE DRAWING ADJUST SCALED DIMENSIONS IF THIS DOES NOT SCALE AT 1"

CITY OF SACRAMENTO
DEPARTMENT OF UTILITIES

DRAWN BY: E. SALCEDO
DATE: SEP 2014
DESIGNED BY: P. BARNES
R.C.E. NO. E14584 DATE: SEP 2014
CHECKED BY: D. HANSEN
R.C.E. NO. E12512 DATE: SEP 2014

REGISTERED PROFESSIONAL ENGINEER PAUL R. BARNES No.E15329 Exp.6/30/15 ELECTRICAL STATE OF CALIFORNIA

IMPROVEMENT PLANS FOR:
WELL REHABILITATION PROJECT PHASE 3

TYPICAL WELL PLC ELEVATION DIAGRAM

GIS GRID NO.
GOT GRID NO.
PN: Z14110105

DWG. NO. E-6
SHEET 7 OF 54

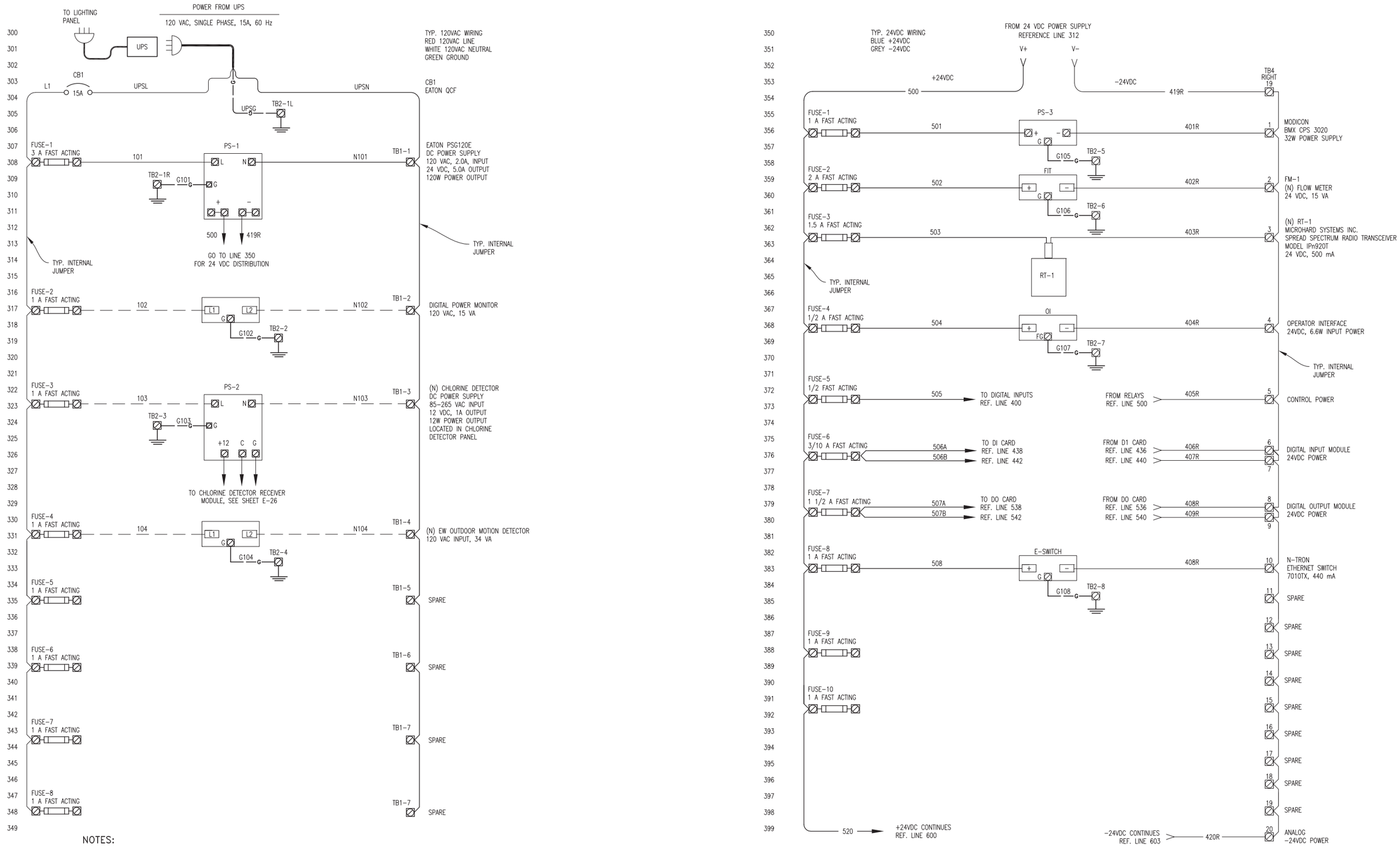

NOTES:

1. CONTRACTOR SHALL INSTALL AND CONNECT WIRES TO THE CL2 POWER SUPPLY AND CL2 DISPLAY MODULE.
2. CONTRACTRO SHALL ADD FUSES TO FUSE HOLDERS PER THE DRAWINGS.
3. CONTRACTOR SHALL PROVIDE AND INSTALL NEW CHLORINE DETECTOR POWER SUPPLY, FLOW METER TX, RADIO, AND MOTION DETECTOR.

WELL REHABILITATION PROJECT PHASE 3
R:\Civil3D Projects\Z14110105_Well-Rehab_Ph3\Dwgs

PN: Z14110104 WELL REHABILITATION PROJECT PHASE 3

PN: Z14110105

REVISIONS			
NO.	DESCRIPTION	DATE	BY

BENCH MARK ELEV. _____
DESCRIPTION:

FIELD BOOK

SCALE:
H: N.A.
V: N.A.

1"
ON ORIGINAL SCALE DRAWING ADJUST SCALED DIMENSIONS IF THIS DOES NOT SCALE AT 1"

CITY OF SACRAMENTO
DEPARTMENT OF UTILITIES

DRAWN BY: E. SALCEDO DATE: SEP 2014
DESIGNED BY: P. BARNES R.C.E. NO. E14584 DATE: SEP 2014
CHECKED BY: D. HANSEN R.C.E. NO. E12512 DATE: SEP 2014

REGISTERED PROFESSIONAL ENGINEER
PAUL R. BARNES
No.E15329
Exp.6/30/15
ELECTRICAL
STATE OF CALIFORNIA

IMPROVEMENT PLANS FOR:
WELL REHABILITATION PROJECT PHASE 3

TYPICAL WELL PLC POWER DISTRIBUTION DIAGRAM

GIS GRID NO.
GOT 6G3

PN: Z14110105

DWG. NO. E-7
SHEET 8 OF 54

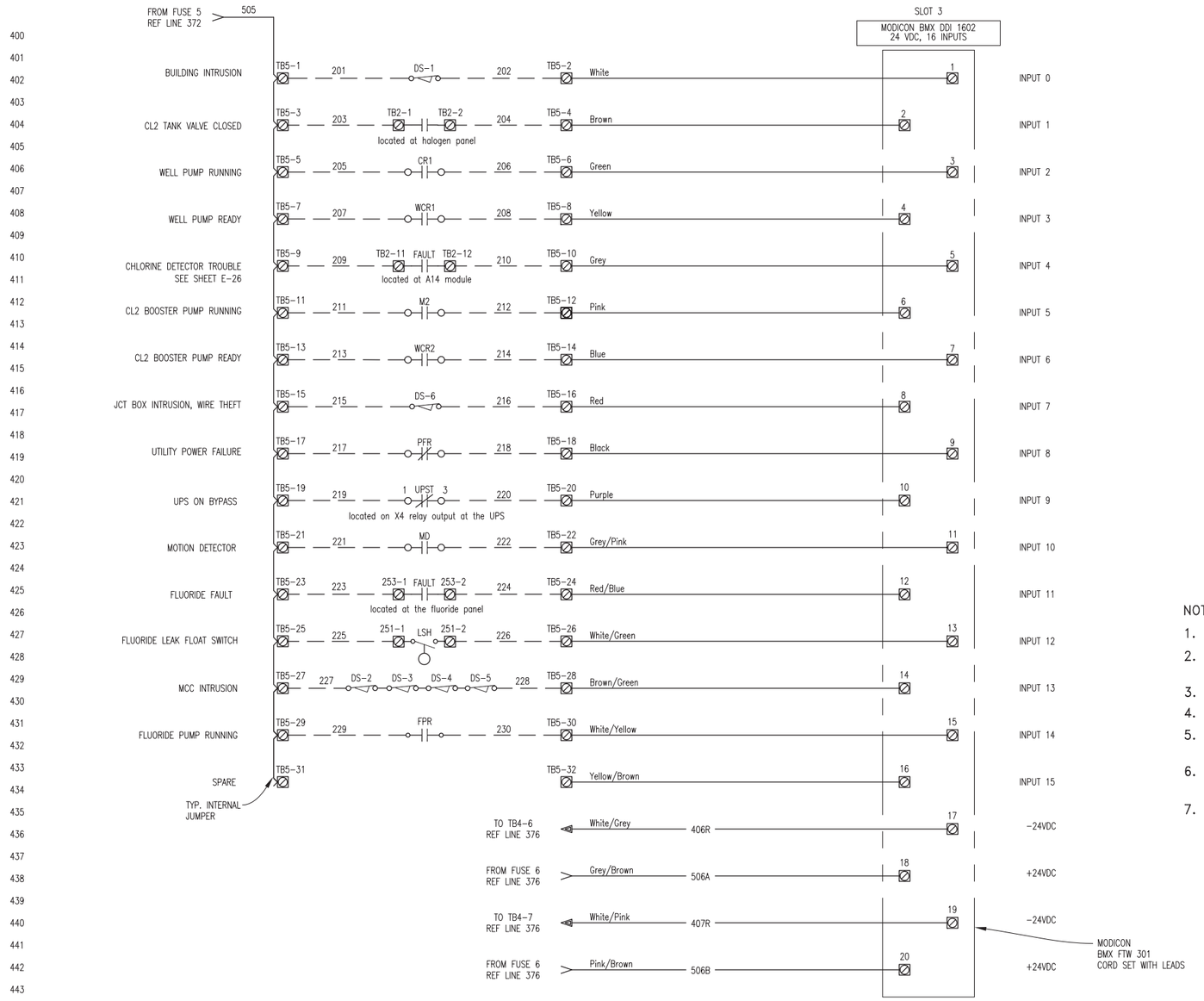

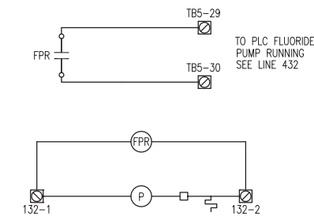

FLUORIDE PUMP RUN DETAIL

NOTES:

1. TERMINALS 132-1 AND 132-2 ARE LOCATED AT FLUORIDE SYSTEM CONTROL PANEL.

NOTES:

1. CONTRACTOR SHALL FURNISH, INSTALL AND CONNECT ALL WIRES TO THE PLC.
2. CONTRACTOR TO PROVIDE AND INSTALL HEAT SHRINKABLE WIRE LABELS WITH THE NUMBERS SHOWN ON THE PLANS.
3. THE CITY WILL PROVIDE ALL PLC PROGRAMMING.
4. INTERNAL WIRING TO BE TEW MIN. 16AWG. COLOR AS SHOWN.
5. CONTRACTOR SHALL INSTALL CABINET DOOR SWITCHES ON EACH DOOR OF THE MCC AND CONNECT TO THE PLC, SEE SPECIFICATIONS.
6. CONTRACTOR SHALL CONNECT THE EXISTING CHEMICAL BUILDING MAGNETIC DOOR SWITCH AND CHLORINE TANK VALVE CLOSED CONTACT TO THE PLC AS SHOWN.
7. CONTRACTOR SHALL INSTALL THE CORD SETS TO EACH PLC INPUT OUTPUT CARD AS SHOWN IN THE DRAWINGS.

WELL REHABILITATION PROJECT PHASE 3
R:\Civil3D Projects\Z14110105_Well-Rehab_Ph3\Dwgs

PN: Z14110104 WELL REHABILITATION PROJECT PHASE 3

PN: Z14110105

REVISIONS			
NO.	DESCRIPTION	DATE	BY

BENCH MARK ELEV. _____
DESCRIPTION:

FIELD BOOK
SCALE:
H: N.A.
V: N.A.

1"
ON ORIGINAL SCALE DRAWING ADJUST SCALED DIMENSIONS IF THIS DOES NOT SCALE AT 1"

CITY OF SACRAMENTO
DEPARTMENT OF UTILITIES

DRAWN BY: E. SALCEDO
DATE: SEP 2014
DESIGNED BY: P. BARNES
R.C.E. NO. E14584 DATE: SEP 2014
CHECKED BY: D. HANSEN
R.C.E. NO. E12512 DATE: SEP 2014

REGISTERED PROFESSIONAL ENGINEER
PAUL R. BARNES
No. E15329
Exp. 6/30/15
ELECTRICAL
STATE OF CALIFORNIA

IMPROVEMENT PLANS FOR:
WELL REHABILITATION PROJECT PHASE 3
TYPICAL WELL PLC
DIGITAL INPUTS DIAGRAM

GIS GRID NO.
GOT GIS

PN: Z14110105

DWG. NO. E-8
SHEET 38 OF 54

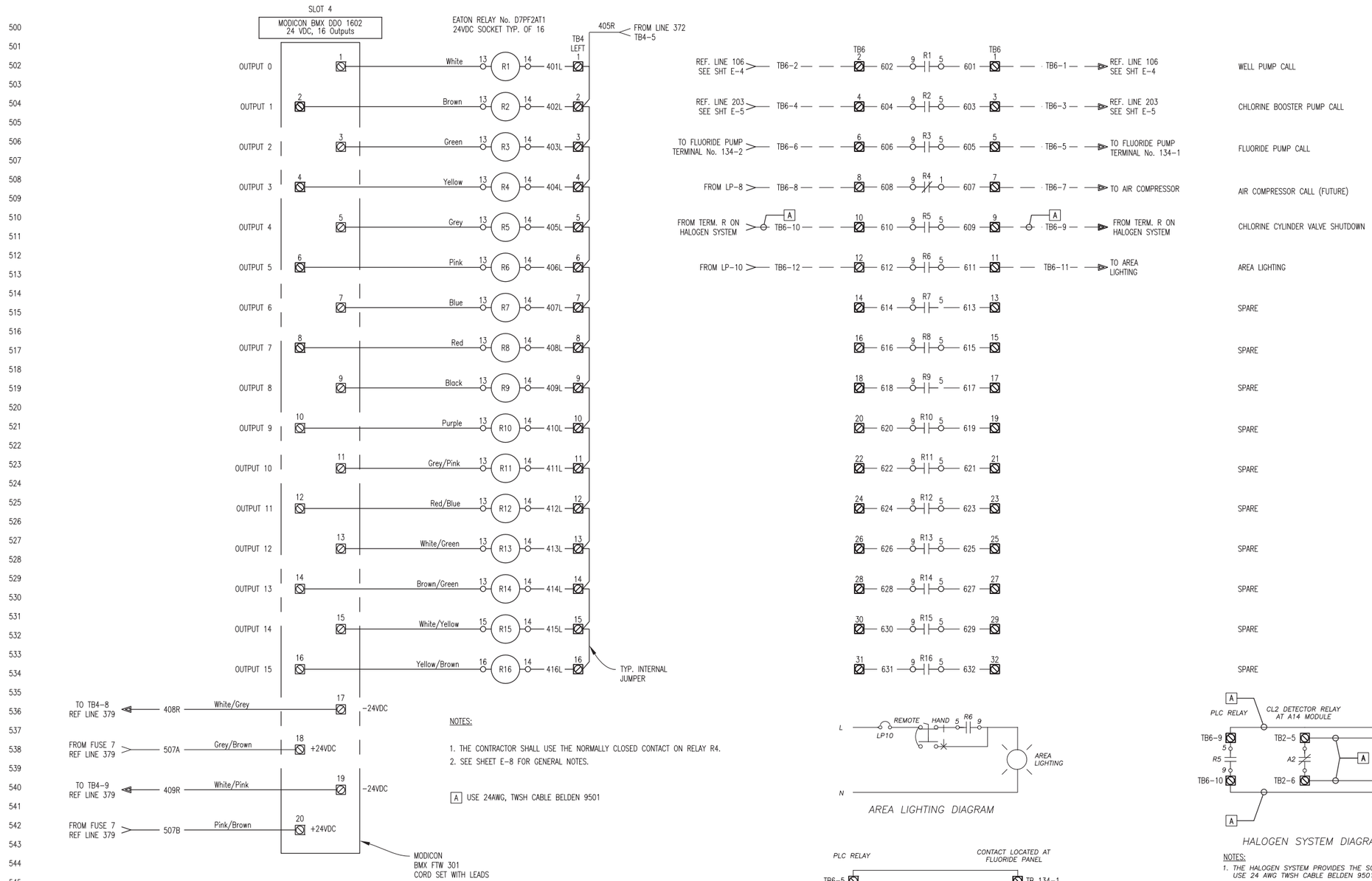

WELL REHABILITATION PROJECT PHASE 3
R:\Civil3D Projects\Z14110105_Well-Rehab_Ph3\Dwgs

PN: Z14110104 WELL REHABILITATION PROJECT PHASE 3

PN: Z14110105

REVISIONS			
NO.	DESCRIPTION	DATE	BY

BENCH MARK ELEV. _____
DESCRIPTION:

FIELD BOOK
SCALE:
H: N.A.
V: N.A.

1"
ON ORIGINAL SCALE DRAWING ADJUST SCALED DIMENSIONS IF THIS DOES NOT SCALE AT 1"

CITY OF SACRAMENTO
DEPARTMENT OF UTILITIES

DRAWN BY: E. SALCEDO DATE: SEP 2014
DESIGNED BY: P. BARNES R.C.E. NO. E14584 DATE: SEP 2014
CHECKED BY: D. HANSEN R.C.E. NO. E12512 DATE: SEP 2014

REGISTERED PROFESSIONAL ENGINEER PAUL R. BARNES No.E15329 Exp.6/30/15 ELECTRICAL STATE OF CALIFORNIA

IMPROVEMENT PLANS FOR:
WELL REHABILITATION PROJECT PHASE 3
TYPICAL WELL PLC
DIGITAL OUTPUTS DIAGRAM

GIS GRID NO. GOT GRID NO.
PN: Z14110105
DWG. NO. E-9
SHEET 10 OF 54

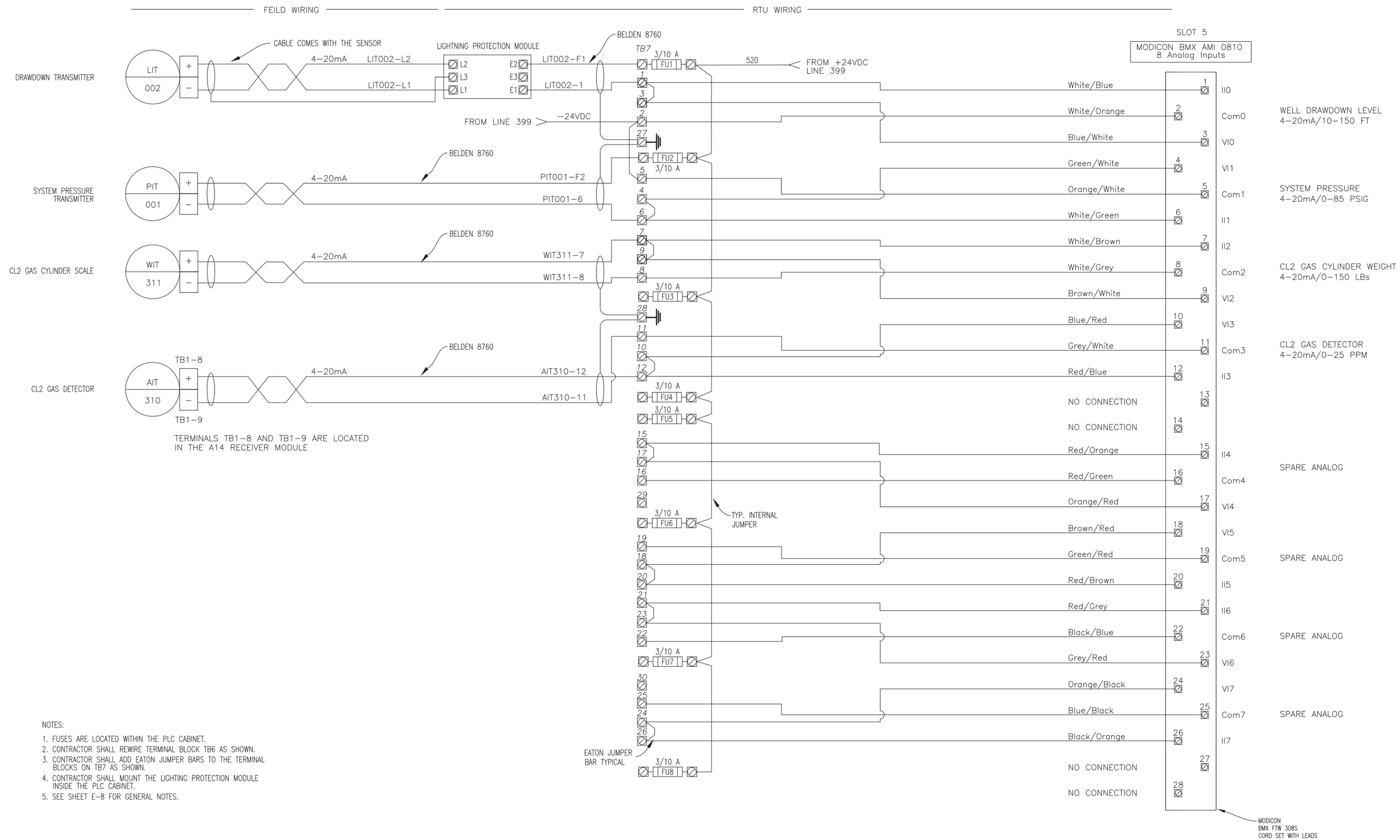

NOTES:

1. FUSES ARE LOCATED WITHIN THE PLC CABINET.
2. CONTRACTOR SHALL REWIRE TERMINAL BLOCK TB6 AS SHOWN.
3. CONTRACTOR SHALL ADD EATON JUMPER BARS TO THE TERMINAL BLOCKS ON TB7 AS SHOWN.
4. CONTRACTOR SHALL MOUNT THE LIGHTING PROTECTION MODULE INSIDE THE PLC CABINET.
5. SEE SHEET E–8 FOR GENERAL NOTES.

WELL REHABILITATION PROJECT PHASE 3
R:\Civil3D Projects\Z14110105_Well-Rehab_Ph3\Dwgs

PN: Z14110104 WELL REHABILITATION PROJECT PHASE 3

PN: Z14110105

REVISIONS			
NO.	DESCRIPTION	DATE	BY

BENCH MARK ELEV. _____
DESCRIPTION:

FIELD BOOK
SCALE: H: N.A. V: N.A.

1" ON ORIGINAL SCALE DRAWING ADJUST SCALED DIMENSIONS IF THIS DOES NOT SCALE AT 1"

CITY OF SACRAMENTO
DEPARTMENT OF UTILITIES

DRAWN BY: E. SALCEDO DATE: SEP 2014
DESIGNED BY: P. BARNES R.C.E. NO. E14584 DATE: SEP 2014
CHECKED BY: D. HANSEN R.C.E. NO. E12512 DATE: SEP 2014

REGISTERED PROFESSIONAL ENGINEER PAUL R. BARNES No.E15329 Exp.6/30/15 ELECTRICAL STATE OF CALIFORNIA

IMPROVEMENT PLANS FOR:
WELL REHABILITATION PROJECT PHASE 3
TYPICAL WELL PLC
ANALOG INPUTS DIAGRAM

GIS GRID NO. GOT G3
PN: Z14110105

DWG. NO. E–10
SHEET 11 OF 54

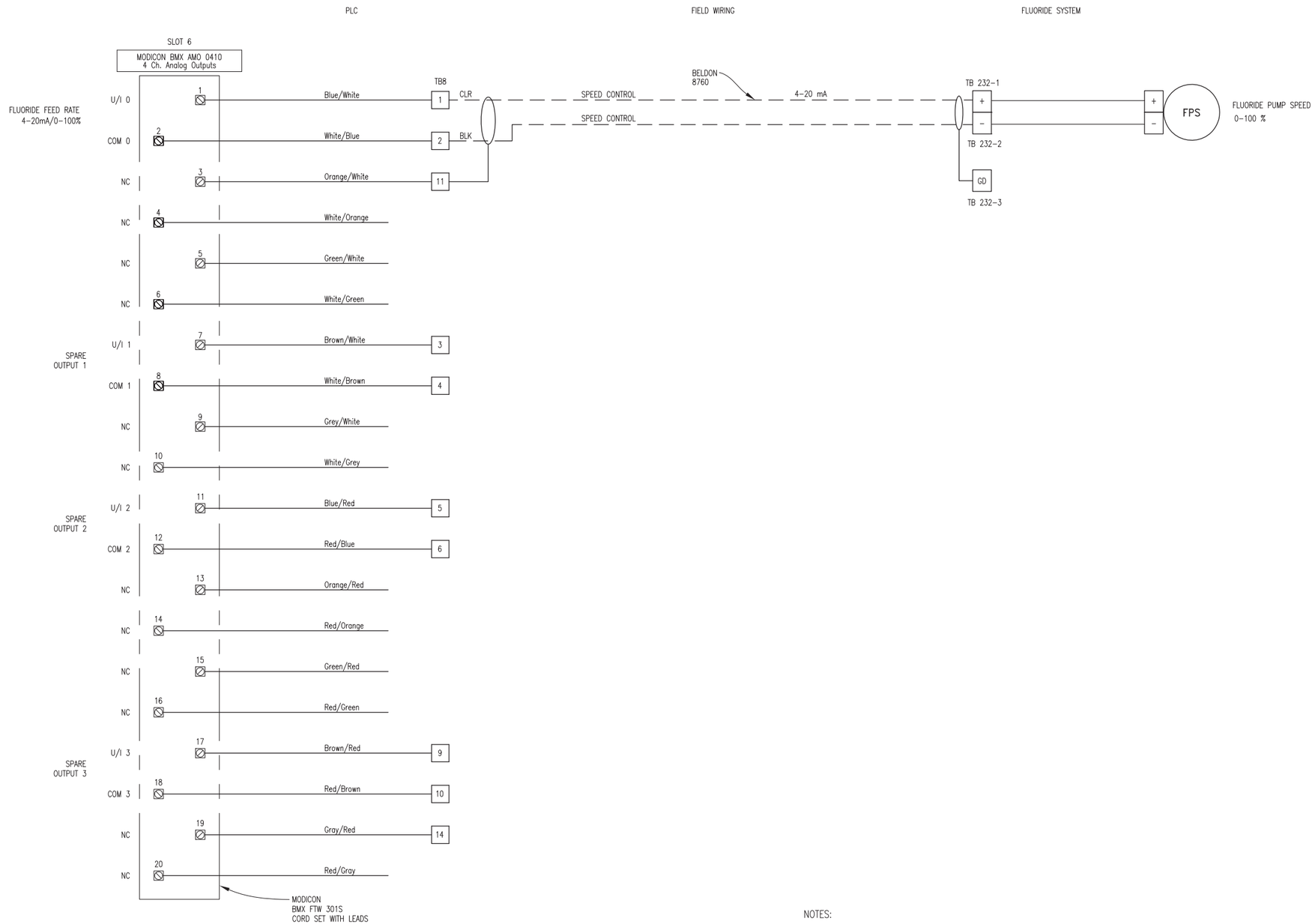

NOTES:

1. SEE SHEET E-8 FOR GENERAL NOTES.

WELL REHABILITATION PROJECT PHASE 3
R:\Civil3D Projects\Z14110105_Well-Rehab_Ph3\Dwgs

PN: Z14110104 WELL REHABILITATION PROJECT PHASE 3

PN: Z14110105

REVISIONS			
NO.	DESCRIPTION	DATE	BY

BENCH MARK ELEV. _____
DESCRIPTION:

FIELD BOOK
SCALE:
H: N.A.
V: N.A.

1"
ON ORIGINAL SCALE DRAWING ADJUST SCALED DIMENSIONS IF THIS DOES NOT SCALE AT 1"

CITY OF SACRAMENTO
DEPARTMENT OF UTILITIES

DRAWN BY: E. SALCEDO
DATE: SEP 2014
DESIGNED BY: P. BARNES
R.C.E. NO. E14584 DATE: SEP 2014
CHECKED BY: D. HANSEN
R.C.E. NO. E12512 DATE: SEP 2014

REGISTERED PROFESSIONAL ENGINEER
PAUL R. BARNES
No.E15329
Exp.6/30/15
ELECTRICAL
STATE OF CALIFORNIA

IMPROVEMENT PLANS FOR:
WELL REHABILITATION PROJECT PHASE 3
TYPICAL WELL PLC
ANALOG OUTPUTS DIAGRAM

GIS GRID NO.
GOT GRID

PN: Z14110105

DWG. NO. E-11
SHEET 12 OF 54

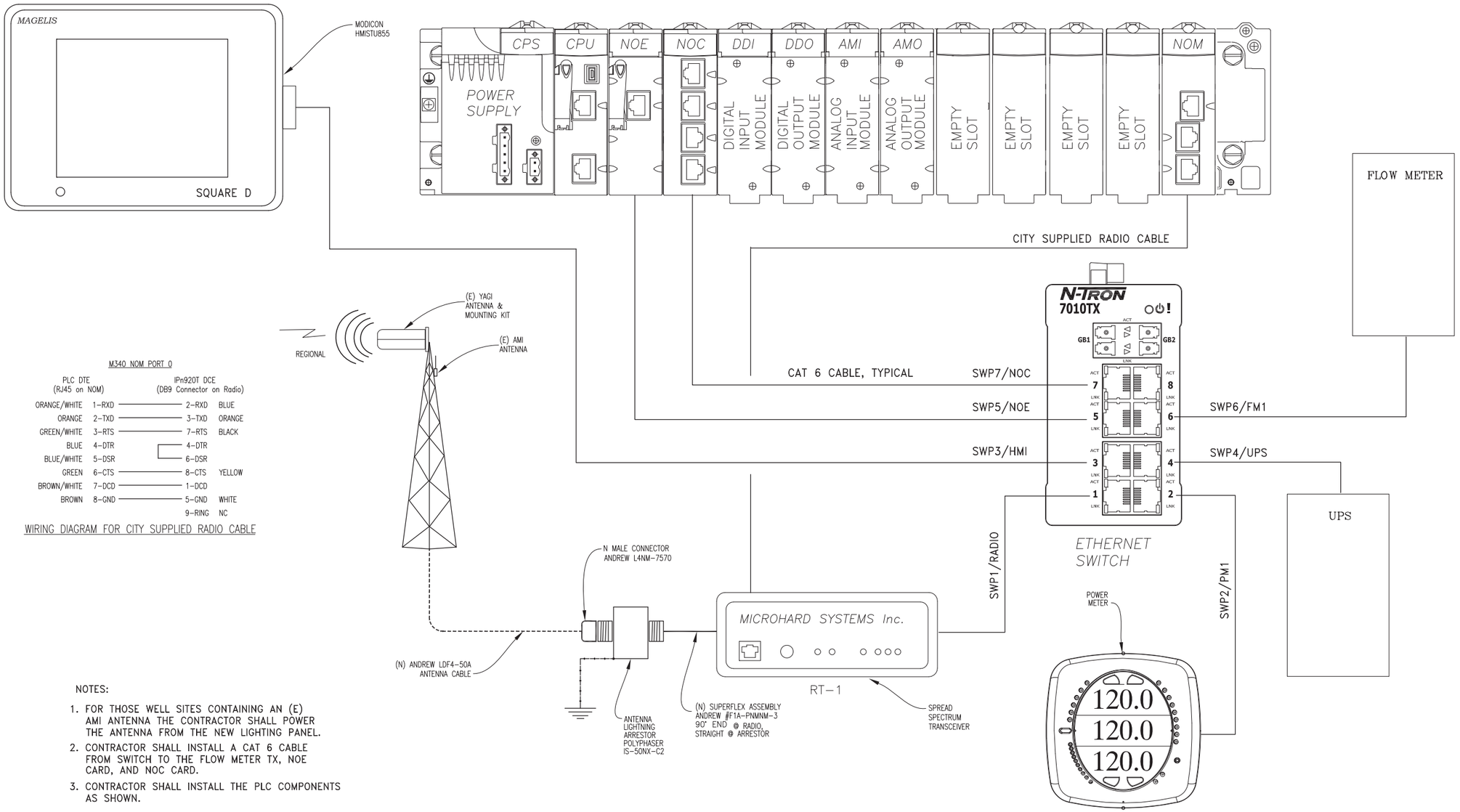

M340 NOM PORT 0

PLC DTE (RJ45 on NOM)		IPn920T DCE (DB9 Connector on Radio)	
ORANGE/WHITE	1-RXD	2-RXD	BLUE
ORANGE	2-TXD	3-TXD	ORANGE
GREEN/WHITE	3-RTS	7-RTS	BLACK
BLUE	4-DTR	4-DTR	
BLUE/WHITE	5-DSR	6-DSR	
GREEN	6-CTS	8-CTS	YELLOW
BROWN/WHITE	7-DCD	1-DCD	
BROWN	8-GND	5-GND	WHITE
		9-RING	NC

WIRING DIAGRAM FOR CITY SUPPLIED RADIO CABLE

NOTES:

1. FOR THOSE WELL SITES CONTAINING AN (E) AMI ANTENNA THE CONTRACTOR SHALL POWER THE ANTENNA FROM THE NEW LIGHTING PANEL.
2. CONTRACTOR SHALL INSTALL A CAT 6 CABLE FROM SWITCH TO THE FLOW METER TX, NOE CARD, AND NOC CARD.
3. CONTRACTOR SHALL INSTALL THE PLC COMPONENTS AS SHOWN.

WELL REHABILITATION PROJECT PHASE 3
R:\Civil3D Projects\Z14110105_Well-Rehab_Ph3\Dwgs

PN: Z14110105

REVISIONS			
NO.	DESCRIPTION	DATE	BY

BENCH MARK ELEV. _____
DESCRIPTION:

FIELD BOOK

SCALE:
H: N.A.
V: N.A.

1"
ON ORIGINAL SCALE DRAWING ADJUST SCALED DIMENSIONS IF THIS DOES NOT SCALE AT 1"

CITY OF SACRAMENTO
DEPARTMENT OF UTILITIES

DRAWN BY: E. SALCEDO
DATE: SEP 2014
DESIGNED BY: P. BARNES
R.C.E. NO. E14584 DATE: SEP 2014
CHECKED BY: D. HANSEN
R.C.E. NO. E12512 DATE: SEP 2014

REGISTERED PROFESSIONAL ENGINEER
PAUL R. BARNES
No.E15329
Exp.6/30/15
ELECTRICAL
STATE OF CALIFORNIA

IMPROVEMENT PLANS FOR:
WELL REHABILITATION PROJECT PHASE 3

TYPICAL WELL PLC COMMUNICATIONS DIAGRAM

GIS GRID NO.
GOT G3

PN: Z14110105

DWG. NO. E-12
SHEET 13 OF 54

PN: Z14110104 WELL REHABILITATION PROJECT PHASE 3

GENERAL ELECTRICAL NOTES:

1. CONTRACTOR SHALL REFER TO THE CIVIL SHEETS FOR CIVIL IMPROVEMENTS.
2. THE CONDUIT TO THE GENERATOR RECEPTACLE SHALL BE DETERMINED BY THE WELL TEST WHICH DETERMINES THE SIZE OF THE WELL PUMP.
3. CONTRACTOR SHALL MOUNT NEW SMUD METER PANEL AND GENERATOR RECEPTACLE TO THE NEW SWITCHGEAR COVER USING GALVANIZED HARDWARE.
4. CONTRACTOR SHALL PROVIDE OUTDOOR RATED BYPASS SWITCH FOR AREA LIGHTING.
5. CONTRACTOR SHALL INSTALL SIMKAR LED LIGHTING FIXTURE MODEL No. EN2LED 4 RFA S 46 41 U1, 120 V OUTDOOR RATED RECEPTACLE, AND OUTDOOR RATED SWITCH FOR THE SWITCHGEAR COVER LIGHTS AND INSIDE THE EXISTING CHEMICAL BUILDING AT WELL 138.
6. CONTRACTOR SHALL INSTALL GE LED LIGHTING FIXTURE MODEL No. EFMR-1-WF-43-F-G-4-T-DKBZ FOR ALL OF THE SWITCHGEAR COVERS, EXISTING CHEMICAL BUILDINGS, AND POLES. CONTRACTOR SHALL PROVIDE POLE TOP ADAPTER, WALL MOUNT LIGHTING BRACKET, AND ALL APPURTENANCES AS REQUIRED.
7 CONTRACTOR SHALL GROUND THE EXISTING FENCE EXCEPT FOR WELL 94, SEE SHEET E-23 FOR DETAILS. SEE SHEET E-22 FOR GROUNDING WELL DETAILS.
8. CONTRACTOR SHALL INTERCEPT THE EXISTING 1 1/2" CONDUIT S1 AND EXTEND THIS CONDUIT INTO THE NEW CONTROL PANEL. REMOVE AND SALVAGE THE EXISTING ANTENNA CABLE. INSTALL NEW ANTENA CABLE PER THE SPECIFICATION.
9. CONTRACTOR SHALL INTERCEPT AND EXTEND CONDUITS P2 AND P5 INTO THE NEW MCC, EXCEPT FOR WELL 107, 122, & 138.
10. SEE SHEETS E-22, E-23, E-24, E-25, E-26 AND E-27 FOR ADDITIONAL WORK.
11. CONTRACTOR SHALL INSTALL THE NEW CITY SUPPLIED FLUORIDE SYSTEM AND CONNECT TO THE EXISTING WATER INLET LINE AND MAKE ALL NEW ELECTRICAL CONNECTIONS AS REQUIRED FOR A COMPLETE OPERATIONAL SYSTEM.
12. THE LAYOUT OF THE EXISTING EQUIPMENT SHOWN IN EACH FIBERGLASS CHEMICAL BUILDING IS APPROXIMATE ONLY, SEE SHEET E-24 FOR DETAILS.
13. CONTRACTOR SHALL INSTALL AND CONNECT THE NEW CHLORINE DETECTOR SYSTEM PER PLAN SHEET E-26.
14. CONTRACTOR SHALL MODIFY THE EXISTING PROBE WELL PER PLAN SHEET E-25. CONTRACTOR SHALL INSTALL NEW STAINLESS STEEL NIPPLES AND PROBE WELL. CONTRACTOR SHALL INSTALL NEW VICTAULIC FITTINGS.
15. CONTRACTOR SHALL REMOVE AND SALVAGE THE (E) PLC CABINET. CONTRACTOR SHALL INSTALL (N) NEMA 1 8"X8"X4" PLASTIC JUNCTION BOX. CONTRACTOR SHALL EXTEND (E) CONDUITS INTO NEW JCT BOX AND MATCH CONDUIT MATERIAL.
16. CONTRACTOR SHALL USE TRAFFIC RATED LIDS ON ALL PULL BOXES SUBJECTED TO VEHICLE TRAFFIC.
17. CONTRACTOR SHALL MOUNT NEW CHLORINE LEAK DETECTOR IN SAME LOCATION AS THE EXISTING UNIT.
18. ALL CONDUIT INSIDE EACH CHEMICAL BUILDING SHALL BE SCHEDULE 40 PVC.
19. CONTRACTOR SHALL SPLICE TOGETHER THE PUMP SUBMERSIBLE CABLE TO THE PUMP CONDUCTORS AT THE WELL HEAD JUNCTION BOX.

WELL 94 NOTES

1. CONTRACTOR SHALL INSTALL A NEW N30 PULL BOX, ADJACENT TO THE CHEMICAL BUILDING.
2. CONTRACTOR SHALL INTERCEPT AND EXTEND CONDUITS C3 AND S7 INTO THE NEW PULL BOX.
3. CONTRACTOR SHALL EXTEND NEW CONDUIT P3 INTO THE SMUD PULL BOX. CONTRACTOR SHALL CONTACT SMUD TO REMOVE POWER FROM THE TRANSFORMER. SMUD TO MAKE CONNECTIONS AT THE SMUD PULL BOX.
4. CONTRACTOR SHALL INSTALL CONDUITS C1 AND S8 INTO THE EXISTING JUNCTION BOX.
5. CONTRACTOR SHALL INTERCEPT EXISTING CONDUIT S1 & EXTEND INTO THE NEW PULL BOX.

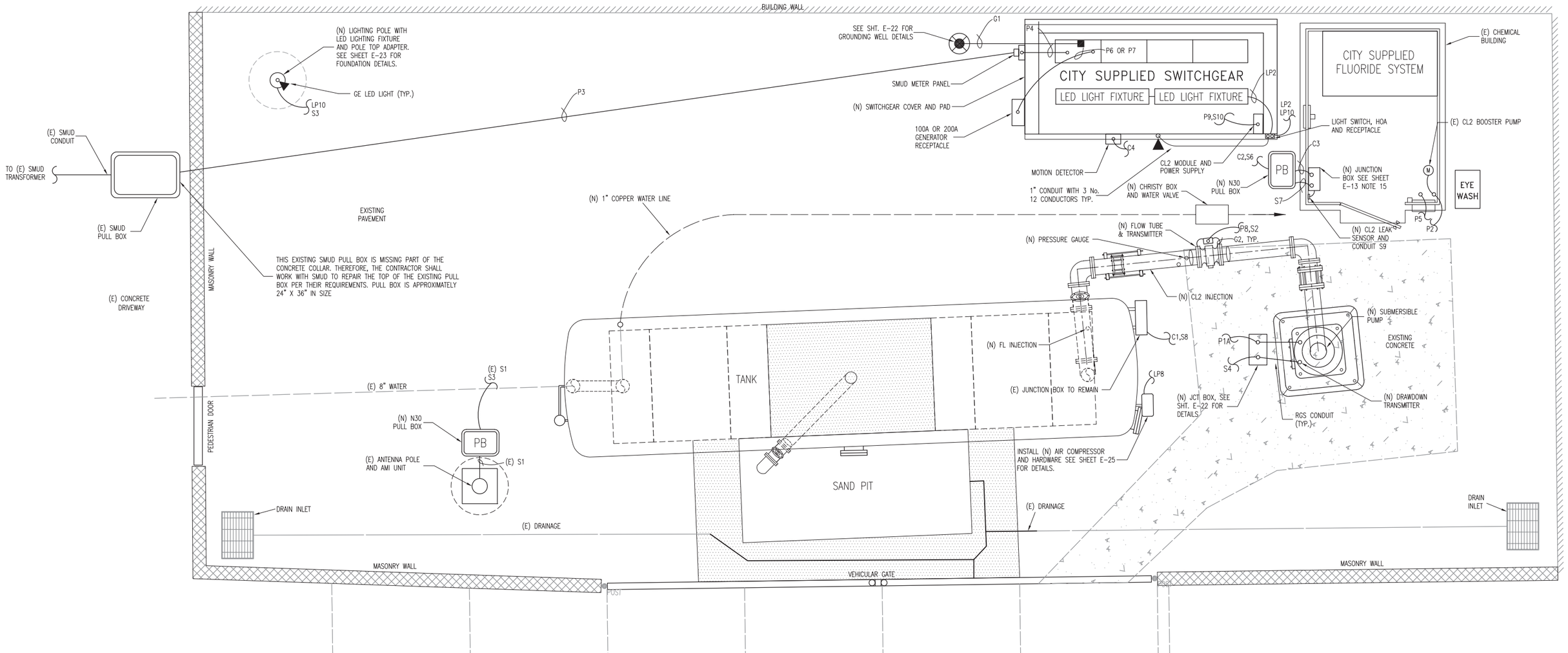

WELL REHABILITATION PROJECT PHASE 3
R:\Civil3D Projects\Z14110105_Well-Rehab_Ph3\Dwgs

PN: Z14110104 WELL REHABILITATION PROJECT PHASE 3

PN: Z14110105

REVISIONS			
NO.	DESCRIPTION	DATE	BY

BENCH MARK ELEV. _____
DESCRIPTION:

FIELD BOOK

SCALE:
H: N.A.
V: N.A.

1"
ON ORIGINAL SCALE DRAWING ADJUST SCALED DIMENSIONS IF THIS DOES NOT SCALE AT 1"

CITY OF SACRAMENTO
DEPARTMENT OF UTILITIES

DRAWN BY: E. SALCEDO
DATE: SEP 2014
DESIGNED BY: P. BARNES
R.C.E. NO. E14584 DATE: SEP 2014
CHECKED BY: D. HANSEN
R.C.E. NO. E12512 DATE: SEP 2014

REGISTERED PROFESSIONAL ENGINEER
PAUL R. BARNES
No.E15329
Exp.6/30/15
ELECTRICAL
STATE OF CALIFORNIA

IMPROVEMENT PLANS FOR:
WELL REHABILITATION PROJECT PHASE 3
WELL 94 ELECTRICAL SITE PLAN
NEAR 620 RIO TIERRA AVE (APN 250-0520-006)

GIS GRID NO.
GOT GIS

PN: Z14110105

DWG. NO. E-13
SHEET 14 OF 54

WELL 107 NOTES

1. FOR GENERAL ELECTRICAL NOTES SEE SHEET E-13
2. CONTRACTOR SHALL COORDINATE THE INSTALLATION OF THE SMUD TRANSFORMER PAD WITH SMUD AND INSTALL PER SMUD'S REQUIREMENTS.
3. SMUD SHALL INSTALL THE NEW TRANSFORMER AND MAKE ALL CONNECTIONS AT THE TRANSFORMER.
4. CONTRACTOR SHALL PROVIDE AND INSTALL THE TRANSFORMER PAD AND SMUD PRIMARY CONDUITS. THESE ITEMS SHALL MEET SMUD REQUIREMENTS.
5. CONTACTOR SHALL EXCAVATE EXISTING MATERIAL FOR THE INSTALLATION OF THE TRANSFORMER PAD. COMPACT EXISTING SURFACE TO 95% COMPACTION. PLACE TRANSFORMER PAD ON 6" OF CLASS II AB COMPACTED TO 95%.

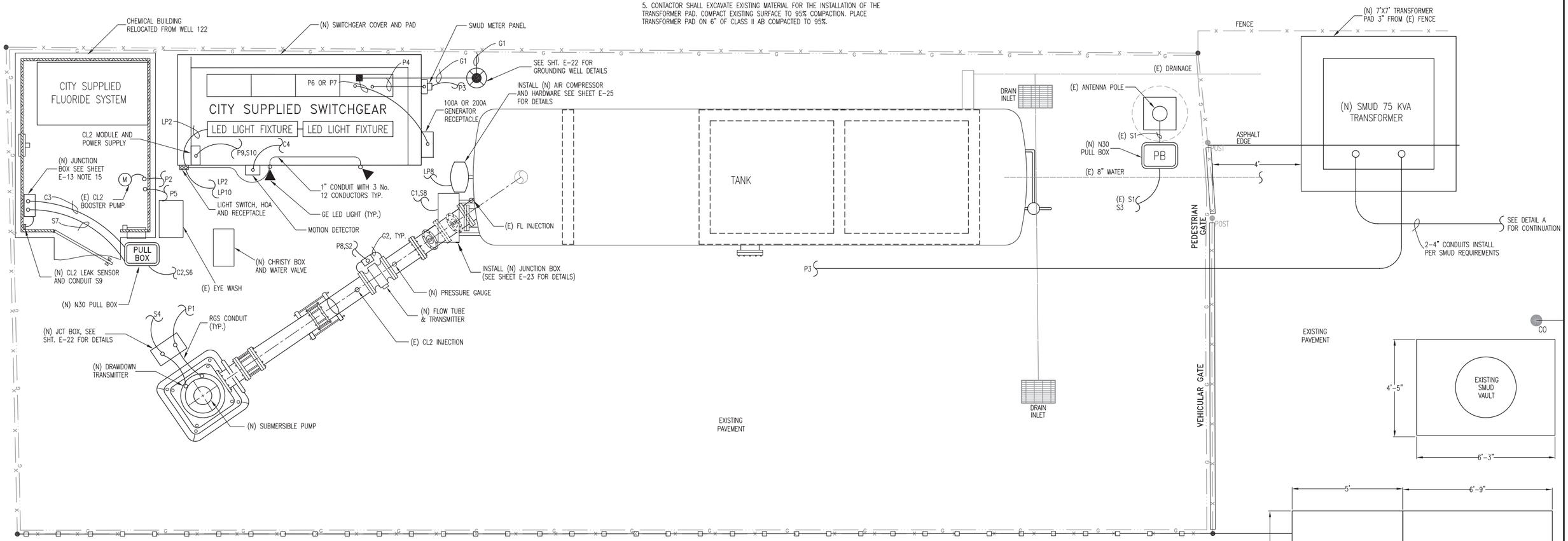

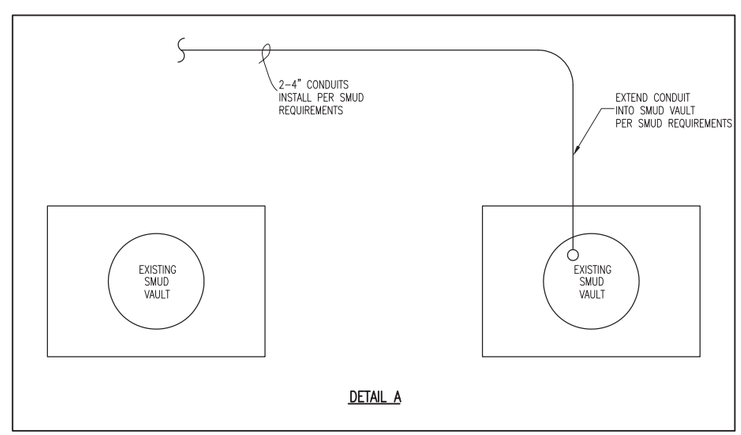

DETAIL A

WELL REHABILITATION PROJECT PHASE 3
R:\Civil3D Projects\Z14110105_Well-Rehab_Ph3\Dwgs

PN: Z14110104 WELL REHABILITATION PROJECT PHASE 3

PN: Z14110105

REVISIONS			
NO.	DESCRIPTION	DATE	BY

BENCH MARK ELEV. _____
DESCRIPTION:

FIELD BOOK

SCALE:
H: N.A.
V: N.A.

1"
ON ORIGINAL SCALE DRAWING ADJUST SCALED DIMENSIONS IF THIS DOES NOT SCALE AT 1"

CITY OF SACRAMENTO
DEPARTMENT OF UTILITIES

DRAWN BY: E. SALCEDO DATE: SEP 2014
DESIGNED BY: P. BARNES R.C.E. NO. E14584 DATE: SEP 2014
CHECKED BY: D. HANSEN R.C.E. NO. E12512 DATE: SEP 2014

REGISTERED PROFESSIONAL ENGINEER PAUL R. BARNES No.E15329 Exp.6/30/15 ELECTRICAL STATE OF CALIFORNIA

IMPROVEMENT PLANS FOR:
WELL REHABILITATION PROJECT PHASE 3
WELL 107 ELECTRICAL SITE PLAN
7907 GRANDSTAFF DR (APN 117-0021-023)

GIS GRID NO. G03 G07
PN: Z14110105

DWG. NO. E-14
SHEET 13 OF 54

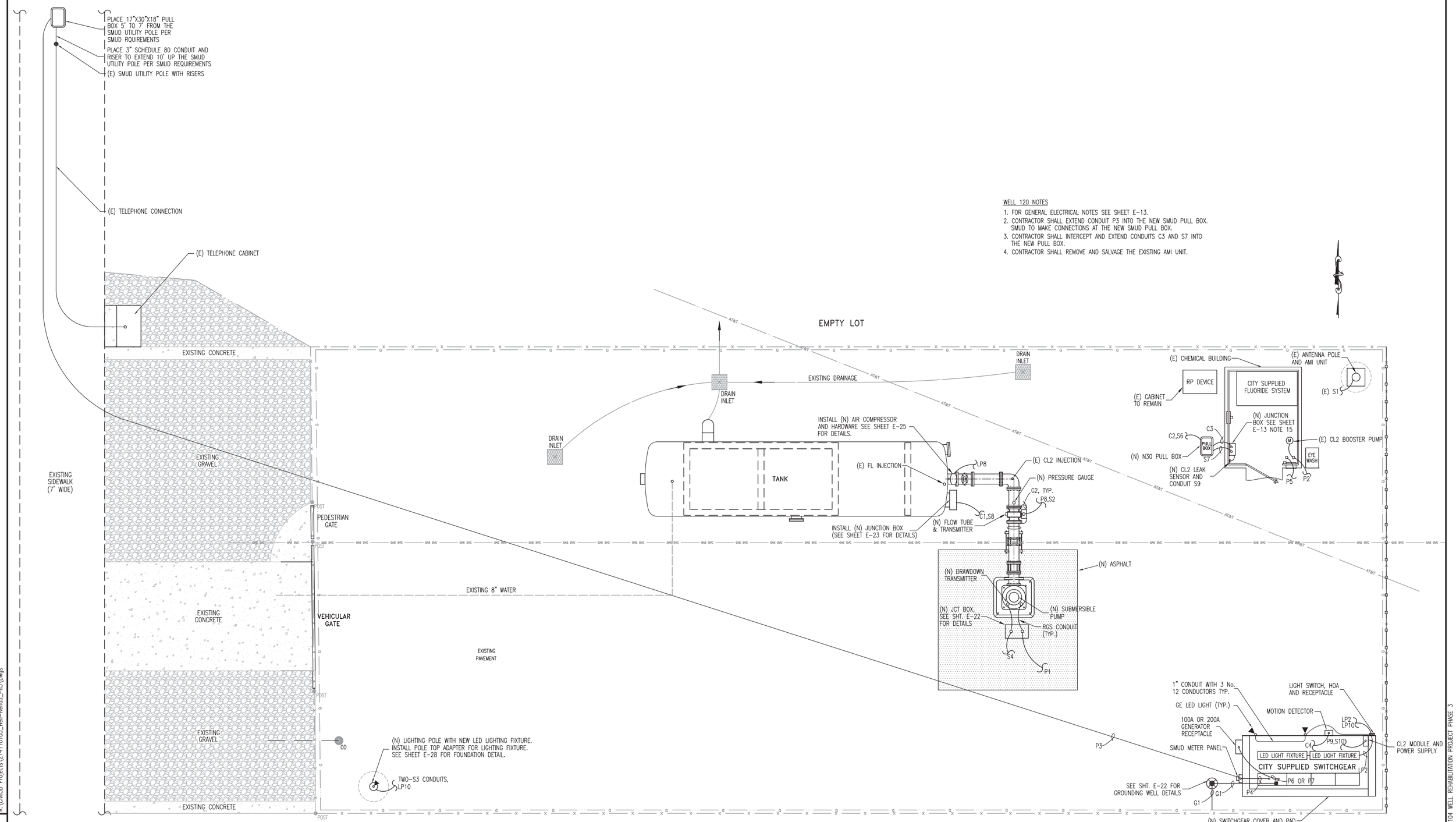

WELL 120 NOTES

1. FOR GENERAL ELECTRICAL NOTES SEE SHEET E-13.
2. CONTRACTOR SHALL EXTEND CONDUIT P3 INTO THE NEW SMUD PULL BOX. SMUD TO MAKE CONNECTIONS AT THE NEW SMUD PULL BOX.
3. CONTRACTOR SHALL INTERCEPT AND EXTEND CONDUITS C3 AND S7 INTO THE NEW PULL BOX.
4. CONTRACTOR SHALL REMOVE AND SALVAGE THE EXISTING AMI UNIT.

WELL REHABILITATION PROJECT PHASE 3
R:\Civil3D Projects\Z14110105_Well-Rehab_Ph3\Dwgs

PN: Z14110104 WELL REHABILITATION PROJECT PHASE 3

PN: Z14110105

REVISIONS			
NO.	DESCRIPTION	DATE	BY

BENCH MARK ELEV. _____
DESCRIPTION:

FIELD BOOK

SCALE:
H: N.A.
V: N.A.

1"
ON ORIGINAL SCALE DRAWING ADJUST SCALED DIMENSIONS IF THIS DOES NOT SCALE AT 1"

CITY OF SACRAMENTO
DEPARTMENT OF UTILITIES

DRAWN BY: E. SALCEDO
DATE: SEP 2014
DESIGNED BY: P. BARNES
R.C.E. NO. E14584 DATE: SEP 2014
CHECKED BY: D. HANSEN
R.C.E. NO. E12512 DATE: SEP 2014

REGISTERED PROFESSIONAL ENGINEER
PAUL R. BARNES
No.E15329
Exp.6/30/15
ELECTRICAL
STATE OF CALIFORNIA

IMPROVEMENT PLANS FOR:
WELL REHABILITATION PROJECT PHASE 3
WELL 120 ELECTRICAL SITE PLAN
2940 BRANCH ST (APN 265-0121024)

GIS GRID NO.
GOT GG3

PN: Z14110105

DWG. NO. E-15
SHEET 18 OF 54

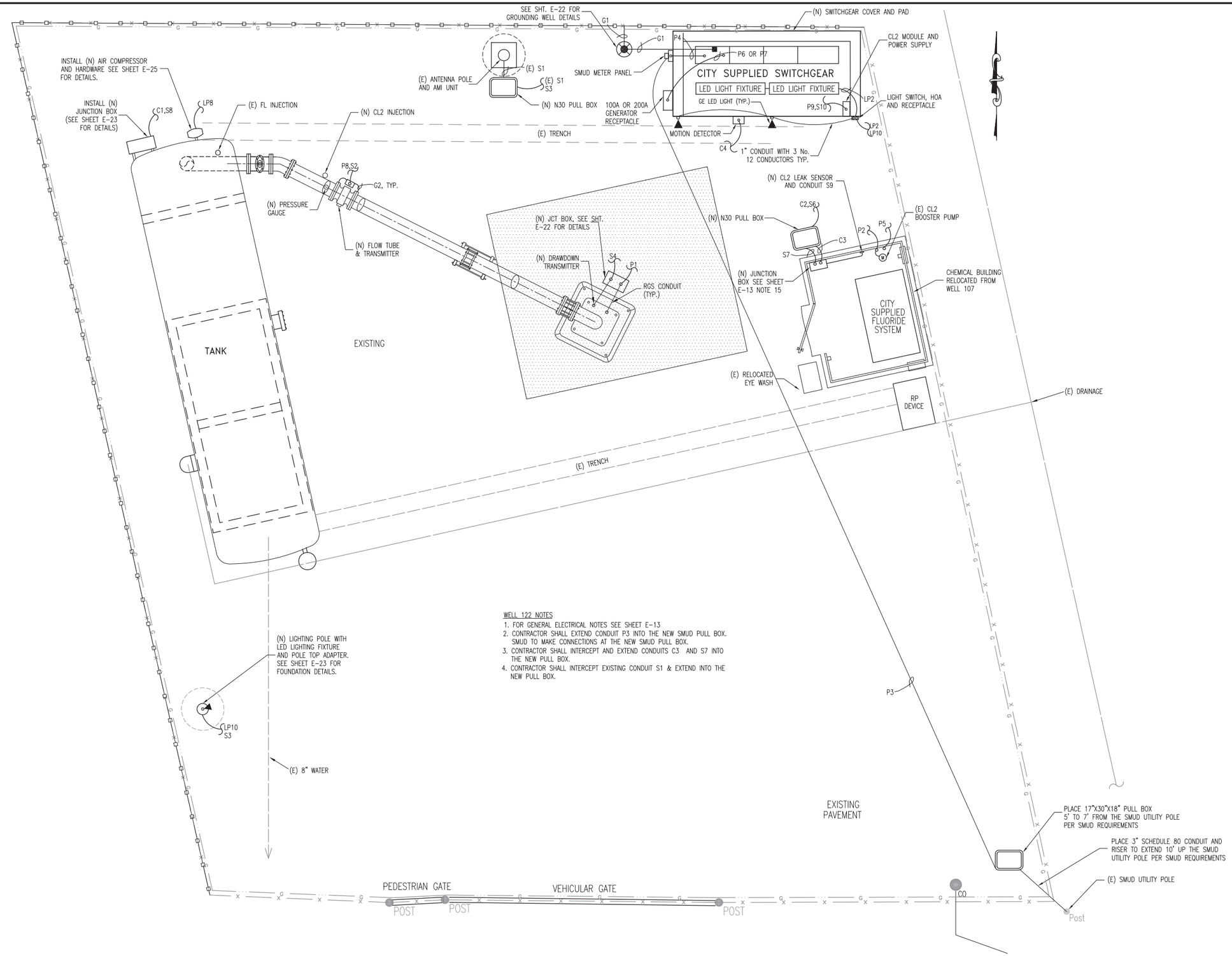

WELL 122 NOTES

1. FOR GENERAL ELECTRICAL NOTES SEE SHEET E-13
2. CONTRACTOR SHALL EXTEND CONDUIT P3 INTO THE NEW SMUD PULL BOX. SMUD TO MAKE CONNECTIONS AT THE NEW SMUD PULL BOX.
3. CONTRACTOR SHALL INTERCEPT AND EXTEND CONDUITS C3 AND S7 INTO THE NEW PULL BOX.
4. CONTRACTOR SHALL INTERCEPT EXISTING CONDUIT S1 & EXTEND INTO THE NEW PULL BOX.

WELL REHABILITATION PROJECT PHASE 3
R:\Civ3D Projects\Z14110105_Well-Rehab_Ph3\Dwgs

PN: Z14110105

REVISIONS			
NO.	DESCRIPTION	DATE	BY

BENCH MARK ELEV. _____
DESCRIPTION:

FIELD BOOK

SCALE:
H: N.A.
V: N.A.

1"
ON ORIGINAL SCALE DRAWING ADJUST SCALED DIMENSIONS IF THIS DOES NOT SCALE AT 1"

CITY OF SACRAMENTO
DEPARTMENT OF UTILITIES

DRAWN BY: E. SALCEDO
DATE: SEP 2014
DESIGNED BY: P. BARNES
R.C.E. NO. E14584 DATE: SEP 2014
CHECKED BY: D. HANSEN
R.C.E. NO. E12512 DATE: SEP 2014

REGISTERED PROFESSIONAL ENGINEER
PAUL R. BARNES
No.E15329
Exp.6/30/15
ELECTRICAL
STATE OF CALIFORNIA

IMPROVEMENT PLANS FOR:
WELL REHABILITATION PROJECT PHASE 3
WELL 122 ELECTRICAL SITE PLAN
NEAR 1551 JULIESSE AVE (APN 265-0191-002)

GIS GRID NO.
GOT GIS
PN: Z14110105

DWG. NO. E-16
SHEET 17 OF 54

PN: Z14110104 WELL REHABILITATION PROJECT PHASE 3

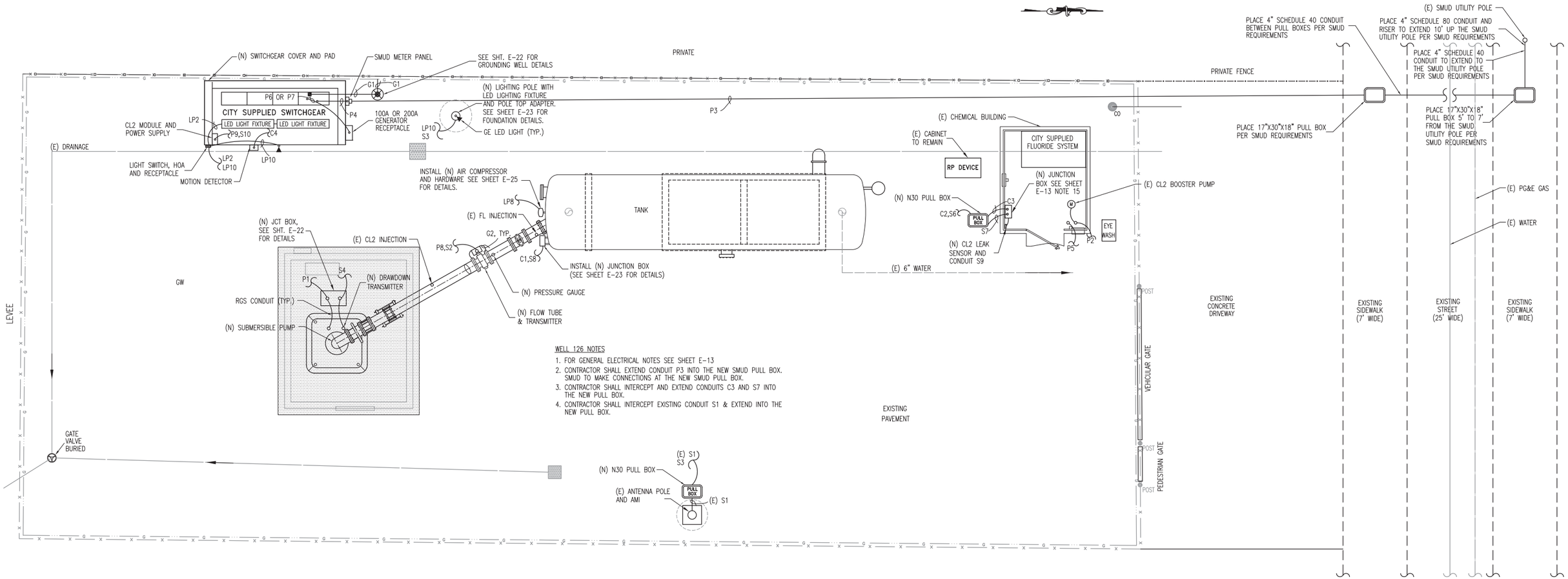

WELL 126 NOTES

1. FOR GENERAL ELECTRICAL NOTES SEE SHEET E-13
2. CONTRACTOR SHALL EXTEND CONDUIT P3 INTO THE NEW SMUD PULL BOX. SMUD TO MAKE CONNECTIONS AT THE NEW SMUD PULL BOX.
3. CONTRACTOR SHALL INTERCEPT AND EXTEND CONDUITS C3 AND S7 INTO THE NEW PULL BOX.
4. CONTRACTOR SHALL INTERCEPT EXISTING CONDUIT S1 & EXTEND INTO THE NEW PULL BOX.

WELL REHABILITATION PROJECT PHASE 3
R:\Civil3D Projects\Z14110105_Well-Rehab_Ph3\Dwgs

PN: Z14110105

REVISIONS			
NO.	DESCRIPTION	DATE	BY

BENCH MARK ELEV. _____
DESCRIPTION:

FIELD BOOK
SCALE:
H: N.A.
V: N.A.

1"
ON ORIGINAL SCALE DRAWING ADJUST SCALED DIMENSIONS IF THIS DOES NOT SCALE AT 1"

CITY OF SACRAMENTO
DEPARTMENT OF UTILITIES

DRAWN BY: E. SALCEDO
DATE: SEP 2014
DESIGNED BY: P. BARNES
R.C.E. NO. E14584 DATE: SEP 2014
CHECKED BY: D. HANSEN
R.C.E. NO. E12512 DATE: SEP 2014

REGISTERED PROFESSIONAL ENGINEER
PAUL R. BARNES
No.E15329
Exp.6/30/15
ELECTRICAL
STATE OF CALIFORNIA

IMPROVEMENT PLANS FOR:
WELL REHABILITATION PROJECT PHASE 3
WELL 126 ELECTRICAL SITE PLAN
NEAR 1324 RIVERA DR (APN 251-0260-005)

GIS GRID NO.
GOT GIS
PN: Z14110105

DWG. NO. E-17
SHEET 18 OF 54

PN: Z14110104 WELL REHABILITATION PROJECT PHASE 3

WELL 129 NOTES

1. FOR GENERAL ELECTRICAL NOTES SEE SHEET E-13
2. CONTRACTOR SHALL EXTEND CONDUIT P3 INTO THE NEW SMUD PULL BOX. SMUD TO MAKE CONECTIONS AT THE NEW SMUD PULL BOX.
3. CONTRACTOR SHALL EXTEND NEW CONDUITS C2 AND S6 INTO EXISTING PULL BOX
4. CONTRACTOR SHALL NTERCEPT EXISTING CONDUIT S1 AND EXTEND INTO THE NEW PULL BOX.

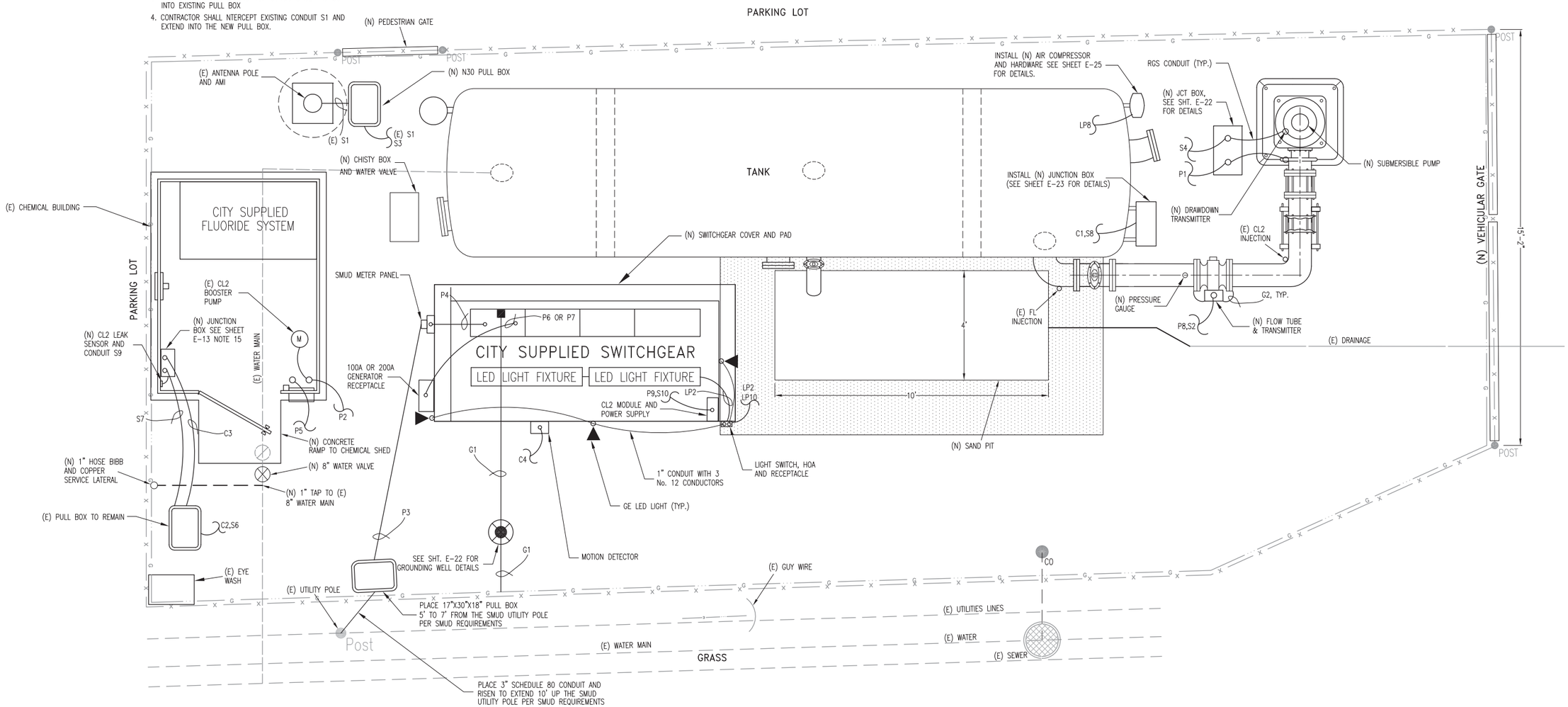

WELL REHABILITATION PROJECT PHASE 3
R:\Civil3D Projects\Z14110105_Well-Rehab_Ph3\Dwgs

PN: Z14110104 WELL REHABILITATION PROJECT PHASE 3

REVISIONS			
NO.	DESCRIPTION	DATE	BY

BENCH MARK ELEV. _____
DESCRIPTION:

FIELD BOOK
SCALE:
H: N.A.
V: N.A.

1"
ON ORIGINAL SCALE DRAWING ADJUST SCALED DIMENSIONS IF THIS DOES NOT SCALE AT 1"

CITY OF SACRAMENTO
DEPARTMENT OF UTILITIES

DRAWN BY: E. SALCEDO
DATE: SEP 2014
DESIGNED BY: P. BARNES
R.C.E. NO. E14584 DATE: SEP 2014
CHECKED BY: D. HANSEN
R.C.E. NO. E12512 DATE: SEP 2014

REGISTERED PROFESSIONAL ENGINEER PAUL R. BARNES No.E15329 Exp.6/30/15 ELECTRICAL STATE OF CALIFORNIA

IMPROVEMENT PLANS FOR:
WELL REHABILITATION PROJECT PHASE 3
WELL 129 ELECTRICAL SITE PLAN
NEAR 3904 RIO LINDA BLVD (APN 251-0051-002)

GIS GRID NO. GOT 63
PN: Z14110105
DWG. NO. E-18
SHEET 18 OF 54
Page 18 of 381

WELL 133 NOTES

1. FOR GENERAL ELECTRICAL NOTES SEE SHEET E-13
2. CONTRACTOR SHALL EXTEND CONDUIT P3 INTO THE NEW SMUD PULL BOX. SMUD TO MAKE CONNECTIONS AT THE NEW SMUD PULL BOX.
3. CONTRACTOR SHALL EXTEND CONDUIT C2 AND S6 INTO EXISTING PULL BOX.
4. CONTRACTOR SHALL INTERCEPT EXISTING CONDUIT S1 & EXTEND INTO THE NEW PULL BOX.

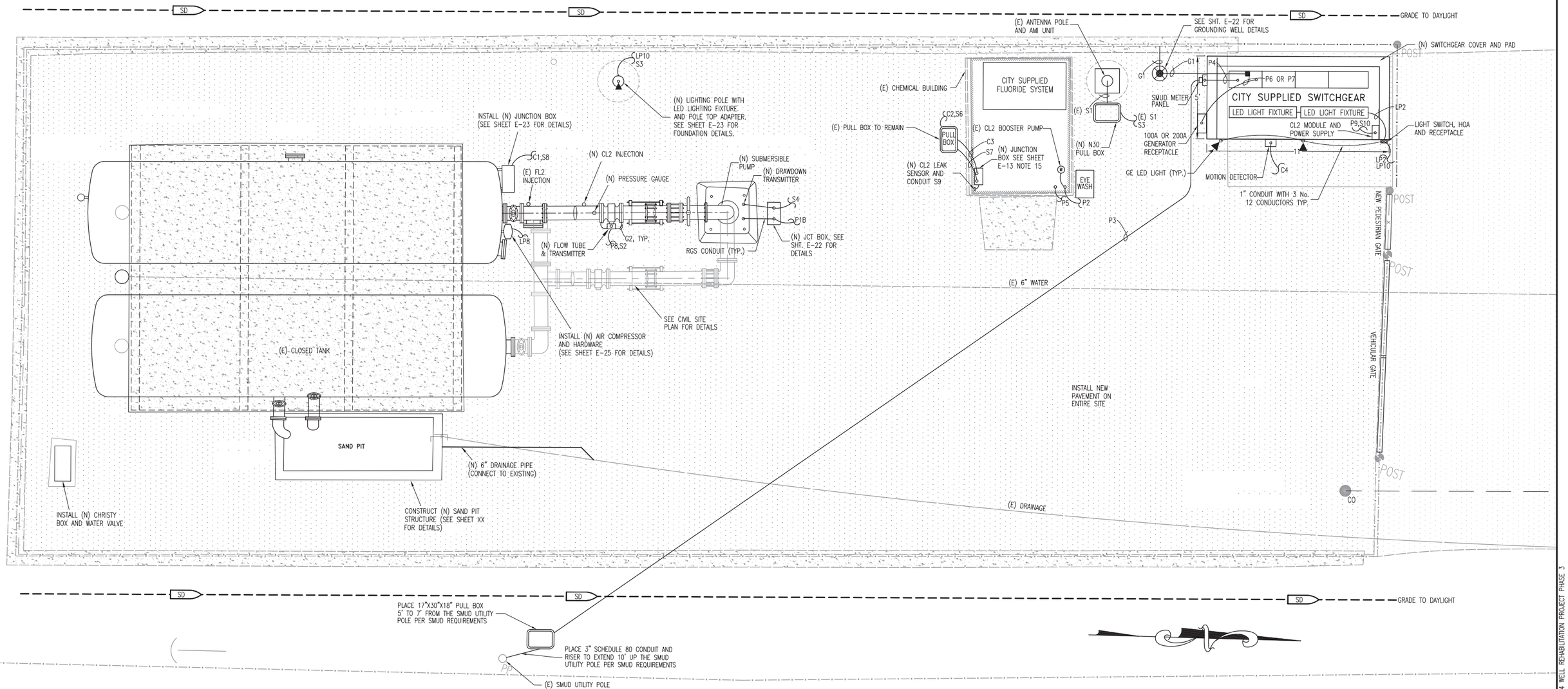

WELL REHABILITATION PROJECT PHASE 3
R:\Civil3D Projects\Z14110105_Well-Rehab_Ph3\Dwgs

PN: Z14110105

REVISIONS			
NO.	DESCRIPTION	DATE	BY

BENCH MARK ELEV. _____
DESCRIPTION:

FIELD BOOK

SCALE:
H: N.A.
V: N.A.

1"
ON ORIGINAL SCALE DRAWING ADJUST SCALED DIMENSIONS IF THIS DOES NOT SCALE AT 1"

CITY OF SACRAMENTO
DEPARTMENT OF UTILITIES

DRAWN BY: E. SALCEDO
DATE: SEP 2014
DESIGNED BY: P. BARNES
R.C.E. NO. E14584 DATE: SEP 2014
CHECKED BY: D. HANSEN
R.C.E. NO. E12512 DATE: SEP 2014

REGISTERED PROFESSIONAL ENGINEER
PAUL R. BARNES
No.E15329
Exp.6/30/15
ELECTRICAL
STATE OF CALIFORNIA

IMPROVEMENT PLANS FOR:
WELL REHABILITATION PROJECT PHASE 3
WELL 133 ELECTRICAL SITE PLAN
NEAR 4600 PELL DRIVE (APN 237-0022-036)

GIS GRID NO. GOT G3
PN: Z14110105
DWG. NO. E-19
SHEET 20 OF 54

PN: Z14110104 WELL REHABILITATION PROJECT PHASE 3

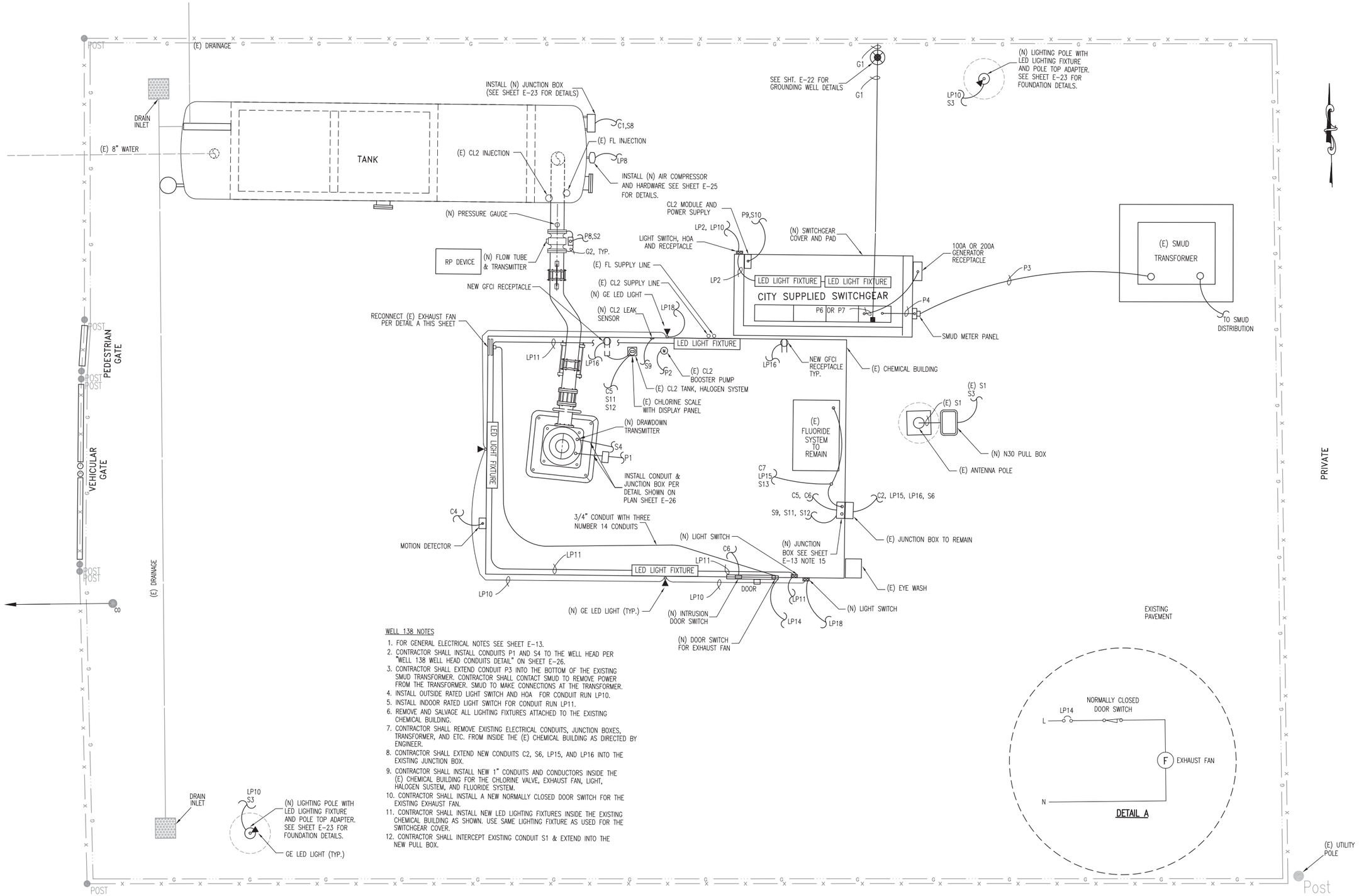

WELL 138 NOTES

1. FOR GENERAL ELECTRICAL NOTES SEE SHEET E-13.
2. CONTRACTOR SHALL INSTALL CONDUITS P1 AND S4 TO THE WELL HEAD PER "WELL 138 WELL HEAD CONDUITS DETAIL" ON SHEET E-26.
3. CONTRACTOR SHALL EXTEND CONDUIT P3 INTO THE BOTTOM OF THE EXISTING SMUD TRANSFORMER. CONTRACTOR SHALL CONTACT SMUD TO REMOVE POWER FROM THE TRANSFORMER. SMUD TO MAKE CONNECTIONS AT THE TRANSFORMER.
4. INSTALL OUTSIDE RATED LIGHT SWITCH AND HOA FOR CONDUIT RUN LP10.
5. INSTALL INDOOR RATED LIGHT SWITCH FOR CONDUIT RUN LP11.
6. REMOVE AND SALVAGE ALL LIGHTING FIXTURES ATTACHED TO THE EXISTING CHEMICAL BUILDING.
7. CONTRACTOR SHALL REMOVE EXISTING ELECTRICAL CONDUITS, JUNCTION BOXES, TRANSFORMER, AND ETC. FROM INSIDE THE (E) CHEMICAL BUILDING AS DIRECTED BY ENGINEER.
8. CONTRACTOR SHALL EXTEND NEW CONDUITS C2, S6, LP15, AND LP16 INTO THE EXISTING JUNCTION BOX.
9. CONTRACTOR SHALL INSTALL NEW 1" CONDUITS AND CONDUCTORS INSIDE THE (E) CHEMICAL BUILDING FOR THE CHLORINE VALVE, EXHAUST FAN, LIGHT, HALOGEN SUSTEM, AND FLUORIDE SYSTEM.
10. CONTRACTOR SHALL INSTALL A NEW NORMALLY CLOSED DOOR SWITCH FOR THE EXISTING EXHAUST FAN.
11. CONTRACTOR SHALL INSTALL NEW LED LIGHTING FIXTURES INSIDE THE EXISTING CHEMICAL BUILDING AS SHOWN. USE SAME LIGHTING FIXTURE AS USED FOR THE SWITCHGEAR COVER.
12. CONTRACTOR SHALL INTERCEPT EXISTING CONDUIT S1 & EXTEND INTO THE NEW PULL BOX.

WELL REHABILITATION PROJECT PHASE 3
R:\Civil3D Projects\Z14110105_Well-Rehab_Ph3\Dwgs

PN: Z14110105

REVISIONS

NO.	DESCRIPTION	DATE	BY

BENCH MARK ELEV. _____
DESCRIPTION:

FIELD BOOK

SCALE:
H: N.A.
V: N.A.

1"
ON ORIGINAL SCALE DRAWING ADJUST SCALED DIMENSIONS IF THIS DOES NOT SCALE AT 1"

CITY OF SACRAMENTO
DEPARTMENT OF UTILITIES

DRAWN BY: E. SALCEDO
DATE: SEP 2014
DESIGNED BY: P. BARNES
R.C.E. NO. E14584 DATE: SEP 2014
CHECKED BY: D. HANSEN
R.C.E. NO. E12512 DATE: SEP 2014

REGISTERED PROFESSIONAL ENGINEER PAUL R. BARNES No.E15329 Exp.6/30/15 ELECTRICAL STATE OF CALIFORNIA

IMPROVEMENT PLANS FOR:
WELL REHABILITATION PROJECT PHASE 3
WELL 138 ELECTRICAL SITE PLAN
4020 FELL STREET (APN 237-0311-011)

GIS GRID NO. GOT G63
PN: Z14110105
DWG. NO. E-20
SHEET 23 OF 54

PN: Z14110104 WELL REHABILITATION PROJECT PHASE 3

CONDUIT AND WIRE SCHEDULE

CONDUIT DESIGNATION	CONDUIT SIZE	PHASE SIZE	NEUTRAL SIZE	GROUND SIZE	CONTROL WIRING	FROM	TO	NOTES
P1	2"	3-1/0		1-#6	2-#12	MCC	WELL PUMP MOTOR	POWER AND ALARM
P1A	2"	3-2/0		1-#4	2-#12	MCC	WELL PUMP MOTOR	POWER AND ALARM
P1B	2 1/2"	3-4/0		1-#4	2-#12	MCC	WELL PUMP MOTOR	POWER AND ALARM
P2	1"	3-#12		1-#12		MCC	CHEMICAL BUILDING	2 hp CHLORINE BOOSTER PUMP
P3	2 1/2"	3-4/0		1-#2		SMUD SERVICE	SMUD METER	
P4	2 1/2"	3-4/0		1-#2		SMUD METER	MAIN BREAKER	
P5	1 "	3-#12	3-#12	3-#12	2-#12	LIGHTING PANEL	CHEMICAL BUILDING	SEE NOTE 1 BELOW
P6	2"	3-4/0		1-#6		GENERATOR BREAKER	200A GENERATOR RECEPT.	
P7	2"	3-#2		1-#8		GENERATOR BREAKER	100A GENERATOR RECEPT.	
P8		1-#12	1-#12	1-#12		CONTROL PANEL	FLOW METER TRANSMITTER	POWER TO FLOW METER
P9	1 "	1-#12	1-#12	1-#12		CONTROL PANEL	CHLORINE MODULE PS	POWER TO CL2 MODULE PS
G1				1-1/0 BCW		MCC GROUND	GROUND WELL/FENCE	CAL WELD OR HI PRESS WIRES
G2				1-#12		FLOW METER	GROUNDING RINGS	FLOW METER GROUND
LP2	1"	1-#12	1-#12	1-#12		LIGHTING PANEL	SWITCHGEAR LIGHT & REC.	
LP8	1"	1-#12	1-#12	1-#12		LIGHTING PANEL	AIR COMPRESSOR	
LP10	1"	1-#12	1-#12	1-#12		LIGHTING PANEL	AREA LIGHTING	
LP11	1"	1-#12	1-#12	1-#12		LIGHTING PANEL	CHEMICAL BUILDING	WELL 138 ONLY
LP14	1"	1-#12	1-#12	1-#12		LIGHTING PANEL	EXHAUST FAN	WELL 138 ONLY
LP15	1"	1-#12	1-#12	1-#12		LIGHTING PANEL	FLUORIDE SYSTEM	WELL 138 ONLY
LP16	1"	1-#12	1-#12	1-#12		LIGHTING PANEL	RECEPTACLE	WELL 138 ONLY
LP18	1"	1-#12	1-#12	1-#12		LIGHTING PANEL	CHEMICAL BUILDING	WELL 138 ONLY
C1	1"				2-#14	PRESSURE SWITCH	MCC	
C2	1"				12-#14	CONTROL PANEL	PULL BOX OR JCT BOX	DIGITAL SIGNALS
C3	1"				12-#14	PULL BOX OR JCT BOX	CHEMICAL BUILDING	DIGITAL SIGNALS
C4	3/4"				4-#14	MOTION DETECTOR	CONTROL PANEL	POWER AND DIGITAL INPUT
C5	1"				2-#14	JUNCTION BOX	HALOGEN SYSTEM	DIGIITAL INPUT
C6	1"				2-#14	JUNCTION BOX	INTRUSION SWITCH	
C7	1"				8-#14	JUNCTION BOX	FLUORIDE SYSTEM	
S1	1 1/2"				ANTENNA & AMI CABLE	CONTROL PANEL	ANTENNA AND AMI	AMI IS LOCATED ON ANTENNA POLE
S2	1/2"				CAT 6 CABLE	FLOW METER TX	ETHERNET SWITCH	
S3	1 1/2"					CONTROL PANEL	POLE	FUTURE
S4	3/4"				MFR CABLE	CONTROL PANEL	DRAWDOWN TRANSMITTER	USE CABLE FROM MFR
S5					CAT 6 CABLE	DIGITAL POWER METER	ETHERNET SWITCH	
S6	1"				3-#16 PAIR	CONTROL PANEL	PULL BOX OR JCT BOX	ANALOG SIGNALS
					2-24 AWG TWSH			
S7	1"				3-#16 PAIR	PULL BOX OR JCT BOX	CHEMICAL BUILDING	ANALOG SIGNALS
					2-24 AWG TWSH			
S8	1"				2-#16 PAIR	PRESSURE TX	CONTROL PANEL	1 PAIR IS A SPARE
S9	1"				1-#16 PAIR	CHLORINE SENSOR	JUNCTION BOX	
S10	1"				2-No.14 2-#16 PAIR	CL2 MODULE/PS	CONTROL PANEL	1 PAIR IS A SPARE
					1-24 AWG TWSH			
S11	1"				2-24 AWG TWSH	JUNCTION BOX	HALOGEN SYSTEM	
S12	1"				1-#16 PAIR	JUNCTION BOX	CHLORINE SCALE	
S13	1"				1-#16 PAIR	JUNCTION BOX	FLUORIDE SYSTEM	

NOTES

1. CONDUIT P5 PROVIDES POWER TO THE FLUORIDE SYSTEM, PORTABLE HEATER, AND CHEM BUILDING EXHAUST FAN, LIGHTS, AND RECEPTACLES USING LIGHTING PANEL CIRCUITS LP4, LP6, AND LP12 EXCEPT FOR WELL 138. IN ADDITION, CONDUIT P5 PROVIDES THE FLUORIDE PUMP RUN SIGNAL BACK TO THE PLC.
2. THE NEW AMI CABLE SHALL MATCH THE EXISTING AND SHALL BE A JACKETED 3 CONDUCTOR 12 AWG RATED SHIELDED CABLE.
3. THE 24 AWG TWSH SHALL BE BELDON CABLE 9501.

LIGHTING PANEL "LP" SCHEDULE

VOLTS: 120/240
PHASE: SINGLE
WIRE: 3

BUS: 100A
MAIN: 60A 2-POLE
AIC RATING 10,000 A

LOAD DESCRIPTION	LOAD (VA)	CB AMPS	CKT No.	PHASE A	PHASE B	CKT No.	CB AMPS	LOAD (VA)	LOAD DESCRIPTION
MCC HEATER AND FAN	150	15	1			2	20	452	SWITCHGEAR COVER LIGHT AND RECEPTACLE
MCC HEATER AND FAN	150	15	3			4	20	720	CHEMICAL BUILDING PORTABLE HEATER
MCC HEATER AND FAN	150	15	5			6	20	720	CHEM BUILDING FAN, RECEPTACLES, & LIGHT
MCC HEATER AND FAN	150	15	7			8	20	720	AIR COMPRESSOR
PLC/UPS	850	15	9			10	20	270	AREA LIGHTING
WELL 138 INSIDE BUILDING LIGHTING	138	15	11			12	20	180	FLUORIDE SYSTEM
(E) AMI UNIT	100	15	13			14	20	520	WELL 138 EXHAUST FAN
WELL 138 FLUORIDE SYSTEM	180	15	15			16	20	360	WELL 138 RECEPTACLE
SPARE	500	15	17			18	20	270	WELL 138 BUILDING LIGHT
	2,368							4,212	
	TOTAL		TOTAL LOAD					* PROVIDE ISOLATED NEUTRAL BUS	
	6,580		6.58 KVA/240V = 27.4 AMP					* PROVIDE GROUND BUS	

NOTES

1. THE AREA LIGHTING IS FED FROM THE LIGHTING PANEL THROUGH THE PLC SEE SHT E-9.
2. BREAKER LP6 WILL BE USED TO POWER THE HALOGEN SYSTEM AND CHLORINE SCALE, EXCEPT AT WELL 138
3. LOAD ON LP10 WILL VARY WITH NUMBER OF LIGHTING FIXTURES AT EACH WELL. EACH LIGHTING FIXTURE IS RATED AT 90W.

CONDUIT INSTALLATION TABLE

CONDUIT INSTALLATION	CONDUIT TYPE
EXPOSED CONDUIT (INDOOR & OUTDOOR)	*RIGID GALVANIZED STEEL CONDUIT.*
CONDUIT IN CONCRETE SLAB	*RIGID GALVANIZED STEEL CONDUIT.*
UNDERGROUND CONDUIT	*RIGID GALVANIZED STEEL PCV COATED CONDUIT WHERE THE CONDUIT IS DIRECTLY IN CONTACT WITH THE EARTH OR SCHEDULED 40 PVC CONDUIT WITH CONCRETE ENCASEMENT MINIMUM OF 4" ALL AROUND FOR HORIZONTAL RUNS ONLY.*
CONDUIT IN DUCT BANK	*SCHEDULE 40 PVC CONDUIT WITH CONCRETE ENCASEMENT MINIMUM OF 4" ALL AROUND FOR HORIZONTAL RUNS ONLY.*
VERTICAL OR HORIZONTAL SWEEPS, RISERS, OR STUBS INTO UNDERGROUND BOXES	*RIGID GALVANIZED STEEL PVC COATED CONDUIT FOR ENTIRE SWEEP, UNDERGROUND RUNS 5' PRIOR TO RISER OR STUB, AND 6" ABOVE FINISHED GRADE. CONDUIT 6" ABOVE FINISHED GRADE SHALL BE INTALLED AS EXPOSED CONDUIT.*
BOTTOM ENTRANCE TO SWITCHGEAR, DISTRIBUTION PANEL, MCC & ETC.	*RIGID GALVANIZED STEEL PVC COATED CONDUIT.*
SIDE OR TOP ENTRANCE OF SWITCHGEAR,DISTRIBUTION PANEL, MCC, & ETC.	*RIGID GALVANIZED STEEL CONDUIT.*
CONDUIT EXPOSED TO CORROSIVE ENVIRONMENT (SEWER WET WELL)	*TYPE 316 STAINLESS STEEL CONDUIT*
PRIMARY & SECONDARY OF THE SMUD TRANSFORMER	*PER SMUD STANDARD SPECIFICATIONS.*
BOTTOM ENTRANCE FROM SMUD TRANSFORMER TO CITY MAIN SWITCHGEAR	*PVC CONDUIT WITH CONCRETE ENCASEMENT MINIMUM OF 4" ALL AROUND.*
MOTOR CONDUIT BOX TO RIGID WIREWAY SYSTEM	*FLEXIBLE LIQUID TIGHT METAL CONDUIT.*
DOOR SWITCH SENSOR TO RIGID WIREWAY SYSTEM	*FLEXIBLE LIQUID TIGHT METAL CONDUIT.*
CONDUIT FROM JUNCTION BOX TO OUTSIDE BUILDING LIGHTS	*RIGID GALVANIZED CONDUIT.*
CONDUIT FROM JUNCTION BOX TO TRASHRACK LIGHTS	*FLEXIBLE LIQUID TIGHT METAL CONDUIT.*
RISERS OR CONDUIT STUBS RISING FROM CONCRETE DUXT BANK	*RIGID GALVANIZED STEEL PVC COATED CONDUIT.*
EQUIPMENT SUBJECT TO VIBRATION	*FLEXIBLE LIQUID TIGHT METAL CONDUIT.*

NOTES:

1. *ALL ACCEPTABLE CONDUIT MATERIALS ARE SPECIFIED IN SPECIFICATION 16110 SECTION 2.02A.*
2. *ANY CONDUIT NOT COVERED IN THE ABOVE CATAGORIES SHALL BE RIGID GALVANIZED STEEL PVC COATED.*
3. *ALL UNDERGROUND PVC CONDUITS SHALL BE ENCASED IN RED CONCRETE.*
4. *CONTRACTOR SHALL PLACE A 6" WIDE ELECTRICAL CAUTION WARNING TAPE IN ALL TRENCHES 12" ABOVE CONCRETE OR AS DIRECTED BY THE ENGINEER.*

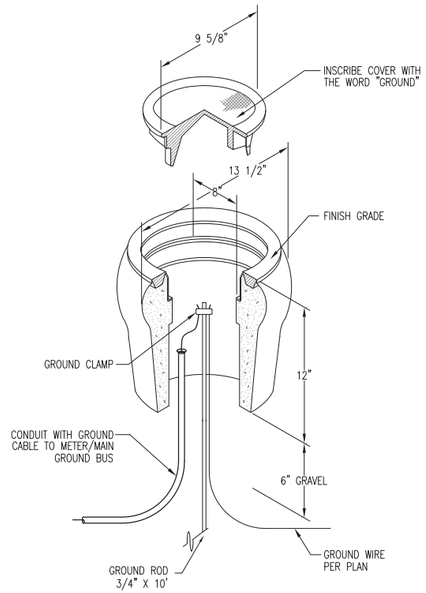

GROUND WELL INSTALLATION DETAIL

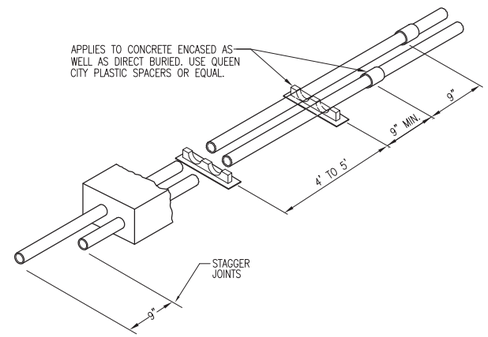

SPACERS AND JOINTS INSTALLATION DETAIL

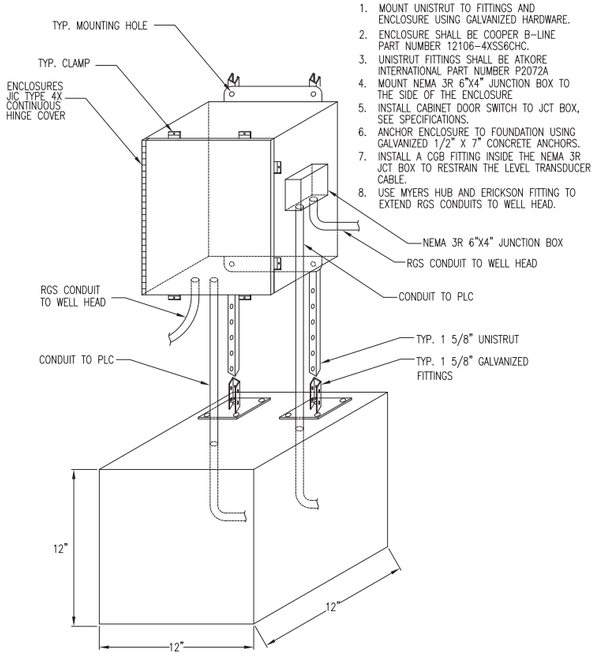

NOTES:

1. MOUNT UNISTRUT TO FITTINGS AND ENCLOSURE USING GALVANIZED HARDWARE.
2. ENCLOSURE SHALL BE COOPER B-LINE PART NUMBER 12106-4XSS6CHC.
3. UNISTRUT FITTINGS SHALL BE ATKORE INTERNATIONAL PART NUMBER P2072A
4. MOUNT NEMA 3R 6"X4" JUNCTION BOX TO THE SIDE OF THE ENCLOSURE
5. INSTALL CABINET DOOR SWITCH TO JCT BOX, SEE SPECIFICATIONS.
6. ANCHOR ENCLOSURE TO FOUNDATION USING GALVANIZED 1/2" X 7" CONCRETE ANCHORS.
7. INSTALL A CGB FITTING INSIDE THE NEMA 3R JCT BOX TO RESTRAIN THE LEVEL TRANSDUCER CABLE.
8. USE MYERS HUB AND ERICKSON FITTING TO EXTEND RGS CONDUITS TO WELL HEAD.

WELLHEAD JUNCTION BOX DETAIL

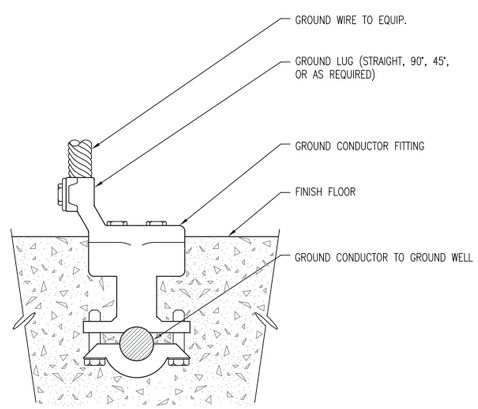

NOTE:
BOLTS SHALL BE INSERTED IN BOLT HOLES BEFORE CONNECTOR IS EMBEDDED.

GROUNDING INSERT DETAIL

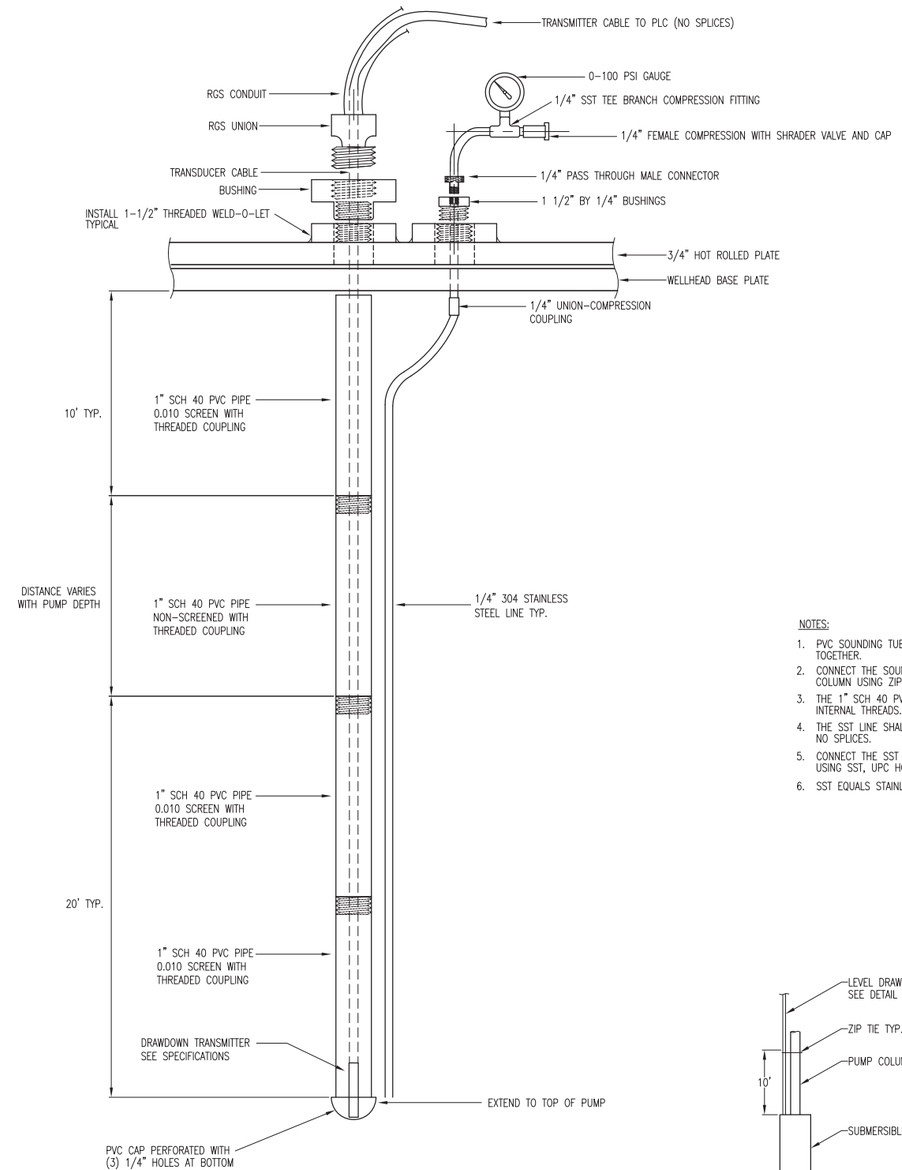

NOTES:

1. PVC SOUNDING TUBE SHALL BE THREADED TOGETHER.
2. CONNECT THE SOUNDING TUBE TO THE PUMP COLUMN USING ZIP TIES, EVERY 5 FEET.
3. THE 1" SCH 40 PVC PIPE SHALL HAVE INTERNAL THREADS.
4. THE SST LINE SHALL BE ONE PIECE WITH NO SPLICES.
5. CONNECT THE SST LINE TO THE SOUNDING TUBE USING SST, UPC HOSE CLAMP, EVERY 5 FEET.
6. SST EQUALS STAINLESS STEEL.

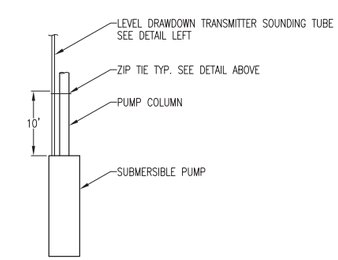

ELEVATION

SOUNDING TUBE FOR DRAWDOWN TRANSMITTER DETAIL

WELL REHABILITATION PROJECT PHASE 3
R:\Civil3D Projects\Z14110105_Well-Rehab_Ph3\Dwgs

PN: Z14110105

PN: Z14110104 WELL REHABILITATION PROJECT PHASE 3

REVISIONS			
NO.	DESCRIPTION	DATE	BY

BENCH MARK ELEV. _____
DESCRIPTION:

FIELD BOOK

SCALE:
H: N.A.
V: N.A.

1"
ON ORIGINAL SCALE DRAWING ADJUST SCALED DIMENSIONS IF THIS DOES NOT SCALE AT 1"

CITY OF SACRAMENTO
DEPARTMENT OF UTILITIES

DRAWN BY: E. SALCEDO
DATE: SEP 2014
DESIGNED BY: P. BARNES
R.C.E. NO. E14584 DATE: SEP 2014
CHECKED BY: D. HANSEN
R.C.E. NO. E12512 DATE: SEP 2014

REGISTERED PROFESSIONAL ENGINEER PAUL R. BARNES No.E15329 Exp.6/30/15 ELECTRICAL STATE OF CALIFORNIA

IMPROVEMENT PLANS FOR:
WELL REHABILITATION PROJECT PHASE 3

ELECTRICAL STANDARD DETAILS

GIS GRID NO.
GOT 663

PN: Z14110105

DWG. NO. E-22
SHEET 23 OF 54

NOTES:
1. CONTRACTOR SHALL PROVIDE ANCHOR BOLTS.

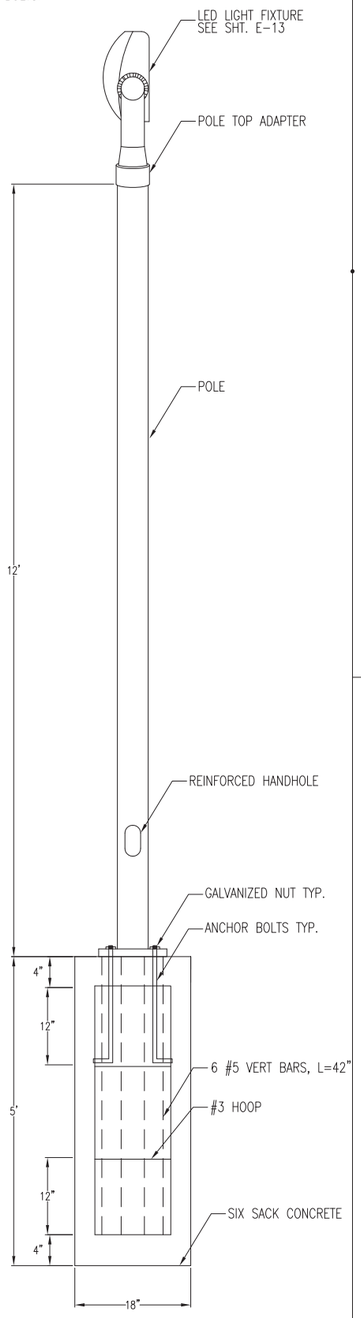

LIGHT POLE FOUNDATION
BASE DETAIL

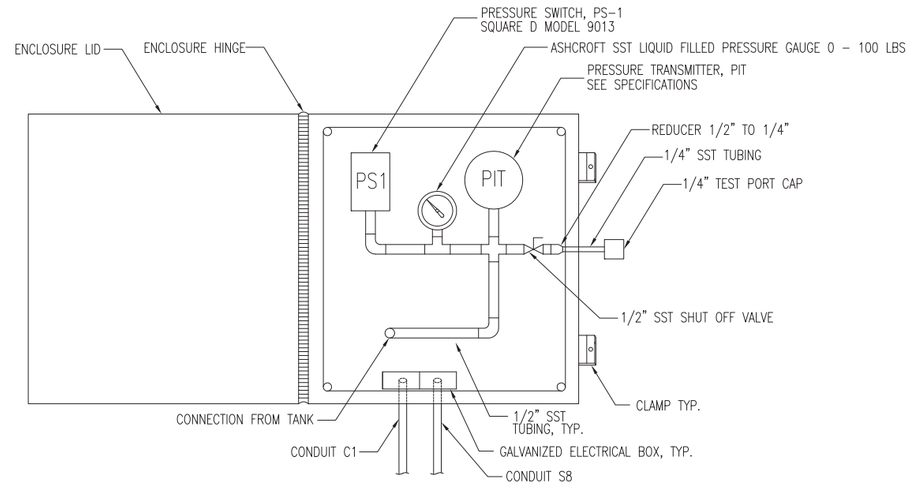

NEMA 4X NON-METALLIC JUNCTION BOX
ENCLOSURE DETAIL

NOTES:
1. PAINT ENCLOSURE TO MATCH EXISTING TANK
2. SST = STAINLESS STEEL
3. CONTRACTOR SHALL ATTACH THE PRESSURE SWITCH, PRESSURE TRANSDUCER AND TUBING TO THE BACK PAN USING STAINLESS STEEL BRACKETS AND HARDWARE.
4. CONTRACTOR SHALL SEAL ALL OPENINGS IN THE ENCLOUSURE USING COMPRESSION SEAL FITTINGS AND/OR CONDUIT SEAL FITTINGS.
5. CONTRACTOR SHALL WELD NEW STEEL BRACKETS TO TO THE TANK AND CONNECT TO THE ENCLOSURE. PAINT BRACKETS TO MATCH TANK.

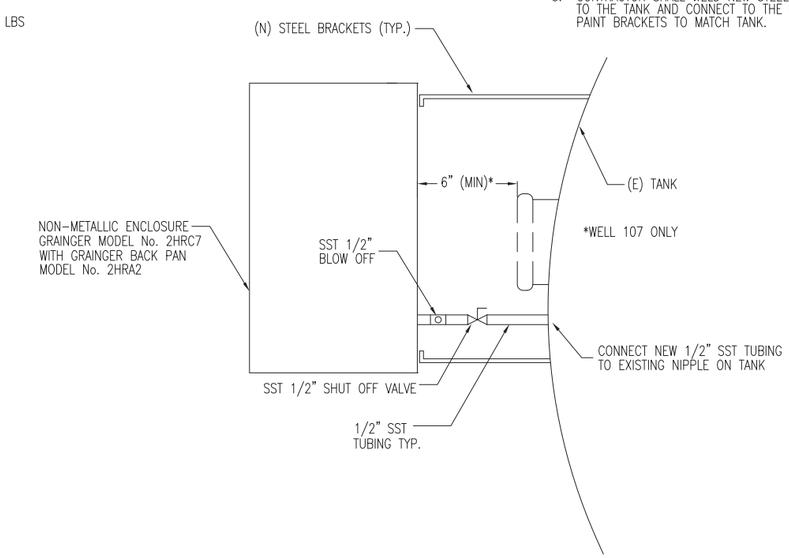

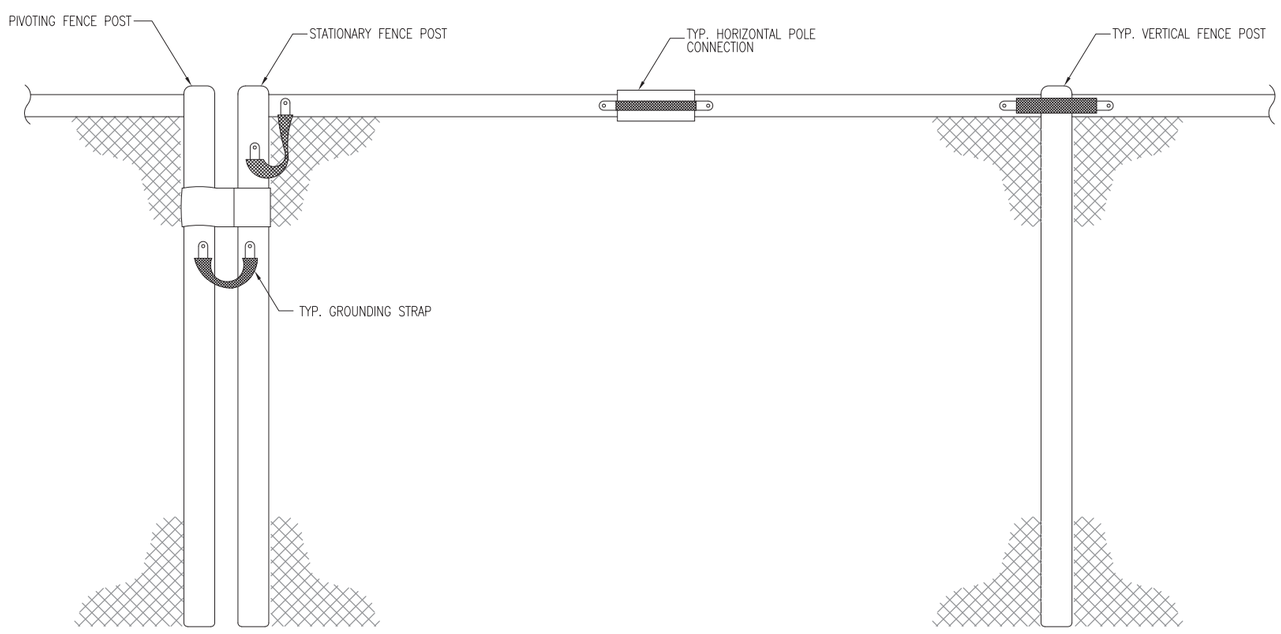

FENCE GROUNDING
DETAIL

NOTES:
1. CONTRACTOR SHALL PROVIDE A GROUND STRAP AT EVERY VERTICAL FENCE POST.
2. CONTRACTOR SHALL PROVIDE A GROUND STRAP AT EVERY HORIZONTAL POLE CONNECTION AND VERTICAL COUPLING.
3. GROUNDING STRAP SHALL BE GRAINGER MODEL 5LNJ7 OR EQUAL

WELL REHABILITATION PROJECT PHASE 3
R:\Civil3D Projects\Z14110105_Well-Rehab_Ph3\Dwgs

PN: Z14110104 WELL REHABILITATION PROJECT PHASE 3

PN: Z14110105

REVISIONS			
NO.	DESCRIPTION	DATE	BY

BENCH MARK ELEV. _____
DESCRIPTION:

FIELD BOOK
SCALE:
H: N.A.
V: N.A.

1"
ON ORIGINAL SCALE DRAWING ADJUST SCALED DIMENSIONS IF THIS DOES NOT SCALE AT 1"

CITY OF SACRAMENTO
DEPARTMENT OF UTILITIES

DRAWN BY: E. SALCEDO
DATE: SEP 2014
DESIGNED BY: P. BARNES
R.C.E. NO. E14584 DATE: SEP 2014
CHECKED BY: D. HANSEN
R.C.E. NO. E12512 DATE: SEP 2014

REGISTERED PROFESSIONAL ENGINEER
PAUL R. BARNES
No.E15329
Exp.6/30/15
ELECTRICAL
STATE OF CALIFORNIA

IMPROVEMENT PLANS FOR:
WELL REHABILITATION PROJECT PHASE 3

ELECTRICAL STANDARD DETAILS

GIS GRID NO.
COT GIS
PN: Z14110105

DWG. NO. E-23
SHEET 23 OF 54

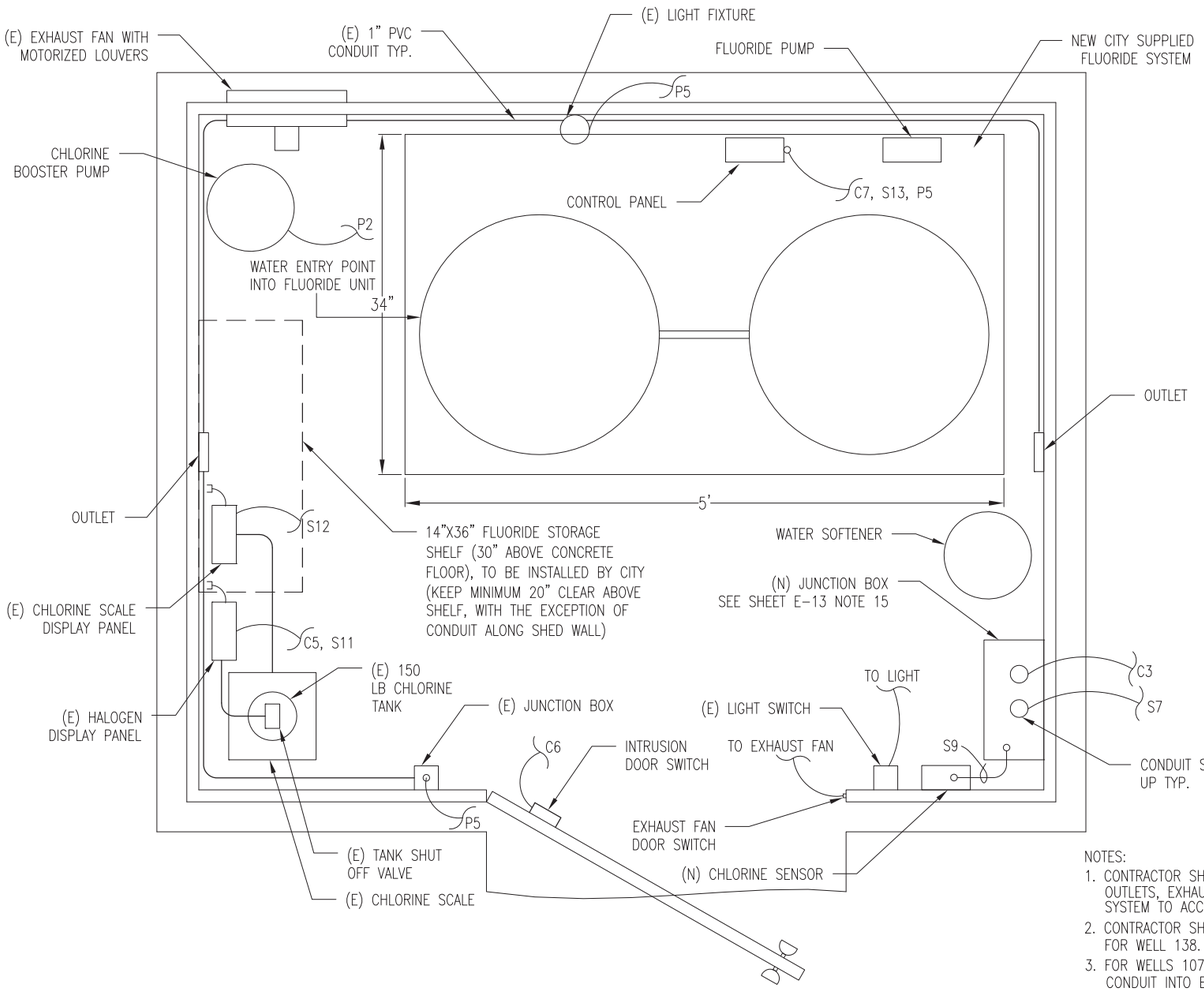

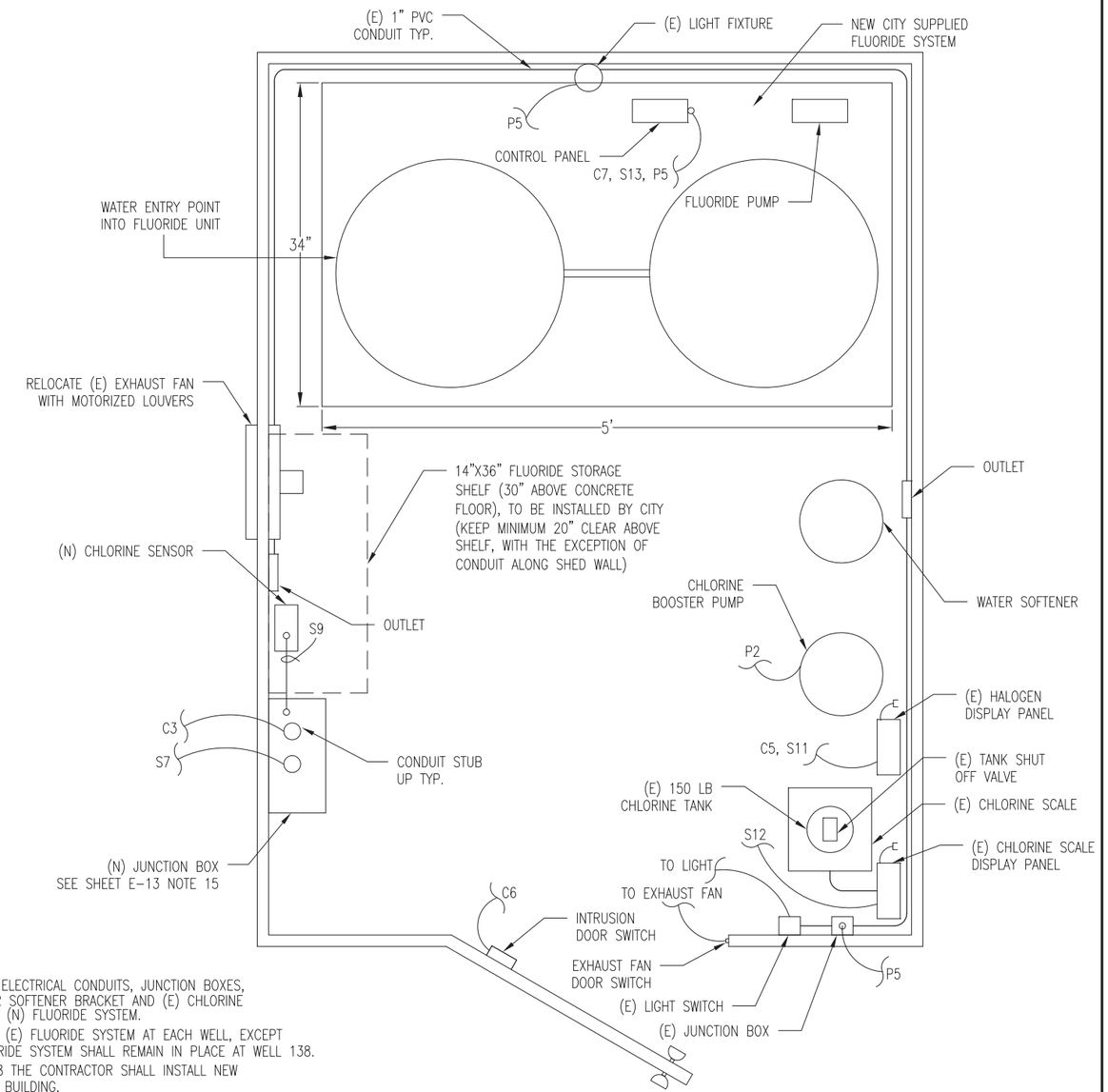

NOTES:

1. CONTRACTOR SHALL RELOCATE ELECTRICAL CONDUITS, JUNCTION BOXES, OUTLETS, EXHAUST FAN, WATER SOFTENER BRACKET AND (E) CHLORINE SYSTEM TO ACCOMMODATE THE (N) FLUORIDE SYSTEM.
2. CONTRACTOR SHALL DEMO THE (E) FLUORIDE SYSTEM AT EACH WELL, EXCEPT FOR WELL 138. THE (E) FLUORIDE SYSTEM SHALL REMAIN IN PLACE AT WELL 138.
3. FOR WELLS 107, 122 AND 138 THE CONTRACTOR SHALL INSTALL NEW CONDUIT INTO EACH CHEMICAL BUILDING.
4. LAYOUT WITHIN THE CHEMICAL SHED SHALL BE DEPENDENT ON LOCATION OF WATER ENTRY INTO SHED. IF WATER ENTRY POINT IS ON OPPOSITE SIDE OF CHEMICAL SHED FROM WHAT IS SHOWN ON LAYOUT, LAYOUT SHALL BE FLIPPED TO ACCOMMODATE.
5. WALL PLUGS SHALL BE INSTALLED ON CHEMICAL SHED WHERE OLD PLC BRACKETS ARE REMOVED TO PLUG THE HOLES.
6. THE (E) EXHAUST FAN SHALL BE CONNECTED TO TURN ON WHEN THE DOOR IS OPENED.
7. THE CONTRACTOR SHALL CONNECT THE EXISTING OUTLETS, EXHAUST FAN, LIGHTS, AND FLUORIDE SYSTEM TO CONDUIT RUN P5 USING NEW CONDUCTORS AND THE EXISTING CONDUITS WITHIN THE BUILDING.

CHEMICAL BUILDING EQUIPMENT
HORIZONTAL LAYOUT

CHEMICAL BUILDING EQUIPMENT
VERTICLE LAYOUT

WELL REHABILITATION PROJECT PHASE 3
R:\Civil3D Projects\Z14110105_Well-Rehab_Ph3\Dwgs

PN: Z14110104 WELL REHABILITATION PROJECT PHASE 3

PN: Z14110105

REVISIONS			
NO.	DESCRIPTION	DATE	BY

BENCH MARK
DESCRIPTION:
ELEV. _____

FIELD BOOK
SCALE:
H: N.A.
V: N.A.

1"
ON ORIGINAL SCALE DRAWING ADJUST SCALED DIMENSIONS IF THIS DOES NOT SCALE AT 1"

CITY OF SACRAMENTO
DEPARTMENT OF UTILITIES

DRAWN BY: E. SALCEDO
DATE: SEP 2014
DESIGNED BY: P. BARNES
R.C.E. NO. E14584 DATE: SEP 2014
CHECKED BY: D. HANSEN
R.C.E. NO. E12512 DATE: SEP 2014

REGISTERED PROFESSIONAL ENGINEER
PAUL R. BARNES
No.E15329
Exp.6/30/15
ELECTRICAL
STATE OF CALIFORNIA

IMPROVEMENT PLANS FOR:
WELL REHABILITATION PROJECT PHASE 3

ELECTRICAL STANDARD DETAILS

GIS GRID NO.
GOT GRID NO.
PN: Z14110105

DWG. NO. E-24
SHEET 23 OF 54

NOTES:

1. CONTRACTOR SHALL REMOVE ALL PIPING CONNECTED TO THE EXISTING AIR RELEASE VALVE. CONTRACTOR SHALL INSTALL NEW 3/4" GALVANIZED STEEL PIPE AS SHOWN IN THE "BACK OF TANK" DETAIL AND CONNECT TO THE EXISTING TANK NIPPLE.
2. CONTRACTOR SHALL REMOVE AND SALVAGE THE EXISTING AIR RELEASE VALVE. CONTRACTOR SHALL INSTALL A NEW CRISPIN AIR RELEASE VALVE MODEL AR 8 OR APPROVED EQUAL. CONTRACTOR SHALL REUSE THE EXISTING SCREEN.

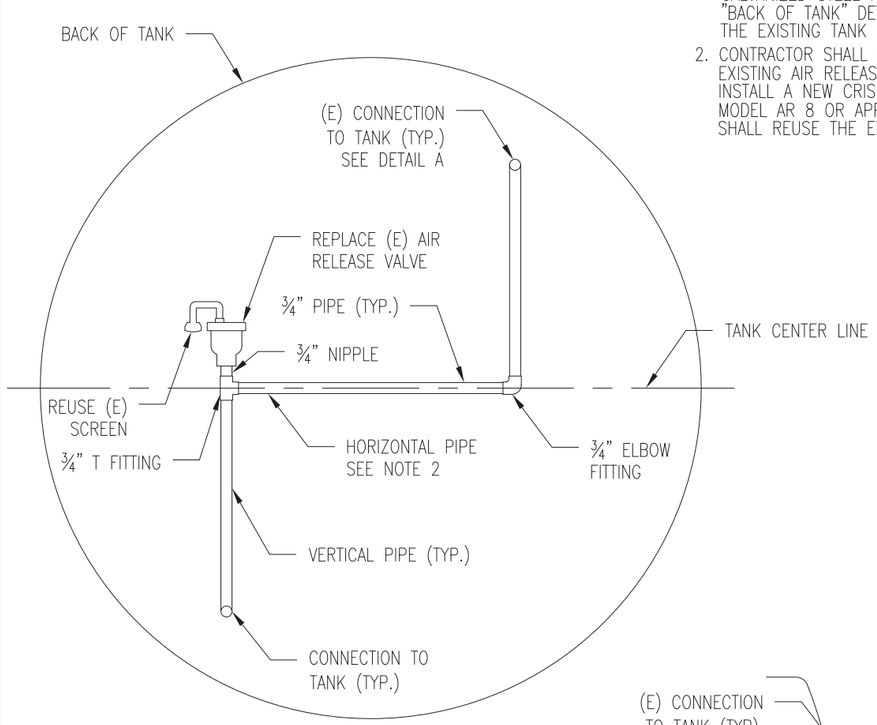

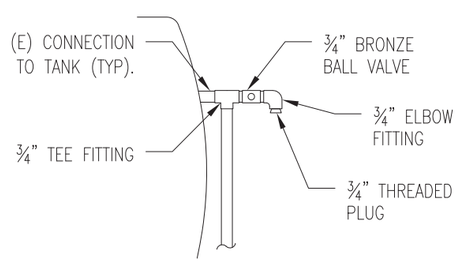

DETAIL A

BACK OF TANK
DETAIL

NOTES:

1. ALL PIPE AND FITTINGS SHALL BE GALVANIZED STEEL PIPE, UNLESS OTHERWISE NOTED.
2. SST = STAINLESS STEEL
3. CONTRACTOR SHALL MOUNT THE COMPRESSOR PROBE 12" ABOVE THE CENTERLINE OF THE HYDROPNEUMATIC TANK.
4. CONTRACTOR SHALL MODIFY THE PROBE WELL AS SHOWN.

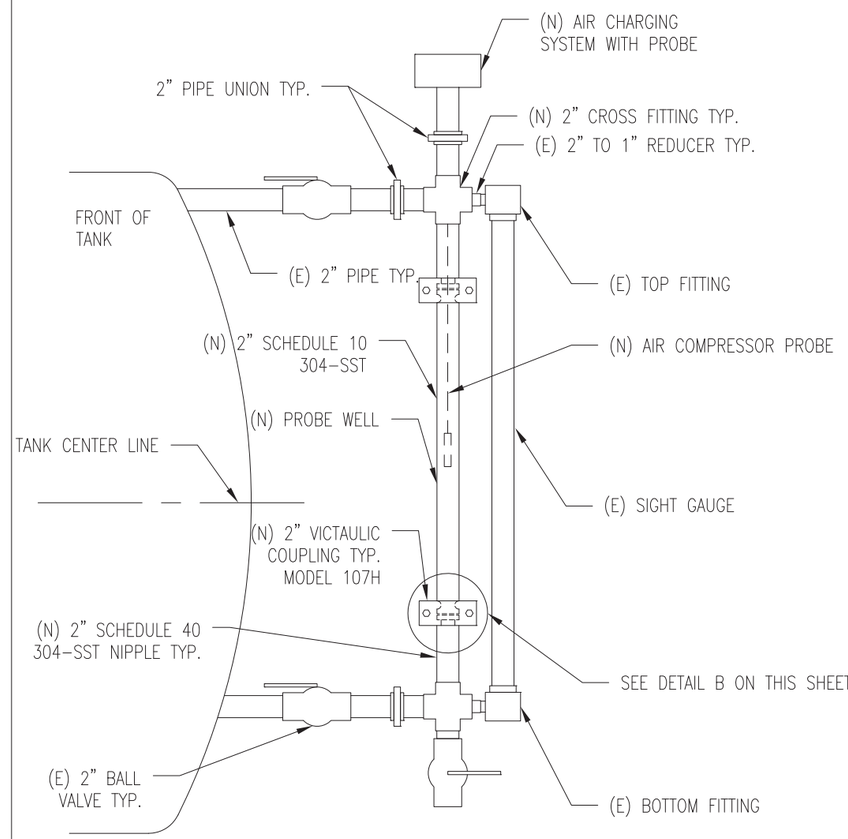

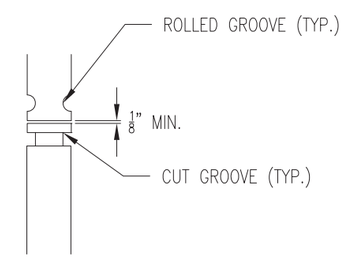

DETAIL B

HYDROPNEUMATIC SYSTEM
DETAIL

PN: Z14110105 WELL REHABILITATION PROJECT PHASE 3 R:\Civ3D Projects\Z14110105_Well-Rehab_Ph3\Dwgs

PN: Z14110104 WELL REHABILITATION PROJECT PHASE 3

REVISIONS			
NO.	DESCRIPTION	DATE	BY

BENCH MARK ELEV. _____
DESCRIPTION:

FIELD BOOK
SCALE: H: N.A. V: N.A.

1"
ON ORIGINAL SCALE DRAWING ADJUST SCALED DIMENSIONS IF THIS DOES NOT SCALE AT 1"

CITY OF SACRAMENTO
DEPARTMENT OF UTILITIES

DRAWN BY: E. SALCEDO DATE: SEP 2014
DESIGNED BY: P. BARNES R.C.E. NO. E14584 DATE: SEP 2014
CHECKED BY: D. HANSEN R.C.E. NO. E12512 DATE: SEP 2014

REGISTERED PROFESSIONAL ENGINEER PAUL R. BARNES No.E15329 Exp.6/30/15 ELECTRICAL STATE OF CALIFORNIA

IMPROVEMENT PLANS FOR:
WELL REHABILITATION PROJECT PHASE 3

ELECTRICAL STANDARD DETAILS

GIS GRID NO. GOT GRID
PN: Z14110105

DWG. NO. E-25
SHEET 26 OF 54

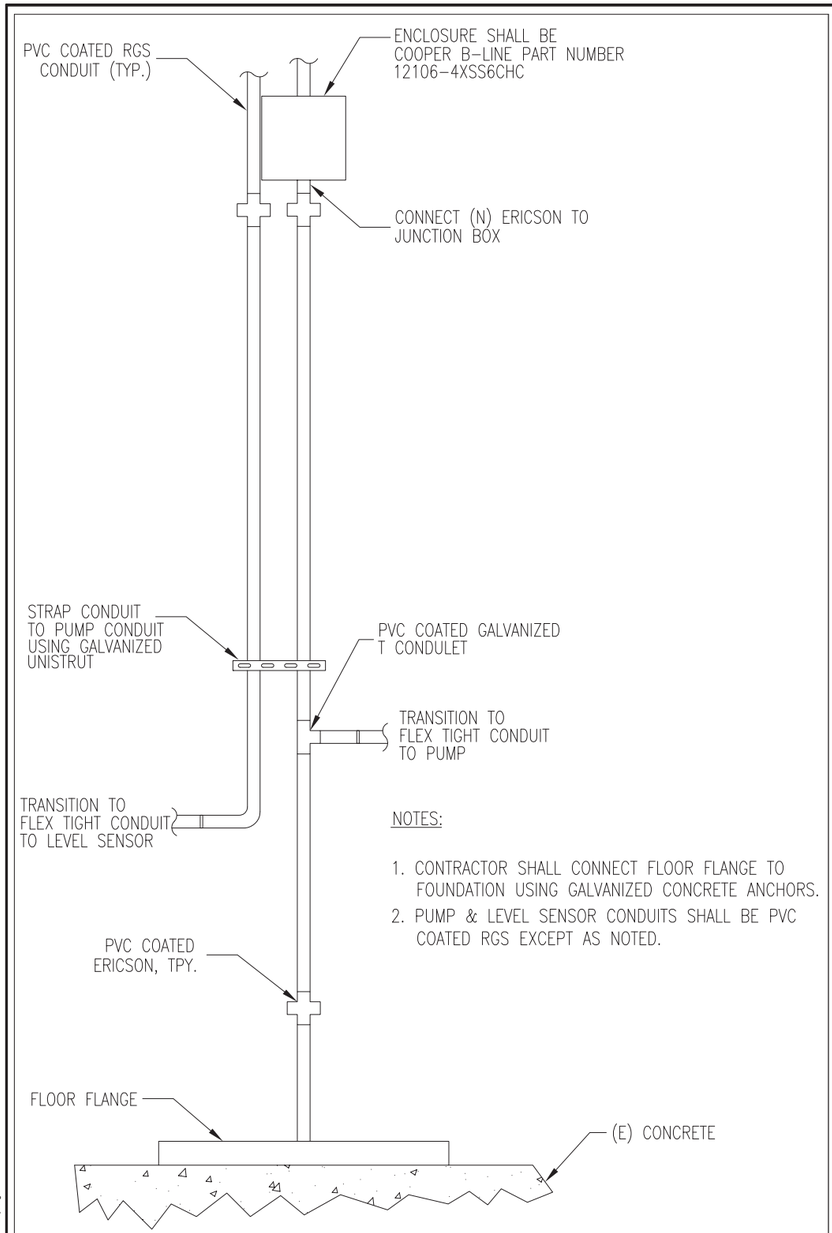

NOTES:

1. CONTRACTOR SHALL CONNECT FLOOR FLANGE TO FOUNDATION USING GALVANIZED CONCRETE ANCHORS.
2. PUMP & LEVEL SENSOR CONDUITS SHALL BE PVC COATED RGS EXCEPT AS NOTED.

WELL 138 WELL HEAD
CONDUIT DETAIL

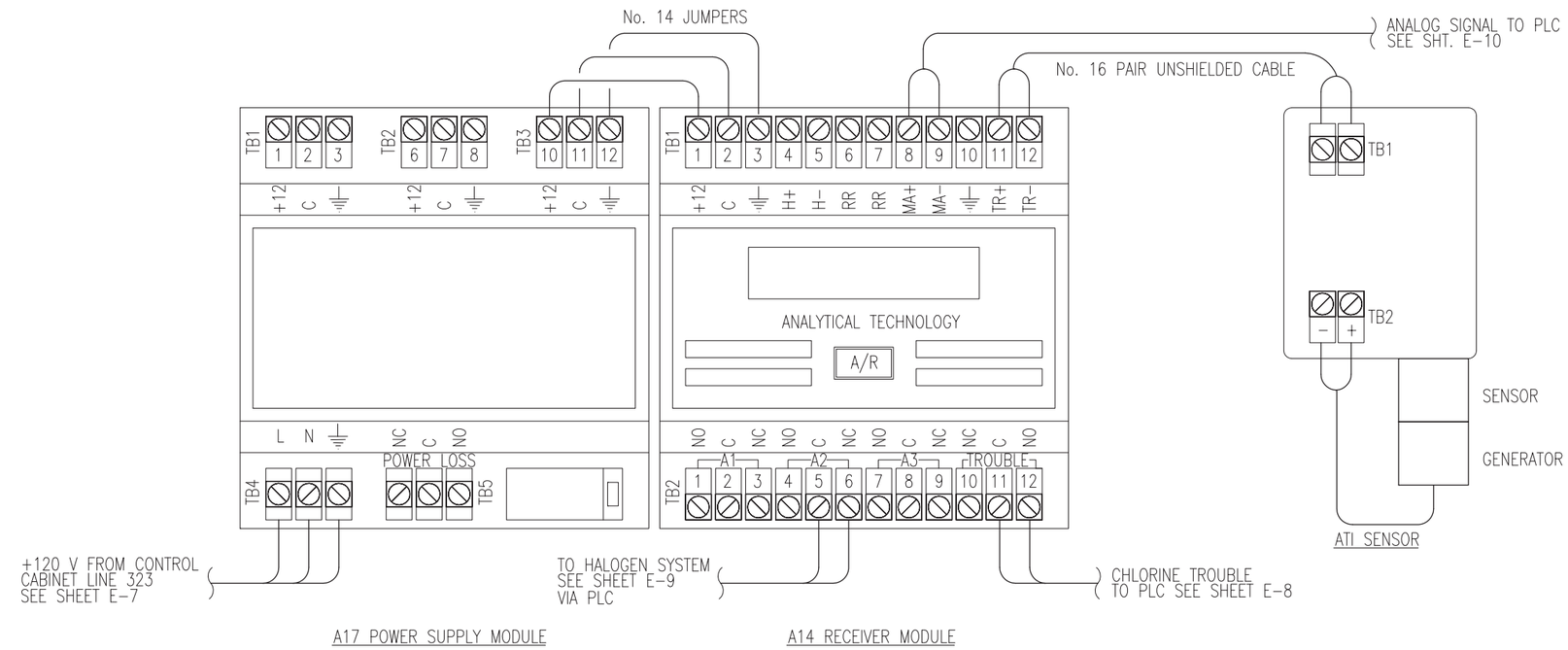

NOTES:

1. CONTRACTOR SHALL CONNECT THE POWER SUPPLY MODULE TO THE RECEIVER MODULE AS SHOWN.
2. CONTRACTOR SHALL INSTALL A No. 16 PAIR UNSHIELDED CABLE BETWEEN THE RECEIVER MODULE AND THE SENSOR.
3. RELAY A2 IS CONFIGURED TO TRIP AT THE ALARM SET-POINT USING NORMALLY CLOSED CONTACTS.
4. RELAY A2 IS SET TO FAILSAFE MODE WHICH MEANS THE COIL WILL BE NORMALLY ENERGIZED. WHILE CONFIGURED IN THIS MANNER SHOULD THE CHLORINE CIRCUIT LOSE POWER, RELAY A2'S NORMALLY CLOSED CONTACTS WILL CLOSE SENDING A CLOSE SIGNAL TO THE HALOGEN VALVE.
5. CONTRACTOR SHALL SET THE DIP SWITCHES ON THE CHLORINE DETECTOR SUCH THAT "X" INDICATES THE POSITION OF THE DIP SWITCH

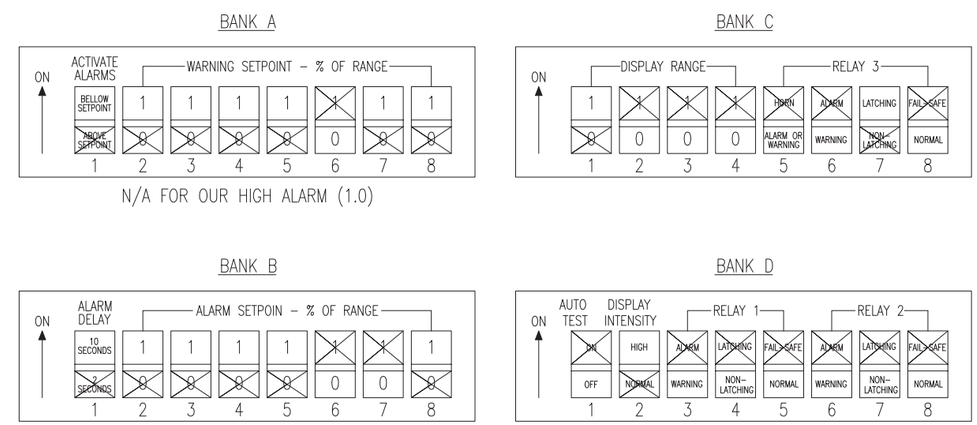

A14 RECEIVER MODULE DIP SWITCH SETTING

WELL REHABILITATION PROJECT PHASE 3
R:\Civil3D Projects\Z14110105_Well-Rehab_Ph3\Dwgs

PN: Z14110104 WELL REHABILITATION PROJECT PHASE 3

PN: Z14110105

REVISIONS			
NO.	DESCRIPTION	DATE	BY

BENCH MARK ELEV. _____
DESCRIPTION:

FIELD BOOK
SCALE: H: N.A. V: N.A.

1"
ON ORIGINAL SCALE DRAWING ADJUST SCALED DIMENSIONS IF THIS DOES NOT SCALE AT 1"

CITY OF SACRAMENTO
DEPARTMENT OF UTILITIES

DRAWN BY: E. SALCEDO DATE: SEP 2014
DESIGNED BY: P. BARNES R.C.E. NO. E14584 DATE: SEP 2014
CHECKED BY: D. HANSEN R.C.E. NO. E12512 DATE: SEP 2014

REGISTERED PROFESSIONAL ENGINEER PAUL R. BARNES No.E15329 Exp.6/30/15 ELECTRICAL STATE OF CALIFORNIA

IMPROVEMENT PLANS FOR:
WELL REHABILITATION PROJECT PHASE 3

ELECTRICAL STANDARD DETAIL

GIS GRID NO. GOT GIS

PN: Z14110105

DWG. NO. E-26
SHEET 27 OF 54

NOTES:

1. GAUGE SHALL BE MCMASTER-CARR, MODEL No. 3846K6 OR APPROVED EQUAL.
2. PRESSURE GAUGE SHALL BE INSTALLED ON DOWNSTREAM SIDE OF FLOW METER.

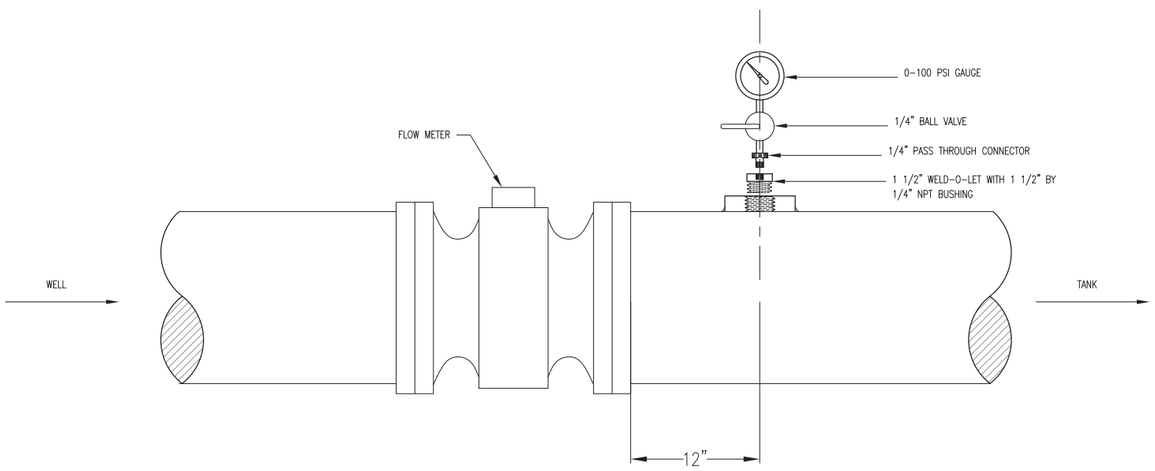

PRESSURE GAUGE
N.T.S.

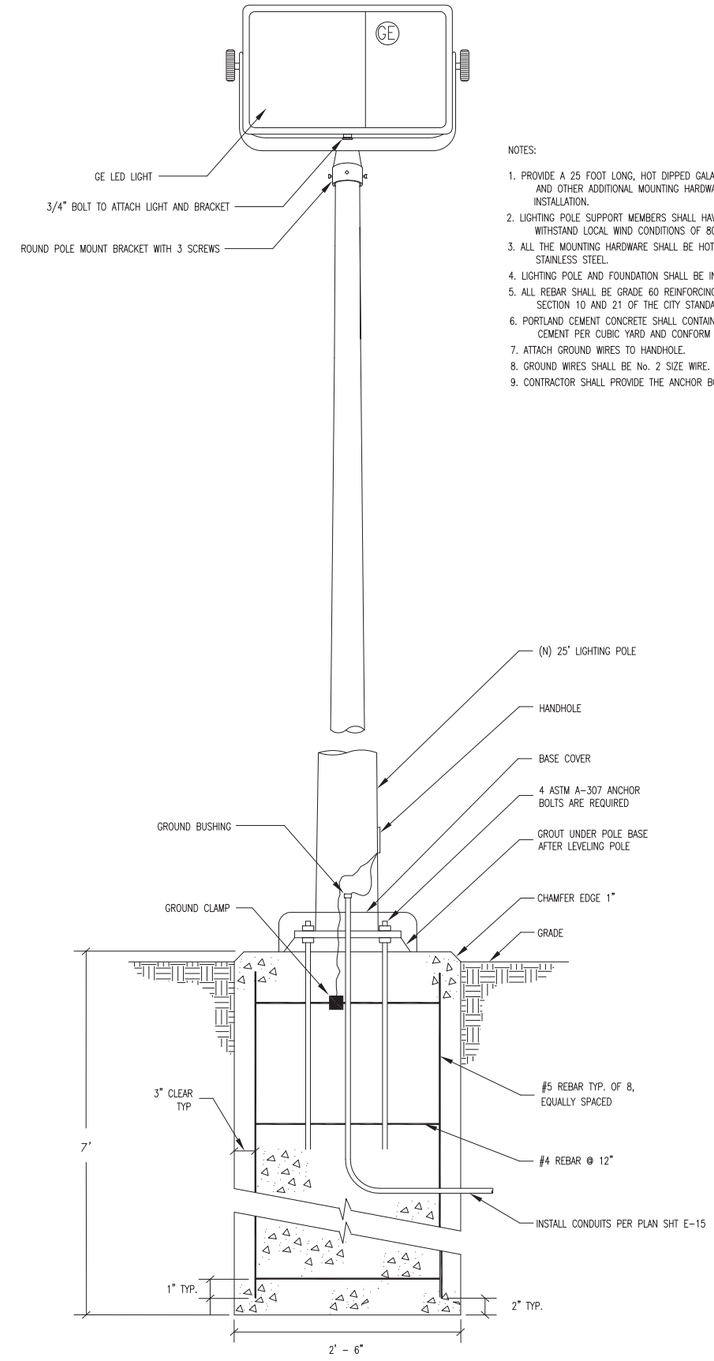

NOTES:

1. PROVIDE A 25 FOOT LONG, HOT DIPPED GALAVINIZED STEEL LIGHTING POLE AND OTHER ADDITIONAL MOUNTING HARDWARE REQUIRED FOR A COMPLETE INSTALLATION.
2. LIGHTING POLE SUPPORT MEMBERS SHALL HAVE SUFFICIENT STRENGTH TO WITHSTAND LOCAL WIND CONDITIONS OF 80 MPH SUSTAINED.
3. ALL THE MOUNTING HARDWARE SHALL BE HOT DIPPED GALVANIZED OR STAINLESS STEEL.
4. LIGHTING POLE AND FOUNDATION SHALL BE INSTALLED PER CONTRACT DRAWINGS.
5. ALL REBAR SHALL BE GRADE 60 REINFORCING STEEL AND SHALL CONFORM TO SECTION 10 AND 21 OF THE CITY STANDARD SPECIFICATIONS.
6. PORTLAND CEMENT CONCRETE SHALL CONTAIN NOT LESS THAN 470 POUNDS OF CEMENT PER CUBIC YARD AND CONFORM TO CITY STANDARD SPECIFICATIONS.
7. ATTACH GROUND WIRES TO HANDHOLE.
8. GROUND WIRES SHALL BE No. 2 SIZE WIRE.
9. CONTRACTOR SHALL PROVIDE THE ANCHOR BOLTS.

ANTENNA POLE DETAIL
N.T.S.

WELL REHABILITATION PROJECT PHASE 3
R:\Civil3D Projects\Z14110105_Well-Rehab_Ph3\Dwgs

PN: Z14110104 WELL REHABILITATION PROJECT PHASE 3

PN: Z14110105

REVISIONS			
NO.	DESCRIPTION	DATE	BY

BENCH MARK ELEV. _____
DESCRIPTION:

FIELD BOOK
SCALE:
H: N.A.
V: N.A.

1"
ON ORIGINAL SCALE DRAWING ADJUST SCALED DIMENSIONS IF THIS DOES NOT SCALE AT 1"

CITY OF SACRAMENTO
DEPARTMENT OF UTILITIES

DRAWN BY: E. SALCEDO
DATE: SEP 2014
DESIGNED BY: P. BARNES
R.C.E. NO. E14584 DATE: SEP 2014
CHECKED BY: D. HANSEN
R.C.E. NO. E12512 DATE: SEP 2014

REGISTERED PROFESSIONAL ENGINEER
PAUL R. BARNES
No.E15329
Exp.6/30/15
ELECTRICAL
STATE OF CALIFORNIA

IMPROVEMENT PLANS FOR:
WELL REHABILITATION PROJECT PHASE 3

ELECTRICAL STANDARD DETAIL

GIS GRID NO.
GOT GRID NO.
PN: Z14110105

DWG. NO. E-27
SHEET 28 OF 54

DEMOLITION NOTES (WELL 94):

1. CITY WILL REMOVE HAZARDOUS MATERIALS FROM WELL SITE, INCLUDING FLUORIDE AND CHLORINE FROM WITHIN CHEMICAL SHED.
2. CONTRACTOR SHALL LOWER (E) WATER LINES WITHIN RP DEVICE CAGE AND RELOCATE WATER LINE FROM OUTLET FROM TANK TO A (N) CHRISTY BOX INSTALLED FLUSH TO GRADE, AND RECONNECT THE SERVICE TO THE (E) CHEMICAL SHED AND (E) EYE WASH STATION. CONTRACTOR SHALL INSTALL A (N) SHUTOFF VALVE WITHIN THE CHRISTY BOX FOR ISOLATION OF SERVICE INTO THE CHEMICAL SHED.
3. EXISTING ELECTRICAL SERVICE FROM SMUD SHALL BE PROTECTED ON TEMPORARY SUPPORTS UNTIL NEW SERVICE IS INSTALLED.
4. CONTRACTOR SHALL REMOVE THE (E) CHLORINE LEAK DETECTOR AND RETURN TO CITY.
5. CONTRACTOR SHALL REMOVE AND SALVAGE THE (E) PLC CABINET FROM WITHIN (E) CHEMICAL SHED.
6. CONTRACTOR SHALL SAWCUT (E) CONDUIT AND PIPE STUBS FLUSH WITH GRADE.

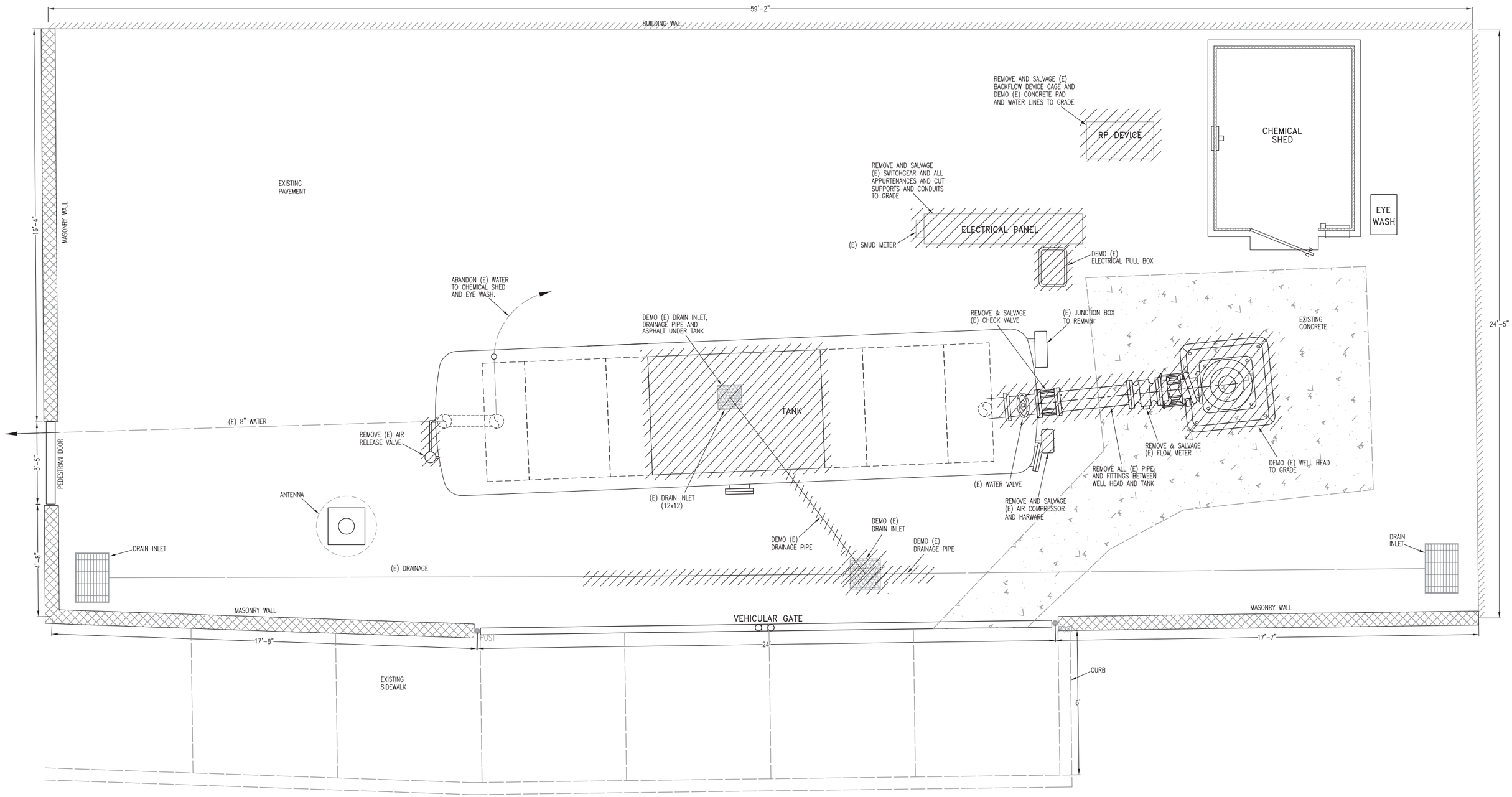

PN: Z14110105

WELL REHABILITATION PROJECT PHASE 3
R:\Civil3D Projects\Z14110105_Well-Rehab_Ph3\Dwgs

PN: Z14110104 WELL REHABILITATION PROJECT PHASE 3

REVISIONS			
NO.	DESCRIPTION	DATE	BY

BENCH MARK ELEV. _____
DESCRIPTION:

FIELD BOOK
SCALE:
H: N.A.
V: N.A.

1"
ON ORIGINAL SCALE DRAWING ADJUST SCALED DIMENSIONS IF THIS DOES NOT SCALE AT 1"

CITY OF SACRAMENTO
DEPARTMENT OF UTILITIES

DRAWN BY: A. VELAZQUEZ
DATE: SEP 2014
DESIGNED BY: M. THOMAS
R.C.E. NO. C66780 DATE: SEP 2014
CHECKED BY: D. SHERRY
R.C.E. NO. C63770 DATE: SEP 2014

REGISTERED PROFESSIONAL ENGINEER
REAN ELIZABETH HONEA
No. C66780
Exp. 09/30/14
CIVIL
STATE OF CALIFORNIA

IMPROVEMENT PLANS FOR:
WELL REHABILITATION PROJECT PHASE 3
WELL# 94 DEMOLITION PLAN
NEAR 620 RIO TIERRA AVE (APN 250-0520-006)

GIS GRID NO.
GOT GRID NO.
PN: Z14110105

DWG. NO. C-1
SHEET 29 OF 54

CONSTRUCTION NOTES (WELL 94):

1. CONTRACTOR SHALL MATCH TOP ELEVATION TO (N) SAND PIT TO HIGHEST ELEVATION OF SURROUNDING GRADE. ASPHALT SHALL BE CUT AND REMOVED 2-FEET AROUND (N) SAND PIT BOUNDARIES AND (N) ASPHALT SHALL BE INSTALLED TO PROVIDE A SMOOTH TRANSITION BETWEEN TOP EDGE OF SAND PIT AND SURROUNDING ASPHALT & CONCRETE.
2. CONTRACTOR SHALL FILL IN ALL CRACKS LARGER THAN 1/8" FOUND WITHIN CONCRETE DRAINAGE STRUCTURE AND SUPPORTS UNDERNEATH HYDROPNEUMATIC TANK.
3. EXPOSED GROUND FROM DEMOLITION WORK SHALL BE REPAIRED WITH 3" THICK ASPHALT SECTION (NO LARGER THAN ½" AGGREGATE). EDGES SHALL BE SAWCUT AND SPRAYED WITH TACK COAT PRIOR TO ASPHALT INSTALLATION.
4. CONTRACTOR SHALL RELOCATE (E) PULL BOX, AS NECESSARY, TO ELIMINATE CONFLICTS WITH THE (N) WATER MAIN CONNECTION BETWEEN THE WELL AND THE TANK.
5. CONTRACTOR SHALL INSTALL (N) CHLORINE LEAK DETECTOR IN SAME LOCATION AS (E) CHLORINE LEAK DETECTOR.
6. CONTRACTOR SHALL CLEAN AND REPAINT (E) COATING DAMAGED WATER PIPE ADJACENT TO FLUORIDE INJECTION SITE.
7. CONTRACTOR SHALL PROVIDE ALL PIPE AND FITTINGS NECESSARY TO CONNECT THE (N) WELL HEAD DISCHARGE PIPE TO THE (E) PIPE AND (N) FLOW METER.
8. CONTRACTOR SHALL SAW CUT AND REMOVE (E) ASPHALT TO FACILITATE THE INSTALLATION OF THE (N) SWITCHGEAR COVER.
9. FOR THE WELL HEAD, CONTRACTOR SHALL PROVIDE CLASS B CONCRETE WITH 4000-PSI MINIMUM 28-DAY COMPRESSIVE STRENGTH (6 SACK CEMENT CONTENT, 4" MAXIMUM SLUMP) PER CSSS SECTIONS 10 AND 20.
10. CONTRACTOR SHALL USE INTERMEDIATE GRADE ASTM A615 (GRADE 60) REINFORCING, EXCEPT WHEN SUBMERGED UNDERWATER WHERE ASTM A706 (GRADE 60) SHALL BE USED.
11. THE FOLLOWING REINFORCEMENT CLEARANCES SHALL BE OBSERVED: 3" FOR SURFACES POURED AGAINST THE EARTH OR ARE TO BE SUBMERGED UNDER WATER, 2" FOR FORMED SURFACES EXPOSED TO EARTH OR WEATHER, AND 1.5" FOR ALL OTHER SURFACES.
12. A ¾" CHAMFER OR TOOLED EDGE SHALL BE PROVIDED AT EXPOSED EDGES OF CONCRETE, UNLESS OTHERWISE SHOWN.
13. REINFORCING, ANCHOR BOLTS, ETC. SHALL BE SECURED RIGIDLY IN PLACE PRIOR TO POURING CONCRETE.
14. HORIZONTAL REINFORCING SHALL BE SUPPORTED ON MORTAR BLOCK (OR OTHER APPROVED METHOD OF SUPPORT) AT FOOTINGS.
15. HOOKS SHALL BE ACI STANDARD HOOKS, UNLESS NOTED OTHERWISE.
16. CONTRACTOR SHALL CONFORM TO AISC SPECS AND CODE OF STANDARD PRACTICES. AWS SPECIFICATIONS SHALL BE USED FOR WELDING.
17. CONTRACTOR SHALL INSTALL (N) WELD-O-LET FOR (N) PRESSURE GAUGE ON DOWNSTREAM SIDE OF FLOW METER. (SEE SHEET E-27 FOR DETAILS)

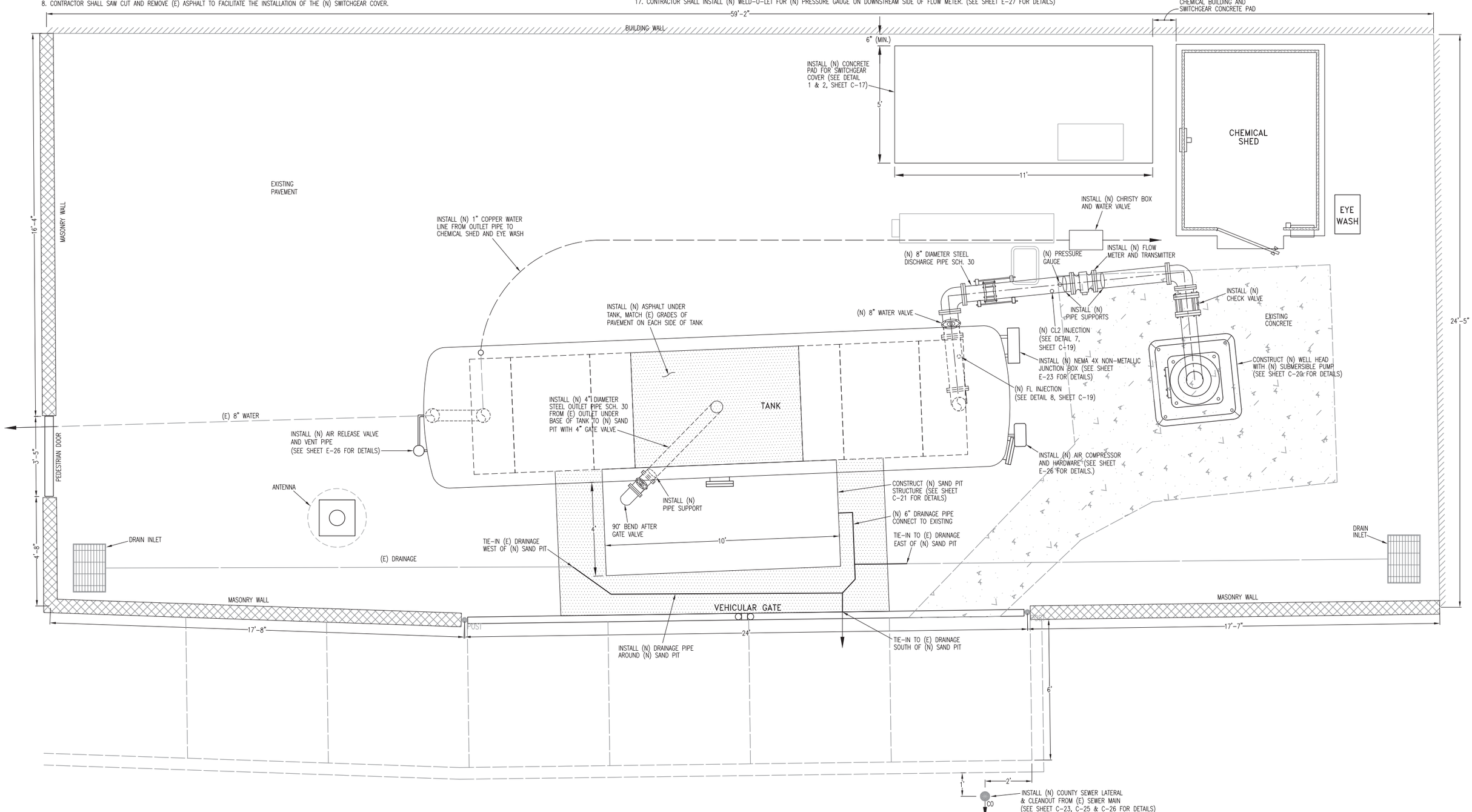

WELL REHABILITATION PROJECT PHASE 3
R:\Civil3D Projects\Z14110105_Well-Rehab_Ph3\Dwgs

PN: Z14110105

REVISIONS			
NO.	DESCRIPTION	DATE	BY

BENCH MARK ELEV. _____
DESCRIPTION:

FIELD BOOK

SCALE:
H: N.A.
V: N.A.

1"
ON ORIGINAL SCALE DRAWING ADJUST SCALED DIMENSIONS IF THIS DOES NOT SCALE AT 1"

CITY OF SACRAMENTO
DEPARTMENT OF UTILITIES

DRAWN BY: A. VELAZQUEZ
DATE: SEP 2014
DESIGNED BY: M. THOMAS
R.C.E. NO. C66780 DATE: SEP 2014
CHECKED BY: D. SHERRY
R.C.E. NO. C63770 DATE: SEP 2014

REGISTERED PROFESSIONAL ENGINEER
MEGAN ELIZABETH THOMAS
No. C66780
Exp. 09/30/14
CIVIL
STATE OF CALIFORNIA

IMPROVEMENT PLANS FOR:
WELL REHABILITATION PROJECT PHASE 3
WELL# 94 CIVIL SITE PLAN
NEAR 620 RIO TIERRA AVE (APN 250-0520-006)

GIS GRID NO.
GOT GRID NO.

PN: Z14110105

DWG. NO. C-2
SHEET 30 OF 54

PN: Z14110104 WELL REHABILITATION PROJECT PHASE 3

DEMOLITION NOTES (WELL 107):

1. CONTRACTOR SHALL REMOVE (E) CHEMICAL SHED AND RELOCATE TO WELL 122. CONTRACTOR SHALL PROTECT SHED FROM DAMAGE DURING REMOVAL AND RELOCATION PROCESS.
2. CONTRACTOR SHALL REMOVE AND DISPOSE OF (E) FENCE FABRIC, BARBED WIRE, AND FENCE SLATS WITHIN FENCE FABRIC.
3. CITY WILL REMOVE HAZARDOUS MATERIALS FROM WELL SITE, INCLUDING FLUORIDE AND CHLORINE FROM WITHIN CHEMICAL SHED.
4. EXISTING ELECTRICAL SERVICE FROM SMUD SHALL BE PROTECTED ON TEMPORARY SUPPORTS UNTIL NEW SERVICE IS INSTALLED.
5. CONTRACTOR SHALL REMOVE THE (E) CHLORINE LEAK DETECTOR AND RETURN TO CITY.
6. CONTRACTOR SHALL REMOVE AND SALVAGE THE (E) PLC CABINET FROM WITHIN CHEMICAL SHED.
7. CONTRACTOR SHALL SAWCUT (E) CONDUIT AND PIPE STUBS FLUSH WITH GRADE.

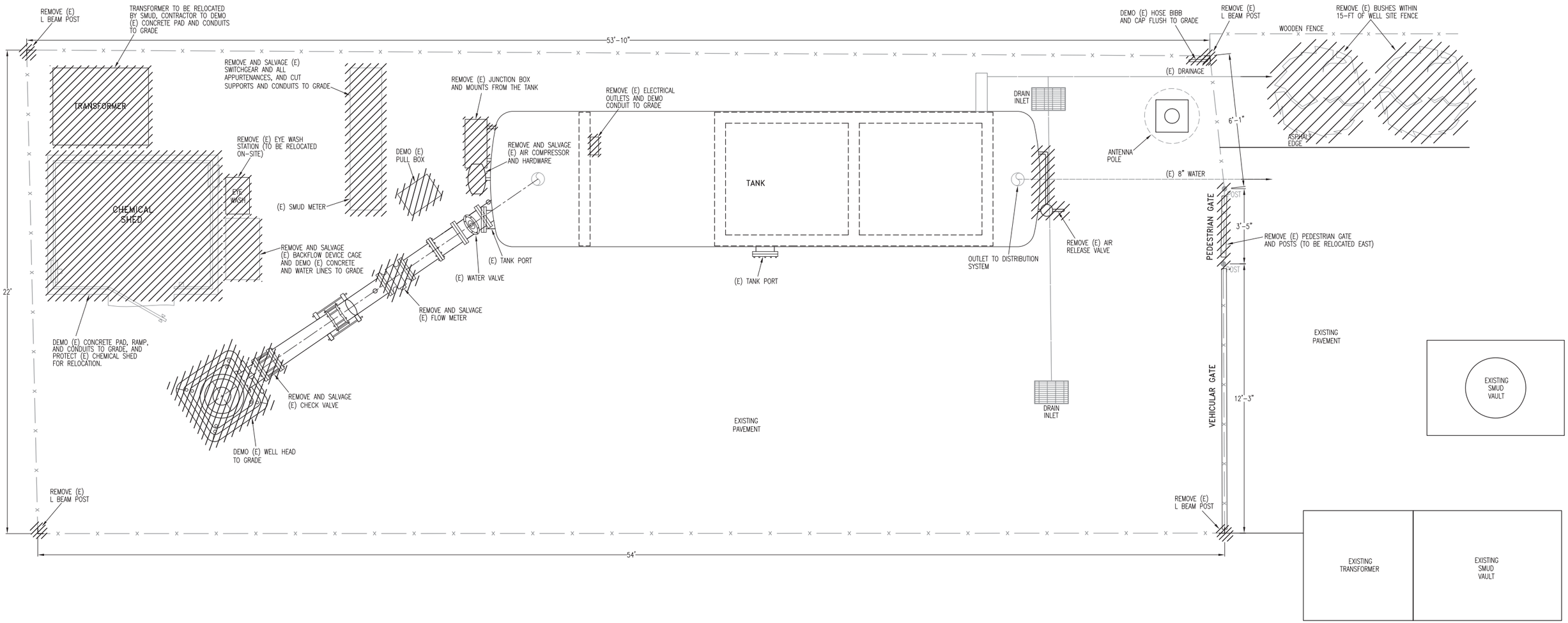

WELL REHABILITATION PROJECT PHASE 3
R:\Civil3D Projects\Z14110105_Well-Rehab_Ph3\Dwgs

PN: Z14110104 WELL REHABILITATION PROJECT PHASE 3

PN: Z14110105

REVISIONS			
NO.	DESCRIPTION	DATE	BY

BENCH MARK ELEV. _____
DESCRIPTION:

FIELD BOOK

SCALE:
H: N.A.
V: N.A.

1"
ON ORIGINAL SCALE DRAWING ADJUST SCALED DIMENSIONS IF THIS DOES NOT SCALE AT 1"

CITY OF SACRAMENTO
DEPARTMENT OF UTILITIES

DRAWN BY: A. VELAZQUEZ
DATE: SEP 2014

DESIGNED BY: M. THOMAS
R.C.E. NO. C66780 DATE: SEP 2014

CHECKED BY: D. SHERRY
R.C.E. NO. C63770 DATE: SEP 2014

REGISTERED PROFESSIONAL ENGINEER
MEGAN ELIZABETH TEPPER
No. C66780
Exp. 09/30/14
CIVIL
STATE OF CALIFORNIA

IMPROVEMENT PLANS FOR:
WELL REHABILITATION PROJECT PHASE 3
WELL# 107 DEMOLITION PLAN
7907 GRANDSTAFF DR (APN 117-0021-023)

GIS GRID NO.
GOT GRID NO.
PN: Z14110105

DWG. NO. C-3
SHEET 31 OF 54

CONSTRUCTION NOTES (WELL 107):

1. CONTRACTOR SHALL RELOCATE (E) CHEMICAL SHED FROM WELL 122 TO SITE. CONTRACTOR SHALL CONSTRUCT (N) CONCRETE PAD AND RAMP TO SHED WITH (N) CONDUIT AND PIPING INSTALLED THROUGH PAD FOUNDATION.
2. CONTRACTOR SHALL LOWER (E) WATER LINES WITHIN RP DEVICE CAGE INTO A (N) CHRISTY BOX INSTALLED FLUSH TO GRADE. CONTRACTOR SHALL INSTALL A (N) SHUTOFF VALVE ON THE LOWERED WATER LINES FOR ISOLATION OF SERVICE INTO THE CHEMICAL SHED.
3. CONTRACTOR SHALL PLACE (N) ROUND GALVANIZED POSTS OF (E) I-BEAM FENCE POSTS AND SECURE (N) POSTS BY PLUG WELDING OR INSTALLING GALVANIZED SCREWS. CONTRACTOR SHALL EXTEND (E) GALVANIZED FENCE POSTS TO 8-FEET IN HEIGHT, INSTALL (N) ROUND GALVANIZED TOP RAILS, INSTALL (N) 8-FOOT HIGH PEDESTRIAN AND VEHICULAR GATES, INSTALL (N) 3-BAND BARBED WIRE AND EXTENSIONS, AND INSTALL (N) 9-GAUGE 2X2 KNUCKLE BARBED CHAIN LINK FENCE. POST EXTENSIONS SHALL BE WELDED TO (E) POSTS AND COLD GALVANIZED. GREEN FENCE SLATS SHALL BE INSERTED INTO (N) FENCE FABRIC ALONG THE WEST SIDE OF THE SITE.
4. CONTRACTOR SHALL RELOCATE (E) PULL BOX, AS NECESSARY, TO ELIMINATE CONFLICTS WITH (N) SWITCHGEAR COVER AND PAD.
5. CONTRACTOR SHALL FILL IN ALL CRACKS LARGER THAN 1/8" FOUND WITHIN CONCRETE DRAINAGE STRUCTURE AND SUPPORTS UNDERNEATH HYDROPNEUMATIC TANK.
6. EXPOSED GROUND FROM DEMOLITION WORK SHALL BE REPAIRED WITH 3" THICK ASPHALT SECTION (NO LARGER THAN ½" AGGREGATE). EDGES SHALL BE SAWCUT AND SPRAYED WITH TACK COAT PRIOR TO ASPHALT INSTALLATION.
7. CONTRACTOR SHALL INSTALL (N) CHLORINE LEAK DETECTOR IN SAME LOCATION AS (E) CHLORINE LEAK DETECTOR FROM WELL 122 CHEMICAL SHED.
8. CONTRACTOR SHALL PROVIDE ALL PIPE AND FITTINGS NECESSARY TO CONNECT THE (N) WELL HEAD DISCHARGE PIPE TO THE (E) PIPE AND (N) FLOW METER.
9. CONTRACTOR SHALL SAW CUT AND REMOVE (E) ASPHALT TO FACILITATE THE INSTALLATION OF THE (N) SWITCHGEAR COVER.
10. FOR THE WELL HEAD, CONTRACTOR SHALL PROVIDE CLASS B CONCRETE WITH 4000-PSI MINIMUM 28-DAY COMPRESSIVE STRENGTH (6 SACK CEMENT CONTENT, 4" MAXIMUM SLUMP) PER CSSS SECTIONS 10 AND 20.
11. CONTRACTOR SHALL USE INTERMEDIATE GRADE ASTM A615 (GRADE 60) REINFORCING, EXCEPT WHEN SUBMERGED UNDERWATER WHERE ASTM A706 (GRADE 60) SHALL BE USED.
12. THE FOLLOWING REINFORCEMENT CLEARANCES SHALL BE OBSERVED: 3" FOR SURFACES POURED AGAINST THE EARTH OR ARE TO BE SUBMERGED UNDER WATER, 2" FOR FORMED SURFACES EXPOSED TO EARTH OR WEATHER, AND 1.5" FOR ALL OTHER SURFACES.
13. A ¾" CHAMFER OR TOOLED EDGE SHALL BE PROVIDED AT EXPOSED EDGES OF CONCRETE, UNLESS OTHERWISE SHOWN.
14. REINFORCING, ANCHOR BOLTS, ETC. SHALL BE SECURED RIGIDLY IN PLACE PRIOR TO POURING CONCRETE.
15. HORIZONTAL REINFORCING SHALL BE SUPPORTED ON MORTAR BLOCK (OR OTHER APPROVED METHOD OF SUPPORT) AT FOOTINGS.
16. HOOKS SHALL BE ACI STANDARD HOOKS, UNLESS NOTED OTHERWISE.
17. CONTRACTOR SHALL CONFORM TO AISC SPECS AND CODE OF STANDARD PRACTICES. AWS SPECIFICATIONS SHALL BE USED FOR WELDING.
18. VEHICULAR GATE SHALL HAVE 6' GATE ON EAST AND 8' GATE ON WEST SUCH THAT NEW GATE DOES NOT IMPACT TANK OR TANK APPURTENANCES WHEN USED.
19. CONTRACTOR SHALL INSTALL (N) WELD-O-LET FOR (N) PRESSURE GAUGE ON DOWNSTREAM SIDE OF FLOW METER. (SEE SHEET E-27 FOR DETAILS)

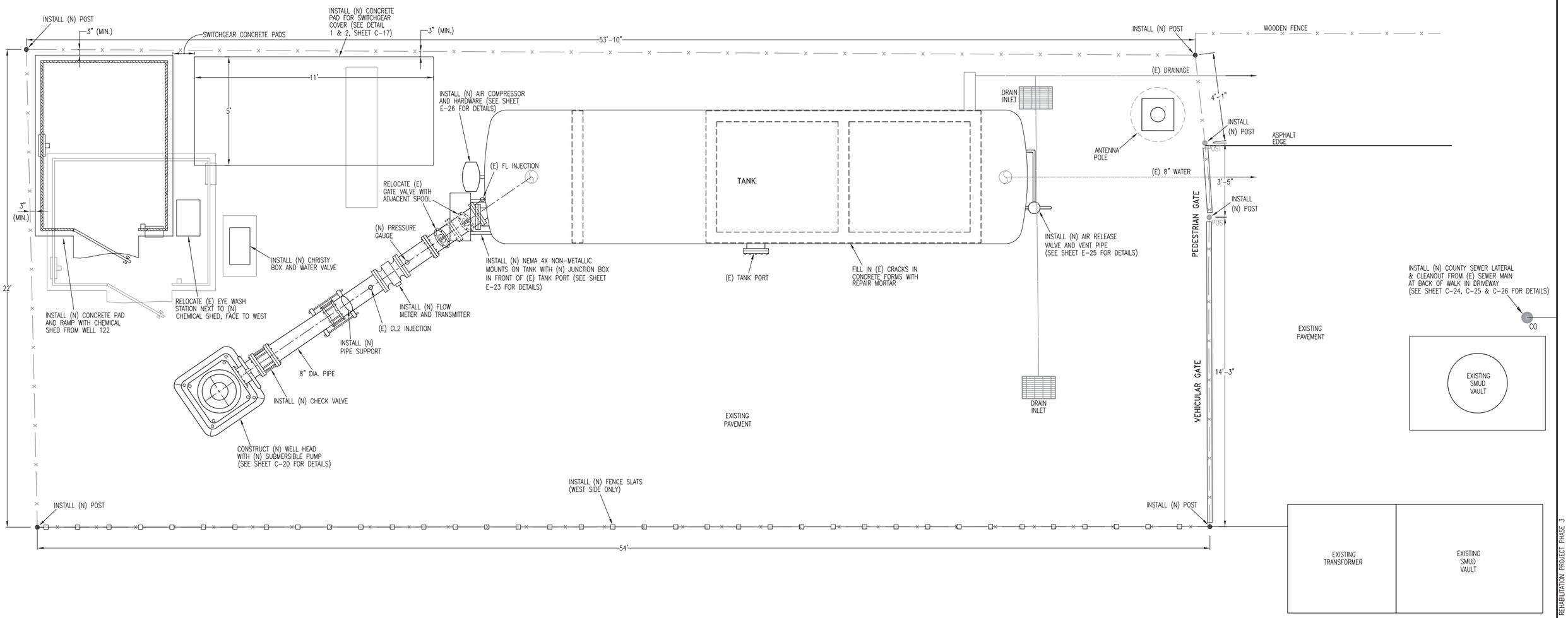

WELL REHABILITATION PROJECT PHASE 3
R:\Civil3D Projects\Z14110105_Well-Rehab_Ph3\Dwgs

PN: Z14110104 WELL REHABILITATION PROJECT PHASE 3

PN: Z14110105

REVISIONS			
NO.	DESCRIPTION	DATE	BY

BENCH MARK ELEV. _____
DESCRIPTION:

FIELD BOOK

SCALE:
H: N.A.
V: N.A.

1"
ON ORIGINAL SCALE DRAWING ADJUST SCALED DIMENSIONS IF THIS DOES NOT SCALE AT 1"

CITY OF SACRAMENTO
DEPARTMENT OF UTILITIES

DRAWN BY: A. VELAZQUEZ
DATE: SEP 2014
DESIGNED BY: M. THOMAS
R.C.E. NO. C66780 DATE: SEP 2014
CHECKED BY: D. SHERRY
R.C.E. NO. C63770 DATE: SEP 2014

REGISTERED PROFESSIONAL ENGINEER
MEGAN ELIZABETH HONEY
No. C66780
Exp. 09/30/14
CIVIL
STATE OF CALIFORNIA

IMPROVEMENT PLANS FOR:
WELL REHABILITATION PROJECT PHASE 3
WELL# 107 CIVIL SITE PLAN
7907 GRANDSTAFF DR (APN 117-0021-023)

GIS GRID NO.
GOT GRID NO.
PN: Z14110105

DWG. NO. C-4
SHEET 32 OF 54

DEMOLITION NOTES (WELL 120):

1. CONTRACTOR SHALL REMOVE AND DISPOSE OF (E) FENCE FABRIC, BARBED WIRE, AND FENCE SLATS WITHIN FENCE FABRIC.
2. CITY WILL REMOVE HAZARDOUS MATERIALS FROM WELL SITE, INCLUDING FLUORIDE AND CHLORINE FROM WITHIN CHEMICAL SHED.
3. CONTRACTOR SHALL REMOVE AND DISPOSE OF (E) ELECTRICAL BUILDING AND ITS FOUNDATION TO GRADE. EXISTING AMI READER AND ELECTRICAL SERVICE FROM SMUD SHALL BE PROTECTED ON (E) UTILITY POLE UNTIL AMI IS RELOCATED AND NEW SMUD SERVICE IS INSTALLED.
4. CONTRACTOR SHALL REMOVE THE (E) CHLORINE LEAK DETECTOR AND RETURN TO CITY.
5. CONTRACTOR SHALL REMOVE AND SALVAGE THE (E) PLC CABINET FROM WITHIN CHEMICAL SHED.
6. CONTRACTOR SHALL SAWCUT (E) CONDUIT AND PIPE STUBS FLUSH WITH GRADE.

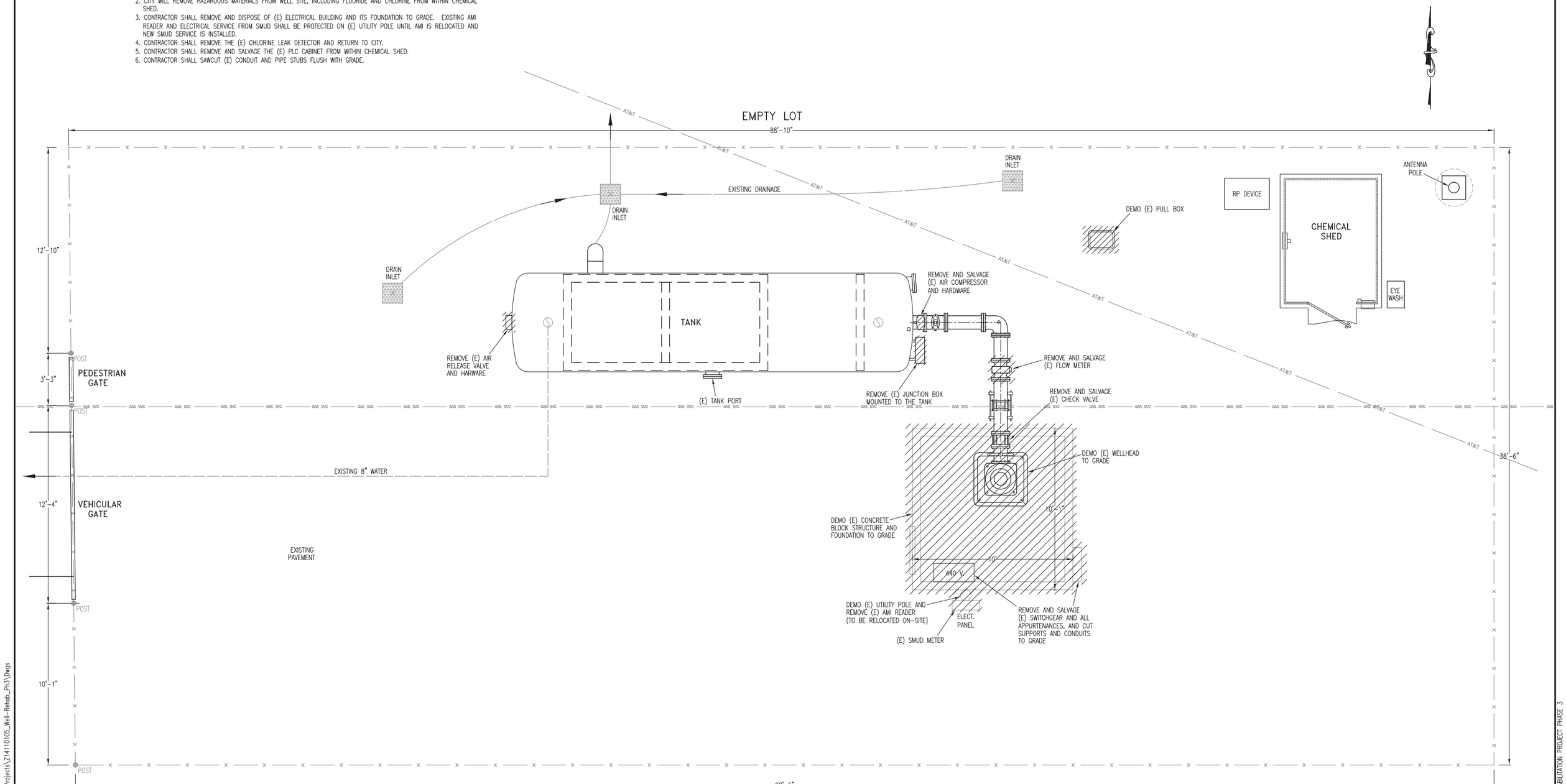

WELL REHABILITATION PROJECT PHASE 3
R:\Civil3D Projects\Z14110105_Well-Rehab_Ph3\Dwgs

PN: Z14110104 WELL REHABILITATION PROJECT PHASE 3

PN: Z14110105

REVISIONS			
NO.	DESCRIPTION	DATE	BY

BENCH MARK ELEV. _____
DESCRIPTION:

FIELD BOOK

SCALE:
H: N.A.
V: N.A.

1"
ON ORIGINAL SCALE DRAWING ADJUST SCALED DIMENSIONS IF THIS DOES NOT SCALE AT 1"

CITY OF SACRAMENTO
DEPARTMENT OF UTILITIES

DRAWN BY: A. VELAZQUEZ
DATE: SEP 2014
DESIGNED BY: M. THOMAS
R.C.E. NO. C66780 DATE: SEP 2014
CHECKED BY: D. SHERRY
R.C.E. NO. C63770 DATE: SEP 2014

REGISTERED PROFESSIONAL ENGINEER
KEON ELIZABETH TOMAS
No. C66780
Exp. 09/30/14
CIVIL
STATE OF CALIFORNIA

IMPROVEMENT PLANS FOR:
WELL REHABILITATION PROJECT PHASE 3
WELL# 120 DEMOLITION PLAN
2940 BRANCH ST (APN 265-0121-024)

GIS GRID NO.
GOT GRID NO.
PN: Z14110105

DWG. NO. C-5
SHEET 33 OF 54

CONSTRUCTION NOTES (WELL 120):

1. CONTRACTOR SHALL EXTEND (E) GALVANIZED FENCE POSTS TO 8-FEET IN HEIGHT, INSTALL (N) TOP RAIL, INSTALL (N) 8-FOOT HIGH PEDESTRIAN AND VEHICULAR GATES, INSTALL (N) 3-BAND BARBED WIRE AND EXTENSIONS, AND INSTALL (N) 9-GAUGE 2X2 KNUCKLE BARBED CHAIN LINK FENCE. POST EXTENSIONS SHALL BE WELDED TO (E) POSTS AND COLD GALVANIZED. GREEN FENCE SLATS SHALL BE INSERTED INTO (N) FENCE FABRIC ALONG THE EAST SIDE OF THE SITE.
2. CONTRACTOR SHALL FILL IN ALL CRACKS LARGER THAN 1/8" FOUND WITHIN CONCRETE DRAINAGE STRUCTURE AND SUPPORTS UNDERNEATH HYDROPNEUMATIC TANK.
3. EXPOSED GROUND FROM DEMOLITION WORK SHALL BE REPAIRED WITH 3" THICK ASPHALT SECTION (NO LARGER THAN ½" AGGREGATE). EDGES SHALL BE SAWCUT AND SPRAYED WITH TACK COAT PRIOR TO ASPHALT INSTALLATION.
4. CONTRACTOR SHALL INSTALL (N) CHLORINE LEAK DETECTOR IN SAME LOCATION AS (E) CHLORINE LEAK DETECTOR.
5. CONTRACTOR SHALL PROVIDE ALL PIPE AND FITTINGS NECESSARY TO CONNECT THE (N) WELL HEAD DISCHARGE PIPE TO THE (E) PIPE AND (N) FLOW METER.
6. FOR THE WELL HEAD, CONTRACTOR SHALL PROVIDE CLASS B CONCRETE WITH 4000-PSI MINIMUM 28-DAY COMPRESSIVE STRENGTH (6 SACK CEMENT CONTENT, 4" MAXIMUM SLUMP) PER CSSS SECTIONS 10 AND 20.
7. CONTRACTOR SHALL SAW CUT AND REMOVE (E) ASPHALT TO FACILITATE THE INSTALLATION OF THE (N) SWITCHGEAR COVER.
8. CONTRACTOR SHALL USE INTERMEDIATE GRADE ASTM A615 (GRADE 60) REINFORCING, EXCEPT WHEN SUBMERGED UNDERWATER WHERE ASTM A706 (GRADE 60) SHALL BE USED.
9. THE FOLLOWING REINFORCEMENT CLEARANCES SHALL BE OBSERVED: 3" FOR SURFACES POURED AGAINST THE EARTH OR ARE TO BE SUBMERGED UNDER WATER, 2" FOR FORMED SURFACES EXPOSED TO EARTH OR WEATHER, AND 1.5" FOR ALL OTHER SURFACES.
10. A ¾" CHAMFER OR TOOLED EDGE SHALL BE PROVIDED AT EXPOSED EDGES OF CONCRETE, UNLESS OTHERWISE SHOWN.
11. REINFORCING, ANCHOR BOLTS, ETC. SHALL BE SECURED RIGIDLY IN PLACE PRIOR TO POURING CONCRETE.
12. HORIZONTAL REINFORCING SHALL BE SUPPORTED ON MORTAR BLOCK (OR OTHER APPROVED METHOD OF SUPPORT) AT FOOTINGS.
13. HOOKS SHALL BE ACI STANDARD HOOKS, UNLESS NOTED OTHERWISE.
14. CONTRACTOR SHALL CONFORM TO AISC SPECS AND CODE OF STANDARD PRACTICES. AWS SPECIFICATIONS SHALL BE USED FOR WELDING.
15. CONTRACTOR SHALL INSTALL (N) WELD-O-LET FOR (N) PRESSURE GAUGE ON DOWNSTREAM SIDE OF FLOW METER. (SEE SHEET E-27 FOR DETAILS)

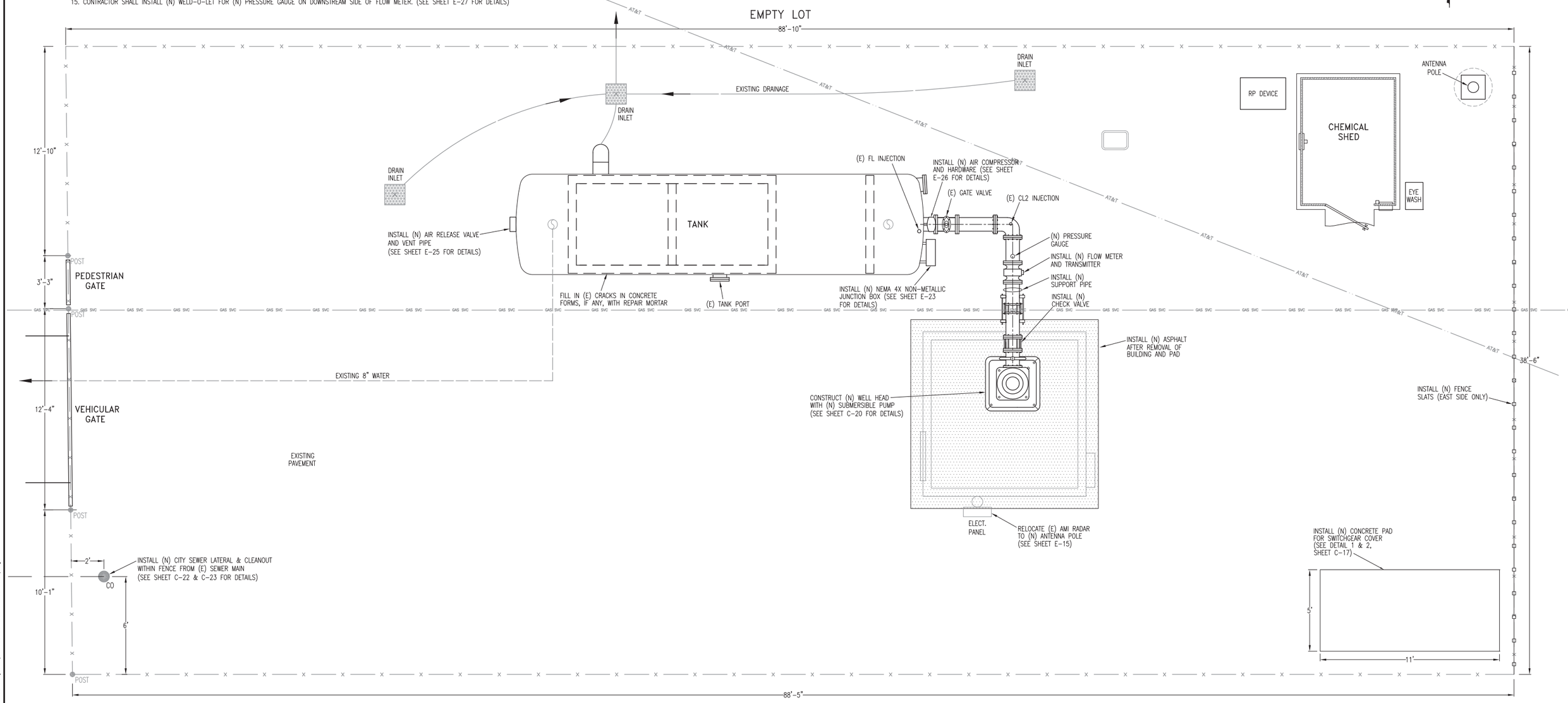

WELL REHABILITATION PROJECT PHASE 3
R:\Civil3D Projects\Z14110105_Well-Rehab_Ph3\Dwgs

PN: Z14110104 WELL REHABILITATION PROJECT PHASE 3

PN: Z14110105

REVISIONS			
NO.	DESCRIPTION	DATE	BY

BENCH MARK ELEV. _____
DESCRIPTION:

FIELD BOOK

SCALE:
H: N.A.
V: N.A.

1"
ON ORIGINAL SCALE DRAWING ADJUST SCALED DIMENSIONS IF THIS DOES NOT SCALE AT 1"

CITY OF SACRAMENTO
DEPARTMENT OF UTILITIES

DRAWN BY: A. VELAZQUEZ
DATE: SEP 2014
DESIGNED BY: M. THOMAS
R.C.E. NO. C66780 DATE: SEP 2014
CHECKED BY: D. SHERRY
R.C.E. NO. C63770 DATE: SEP 2014

REGISTERED PROFESSIONAL ENGINEER
MEGAN ELIZABETH THOMAS
No. C66780
Exp. 09/30/14
CIVIL
STATE OF CALIFORNIA

IMPROVEMENT PLANS FOR:
WELL REHABILITATION PROJECT PHASE 3
WELL# 120 CIVIL SITE PLAN
2940 BRANCH ST (APN 265-0121-024)

GIS GRID NO.
GOT GRID NO.
PN: Z14110105

DWG. NO. C-6
SHEET 34 OF 54

DEMOLITION NOTES (WELL 122):

1. CONTRACTOR SHALL REMOVE (E) CHEMICAL SHED AND RELOCATE TO WELL 107. CONTRACTOR SHALL PROTECT SHED FROM DAMAGE DURING REMOVAL AND RELOCATION PROCESS.
2. CONTRACTOR SHALL REMOVE AND DISPOSE OF (E) FENCE FABRIC, BARBED WIRE, AND FENCE SLATS WITHIN FENCE FABRIC.
3. CITY WILL REMOVE HAZARDOUS MATERIALS FROM WELL SITE, INCLUDING FLUORIDE AND CHLORINE FROM WITHIN CHEMICAL SHED.
4. CONTRACTOR SHALL REMOVE AND DISPOSE OF (E) ELECTRICAL BUILDING AND ITS FOUNDATION TO GRADE. EXISTING ELECTRICAL SERVICE FROM SMUD SHALL BE PROTECTED ON TEMPORARY SUPPORTS UNTIL NEW SERVICE IS INSTALLED.
5. CONTRACTOR SHALL REMOVE THE (E) CHLORINE LEAK DETECTOR AND RETURN TO CITY.
6. CONTRACTOR SHALL REMOVE AND SALVAGE THE (E) PLC CABINET FROM WITHIN CHEMICAL SHED.
7. CONTRACTOR SHALL SAWCUT (E) CONDUIT AND PIPE STUBS FLUSH WITH GRADE.

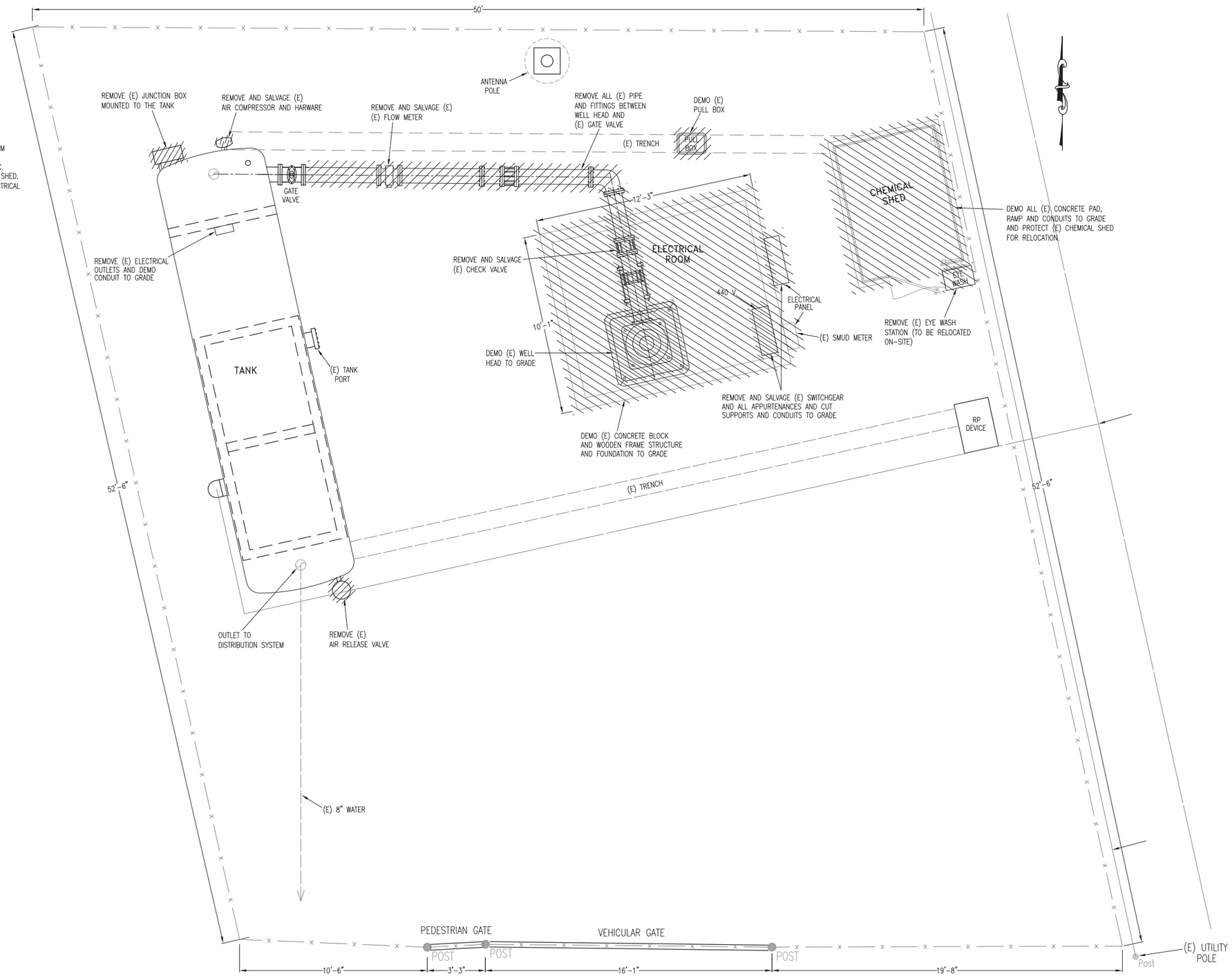

WELL REHABILITATION PROJECT PHASE 3
R:\Civil3D Projects\Z14110105_Well-Rehab_Ph3\Dwgs

PN: Z14110104 WELL REHABILITATION PROJECT PHASE 3

PN: Z14110105

REVISIONS			
NO.	DESCRIPTION	DATE	BY

BENCH MARK ELEV. _____
DESCRIPTION:

FIELD BOOK

SCALE:
H: N.A.
V: N.A.

1"
ON ORIGINAL SCALE DRAWING ADJUST SCALED DIMENSIONS IF THIS DOES NOT SCALE AT 1"

CITY OF SACRAMENTO
DEPARTMENT OF UTILITIES

DRAWN BY: A. VELAZQUEZ
DATE: SEP 2014
DESIGNED BY: M. THOMAS
R.C.E. NO. C66780 DATE: SEP 2014
CHECKED BY: D. SHERRY
R.C.E. NO. C63770 DATE: SEP 2014

REGISTERED PROFESSIONAL ENGINEER
REGAN ELIZABETH THOMAS
No. C66780
Exp. 09/30/14
CIVIL
STATE OF CALIFORNIA

IMPROVEMENT PLANS FOR:
WELL REHABILITATION PROJECT PHASE 3
WELL# 122 DEMOLITION PLAN
NEAR 1551 JULIESSE AVE (APN 265-0191-002)

GIS GRID NO.
GOT GO
PN: Z14110105

DWG. NO. C-7
SHEET 33 OF 54

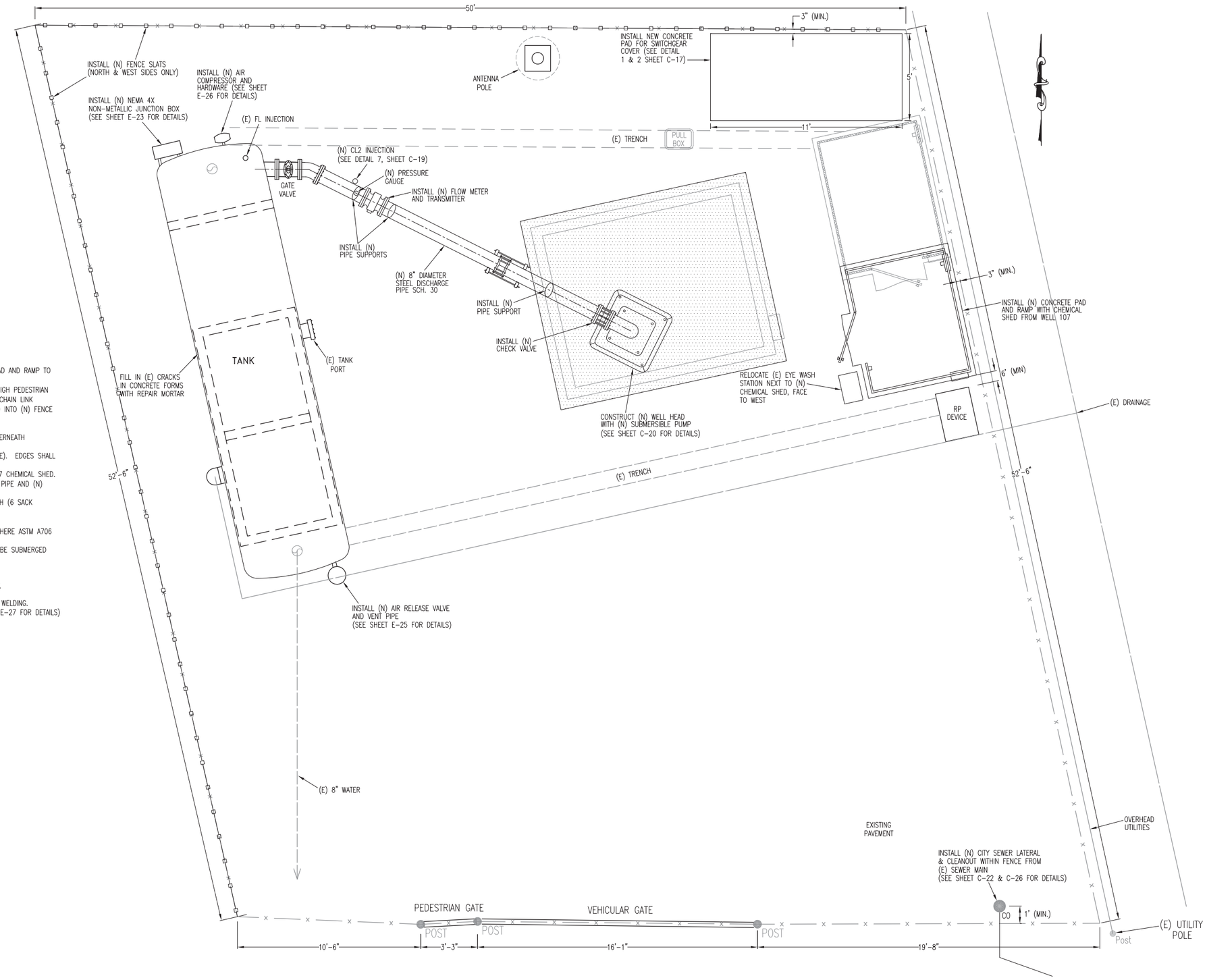

CONSTRUCTION NOTES (WELL 122):

1. CONTRACTOR SHALL RELOCATE (E) CHEMICAL SHED FROM WELL 107 TO SITE. CONTRACTOR SHALL CONSTRUCT (N) CONCRETE PAD AND RAMP TO SHED WITH (N) CONDUIT AND PIPING INSTALLED THROUGH PAD FOUNDATION.
2. CONTRACTOR SHALL EXTEND (E) GALVANIZED FENCE POSTS TO 8-FEET IN HEIGHT, INSTALL (N) TOP RAIL, INSTALL (N) 8-FOOT HIGH PEDESTRIAN AND VEHICULAR GATES, INSTALL (N) 3-BAND BARBED WIRE AND EXTENSIONS, AND INSTALL (N) 9-GAUGE 2X2 KNUCKLE BARBED CHAIN LINK FENCE. POST EXTENSIONS SHALL BE WELDED TO (E) POSTS AND COLD GALVANIZED. GREEN FENCE SLATS SHALL BE INSERTED INTO (N) FENCE FABRIC ALONG THE WEST AND NORTH SIDES OF THE SITE.
3. CONTRACTOR SHALL RELOCATE (E) PULL BOX, AS NECESSARY, TO ELIMINATE CONFLICTS WITH (N) SWITCHGEAR COVER AND PAD.
4. CONTRACTOR SHALL FILL IN ALL CRACKS LARGER THAN 1/8" FOUND WITHIN CONCRETE DRAINAGE STRUCTURE AND SUPPORTS UNDERNEATH HYDROPNEUMATIC TANK.
5. EXPOSED GROUND FROM DEMOLITION WORK SHALL BE REPAIRED WITH 3" THICK ASPHALT SECTION (NO LARGER THAN ½" AGGREGATE). EDGES SHALL BE SAWCUT AND SPRAYED WITH TACK COAT PRIOR TO ASPHALT INSTALLATION.
6. CONTRACTOR SHALL INSTALL (N) CHLORINE LEAK DETECTOR IN SAME LOCATION AS (E) CHLORINE LEAK DETECTOR FROM WELL 107 CHEMICAL SHED.
7. CONTRACTOR SHALL PROVIDE ALL PIPE AND FITTINGS NECESSARY TO CONNECT THE (N) WELL HEAD DISCHARGE PIPE TO THE (E) PIPE AND (N) FLOW METER.
8. FOR THE WELL HEAD, CONTRACTOR SHALL PROVIDE CLASS B CONCRETE WITH 4000-PSI MINIMUM 28-DAY COMPRESSIVE STRENGTH (6 SACK CEMENT CONTENT, 4" MAXIMUM SLUMP) PER CSSS SECTIONS 10 AND 20.
9. CONTRACTOR SHALL SAW CUT AND REMOVE (E) ASPHALT TO FACILITATE THE INSTALLATION OF THE (N) SWITCHGEAR COVER.
10. CONTRACTOR SHALL USE INTERMEDIATE GRADE ASTM A615 (GRADE 60) REINFORCING, EXCEPT WHEN SUBMERGED UNDERWATER WHERE ASTM A706 (GRADE 60) SHALL BE USED.
11. THE FOLLOWING REINFORCEMENT CLEARANCES SHALL BE OBSERVED: 3" FOR SURFACES POURED AGAINST THE EARTH OR ARE TO BE SUBMERGED UNDER WATER, 2" FOR FORMED SURFACES EXPOSED TO EARTH OR WEATHER, AND 1.5" FOR ALL OTHER SURFACES.
12. A ¾" CHAMFER OR TOOLED EDGE SHALL BE PROVIDED AT EXPOSED EDGES OF CONCRETE, UNLESS OTHERWISE SHOWN.
13. REINFORCING, ANCHOR BOLTS, ETC. SHALL BE SECURED RIGIDLY IN PLACE PRIOR TO POURING CONCRETE.
14. HORIZONTAL REINFORCING SHALL BE SUPPORTED ON MORTAR BLOCK (OR OTHER APPROVED METHOD OF SUPPORT) AT FOOTINGS.
15. HOOKS SHALL BE ACI STANDARD HOOKS, UNLESS NOTED OTHERWISE.
16. CONTRACTOR SHALL CONFORM TO AISC SPECS AND CODE OF STANDARD PRACTICES. AWS SPECIFICATIONS SHALL BE USED FOR WELDING.
17. CONTRACTOR SHALL INSTALL (N) WELD-O-LET FOR (N) PRESSURE GAUGE ON DOWNSTREAM SIDE OF FLOW METER. (SEE SHEET E-27 FOR DETAILS)

WELL REHABILITATION PROJECT PHASE 3
R:\Civil3D Projects\Z14110105_Well-Rehab_Ph3\Dwgs

PN: Z14110104 WELL REHABILITATION PROJECT PHASE 3

PN: Z14110105

REVISIONS			
NO.	DESCRIPTION	DATE	BY

BENCH MARK ELEV. _____
DESCRIPTION:

FIELD BOOK
SCALE: H: N.A. V: N.A.

1" — ON ORIGINAL SCALE DRAWING ADJUST SCALED DIMENSIONS IF THIS DOES NOT SCALE AT 1"

CITY OF SACRAMENTO
DEPARTMENT OF UTILITIES

DRAWN BY: A. VELAZQUEZ DATE: SEP 2014
DESIGNED BY: M. THOMAS R.C.E. NO. C66780 DATE: SEP 2014
CHECKED BY: D. SHERRY R.C.E. NO. C63770 DATE: SEP 2014

REGISTERED PROFESSIONAL ENGINEER KEAN ELIZABETH THOMAS No. C66780 Exp. 09/30/14 CIVIL STATE OF CALIFORNIA

IMPROVEMENT PLANS FOR:
WELL REHABILITATION PROJECT PHASE 3
WELL# 122 CIVIL SITE PLAN
NEAR 1551 JULIESSE AVE (APN 265-0191-002)

GIS GRID NO. GOT GRID NO. PN: Z14110105

DWG. NO. C-8
SHEET 36 OF 54

DEMOLITION NOTES (WELL 126):

1. CONTRACTOR SHALL REMOVE AND DISPOSE OF (E) FENCE FABRIC, BARBED WIRE, AND FENCE SLATS WITHIN FENCE FABRIC.
2. CITY WILL REMOVE HAZARDOUS MATERIALS FROM WELL SITE, INCLUDING FLUORIDE AND CHLORINE FROM WITHIN CHEMICAL SHED.
3. CONTRACTOR SHALL REMOVE AND DISPOSE OF (E) ELECTRICAL BUILDING AND ITS FOUNDATION TO GRADE. EXISTING ELECTRICAL SERVICE FROM SMUD SHALL BE PROTECTED ON (E) UTILITY POLE AND GUY WIRE UNTIL NEW SERVICE IS INSTALLED.
4. CONTRACTOR SHALL REMOVE THE (E) CHLORINE LEAK DETECTOR AND RETURN TO CITY.
5. CONTRACTOR SHALL REMOVE AND SALVAGE THE (E) PLC CABINET FROM WITHIN CHEMICAL SHED.
6. CONTRACTOR SHALL SAWCUT (E) CONDUIT AND PIPE STUBS FLUSH WITH GRADE.

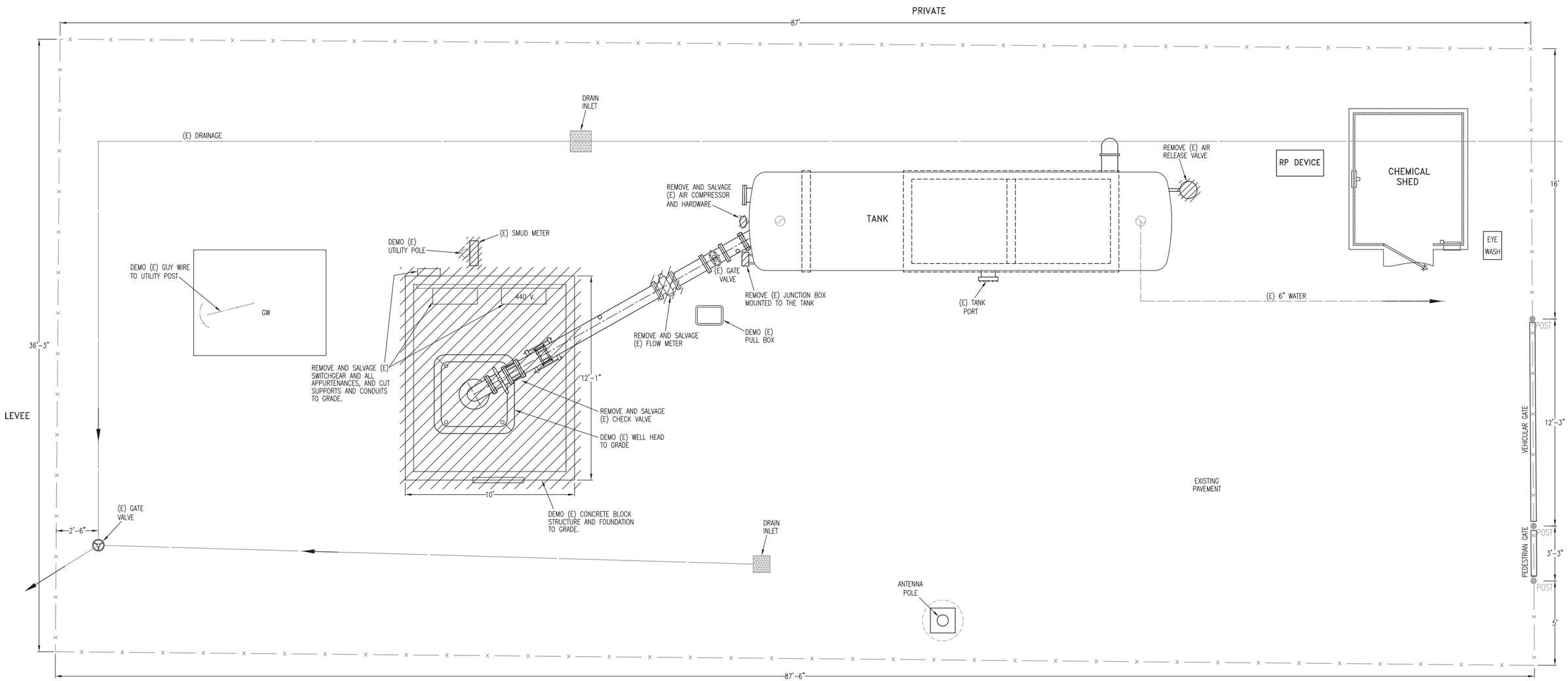

REVISIONS			
NO.	DESCRIPTION	DATE	BY

BENCH MARK ELEV. _____
DESCRIPTION:

FIELD BOOK

SCALE: H: N.A. V: N.A.

1" — ON ORIGINAL SCALE DRAWING ADJUST SCALED DIMENSIONS IF THIS DOES NOT SCALE AT 1"

CITY OF SACRAMENTO
DEPARTMENT OF UTILITIES

DRAWN BY: A. VELAZQUEZ
DATE: SEP 2014

DESIGNED BY: M. THOMAS
R.C.E. NO. C66780 DATE: SEP 2014

CHECKED BY: D. SHERRY
R.C.E. NO. C63770 DATE: SEP 2014

REGISTERED PROFESSIONAL ENGINEER — MEGAN ELIZABETH THOMAS — No. C66780 — Exp. 09/30/14 — CIVIL — STATE OF CALIFORNIA

IMPROVEMENT PLANS FOR:

WELL REHABILITATION PROJECT PHASE 3
WELL# 126 DEMOLITION PLAN
NEAR 1324 RIVERA DR (APN 251-0260-005)

GIS GRID NO.
GOT GRID NO.

PN: Z14110105

DWG. NO. C-9
SHEET 37 OF 54

PN: Z14110105

WELL REHABILITATION PROJECT PHASE 3
R:\Civil3D Projects\Z14110105_Well-Rehab_Ph3\Dwgs

PN: Z14110104 WELL REHABILITATION PROJECT PHASE 3

CONSTRUCTION NOTES (WELL 126):

1. CONTRACTOR SHALL EXTEND (E) GALVANIZED FENCE POSTS TO 8-FEET IN HEIGHT, INSTALL (N) TOP RAIL, INSTALL (N) 8-FOOT HIGH PEDESTRIAN AND VEHICULAR GATES, INSTALL (N) 3-BAND BARBED WIRE AND EXTENSIONS, AND INSTALL (N) 9-GAUGE 2X2 KNUCKLE BARBED CHAIN LINK FENCE. POST EXTENSIONS SHALL BE WELDED TO (E) POSTS AND COLD GALVANIZED. GREEN FENCE SLATS SHALL BE INSERTED INTO (N) FENCE FABRIC ALONG THE WEST SIDE OF THE SITE.
2. CONTRACTOR SHALL FILL IN ALL CRACKS LARGER THAN 1/8" FOUND WITHIN CONCRETE DRAINAGE STRUCTURE AND SUPPORTS UNDERNEATH HYDROPNEUMATIC TANK.
3. EXPOSED GROUND FROM DEMOLITION WORK SHALL BE REPAIRED WITH 3" THICK ASPHALT SECTION (NO LARGER THAN ½" AGGREGATE). EDGES SHALL BE SAWCUT AND SPRAYED WITH TACK COAT PRIOR TO ASPHALT INSTALLATION.
4. CONTRACTOR SHALL INSTALL (N) CHLORINE LEAK DETECTOR IN SAME LOCATION AS (E) CHLORINE LEAK DETECTOR.
5. CONTRACTOR SHALL PROVIDE ALL PIPE AND FITTINGS NECESSARY TO CONNECT THE (N) WELL HEAD DISCHARGE PIPE TO THE (E) PIPE AND (N) FLOW METER.
6. FOR THE WELL HEAD, CONTRACTOR SHALL PROVIDE CLASS B CONCRETE WITH 4000-PSI MINIMUM 28-DAY COMPRESSIVE STRENGTH (6 SACK CEMENT CONTENT, 4" MAXIMUM SLUMP) PER CSSS SECTIONS 10 AND 20.
7. CONTRACTOR SHALL SAW CUT AND REMOVE (E) ASPHALT TO FACILITATE THE INSTALLATION OF THE (N) SWITCHGEAR COVER.
8. CONTRACTOR SHALL USE INTERMEDIATE GRADE ASTM A615 (GRADE 60) REINFORCING, EXCEPT WHEN SUBMERGED UNDERWATER WHERE ASTM A706 (GRADE 60) SHALL BE USED.
9. THE FOLLOWING REINFORCEMENT CLEARANCES SHALL BE OBSERVED: 3" FOR SURFACES POURED AGAINST THE EARTH OR ARE TO BE SUBMERGED UNDER WATER, 2" FOR FORMED SURFACES EXPOSED TO EARTH OR WEATHER, AND 1.5" FOR ALL OTHER SURFACES.
10. A ¾" CHAMFER OR TOOLED EDGE SHALL BE PROVIDED AT EXPOSED EDGES OF CONCRETE, UNLESS OTHERWISE SHOWN.
11. REINFORCING, ANCHOR BOLTS, ETC. SHALL BE SECURED RIGIDLY IN PLACE PRIOR TO POURING CONCRETE.
12. HORIZONTAL REINFORCING SHALL BE SUPPORTED ON MORTAR BLOCK (OR OTHER APPROVED METHOD OF SUPPORT) AT FOOTINGS.
13. HOOKS SHALL BE ACI STANDARD HOOKS, UNLESS NOTED OTHERWISE.
14. CONTRACTOR SHALL CONFORM TO AISC SPECS AND CODE OF STANDARD PRACTICES. AWS SPECIFICATIONS SHALL BE USED FOR WELDING.
15. CONTRACTOR SHALL INSTALL (N) WELD-O-LET FOR (N) PRESSURE GAUGE ON DOWNSTREAM SIDE OF FLOW METER. (SEE SHEET E-27 FOR DETAILS)

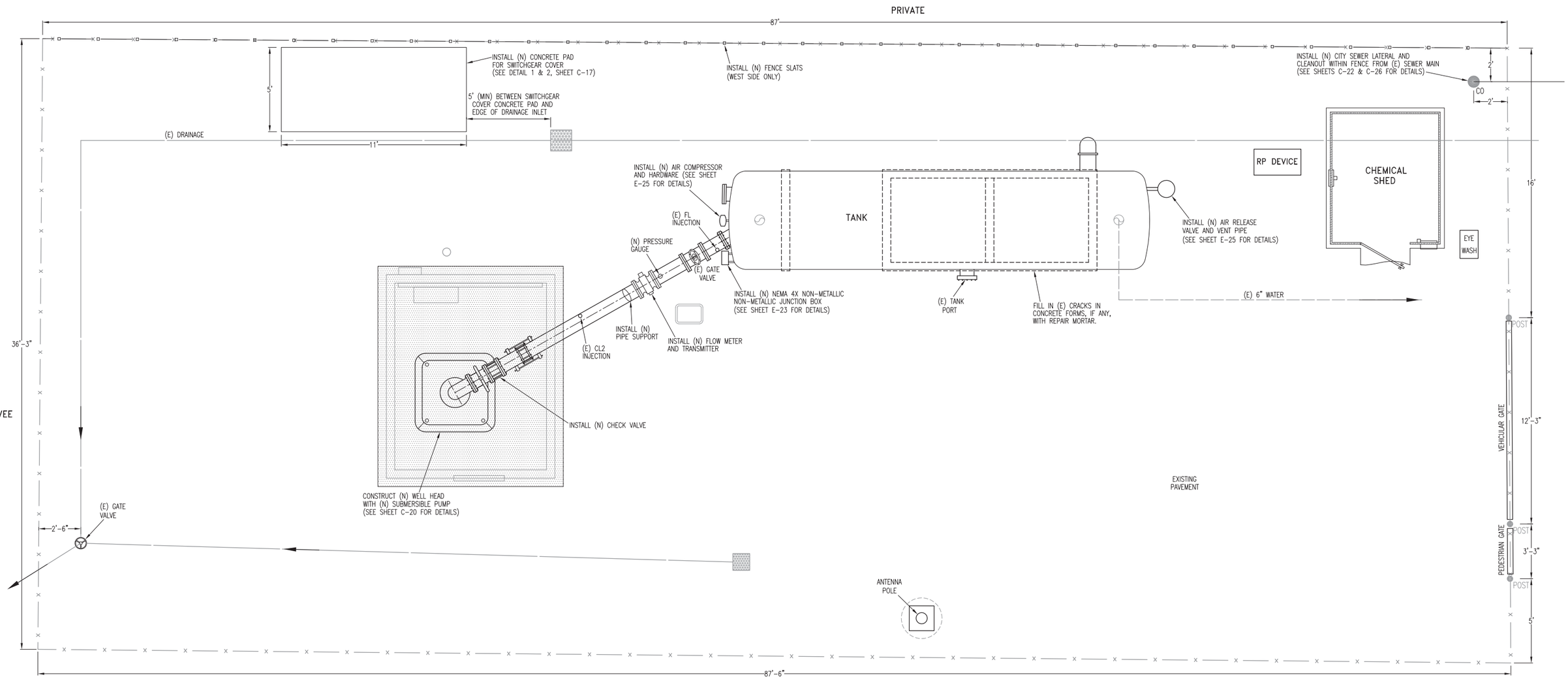

WELL REHABILITATION PROJECT PHASE 3
R:\Civil3D Projects\Z14110105_Well-Rehab_Ph3\Dwgs

PN: Z14110104 WELL REHABILITATION PROJECT PHASE 3

PN: Z14110105

REVISIONS			
NO.	DESCRIPTION	DATE	BY

BENCH MARK ELEV. _____
DESCRIPTION:

FIELD BOOK
SCALE:
H: N.A.
V: N.A.

1"
ON ORIGINAL SCALE DRAWING ADJUST SCALED DIMENSIONS IF THIS DOES NOT SCALE AT 1"

CITY OF SACRAMENTO
DEPARTMENT OF UTILITIES

DRAWN BY: A. VELAZQUEZ
DATE: SEP 2014
DESIGNED BY: M. THOMAS
R.C.E. NO. C66780 DATE: SEP 2014
CHECKED BY: D. SHERRY
R.C.E. NO. C63770 DATE: SEP 2014

REGISTERED PROFESSIONAL ENGINEER
MEGAN D. ELIZABETH THOMAS
No. C66780
Exp. 09/30/14
CIVIL
STATE OF CALIFORNIA

IMPROVEMENT PLANS FOR:
WELL REHABILITATION PROJECT PHASE 3
WELL# 126 CIVIL SITE PLAN
NEAR 1324 RIVERA DR (APN 251-0260-005)

GIS GRID NO.
GOT GC
PN: Z14110105

DWG. NO. C-10
SHEET 38 OF 54

DEMOLITION NOTES (WELL 129):

1. CONTRACTOR SHALL REMOVE AND DISPOSE OF (E) FENCE FABRIC, BARBED WIRE, AND FENCE SLATS WITHIN FENCE FABRIC.
2. CITY WILL REMOVE HAZARDOUS MATERIALS FROM WELL SITE, INCLUDING FLUORIDE AND CHLORINE FROM WITHIN CHEMICAL SHED.
3. CONTRACTOR SHALL PROTECT THE (E) ELECTRICAL SERVICE FROM SMUD ON (E) UTILITY POLE AND GUY WIRE UNTIL NEW SERVICE IS INSTALLED.
4. CONTRACTOR SHALL LOWER (E) WATER LINES WITHIN RP DEVICE CAGE INTO A (N) CHRISTY BOX INSTALLED FLUSH TO GRADE. CONTRACTOR SHALL INSTALL A (N) SHUTOFF VALVE ON THE LOWERED WATER LINES FOR ISOLATION OF SERVICE INTO THE CHEMICAL SHED.
5. CONTRACTOR SHALL REMOVE THE (E) CHLORINE LEAK DETECTOR AND RETURN TO CITY.
6. CONTRACTOR SHALL REMOVE AND SALVAGE THE (E) PLC CABINET FROM WITHIN CHEMICAL SHED.
7. CONTRACTOR SHALL SAWCUT (E) CONDUIT AND PIPE STUBS FLUSH WITH GRADE.
8. CONTRACTOR SHALL CAREFULLY REMOVE (E) SUBMERSIBLE PUMP AND MOTOR AND RETURN IT TO THE CITY. CONTRACTOR SHALL PROTECT EQUIPMENT UNTIL PICKED UP BY CITY FROM THE SITE.

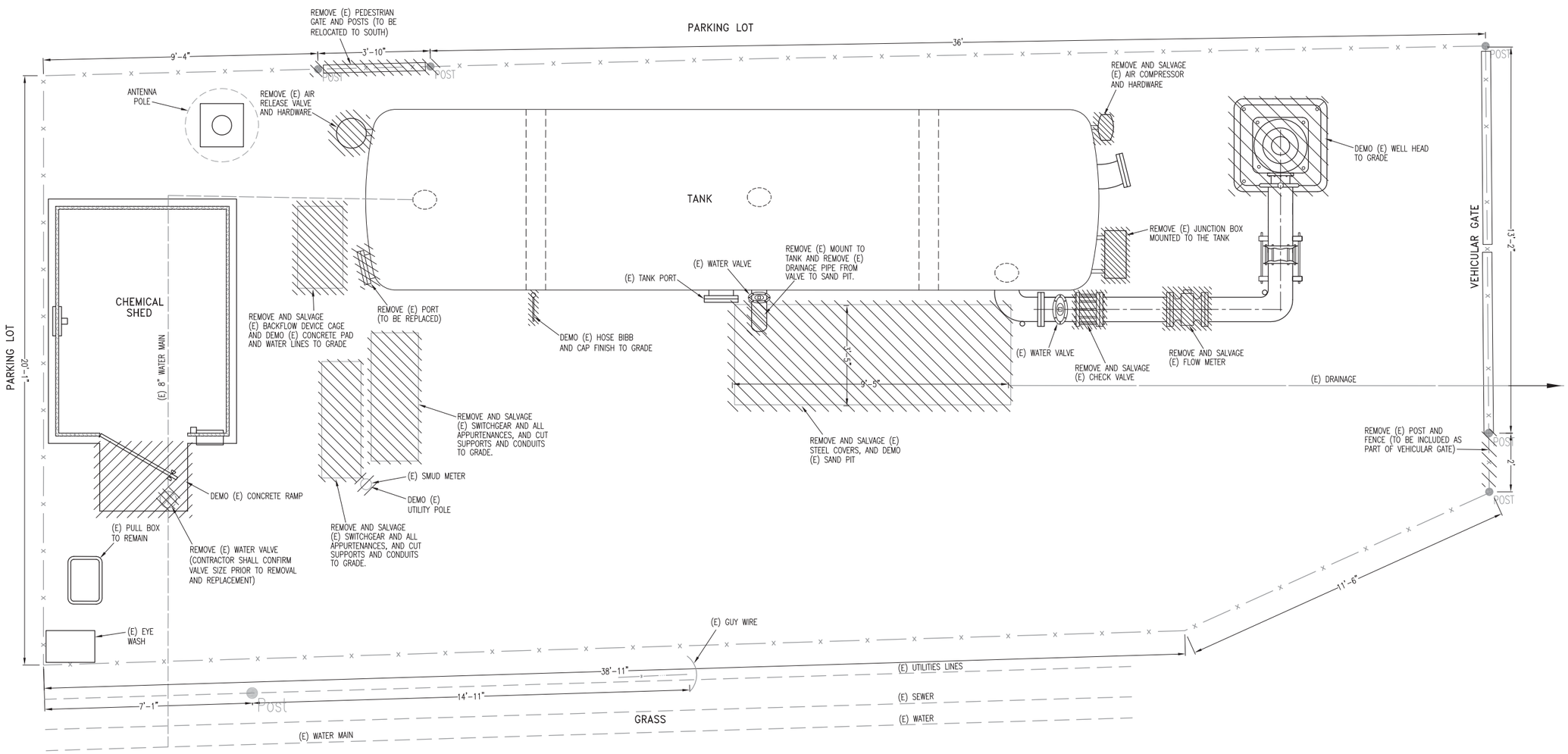

WELL REHABILITATION PROJECT PHASE 3
R:\Civil3D Projects\Z14110105_Well-Rehab_Ph3\Dwgs

PN: Z14110104 WELL REHABILITATION PROJECT PHASE 3

PN: Z14110105

REVISIONS			
NO.	DESCRIPTION	DATE	BY

BENCH MARK
DESCRIPTION:
ELEV. _____

FIELD BOOK

SCALE:
H: N.A.
V: N.A.

1"
ON ORIGINAL SCALE DRAWING ADJUST SCALED DIMENSIONS IF THIS DOES NOT SCALE AT 1"

CITY OF SACRAMENTO
DEPARTMENT OF UTILITIES

DRAWN BY: A. VELAZQUEZ
DATE: SEP 2014
DESIGNED BY: M. THOMAS
R.C.E. NO. C66780 DATE: SEP 2014
CHECKED BY: D. SHERRY
R.C.E. NO. C63770 DATE: SEP 2014

REGISTERED PROFESSIONAL ENGINEER
ALAN ELIZABETH THOMAS
No. C66780
Exp. 09/30/14
CIVIL
STATE OF CALIFORNIA

IMPROVEMENT PLANS FOR:
WELL REHABILITATION PROJECT PHASE 3
WELL# 129 DEMOLITION PLAN
NEAR 3904 RIO LINDA BLVD (APN 251-0051-002)

GIS GRID NO.
GOT GRID NO.
PN: Z14110105

DWG. NO.
C-11
SHEET
39
OF
54

CONSTRUCTION NOTES (WELL 129):

1. CONTRACTOR SHALL EXTEND (E) GALVANIZED FENCE POSTS TO 8-FEET IN HEIGHT, INSTALL (N) TOP RAIL, INSTALL (N) 8-FOOT HIGH PEDESTRIAN AND VEHICULAR GATES, INSTALL (N) 3-BAND BARBED WIRE AND EXTENSIONS, AND INSTALL (N) 9-GAUGE 2X2 KNUCKLE BARBED CHAIN LINK FENCE. POST EXTENSIONS SHALL BE WELDED TO (E) POSTS AND COLD GALVANIZED.
2. CONTRACTOR SHALL MATCH TOP ELEVATION TO (N) SAND PIT TO HIGHEST ELEVATION OF SURROUNDING GRADE. ASPHALT SHALL BE CUT AND REMOVED 2-FEET AROUND (N) SAND PIT BOUNDARIES AND (N) ASPHALT SHALL BE INSTALLED TO PROVIDE A SMOOTH TRANSITION BETWEEN TOP EDGE OF SAND PIT AND SURROUNDING ASPHALT.
3. CONTRACTOR SHALL FILL IN ALL CRACKS LARGER THAN 1/8" FOUND WITHIN CONCRETE SUPPORTS UNDERNEATH HYDROPNEUMATIC TANK.
4. EXPOSED GROUND FROM DEMOLITION WORK SHALL BE REPAIRED WITH 3" THICK ASPHALT SECTION (NO LARGER THAN ½" AGGREGATE). EDGES SHALL BE SAWCUT AND SPRAYED WITH TACK COAT PRIOR TO ASPHALT INSTALLATION.
5. CONTRACTOR SHALL CUT AND REMOVE (E) WATER VALVE ON WATER MAIN AND INSTALL A NEW 6" WATER VALVE IN ITS PLACE. WATER VALVE WORK SHALL BE COMPLETED DURING ONE (1) WORKING DAY. WHILE WATER MAIN IS DOWN FOR VALVE INSTALLATION, CONTRACTOR SHALL ALSO COMPLETE THE TAP FOR THE NEW 1" HOSE BIB.
6. CONTRACTOR SHALL INSTALL (N) CHLORINE LEAK DETECTOR IN SAME LOCATION AS (E) CHLORINE LEAK DETECTOR.
7. CONTRACTOR SHALL PROVIDE ALL PIPE AND FITTINGS NECESSARY TO CONNECT THE (N) WELL HEAD DISCHARGE PIPE TO THE (E) PIPE AND (N) FLOW METER.
8. FOR THE WELL HEAD, CONTRACTOR SHALL PROVIDE CLASS B CONCRETE WITH 4000-PSI MINIMUM 28-DAY COMPRESSIVE STRENGTH (6 SACK CEMENT CONTENT, 4" MAXIMUM SLUMP) PER CSSS SECTIONS 10 AND 20.
9. CONTRACTOR SHALL SAW CUT AND REMOVE (E) ASPHALT TO FACILITATE THE INSTALLATION OF THE (N) SWITCHGEAR COVER.
10. CONTRACTOR SHALL USE INTERMEDIATE GRADE ASTM A615 (GRADE 60) REINFORCING, EXCEPT WHEN SUBMERGED UNDERWATER WHERE ASTM A706 (GRADE 60) SHALL BE USED.
11. THE FOLLOWING REINFORCEMENT CLEARANCES SHALL BE OBSERVED: 3" FOR SURFACES POURED AGAINST THE EARTH OR ARE TO BE SUBMERGED UNDER WATER, 2" FOR FORMED SURFACES EXPOSED TO EARTH OR WEATHER, AND 1.5" FOR ALL OTHER SURFACES.
12. A ¾" CHAMFER OR TOOLED EDGE SHALL BE PROVIDED AT EXPOSED EDGES OF CONCRETE, UNLESS OTHERWISE SHOWN.
13. REINFORCING, ANCHOR BOLTS, ETC. SHALL BE SECURED RIGIDLY IN PLACE PRIOR TO POURING CONCRETE.
14. HORIZONTAL REINFORCING SHALL BE SUPPORTED ON MORTAR BLOCK (OR OTHER APPROVED METHOD OF SUPPORT) AT FOOTINGS.
15. HOOKS SHALL BE ACI STANDARD HOOKS, UNLESS NOTED OTHERWISE.
16. CONTRACTOR SHALL CONFORM TO AISC SPECS AND CODE OF STANDARD PRACTICES. AWS SPECIFICATIONS SHALL BE USED FOR WELDING.
17. CONTRACTOR SHALL INSTALL (N) WELD-O-LET FOR (N) PRESSURE GAUGE ON DOWNSTREAM SIDE OF FLOW METER. (SEE SHEET E-27 FOR DETAILS)

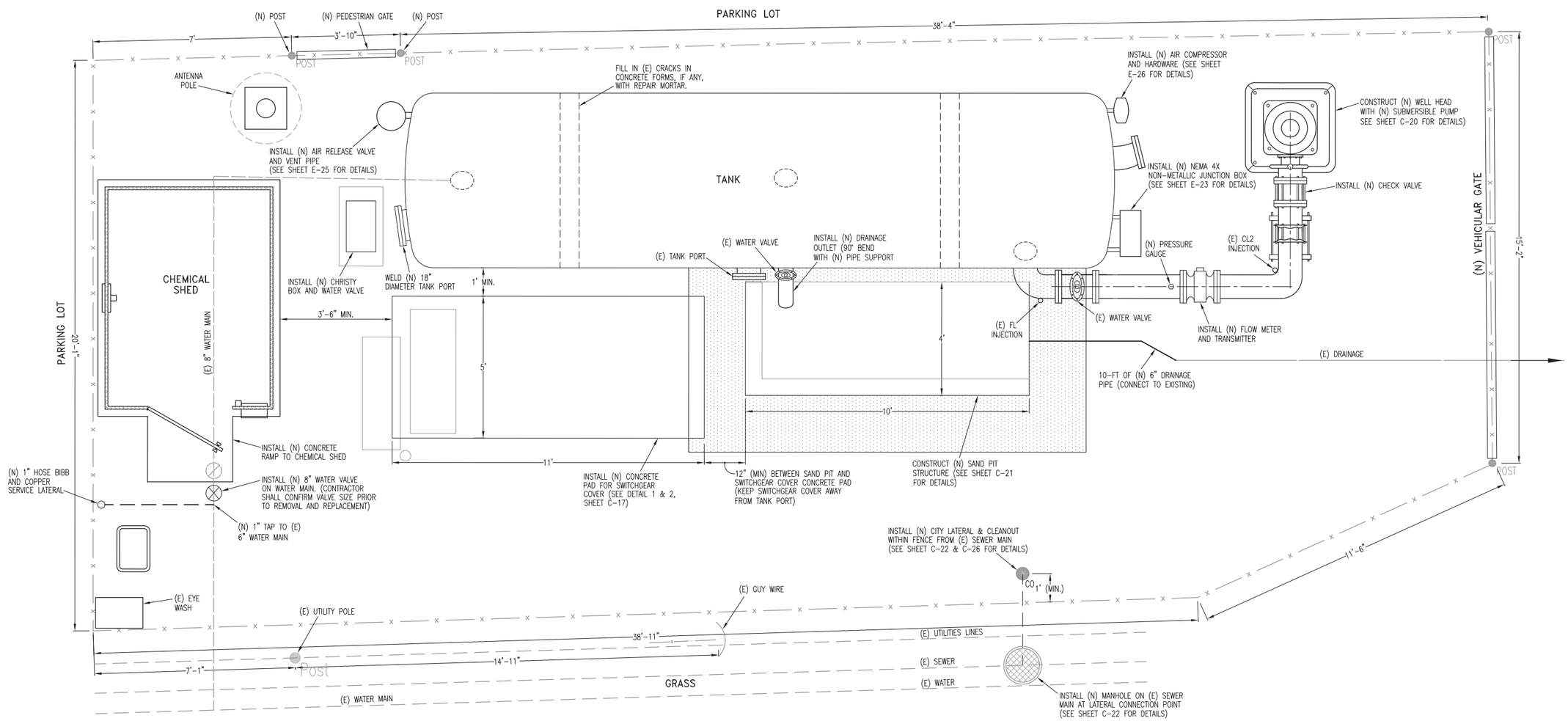

WELL REHABILITATION PROJECT PHASE 3
R:\Civil3D Projects\Z14110105_Well-Rehab_Ph3\Dwgs

PN: Z14110104 WELL REHABILITATION PROJECT PHASE 3

REVISIONS			
NO.	DESCRIPTION	DATE	BY

BENCH MARK ELEV. _____
DESCRIPTION:

FIELD BOOK

SCALE:
H: N.A.
V: N.A.

1"
ON ORIGINAL SCALE DRAWING ADJUST SCALED DIMENSIONS IF THIS DOES NOT SCALE AT 1"

CITY OF SACRAMENTO
DEPARTMENT OF UTILITIES

DRAWN BY: A. VELAZQUEZ
DATE: SEP 2014
DESIGNED BY: M. THOMAS
R.C.E. NO. C66780 DATE: SEP 2014
CHECKED BY: D. SHERRY
R.C.E. NO. C63770 DATE: SEP 2014

REGISTERED PROFESSIONAL ENGINEER
REGAN ELIZABETH TERRY
No. C66780
Exp. 09/30/14
CIVIL
STATE OF CALIFORNIA

IMPROVEMENT PLANS FOR:
WELL REHABILITATION PROJECT PHASE 3
WELL# 129 CIVIL SITE PLAN
NEAR 3904 RIO LINDA BLVD (APN 251-0051-002)

GIS GRID NO.
GOT GRID NO.

PN: Z14110105

DWG. NO. C-12
SHEET 40 OF 54

PN: Z14110105

DEMOLITION NOTES (WELL 133):

1. CONTRACTOR SHALL REMOVE AND DISPOSE OF ALL (E) ASPHALT ON-SITE, AND COMPLETE MINOR RE-GRADING FOR (N) DRAINAGE FACILITIES AND REPAVING OF SITE.
2. CONTRACTOR SHALL REMOVE AND DISPOSE OF (E) FENCE FABRIC, BARBED WIRE, AND FENCE SLATS WITHIN FENCE FABRIC.
3. CITY WILL REMOVE HAZARDOUS MATERIALS FROM WELL SITE, INCLUDING FLUORIDE AND CHLORINE FROM WITHIN CHEMICAL SHED.
4. CONTRACTOR SHALL REMOVE AND DISPOSE OF (E) ELECTRICAL BUILDING AND ITS FOUNDATION TO GRADE. EXISTING ELECTRICAL SERVICE FROM SMUD SHALL BE PROTECTED ON TEMPORARY SUPPORTS UNTIL NEW SERVICE IS INSTALLED.
5. CONTRACTOR SHALL LOWER (E) WATER LINES WITHIN RP DEVICE CAGE INTO A (N) CHRISTY BOX INSTALLED FLUSH TO GRADE. CONTRACTOR SHALL INSTALL A (N) SHUTOFF VALVE ON THE LOWERED WATER LINES FOR ISOLATION OF SERVICE INTO THE CHEMICAL SHED.
6. CONTRACTOR SHALL REMOVE THE (E) CHLORINE LEAK DETECTOR AND RETURN TO CITY.
7. CONTRACTOR SHALL REMOVE AND SALVAGE THE (E) PLC CABINET FROM WITHIN CHEMICAL SHED.
8. CONTRACTOR SHALL SAWCUT (E) CONDUIT AND PIPE STUBS FLUSH WITH GRADE.

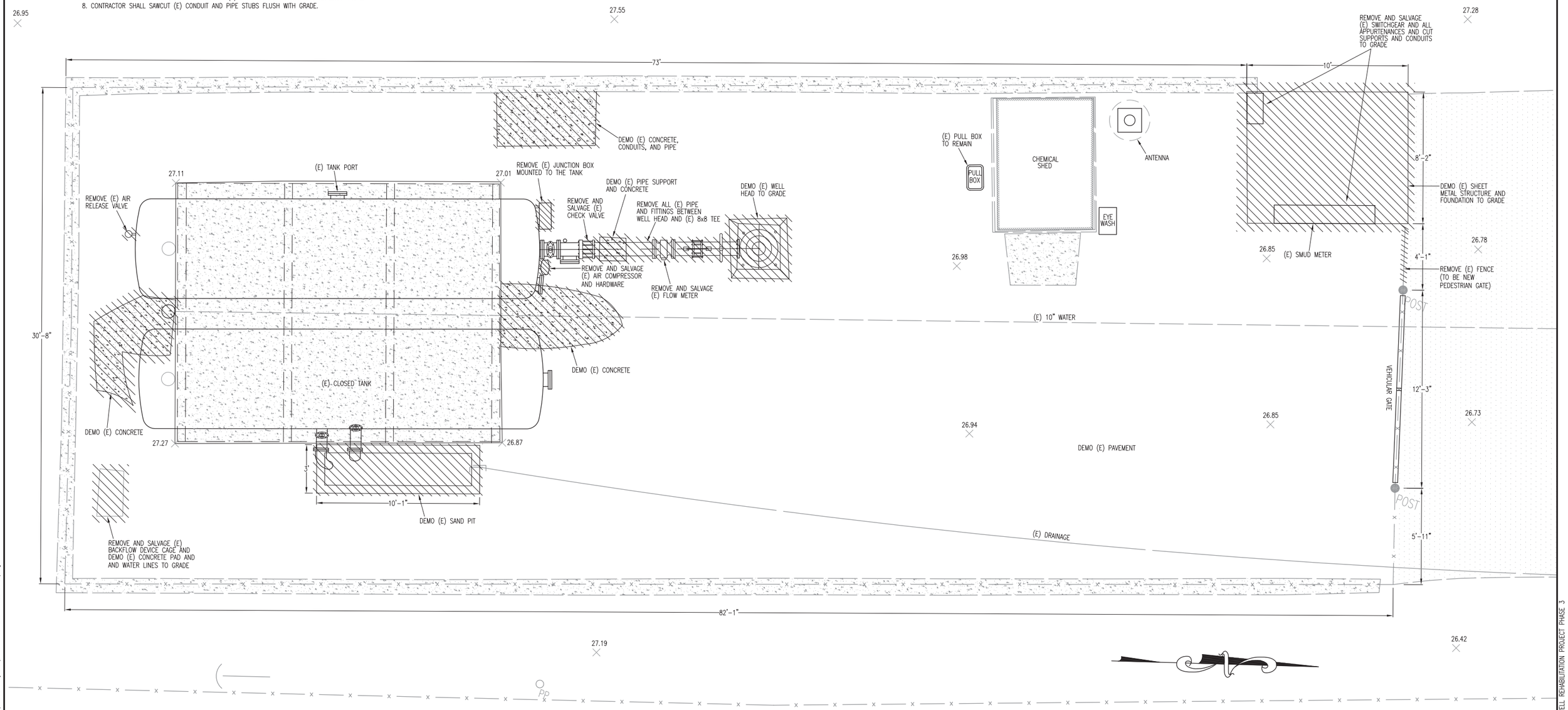

WELL REHABILITATION PROJECT PHASE 3
R:\Civil3D Projects\Z14110105_Well-Rehab_Ph3\Dwgs

PN: Z14110104 WELL REHABILITATION PROJECT PHASE 3

PN: Z14110105

REVISIONS			
NO.	DESCRIPTION	DATE	BY

BENCH MARK ELEV. _____
DESCRIPTION:

FIELD BOOK

SCALE:
H: N.A.
V: N.A.

1"
ON ORIGINAL SCALE DRAWING ADJUST SCALED DIMENSIONS IF THIS DOES NOT SCALE AT 1"

CITY OF SACRAMENTO
DEPARTMENT OF UTILITIES

DRAWN BY: A. VELAZQUEZ
DATE: SEP 2014
DESIGNED BY: M. THOMAS
R.C.E. NO. C66780 DATE: SEP 2014
CHECKED BY: D. SHERRY
R.C.E. NO. C63770 DATE: SEP 2014

REGISTERED PROFESSIONAL ENGINEER
MEAN ELIZABETH THOMAS
No. C66780
Exp. 09/30/14
CIVIL
STATE OF CALIFORNIA

IMPROVEMENT PLANS FOR:
WELL REHABILITATION PROJECT PHASE 3
WELL# 133 DEMOLITION PLAN
(NEAR 4600 PELL DRIVE (APN 237-0022-036)

GIS GRID NO.
GOT GRID NO.
PN: Z14110105

DWG. NO. C-13
SHEET 41 OF 54

CONSTRUCTION NOTES (WELL 133):

1. CONTRACTOR SHALL EXTEND (E) GALVANIZED FENCE POSTS TO 8-FEET IN HEIGHT, INSTALL (N) TOP RAIL, INSTALL (N) 8-FOOT HIGH PEDESTRIAN AND VEHICULAR GATES, INSTALL (N) 3-BAND BARBED WIRE AND EXTENSIONS, AND INSTALL (N) 9-GAUGE 2X2 KNUCKLE BARBED CHAIN LINK FENCE. POST EXTENSIONS SHALL BE WELDED TO (E) POSTS AND COLD GALVANIZED.
2. CONTRACTOR SHALL MATCH TOP ELEVATION TO (N) SAND PIT TO (E) CONCRETE BASE OF STORAGE TANKS.
3. CONTRACTOR SHALL REPAVE ENTIRE SITE WITH 3" THICK ASPHALT SECTION (NO LARGER THAN ½" AGGREGATE). LOCATIONS WHERE ASPHALT AND CONCRETE MEET SHALL BE SPRAYED WITH TACK COAT PRIOR TO ASPHALT INSTALLATION. ASPHALT SHALL BE INSTALLED SUCH THAT THERE ARE SMOOTH TRANSITIONS TO TOP EDGE OF (N) SAND PIT AND CONCRETE BORDER AROUND THE SITE. ASPHALT SHALL BE INSTALLED WITH A 2% SLOPE AWAY FROM THE CENTER OF THE SITE WITH NO LOW SPOTS WHERE WATER CAN COLLECT.
4. CONTRACTOR SHALL INSTALL DRAINAGE SWALES ALONG THE EAST AND WEST SIDES OF THE WELL PROPERTY ON THE EXTERIOR OF THE FENCE. DRAINAGE SWALES SHALL EXTEND TO THE NORTH END OF THE SITE WHERE IT SHALL TRANSITION TO DAYLIGHT AND MATCH (E) GRADES.
5. CONTRACTOR SHALL FILL IN ALL CRACKS LARGER THAN 1/8" FOUND WITHIN CONCRETE SUPPORTS UNDERNEATH HYDROPNEUMATIC TANK.
6. CONTRACTOR SHALL INSTALL (N) CHLORINE LEAK DETECTOR IN SAME LOCATION AS (E) CHLORINE LEAK DETECTOR.
7. CONTRACTOR SHALL PROVIDE ALL PIPE AND FITTINGS NECESSARY TO CONNECT THE (N) WELL HEAD DISCHARGE PIPE TO THE (E) PIPE AND (N) FLOW METER.
8. FOR THE WELL HEAD, CONTRACTOR SHALL PROVIDE CLASS B CONCRETE WITH 4000-PSI MINIMUM 28-DAY COMPRESSIVE STRENGTH (6 SACK CEMENT CONTENT, 4" MAXIMUM SLUMP) PER CSSS SECTIONS 10 AND 20.
9. CONTRACTOR SHALL SAW CUT AND REMOVE (E) ASPHALT TO FACILITATE THE INSTALLATION OF THE (N) SWITCHGEAR COVER.
10. CONTRACTOR SHALL USE INTERMEDIATE GRADE ASTM A615 (GRADE 60) REINFORCING, EXCEPT WHEN SUBMERGED UNDERWATER WHERE ASTM A706 (GRADE 60) SHALL BE USED.
11. THE FOLLOWING REINFORCEMENT CLEARANCES SHALL BE OBSERVED: 3" FOR SURFACES POURED AGAINST THE EARTH OR ARE TO BE SUBMERGED UNDER WATER, 2" FOR FORMED SURFACES EXPOSED TO EARTH OR WEATHER, AND 1.5" FOR ALL OTHER SURFACES.
12. A ¾" CHAMFER OR TOOLED EDGE SHALL BE PROVIDED AT EXPOSED EDGES OF CONCRETE, UNLESS OTHERWISE SHOWN.
13. REINFORCING, ANCHOR BOLTS, ETC. SHALL BE SECURED RIGIDLY IN PLACE PRIOR TO POURING CONCRETE.
14. HORIZONTAL REINFORCING SHALL BE SUPPORTED ON MORTAR BLOCK (OR OTHER APPROVED METHOD OF SUPPORT) AT FOOTINGS.
15. HOOKS SHALL BE ACI STANDARD HOOKS, UNLESS NOTED OTHERWISE.
16. CONTRACTOR SHALL CONFORM TO AISC SPECS AND CODE OF STANDARD PRACTICES. AWS SPECIFICATIONS SHALL BE USED FOR WELDING.
17. AFTER PUMP TESTING IS COMPLETED (AFTER WELL TESTING), IF FINAL PRODUCTION OF WELL, AS DETERMINED BY ENGINEER, IS ≤ 1000 GPM THEN DISCHARGE PIPE AND FITTINGS FROM WELLHEAD TO THE HYDROPNEUMATIC TANK SHALL BE INSTALLED PER THE DETAIL BELOW. IF THE PRODUCTION IS > 1000 GPM, THEN THE PIPE AND FITTINGS SHALL BE PER DETAIL A
18. CONTRACTOR SHALL INSTALL (N) WELD-O-LET FOR (N) PRESSURE GAUGE ON DOWNSTREAM SIDE OF FLOW METER. (SEE SHEET E-27 FOR DETAILS)

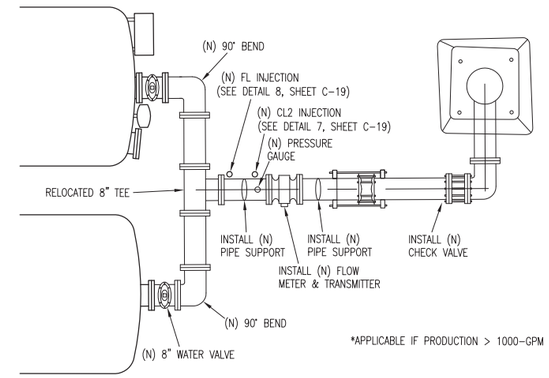

DETAIL A*

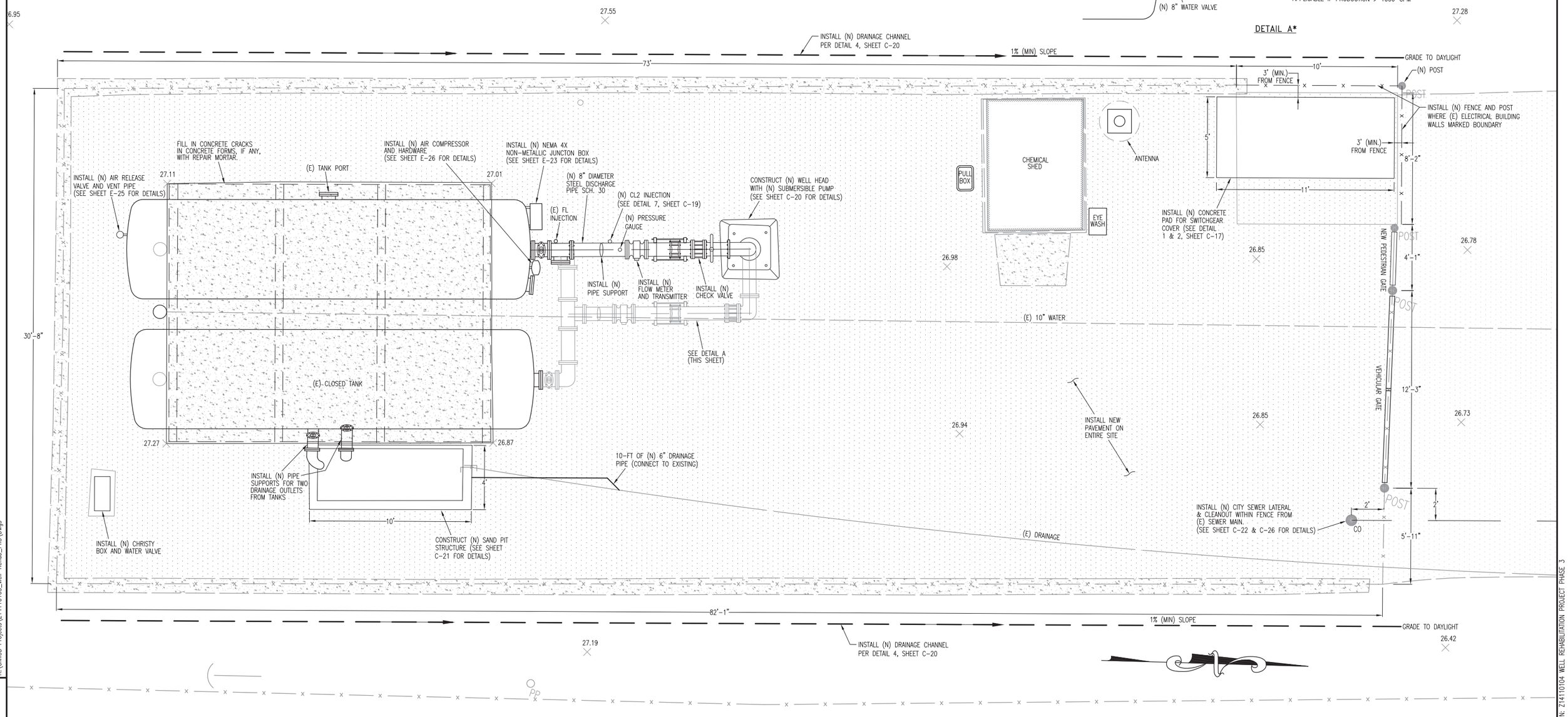

REVISIONS			
NO.	DESCRIPTION	DATE	BY

BENCH MARK ELEV. _____
DESCRIPTION:

FIELD BOOK
SCALE: H: N.A. V: N.A.

1" — ON ORIGINAL SCALE DRAWING ADJUST SCALED DIMENSIONS IF THIS DOES NOT SCALE AT 1"

CITY OF SACRAMENTO
DEPARTMENT OF UTILITIES

DRAWN BY: A. VELAZQUEZ DATE: SEP 2014
DESIGNED BY: M. THOMAS R.C.E. NO. C66780 DATE: SEP 2014
CHECKED BY: D. SHERRY R.C.E. NO. C63770 DATE: SEP 2014

REGISTERED PROFESSIONAL ENGINEER — ROON ELIZABETH TEPNER — No. C66780 Exp. 09/30/14 — CIVIL — STATE OF CALIFORNIA

IMPROVEMENT PLANS FOR:
WELL REHABILITATION PROJECT PHASE 3
WELL# 133 CIVIL SITE PLAN
(NEAR 4600 PELL DRIVE (APN 237-0022-036)

GIS GRID NO. GOT GIS
PN: Z14110105

DWG. NO. C-14
SHEET 42 OF 54

PN: Z14110105

WELL REHABILITATION PROJECT PHASE 3
R:\Civil3D Projects\Z14110105_Well-Rehab_Ph3\Dwgs

PN: Z14110104 WELL REHABILITATION PROJECT PHASE 3

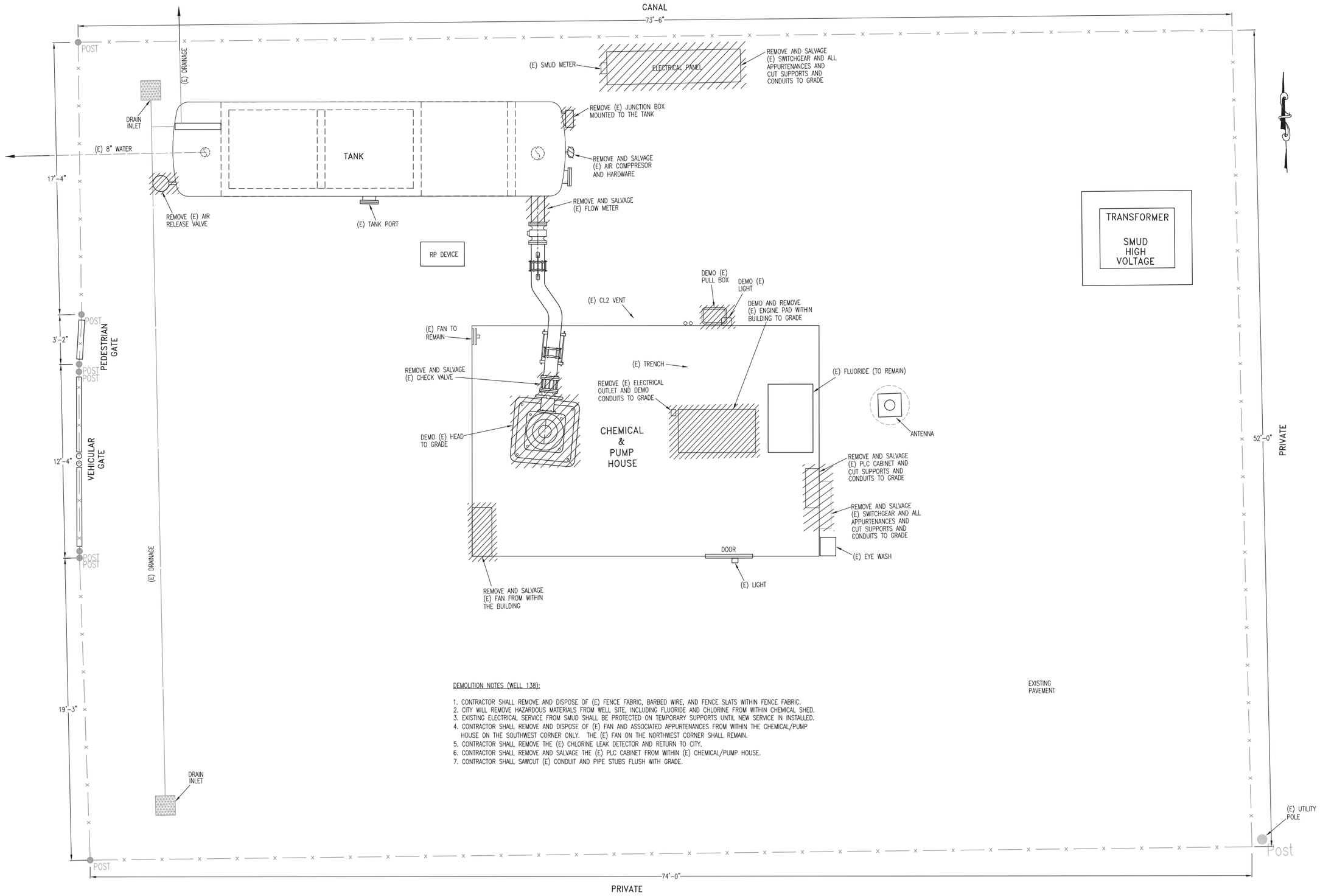

DEMOLITION NOTES (WELL 138):

1. CONTRACTOR SHALL REMOVE AND DISPOSE OF (E) FENCE FABRIC, BARBED WIRE, AND FENCE SLATS WITHIN FENCE FABRIC.
2. CITY WILL REMOVE HAZARDOUS MATERIALS FROM WELL SITE, INCLUDING FLUORIDE AND CHLORINE FROM WITHIN CHEMICAL SHED.
3. EXISTING ELECTRICAL SERVICE FROM SMUD SHALL BE PROTECTED ON TEMPORARY SUPPORTS UNTIL NEW SERVICE IN INSTALLED.
4. CONTRACTOR SHALL REMOVE AND DISPOSE OF (E) FAN AND ASSOCIATED APPURTENANCES FROM WITHIN THE CHEMICAL/PUMP HOUSE ON THE SOUTHWEST CORNER ONLY. THE (E) FAN ON THE NORTHWEST CORNER SHALL REMAIN.
5. CONTRACTOR SHALL REMOVE THE (E) CHLORINE LEAK DETECTOR AND RETURN TO CITY.
6. CONTRACTOR SHALL REMOVE AND SALVAGE THE (E) PLC CABINET FROM WITHIN (E) CHEMICAL/PUMP HOUSE.
7. CONTRACTOR SHALL SAWCUT (E) CONDUIT AND PIPE STUBS FLUSH WITH GRADE.

WELL REHABILITATION PROJECT PHASE 3
R:\Civil3D Projects\Z14110105_Well-Rehab_Ph3\Dwgs

PN: Z14110104 WELL REHABILITATION PROJECT PHASE 3

PN: Z14110105

REVISIONS			
NO.	DESCRIPTION	DATE	BY

BENCH MARK ELEV. _____
DESCRIPTION:

FIELD BOOK
SCALE:
H: N.A.
V: N.A.

1"
ON ORIGINAL SCALE DRAWING ADJUST SCALED DIMENSIONS IF THIS DOES NOT SCALE AT 1"

CITY OF SACRAMENTO
DEPARTMENT OF UTILITIES

DRAWN BY: A. VELAZQUEZ
DATE: SEP 2014
DESIGNED BY: M. THOMAS
R.C.E. NO. C66780 DATE: SEP 2014
CHECKED BY: D. SHERRY
R.C.E. NO. C63770 DATE: SEP 2014

REGISTERED PROFESSIONAL ENGINEER
MEGAN ELIZABETH THOMAS
No. C66780
Exp. 09/30/14
Civil
STATE OF CALIFORNIA

IMPROVEMENT PLANS FOR:
WELL REHABILITATION PROJECT PHASE 3
WELL# 138 DEMOLITION PLAN
4020 FELL STREET (APN 237-0311-011)

GIS GRID NO.
GOT GIS
PN: Z14110105

DWG. NO. C-15
SHEET 43 OF 54

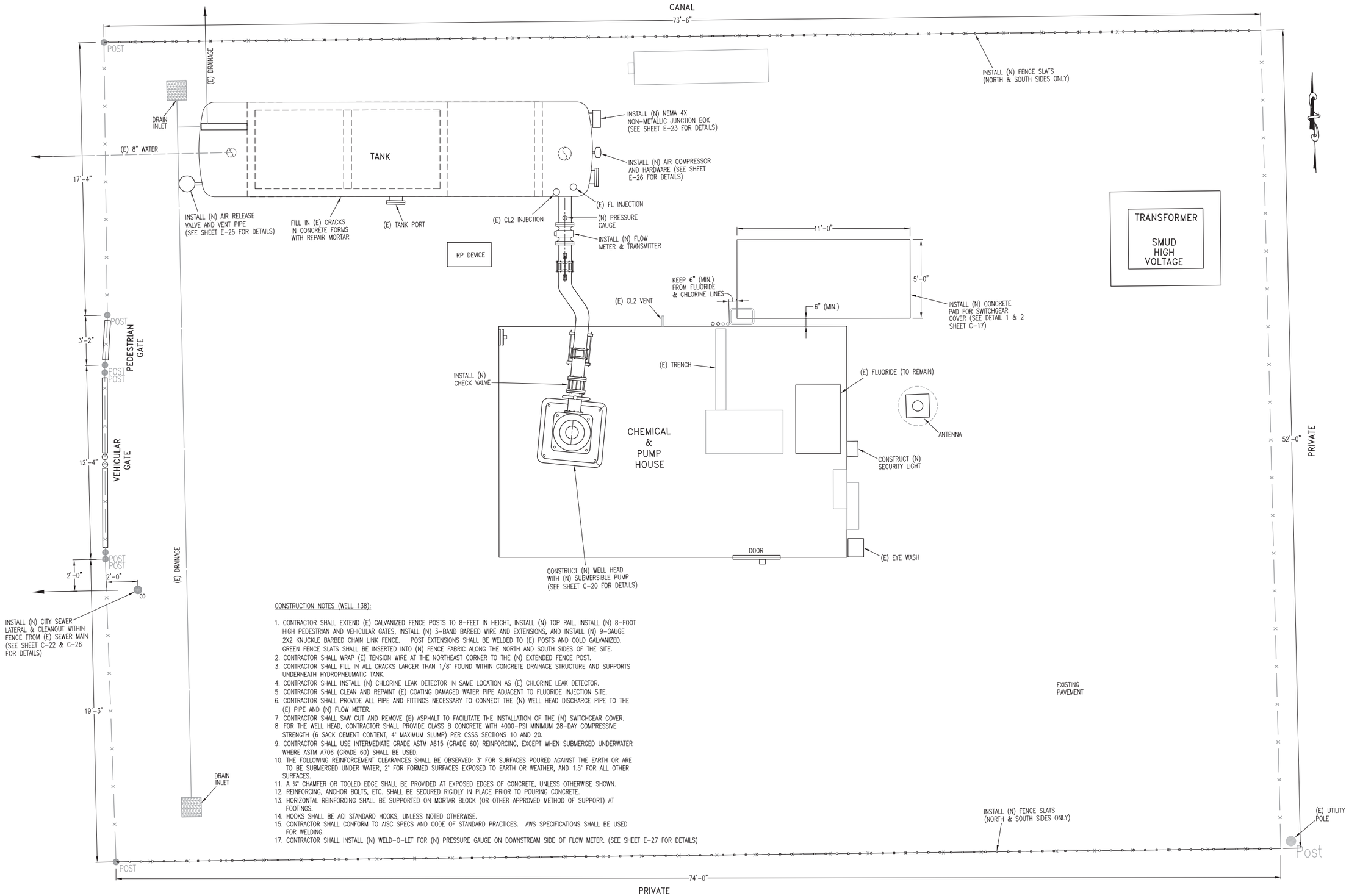

CONSTRUCTION NOTES (WELL 138):

1. CONTRACTOR SHALL EXTEND (E) GALVANIZED FENCE POSTS TO 8-FEET IN HEIGHT, INSTALL (N) TOP RAIL, INSTALL (N) 8-FOOT HIGH PEDESTRIAN AND VEHICULAR GATES, INSTALL (N) 3-BAND BARBED WIRE AND EXTENSIONS, AND INSTALL (N) 9-GAUGE 2X2 KNUCKLE BARBED CHAIN LINK FENCE. POST EXTENSIONS SHALL BE WELDED TO (E) POSTS AND COLD GALVANIZED. GREEN FENCE SLATS SHALL BE INSERTED INTO (N) FENCE FABRIC ALONG THE NORTH AND SOUTH SIDES OF THE SITE.
2. CONTRACTOR SHALL WRAP (E) TENSION WIRE AT THE NORTHEAST CORNER TO THE (N) EXTENDED FENCE POST.
3. CONTRACTOR SHALL FILL IN ALL CRACKS LARGER THAN 1/8" FOUND WITHIN CONCRETE DRAINAGE STRUCTURE AND SUPPORTS UNDERNEATH HYDROPNEUMATIC TANK.
4. CONTRACTOR SHALL INSTALL (N) CHLORINE LEAK DETECTOR IN SAME LOCATION AS (E) CHLORINE LEAK DETECTOR.
5. CONTRACTOR SHALL CLEAN AND REPAINT (E) COATING DAMAGED WATER PIPE ADJACENT TO FLUORIDE INJECTION SITE.
6. CONTRACTOR SHALL PROVIDE ALL PIPE AND FITTINGS NECESSARY TO CONNECT THE (N) WELL HEAD DISCHARGE PIPE TO THE (E) PIPE AND (N) FLOW METER.
7. CONTRACTOR SHALL SAW CUT AND REMOVE (E) ASPHALT TO FACILITATE THE INSTALLATION OF THE (N) SWITCHGEAR COVER.
8. FOR THE WELL HEAD, CONTRACTOR SHALL PROVIDE CLASS B CONCRETE WITH 4000-PSI MINIMUM 28-DAY COMPRESSIVE STRENGTH (6 SACK CEMENT CONTENT, 4" MAXIMUM SLUMP) PER CSSS SECTIONS 10 AND 20.
9. CONTRACTOR SHALL USE INTERMEDIATE GRADE ASTM A615 (GRADE 60) REINFORCING, EXCEPT WHEN SUBMERGED UNDERWATER WHERE ASTM A706 (GRADE 60) SHALL BE USED.
10. THE FOLLOWING REINFORCEMENT CLEARANCES SHALL BE OBSERVED: 3" FOR SURFACES POURED AGAINST THE EARTH OR ARE TO BE SUBMERGED UNDER WATER, 2" FOR FORMED SURFACES EXPOSED TO EARTH OR WEATHER, AND 1.5" FOR ALL OTHER SURFACES.
11. A ¾" CHAMFER OR TOOLED EDGE SHALL BE PROVIDED AT EXPOSED EDGES OF CONCRETE, UNLESS OTHERWISE SHOWN.
12. REINFORCING, ANCHOR BOLTS, ETC. SHALL BE SECURED RIGIDLY IN PLACE PRIOR TO POURING CONCRETE.
13. HORIZONTAL REINFORCING SHALL BE SUPPORTED ON MORTAR BLOCK (OR OTHER APPROVED METHOD OF SUPPORT) AT FOOTINGS.
14. HOOKS SHALL BE ACI STANDARD HOOKS, UNLESS NOTED OTHERWISE.
15. CONTRACTOR SHALL CONFORM TO AISC SPECS AND CODE OF STANDARD PRACTICES. AWS SPECIFICATIONS SHALL BE USED FOR WELDING.
17. CONTRACTOR SHALL INSTALL (N) WELD-O-LET FOR (N) PRESSURE GAUGE ON DOWNSTREAM SIDE OF FLOW METER. (SEE SHEET E-27 FOR DETAILS)

WELL REHABILITATION PROJECT PHASE 3
R:\Civil3D Projects\Z14110105_Well-Rehab_Ph3\Dwgs

PN: Z14110104 WELL REHABILITATION PROJECT PHASE 3

PN: Z14110105

REVISIONS			
NO.	DESCRIPTION	DATE	BY

BENCH MARK ELEV. _____
DESCRIPTION:

FIELD BOOK
SCALE:
H: N.A.
V: N.A.

1"
ON ORIGINAL SCALE DRAWING ADJUST SCALED DIMENSIONS IF THIS DOES NOT SCALE AT 1"

CITY OF SACRAMENTO
DEPARTMENT OF UTILITIES

DRAWN BY: A. VELAZQUEZ
DATE: SEP 2014
DESIGNED BY: M. THOMAS
R.C.E. NO. C66780 DATE: SEP 2014
CHECKED BY: D. SHERRY
R.C.E. NO. C63770 DATE: SEP 2014

REGISTERED PROFESSIONAL ENGINEER
MEGAN ELIZABETH THOMAS
No. C66780
Exp. 09/30/14
CIVIL
STATE OF CALIFORNIA

IMPROVEMENT PLANS FOR:
WELL REHABILITATION PROJECT PHASE 3
WELL# 138 CIVIL SITE PLAN
4020 FELL STREET (APN 237-0311-011)

GIS GRID NO.
GOT GIS

PN: Z14110105

DWG. NO. C-16
SHEET 44 OF 54

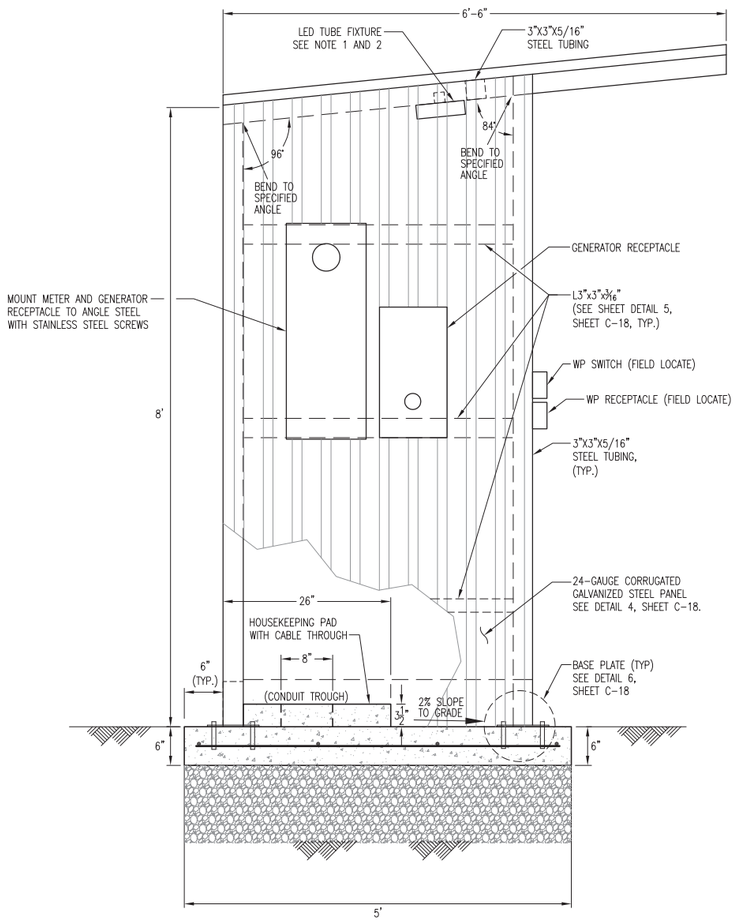

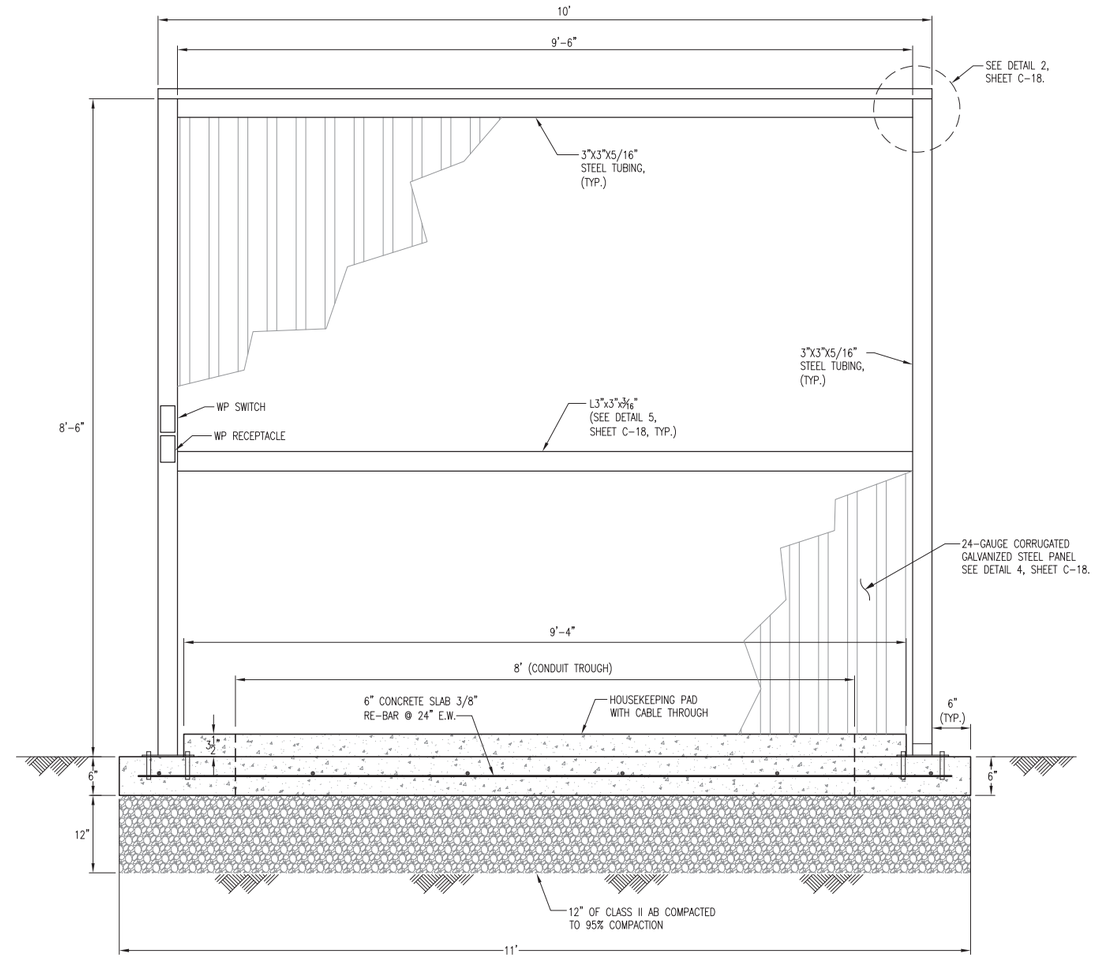

NOTES:

1. MOUNT A 10' PIECE OF 1-5/8" X 1-5/8" SLOTTED GALVANIZED STEEL UNISTRUT ABOVE AND IN FRONT OF SWITCHGEAR, BETWEEN STEEL TUBING. USE A 1-3/4" X 1-3/4" "L" BRACKET AT EACH END OF UNISTRUT TO MOUNT TO STEEL TUBING.
2. MOUNT LIGHT FIXTURE TO UNISTRUT USING CHANNEL NUTS.
3. CONTRACTOR TO INSTALL LED LIGHTING FIXTURE, RECEPTACLE, AND OUTDOOR SWITCH FOR THE SWITCHGEAR COVER LIGHTS.
4. SEE SHEETS C-18 AND C-19 FOR ADDITIONAL DETAILS.

NOTES:

1. ALL SIDE PANELS SHALL BE POWDER COATED. COLOR TO BE SELECTED BY THE ENGINEER.
2. ALL STEEL SHALL BE HOT DIPPED GALVANIZED.
3. ATTACH CORRUGATED PANELS PER MANUFACTURERS RECOMMENDATION.
4. ALL MOUNTING HARDWARE SHALL BE STAINLESS STEEL.
5. CONTRACTOR SHALL REMOVE EXISTING CONCRETE OR PAVEMENT TO FACILITATE INSTALLATION OF FOUNDATIONS.
6. SEE ELECTRICAL SITE PLANS FOR EXACT LOCATION OF WP SWITCH AND RECEPTACLE.

1 / C-17 **SIDE ELEVATION**

SCALE: 1"=1'-0"

2 / C-17 **FRONT ELEVATION**

SCALE: 1"=1'-0"

WELL REHABILITATION PROJECT PHASE 3
R:\Civil3D Projects\Z14110105_Well-Rehab_Ph3\Dwgs

PN: Z14110105

REVISIONS			
NO.	DESCRIPTION	DATE	BY

BENCH MARK ELEV. _____
DESCRIPTION:

FIELD BOOK

SCALE:
H: N.A.
V: N.A.

1"
ON ORIGINAL SCALE DRAWING ADJUST SCALED DIMENSIONS IF THIS DOES NOT SCALE AT 1"

CITY OF SACRAMENTO
DEPARTMENT OF UTILITIES

DRAWN BY: A. VELAZQUEZ
DATE: SEP 2014
DESIGNED BY: M. THOMAS
R.C.E. NO. C66780 DATE: SEP 2014
CHECKED BY: D. SHERRY
R.C.E. NO. C63770 DATE: SEP 2014

REGISTERED PROFESSIONAL ENGINEER
REGINA ELIZABETH THOMAS
No. C66780
Exp. 09/30/14
CIVIL
STATE OF CALIFORNIA

IMPROVEMENT PLANS FOR:
WELL REHABILITATION PROJECT PHASE 3

SWITCHGEAR COVER

GIS GRID NO.
GOT GRID NO.

PN: Z14110105

DWG. NO. C-17
SHEET 43 OF 54

PN: Z14110104 WELL REHABILITATION PROJECT PHASE 3

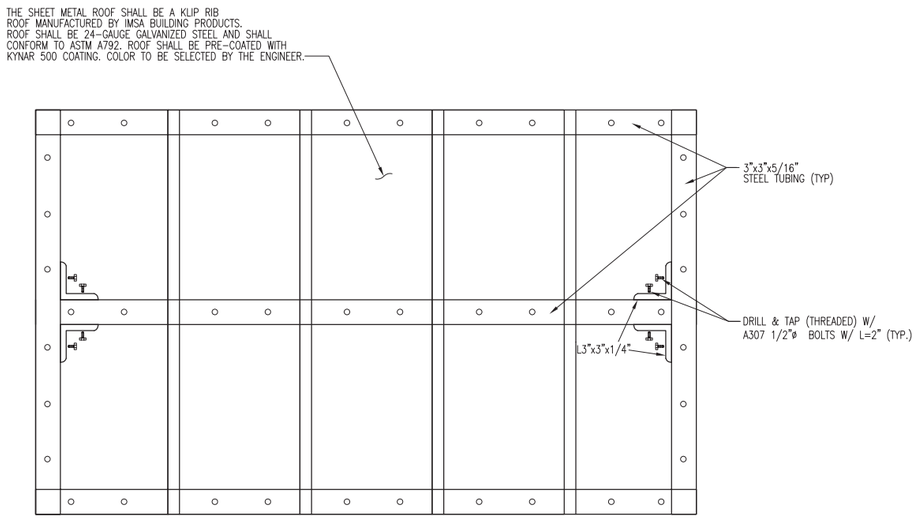

1. CONTRACTOR SHALL INSTALL ROOF PER MANUFACTURERS RECOMMENDATION.

1 / C-18 **ROOF TOP VIEW** N.T.S.

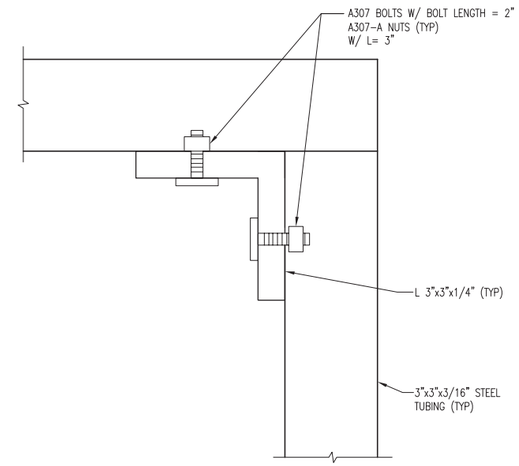

2 / C-18 **ROOF CONNECTION** N.T.S.

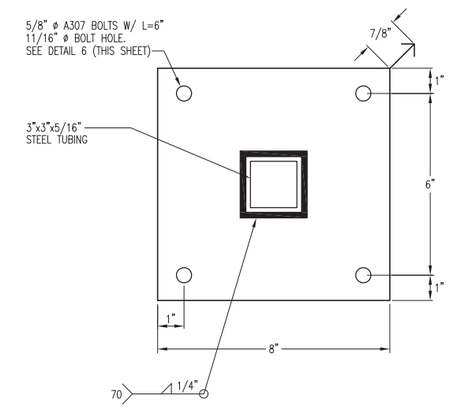

3 / C-18 **BASE PLATE** (8"x8"x7/8") N.T.S.

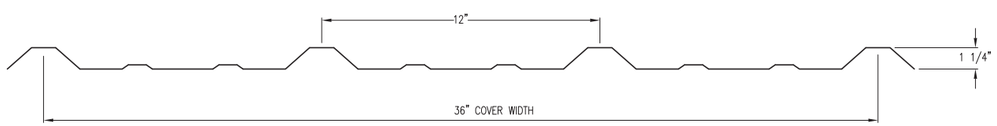

CORRUGATED GALVANIZED STEEL SIDE PANEL

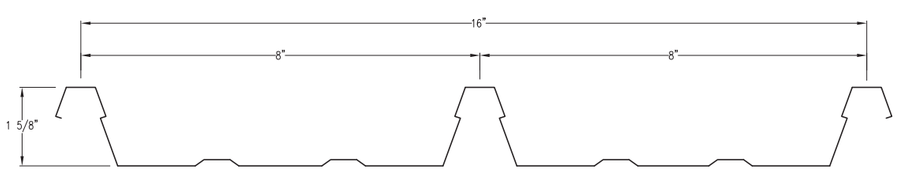

KLIP-RIB ROOF

4 / C-18 **SIDE ELEVATION** N.T.S.

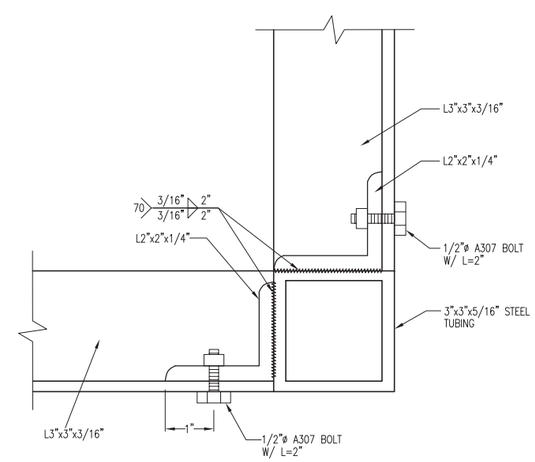

5 / C-18 **BOTTOM, MID BEAM-COLUMN CONNECTION** N.T.S.

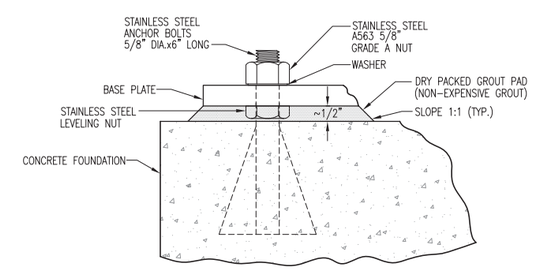

6 / C-18 **BASE PLATE CONNECTION** N.T.S.

WELL REHABILITATION PROJECT PHASE 3
R:\Civil3D Projects\Z14110105_Well-Rehab_Ph3\Dwgs

PN: Z14110104 WELL REHABILITATION PROJECT PHASE 3

PN: Z14110105

REVISIONS			
NO.	DESCRIPTION	DATE	BY

BENCH MARK ELEV. _____
DESCRIPTION:

FIELD BOOK
SCALE: H: N.A. V: N.A.

1" — ON ORIGINAL SCALE DRAWING ADJUST SCALED DIMENSIONS IF THIS DOES NOT SCALE AT 1"

CITY OF SACRAMENTO
DEPARTMENT OF UTILITIES

DRAWN BY: A. VELAZQUEZ DATE: SEP 2014
DESIGNED BY: M. THOMAS R.C.E. NO. C66780 DATE: SEP 2014
CHECKED BY: D. SHERRY R.C.E. NO. C63770 DATE: SEP 2014

REGISTERED PROFESSIONAL ENGINEER REGAN ELIZABETH TERPA No. C66780 Exp. 09/30/14 CIVIL STATE OF CALIFORNIA

IMPROVEMENT PLANS FOR:
WELL REHABILITATION PROJECT PHASE 3

SWITCHGEAR COVER DETAILS

GIS GRID NO. GOT GRID NO.
PN: Z14110105
DWG. NO. C-18
SHEET 46 OF 54

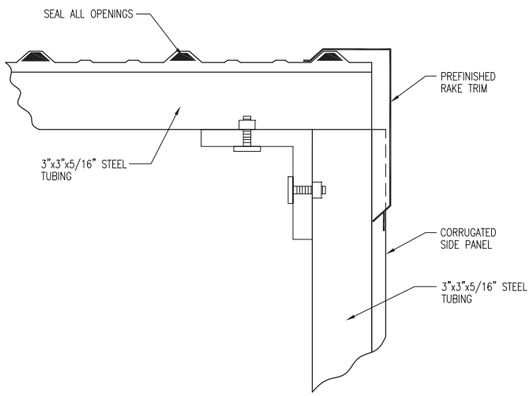

1 C-19 **SWITCHGEAR COVER RAKE** N.T.S.

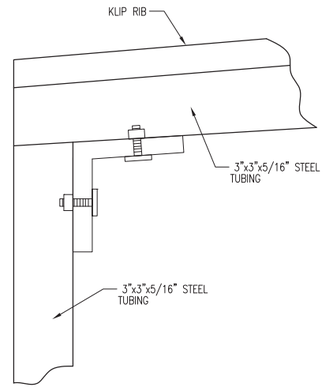

2 C-19 **SWITCHGEAR COVER EAVE** N.T.S.

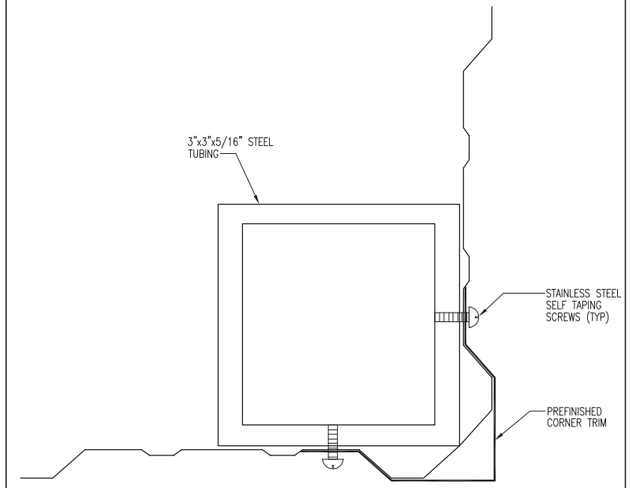

3 C-19 **SWITCHGEAR COVER REAR CORNER** N.T.S.

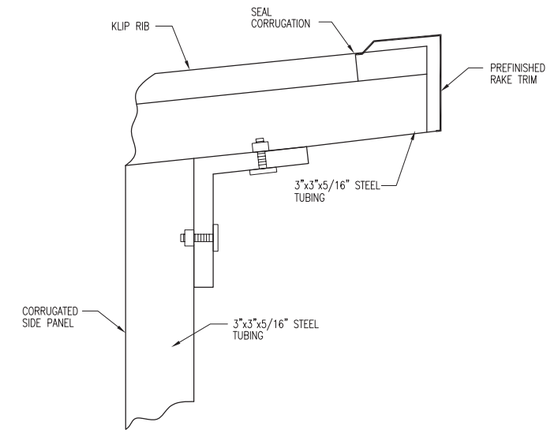

4 C-19 **SWITCHGEAR COVER HIGH EAVE** N.T.S.

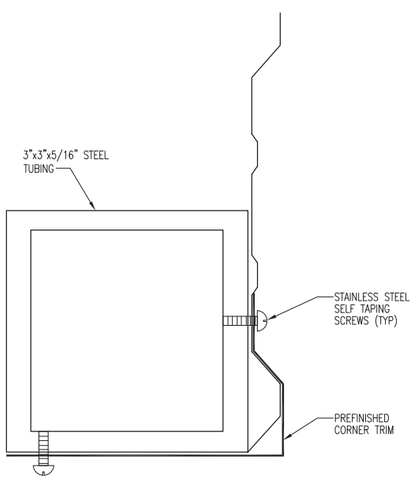

5 C-19 **SWITCHGEAR COVER FRONT CORNER** N.T.S.

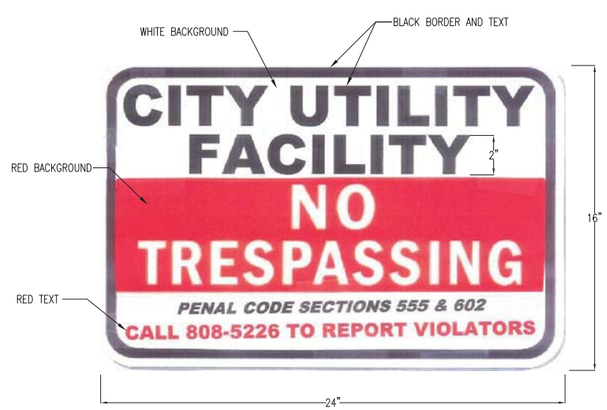

6 C-19 **TRESPASSING SIGN** N.T.S.

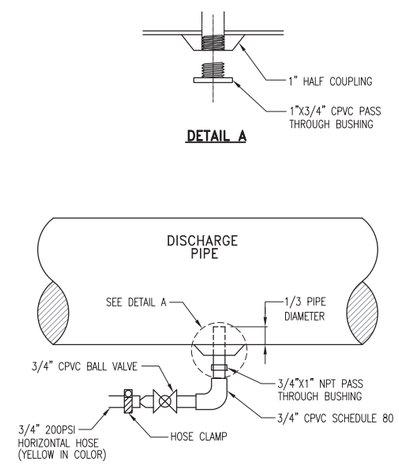

NOTES:

1. CONTRACTOR SHALL REMOVE THE EXISTING CL2 HOSE AND INSTALL (N) 3/4" 200 PSI HORIZON HOSE FROM THE PIPE TO THE CL2 BOOSTER PUMP.
2. WHERE INDICATED, CONTRACTOR SHALL INSTALL (N) TAP FOR CHLORINE ON THE WATER MAIN. CHLORINE SHALL BE CONNECTED UPSTREAM OF FL INJECTION, AND DOWNSTREAM OF METER AND CHECK VALVE.

7 C-19 **CHLORINE INJECTION** N.T.S.

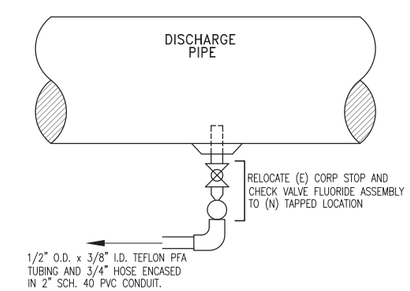

NOTES:

1. WHERE INDICATED, CONTRACTOR SHALL INSTALL (N) TAP FOR FLUORIDE ON THE WATER MAIN. FLUORIDE SHALL BE CONNECTED DOWNSTREAM OF CL2, INJECTION, METER, CHECK VALVE AND UPSTREAM OF GATE VALVE ISOLATION TO TANK.

8 C-19 **FLUORIDE INJECTION** N.T.S.

WELL REHABILITATION PROJECT PHASE 3
R:\Civil3D Projects\Z14110105_Well-Rehab_Ph3\Dwgs

PN: Z14110104 WELL REHABILITATION PROJECT PHASE 3

PN: Z14110105

REVISIONS			
NO.	DESCRIPTION	DATE	BY

BENCH MARK ELEV. _____
DESCRIPTION:

FIELD BOOK

SCALE: H: N.A. V: N.A.

1" — ON ORIGINAL SCALE DRAWING ADJUST SCALED DIMENSIONS IF THIS DOES NOT SCALE AT 1"

CITY OF SACRAMENTO
DEPARTMENT OF UTILITIES

DRAWN BY: A. VELAZQUEZ DATE: SEP 2014
DESIGNED BY: M. THOMAS R.C.E. NO. C66780 DATE: SEP 2014
CHECKED BY: D. SHERRY R.C.E. NO. C63770 DATE: SEP 2014

REGISTERED PROFESSIONAL ENGINEER — REGAN ELIZABETH TERRY — No. C66780 Exp. 09/30/14 — CIVIL — STATE OF CALIFORNIA

IMPROVEMENT PLANS FOR:
WELL REHABILITATION PROJECT PHASE 3
SWITCHGEAR COVER, SIGNAGE, AND CHEMICAL FEED DETAILS

GIS GRID NO. GOT GRID NO.
PN: Z14110105

DWG. NO. C-19
SHEET 47 OF 54

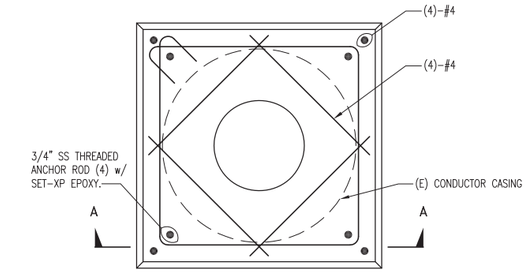

PLAN VIEW

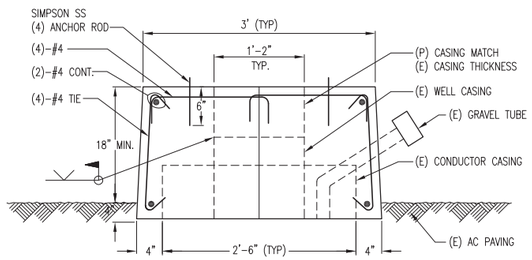

SECTION A-A

NOTES:
1. PROVIDE CLASS B CONCRETE AND INTERMEDIATE GRADE ASTM A615 GRADE 60 REINFORCING STEEL
2. EXTEND (E) GRAVEL TUBE AS NECESSARY.

1 / C-20 **WELLHEAD DETAIL**

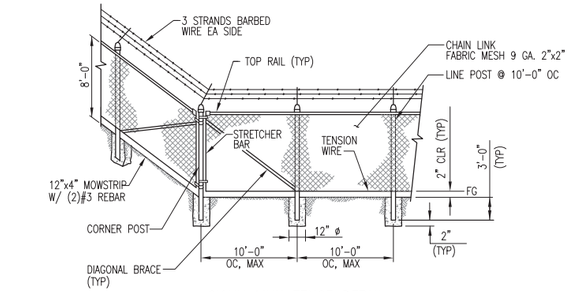

CHAIN LINK FENCE DETAIL

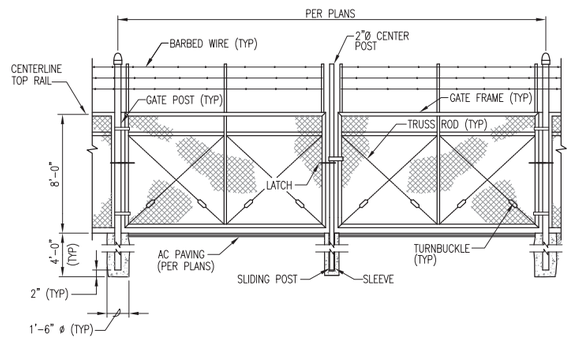

2 / C-20 **CHAIN LINK SWING GATE DETAILS**

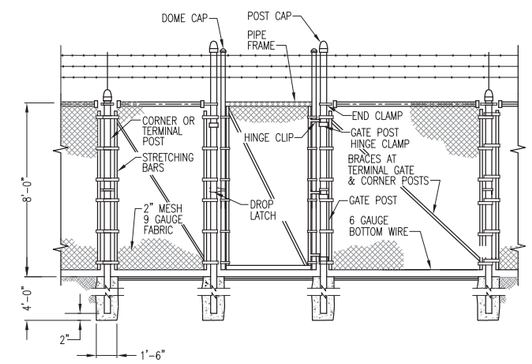

NOTES:
1. CONTRACTOR SHALL INSTALL 8' GALVANIZED FENCE POSTS OVER (E) I-BEAM FENCE POSTS AT WELLS 107 AND 133. SECURE ROUND POSTS TO I-BEAMS POSTS WITH 3/8" DIAMETER GALVANIZED SCREWS, OR PLUG WELD.

3 / C-20 **PEDESTRIAN GATE**

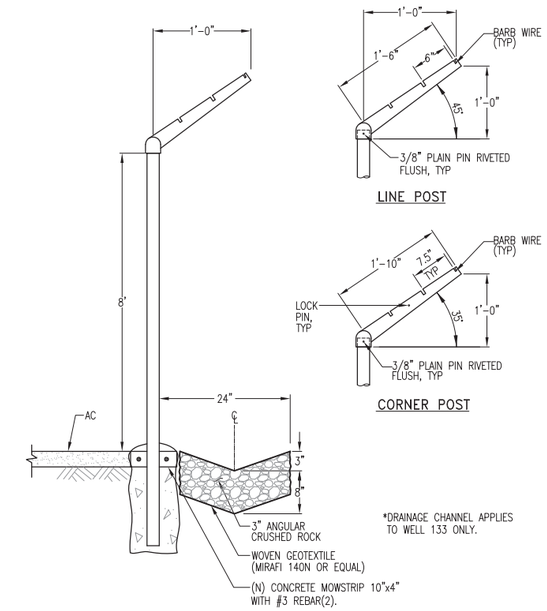

*DRAINAGE CHANNEL APPLIES TO WELL 133 ONLY.

4 / C-20 **CHAIN LINK FENCE w/ DRAINAGE CHANNEL**

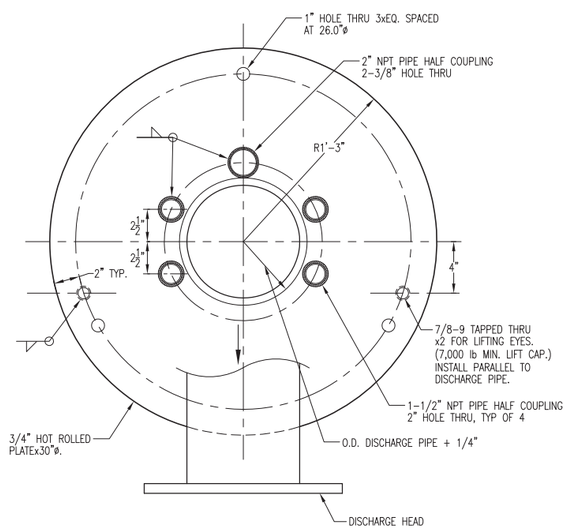

5 / C-20 **WELLHEAD DISCHARGE PIPING (PLAN)**

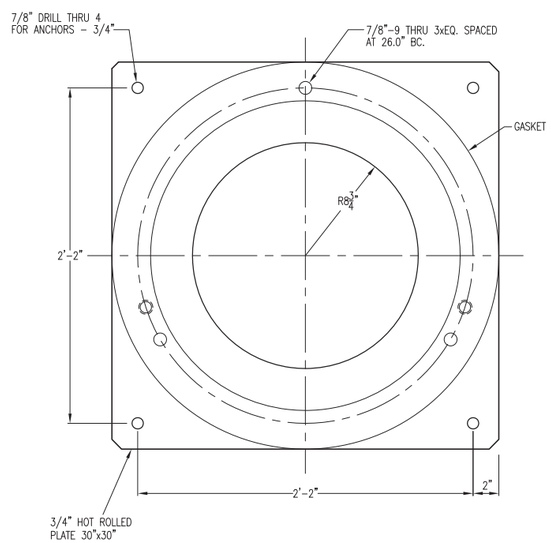

NOTES:
SEAL BASEPLATE TO WELLHEAD w/SILICON GASKET MATERIAL.

6 / C-20 **WELLHEAD BASEPLATE**

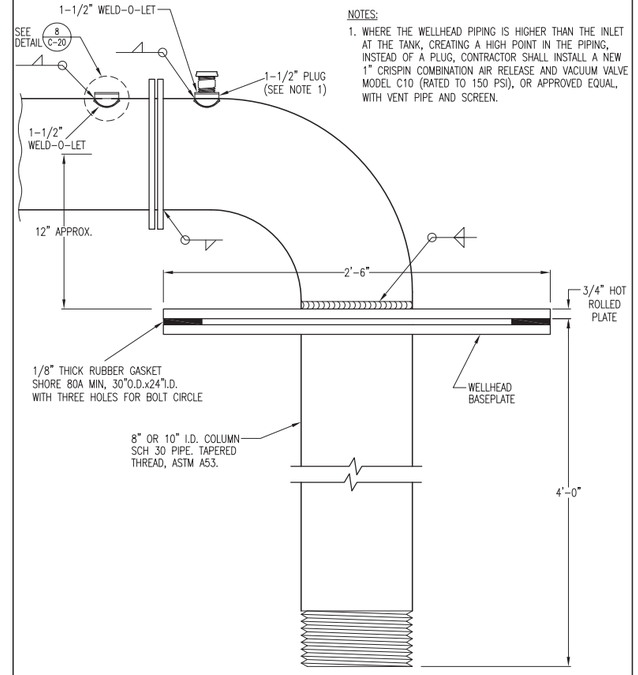

NOTES:
1. WHERE THE WELLHEAD PIPING IS HIGHER THAN THE INLET AT THE TANK, CREATING A HIGH POINT IN THE PIPING, INSTEAD OF A PLUG, CONTRACTOR SHALL INSTALL A NEW 1" CRISPIN COMBINATION AIR RELEASE AND VACUUM VALVE MODEL C10 (RATED TO 150 PSI), OR APPROVED EQUAL, WITH VENT PIPE AND SCREEN.

7 / C-20 **WELLHEAD DISCHARGE PIPING (PROFILE)**

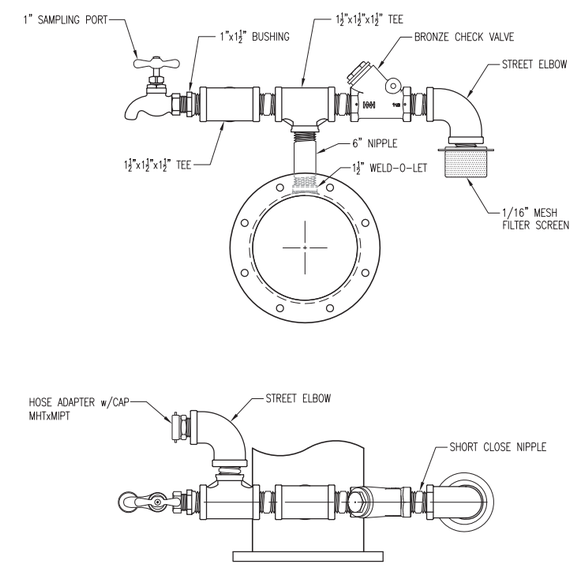

8 / C-20 **SAMPLE PORT & AIR RELEASE ASSEMBLY**

WELL REHABILITATION PROJECT PHASE 3
R:\Civil3D Projects\Z14110105_Well-Rehab_Ph3\Dwgs

PN: Z14110105

REVISIONS			
NO.	DESCRIPTION	DATE	BY

BENCH MARK ELEV. _____
DESCRIPTION:

FIELD BOOK
SCALE: H: N.A. V: N.A.

1" — ON ORIGINAL SCALE DRAWING ADJUST SCALED DIMENSIONS IF THIS DOES NOT SCALE AT 1"

CITY OF SACRAMENTO
DEPARTMENT OF UTILITIES

DRAWN BY: A. VELAZQUEZ DATE: SEP 2014
DESIGNED BY: M. THOMAS R.C.E. NO. C66780 DATE: SEP 2014
CHECKED BY: D. SHERRY R.C.E. NO. C63770 DATE: SEP 2014

REGISTERED PROFESSIONAL ENGINEER REGAN ELIZABETH HONDA No. C66780 Exp. 09/30/14 CIVIL STATE OF CALIFORNIA

IMPROVEMENT PLANS FOR:
WELL REHABILITATION PROJECT PHASE 3

WELLHEAD & FENCE DETAILS

GIS GRID NO. GOT GIS
PN: Z14110105
DWG. NO. C-20
SHEET 48 OF 54

PN: Z14110104 WELL REHABILITATION PROJECT PHASE 3

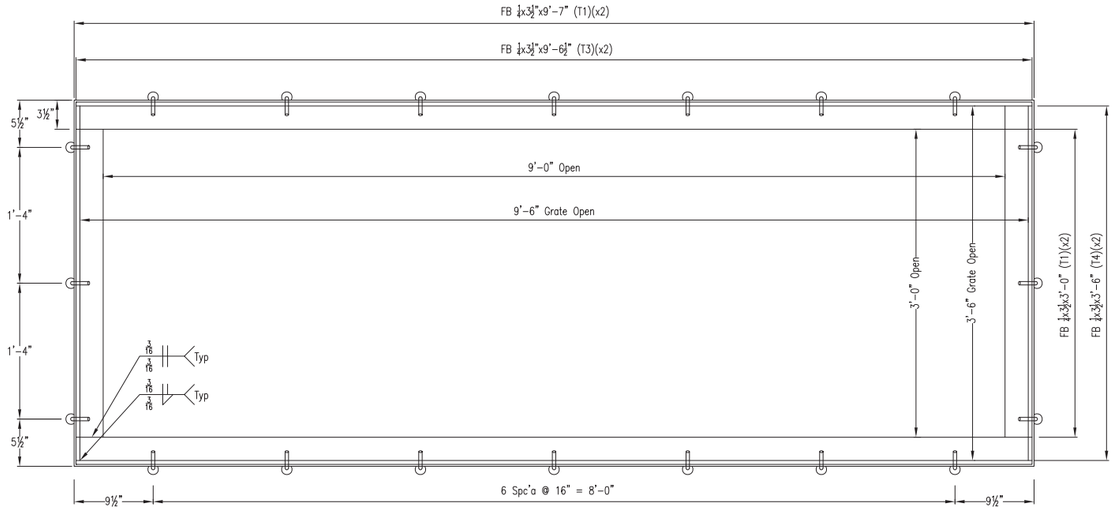

1ea ~Frame & Grate Assembly ~ #A1
(36"x9'-0")

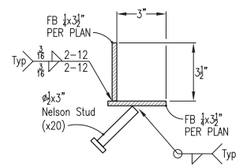

Typical Section

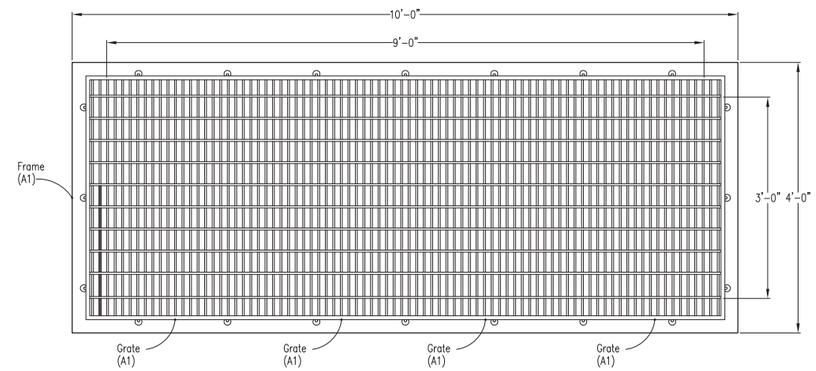

1ea ~Frame & Grate Assembly ~ #E1
(36"x9'-0")

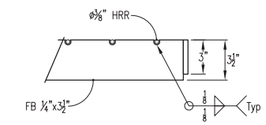

View A

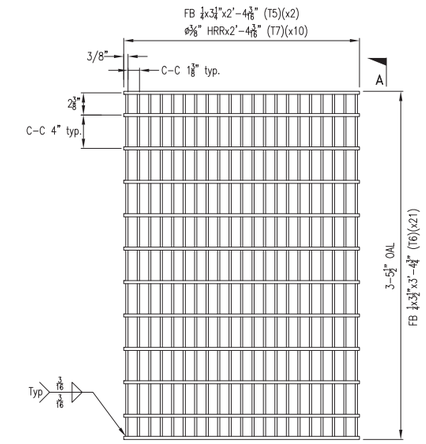

4ea ~ Grate Assembly ~ #A2
(28 3/16"x3'-5¼")

OTHER SAND PIT DETAILS

1
C-21

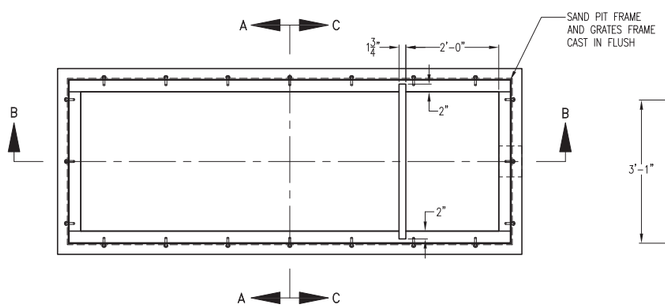

PLAN VIEW

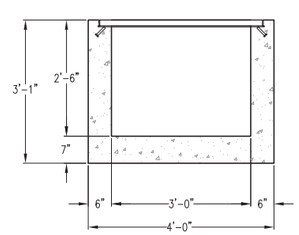

VIEW A–A

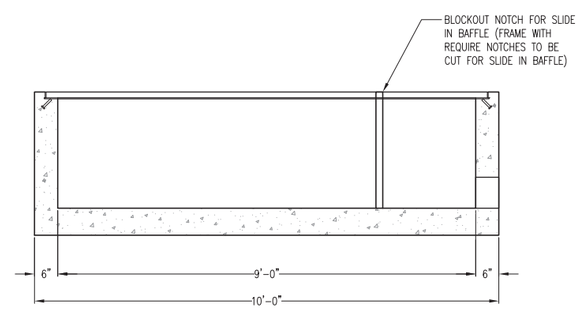

VIEW B–B

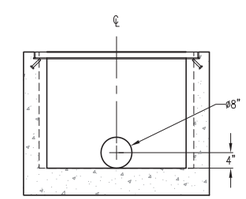

VIEW C–C

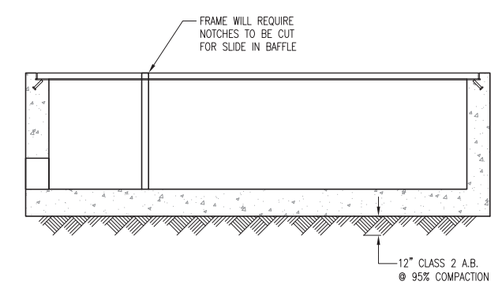

VIEW D–D

NOTES:

1. SAND PIT AND GRATE ASSEMBLY SHALL BE JENSEN PRECAST SAND PIT (DETAIL 1406-6669-5) OR APPROVED EQUAL.
2. STEEL GRATING SHALL BE GALVANIZED (HOT-DIP), WITH BEARING BAR PITCH OF 30 mm AND CROSS BAR PITCH OF 100 mm. ALL FASTENERS AND STUDS SHALL BE 304 SS.
3. CONTRACTOR SHALL DRY PACK GROUT TO SEAL CONNECTION BETWEEN SAND PIT AND DRAINAGE PIPE. DRAINAGE PIPE SHALL BE INSTALLED SUCH THAT INVERT OF PIPE MATCHES FLOOR OF SAND PIT.
4. CONTRACTOR SHALL INSTALL 3-2x6 REDWOOD BOARDS FOR SLIDE-IN BAFFLE.
5. CONTRACTOR SHALL MAINTAIN A MINIMUM 1% SLOPE IN DRAINAGE PIPE WHEN TYING INTO (E) STORM DRAIN LATERAL TO ENSURE POSITIVE DRAINAGE AWAY FROM THE (N) SAND PIT, WHICH MAY REQUIRE ADDITIONAL LENGTH OF STORM DRAIN TO BE REPLACED THAN WHAT IS SHOWN ON THE ASSOCIATED SITE PLANS.

WELL REHABILITATION PROJECT PHASE 3
R:\Civil3D Projects\Z14110105_Well-Rehab_Ph3\Dwgs

PN: Z14110104 WELL REHABILITATION PROJECT PHASE 3

PN: Z14110105

REVISIONS			
NO.	DESCRIPTION	DATE	BY

BENCH MARK ELEV. _____
DESCRIPTION:

FIELD BOOK
SCALE:
H: N.A.
V: N.A.

1"
ON ORIGINAL SCALE DRAWING ADJUST SCALED DIMENSIONS IF THIS DOES NOT SCALE AT 1"

CITY OF SACRAMENTO
DEPARTMENT OF UTILITIES

DRAWN BY: A. VELAZQUEZ
DATE: SEP 2014
DESIGNED BY: M. THOMAS
R.C.E. NO. C66780 DATE: SEP 2014
CHECKED BY: D. SHERRY
R.C.E. NO. C63770 DATE: SEP 2014

REGISTERED PROFESSIONAL ENGINEER
ALAN ELIZABETH THOMAS
No. C66780
Exp. 09/30/14
CIVIL
STATE OF CALIFORNIA

IMPROVEMENT PLANS FOR:
WELL REHABILITATION PROJECT PHASE 3

SAND PIT

GIS GRID NO.
GOT GO

PN: Z14110105

DWG. NO. C-21
SHEET 49 OF 54

NOTES

1. USE STANDARD MANHOLE 3A WHEN GREATER THAN 8 FEET DEEP, FOR SANITARY SEWER PIPES LESS THAN 21" DIA. AND FOR STORM DRAIN PIPE LESS THAN 27" DIA.
2. MANHOLES SHALL CONFORM TO SEC. 25 OF THE CITY STANDARD SPECIFICATIONS.
3. FLOWLINE MATERIAL FOR SEWER MAINS AND INTERSECTING MAINS SHALL BE VITRIFIED CLAY EXCEPT: IF MANHOLE BASE IS PRECAST CONCRETE, OR MANHOLE BASE IS PLACED OVER MAIN WHICH IS "LAID THROUGH", IN WHICH CASE FLOWLINE MATERIAL SHALL BE SAME AS MAIN.
4. FLOWLINE MATERIAL FOR STORM DRAIN PIPE SHALL BE THE SAME AS MAIN LINE PIPE WHEN "LAID THROUGH", OR GROUTED TO THE SPRINGLINE MATCHING THE EXITING PIPE DIAMETER.
5. MANHOLE BENCH SHALL SLOPE UPWARDS FROM THE SPRING-LINE OF THE PIPE TO THE PROJECTED LEVEL OF THE CROWN OF THE PIPE AT THE MANHOLE WALL OR 12 INCHES ABOVE THE SPRING-LINE, WHICHEVER IS LESS.
6. CORE OPENING AND USE "KOR-N-SEAL" OR APPROVED EQUAL FLEXIBLE COUPLINGS ON ALL CONNECTIONS TO MANHOLE EXCEPT IF PIPE IS "LAID THROUGH" AND CAST INTO BASE. IF PIPE IS "LAID THROUGH", CONTRACTOR SHALL PROVIDE WATER STOP WHERE PIPE IS CAST INTO BASE.
7. IF MANHOLE IS PLACED IN NON-PAVED AREA, SEE S-70

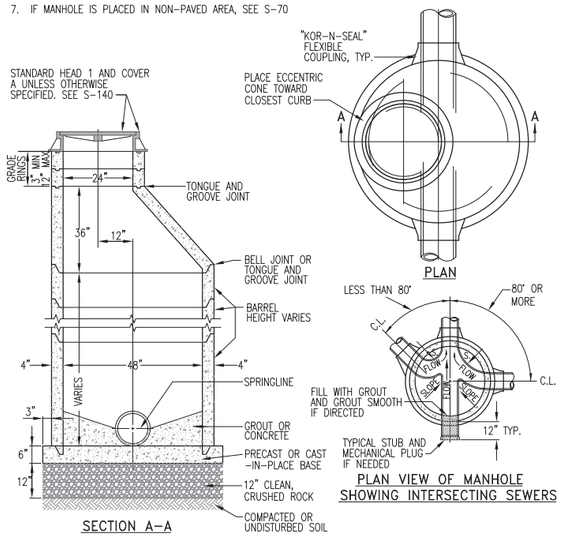

STANDARD MANHOLE #3A S-80

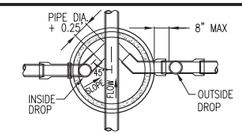

PLAN

INSIDE & OUTSIDE DROP MANHOLE

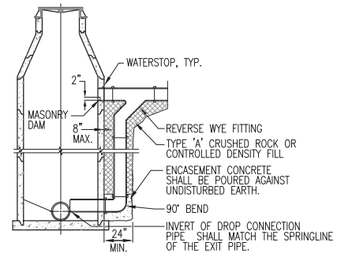

OUTSIDE DROP CONNECTION

FOR 10" AND LARGER DROP OR WHERE SPECIFICALLY INDICATED ON THE DRAWINGS

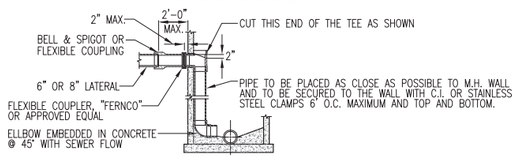

INSIDE DROP CONNECTION

NOTES:

1. ALL INSIDE AND OUTSIDE DROP PIPING TO BE P.V.C. IN CONFORMANCE WITH ASTM D3034 (SDR 35).
2. ALL JOINTS SHALL BE SOLVENT WELDED.
3. DROP CONNECTION PIPE AND FITTINGS TO BE SAME SIZE AS LATERAL.
4. INSIDE DROP CONNECTIONS SHALL BE CORE-BORED. PROVIDE WATER-TIGHT CONNECTIONS WITH NON-SHRINK EPOXY GROUT AS DIRECTED BY ENGINEER.
5. PIPE JOINTS SHALL BE BELL & SPIGOT OR FLEXIBLE COUPLERS SUCH AS "FERNCO" OR APPROVED EQUAL.

INSIDE/OUTSIDE DROP CONNECTION FOR MAIN LINES ≥ 8" S-130

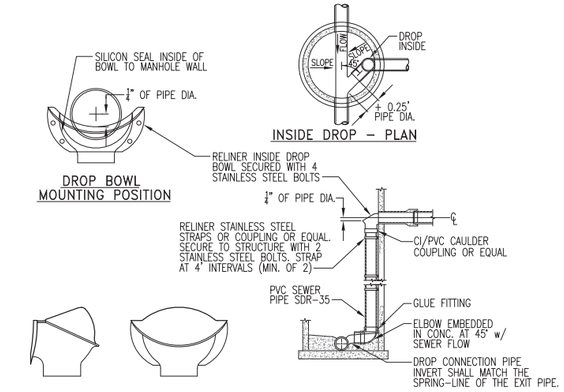

NOTES:

1. ALL INSIDE DROP CONNECTIONS FOR SERVICES AND COLLECTOR SEWERS SHALL USE THE DROP BOWL AS PRODUCED BY: RELINER-DURAN, INC. 53 MT. ARCHER RD. LIME, CT 06371 (860)434-0277 FAX: (860)434-3195 OR EQUAL.
2. DROP BOWL MODEL "A-4" SHALL BE USED FOR ALL LINES UP THROUGH FULL 6" INLETS. DROP BOWL MODEL "A-6" SHALL BE USED FOR ALL 8" INLETS. DROP BOWLS MODEL "B-8" SHALL BE USED FOR ALL 10" INLETS. LINES LARGER THAN 10 SHALL BE AS DIRECTED BY THE DIRECTOR.
3. THE FORCE LINE HOOD SHALL BE ATTACHED ON MODELS "A-4" & "A-6" WHEN THE INCOMING LINE IS FROM A FORCE MAIN OR THE SLOPE IS S=0.03 OR GREATER.
4. SECURE DROP PIPE TO MANHOLE WALL WITH RELINER-DURAN, INC STAINLESS STEEL ADJUSTABLE CLAMPING BRACKETS OR EQUAL
5. ATTACH THE DROP BOWL & EACH CLAMPING BRACKET TO THE MANHOLE WALL WITH 3/8"x3 3/4" RAMSET/RED HEAD BOLTS HELD INPLACE WITH 2 STAGE EPOXY PASTE. EPOXY SHALL MEET THE FOLLOWING REQUIREMENTS:
   A. EPOXY PASTE SHALL BE A TWO COMPONENT, 100% SOLID SYSTEM. EPOXY SHALL BE SIKADUR 31 HI-MOD GEL BY SIKA CORPORATION (PHONE (592)941-0231) OR EQUAL.
   B. THE EPOXY SHALL DEVELOP A MINIMUM COMPRESSIVE STRENGTH OF 5,000 PSI IN 28 DAYS WHEN TESTED IN ACCORDANCE WITH ASTM D695 AT 73 DEGREES.
   C. THE EPOXY PASTE SHALL DEVELOP A MINIMUM TENSILE STRENGTH OF 3,000 PSI IN 14 DAYS WHEN TESTED IN ACCORDANCE WITH ASTM D638.
   D. THE EPOXY PASTE SHALL DEVELOP A MINIMUM BOND STRENGTH OF 2,000 PSI IN 2 DAYS WHEN TESTED IN ACCORDANCE WITH ASTM C882. (HARDENED CONCRETE TO HARDENED CONCRETE)
   E. MANUFACTURER'S INSTRUCTIONS SHALL BE PRINTED ON EACH CONTAINER IN WHICH THE MATERIALS ARE PACKAGED.

INSIDE DROP CONNECTION FOR MAIN LINES & SERVICES ≤ 6" S-135

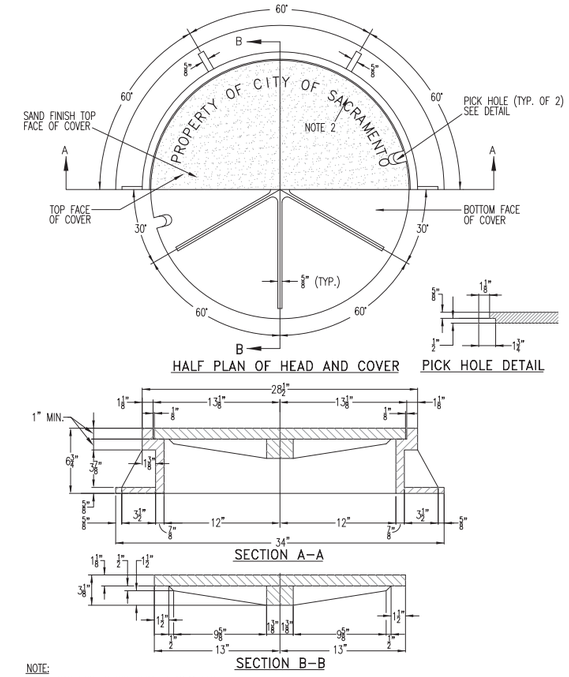

NOTE:

1. ALL CASTINGS TO CONFORM TO ASTM A48, CLASS 30, AND BE H-20 TRAFFIC RATED.
2. 1" TALL LETTERS RAISED 1/4" CAST INTO COVER.

STANDAR MANHOLE HEAD 1, COVER A S-140

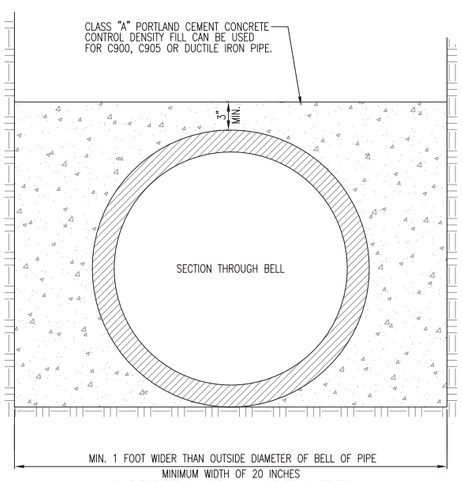

NOTE:
EXACT COVER REQUIREMENT TO BE DETERMINED BY ENGINEER.

CONCRETE PROTECTING COVERING S-250

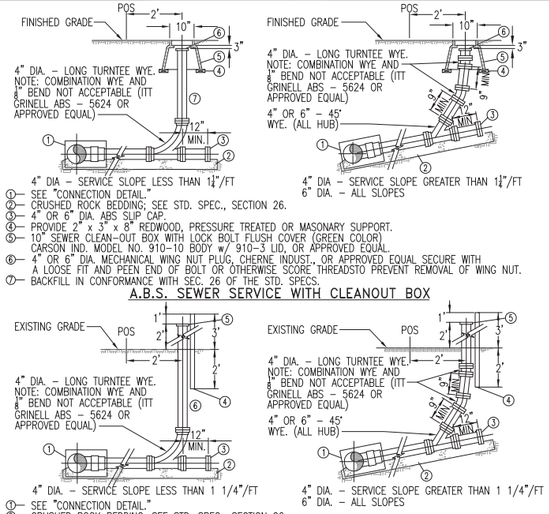

A.B.S. SEWER SERVICE S-260

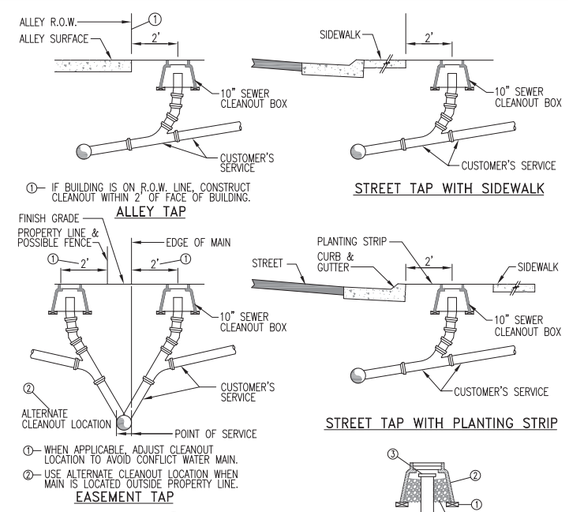

NOTES:

1. CLEANOUTS LOCATED IN NON-TRAVELED WAY SHALL HAVE CARSON BOX OR APPROVED EQUAL.
2. CLEANOUTS IN TRAVELED WAY SHALL HAVE CAST IRON CLEANOUT BOX AS SHOWN ABOVE.

TYPICAL SEWER SERVICE CLEANOUT LOCATIONS S-265

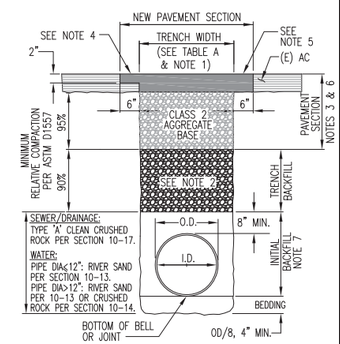

TYPICAL TRENCH SECTION

TABLE A			
TRENCH WIDTHS			
PIPE TYPE	PIPE I.D.	MINIMUM DIMENSION	MAXIMUM DIMENSION(4)
RIGID(1)	≤12"	PIPE O.D. + 16"	PIPE O.D. + 24"
	>12"	PIPE O.D. + 20"	PIPE O.D. + 36"
FLEXIBLE(2)	ALL	PER ASTM D2321(3) OR THE PIPE MANUFACTURER'S RECOMMENDATIONS, WHICHEVER IS GREATER.	

(1) RIGID PIPE = RCP, VCP & DIP.
(2) FLEXIBLE PIPE = ALL PIPE OTHER THAN RIGID PIPE.
(3) ASTM D2321 STATES THAT THE MINIMUM TRENCH WIDTH SHALL BE EQUAL TO THE PIPE O.D. PLUS 16" OR THE PIPE O.D. TIMES 1.25 PLUS 12", WHICHEVER IS GREATER.
(4) IF THE MAXIMUM DIMENSION AT THE TOP OF THE PIPE IS EXCEEDED, CONTRACTOR SHALL PROVIDE STRONGER PIPE OR IMPROVED BEDDING AND BACKFILL CONDITIONS, AS APPROVED BY THE ENGINEER, TO MEET THE NEW LOADING.

NOTES:

1. EXCAVATION, BACKFILL AND RE-PAVING OF TRENCHES SHALL CONFORM TO THE STANDARD SPECIFICATIONS UNLESS OTHERWISE INDICATED BY THE PLANS, PERMIT, SPECIAL PROVISIONS, OR THE ENGINEER.
2. TRENCH BACKFILL SHALL CONSIST OF CLASS 2 AGGREGATE BASE (AB) OR JOB EXCAVATED, NATIVE SOIL. NO ADDITIONAL COMPENSATION SHALL BE PAID FOR STOCKPILING, DRYING, WETTING OR PROCESSING THE NATIVE SOIL OR AB TO MEET THE MINIMUM STABILITY AND RELATIVE COMPACTION CRITERIA.
3. UNLESS OTHERWISE INDICATED IN THE SPECIAL PROVISIONS, THE NEW PERMANENT PAVEMENT SHALL CONFORM TO THE TYPE AND THICKNESS OF THE PAVEMENT REMOVED. IN NO CASE SHALL THE NEW PAVEMENT SECTION BE LESS THAN FOUR INCHES (4") OF AC ON TWELVE INCHES (12") OF CLASS 2 AGGREGATE BASE (AB).
4. EXISTING AC > 4" THICK: GRIND EXISTING AC 2" DEEP AND 6" WIDER THAN TRENCH ON BOTH SIDES. PLACE NEW AC.
5. EXISTING AC ≤ 4" THICK: SAW CUT AND PLACE NEW AC 6" WIDER THAN TRENCH AS SHOWN ON BOTH SIDES.
6. NON-PAVEMENT AREAS: IN NON-PAVEMENT AREAS, THE PAVEMENT SECTION SHALL BE REPLACED WITH JOB EXCAVATED NATIVE SOIL OR OTHER APPROVED BACKFILL COMPACTED TO AT LEAST 90% RELATIVE COMPACTION PER ASTM D1557.
7. SHOVEL SLICE, TAMP, AND/OR VIBRATE MATERIAL UNDER AND AROUND THE PIPE TO A FIRM NON-YIELDING CONDITION TO SATISFACTION OF THE ENGINEER.

BACKFILL AND RESURFACING IN PAVED AREAS T-80

WELL REHABILITATION PROJECT PHASE 3
R:\Civil3D Projects\Z14110105_Well-Rehab_Ph3\Dwgs

PN: Z14110105

REVISIONS			
NO.	DESCRIPTION	DATE	BY

BENCH MARK ELEV. _____
DESCRIPTION:

FIELD BOOK
SCALE: H: N.A. V: N.A.
1"
ON ORIGINAL SCALE DRAWING ADJUST SCALED DIMENSIONS IF THIS DOES NOT SCALE AT 1"

CITY OF SACRAMENTO
DEPARTMENT OF UTILITIES

DRAWN BY: A. VELAZQUEZ DATE: SEP 2014
DESIGNED BY: M. THOMAS R.C.E. NO. C66780 DATE: SEP 2014
CHECKED BY: D. SHERRY R.C.E. NO. C63770 DATE: SEP 2014

REGISTERED PROFESSIONAL ENGINEER REGAN ELIZABETH THOMAS No. C66780 Exp. 09/30/14 CIVIL STATE OF CALIFORNIA

IMPROVEMENT PLANS FOR:
WELL REHABILITATION PROJECT PHASE 3

CITY SEWER DETAILS

GIS GRID NO. GOT 6C
PN: Z14110105
DWG. NO. C-22
SHEET 50 OF 54

PN: Z14110104 WELL REHABILITATION PROJECT PHASE 3

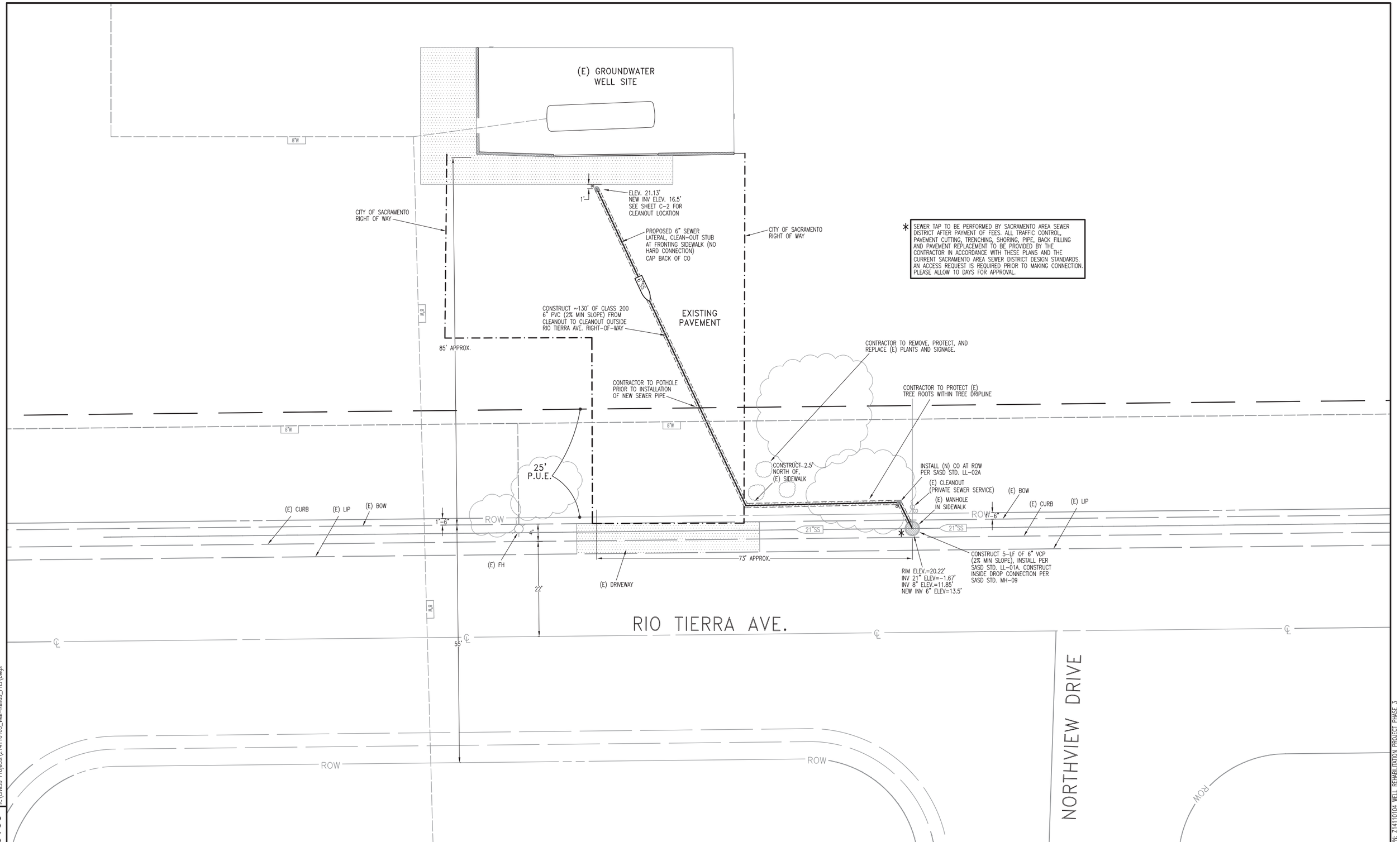

WELL REHABILITATION PROJECT PHASE 3
R:\Civil3D Projects\Z14110105_Well-Rehab_Ph3\Dwgs

PN: Z14110104 WELL REHABILITATION PROJECT PHASE 3

PN: Z14110105

REVISIONS			
NO.	DESCRIPTION	DATE	BY

BENCH MARK ELEV. _____
DESCRIPTION:

FIELD BOOK

SCALE:
H: N.A.
V: N.A.

1"
ON ORIGINAL SCALE DRAWING ADJUST SCALED DIMENSIONS IF THIS DOES NOT SCALE AT 1"

CITY OF SACRAMENTO
DEPARTMENT OF UTILITIES

DRAWN BY: A. VELAZQUEZ
DATE: SEP 2014

DESIGNED BY: M. THOMAS
R.C.E. NO. C66780 DATE: SEP 2014

CHECKED BY: D. SHERRY
R.C.E. NO. C63770 DATE: SEP 2014

REGISTERED PROFESSIONAL ENGINEER
MEGAN ELIZABETH THOMAS
No. C66780
Exp. 09/30/14
CIVIL
STATE OF CALIFORNIA

IMPROVEMENT PLANS FOR:
WELL REHABILITATION PROJECT PHASE 3
COUNTY SEWER PLAN-WELL 94
NEAR 620 RIO TIERRA AVE (APN 250-0520-006)

GIS GRID NO.
GOT GRID

PN: Z14110105

DWG. NO. C-23
SHEET 51 OF 54

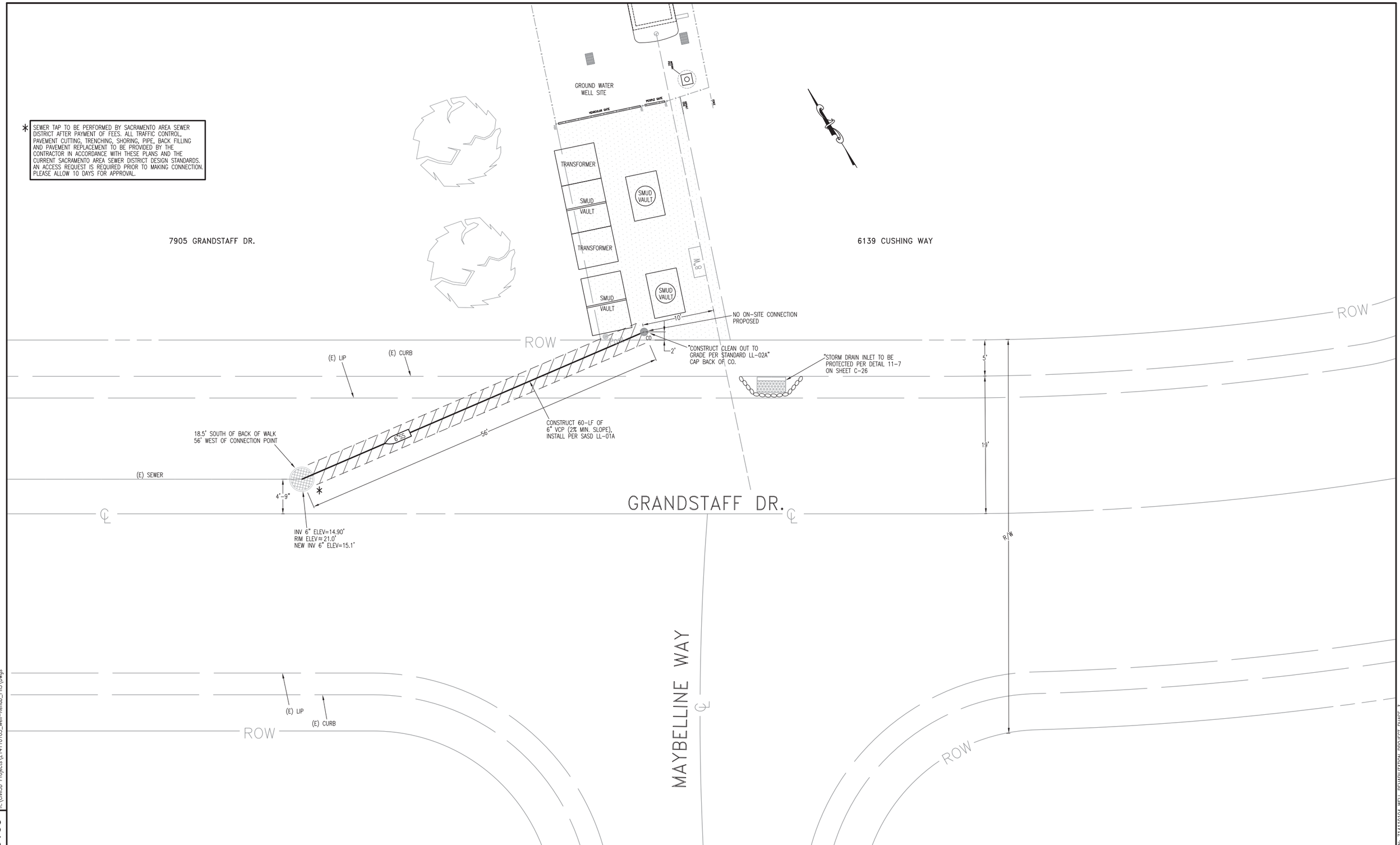

REVISIONS			
NO.	DESCRIPTION	DATE	BY

BENCH MARK ELEV. _____
DESCRIPTION:

FIELD BOOK

SCALE:
H: 1"=6'-0"
V: N.A.

1"
ON ORIGINAL SCALE DRAWING ADJUST SCALED DIMENSIONS IF THIS DOES NOT SCALE AT 1"

CITY OF SACRAMENTO
DEPARTMENT OF UTILITIES

DRAWN BY: A. VELAZQUEZ
DATE: SEP 2014

DESIGNED BY: M. THOMAS
R.C.E. NO. C66780 DATE: SEP 2014

CHECKED BY: D. SHERRY
R.C.E. NO. C63770 DATE: SEP 2014

REGISTERED PROFESSIONAL ENGINEER
KEAN ELIZABETH HOWARD
No. C66780
Exp. 09/30/14
CIVIL
STATE OF CALIFORNIA

IMPROVEMENT PLANS FOR:
WELL REHABILITATION PROJECT PHASE 3
COUNTY SEWER PLAN-WELL 107
7907 GRANDSTAFF DR (APN 117-0021-023)

GIS GRID NO.
GOT GRID NO.
PN: Z14110105

DWG. NO. C-24
SHEET 52 OF 54

PN: Z14110105

WELL REHABILITATION PROJECT PHASE 3
R:\Civil3D Projects\Z14110105_Well-Rehab_Ph3\Dwgs

PN: Z14110104 WELL REHABILITATION PROJECT PHASE 3

SACRAMENTO AREA SEWER DISTRICT (SASD) REVISED 8/28/2012 SANITARY SEWER NOTES:

1. ALL CONSTRUCTION AND MATERIALS USED WITHIN THE PIPE SHALL BE IN ACCORDANCE WITH THE MOST RECENT EDITION OF THE SASD DESIGN STANDARDS AND THE SASD CONSTRUCTION SPECIFICATIONS. THE LATEST EDITION SHALL TAKE PRECEDENCE. THE CONTRACTOR SHALL OBTAIN AND USE ALL APPLICABLE ADDENDUMS. INTERMEDIATE BACKFILL, FINAL BACKFILL, AND ALL ROAD SECTIONS SHALL BE CONSTRUCTED IN ACCORDANCE WITH THE GOVERNING JURISDICTION STANDARD CONSTRUCTION SPECIFICATIONS.

2. THE CONTRACTOR SHALL NOTIFY THE APPROPRIATE INSPECTION OFFICE FIVE (5) WORKING DAYS IN ADVANCE OF BEGINNING WORK:
   a. FOR COLLECTOR FACILITIES
      i. FOR PROJECTS LOCATED WITHIN THE UNINCORPORATED COUNTY, CITY OF CITRUS HEIGHTS, CITY OF RANCHO CORDOBA AND THE CITY OF ELK GROVE CONTACT THE SACRAMENTO COUNTY CONSTRUCTION MANAGEMENT AND INSPECTION DIVISION AT 875-2700.
      ii. FOR PROJECTS LOCATED WITHIN THE CITY OF SACRAMENTO LIMITS CONTACT PUBLIC UTILITIES DEPARTMENT AT 808-6810.
   b. FOR TRUNK FACILITIES
      i. CONTACT THE SACRAMENTO COUNTY CONSTRUCTION MANAGEMENT AND INSPECTION DIVISION AT 875-2700.

3. PLANS SHALL BE RESUBMITTED FOR APPROVAL IF CONSTRUCTION OF SEWER FACILITIES HAS NOT BEGUN WITHIN ONE YEAR AFTER THE FINAL APPROVAL DATE OF THESE IMPROVEMENT PLANS.

4. ALL WORK SHALL BE INSPECTED BY THE SASD INSPECTION STAFF PRIOR TO BACKFILLING THE PIPE ZONE.

5. DIMENSIONS SHOWN ON PLANS ARE THE CENTERLINE OF PIPE AND OR MANHOLES, UNLESS OTHERWISE NOTED.

6. ALL MANHOLES SHALL BE 48" IN DIAMETER, UNLESS OTHERWISE SHOWN.

7. SANITARY SEWER MAINS SHALL BE CONSTRUCTED OF EXTRA STRENGTH VCP PIPE WITH TYPE II BEDDING AND BACKFILL, UNLESS OTHERWISE SPECIFIED.

8. CONTRACTOR SHALL USE SIX-FOOT (6') PIPE LENGTHS IN CURVED SECTIONS, UNLESS OTHERWISE NOTED.

9. COMMERCIAL AND RESIDENTIAL LOWER LATERALS SHALL BE CONSTRUCTED PER SASD DESIGN STANDARDS DRAWING LL-01A.

10. CONSTRUCTION OF A CLEANOUT TO GRADE FOR ALL LOWER LATERALS IS REQUIRED PER SASD DESIGN STANDARD DRWING LL-02A.

11. ANY WATER ENTERING THE SANITARY SEWER SYSTEM TO BE CONSTRUCTED UNDER THESE PLANS SHALL NOT BE DISCHARGED TO THE EXISTING SYSTEM. PLUGS MUST BE INSTALLED IN EXISTING MANHOLES AS NECESSARY TO PERMIT PUMPING THE NEW SYSTEM CLEAR OF WATER AND DEBRIS PRIOR TO ACCEPTANCE. CARE SHALL BE EXERCISED IN LOCATING PLUGS TO AVOID INTERRUPTING SERVICE CONNECTIONS. MORTAR AND BRICKS OR MECHANICAL DEVICE PLUGS MUST BE USED; INFLATABLE DEVICES ARE NOT SATISFACTORY.

12. SASD REQUIRES TELEVISION INSPECTION OF ALL CONSTRUCTED SEWER LINES IN ACCORDANCE WITH SECTION 333 OF THE SASD STANDARDS AND SPECIFICATIONS. THE SEWER INSPECTOR SHALL SIGN PLANS ON PROVIDED SIGNATURE BLOCK "OK TO SUBMIT FOR GRID NUMBERING" AFTER INSTALLATION OF ALL SEWER FACILITIES AND PRIOR TO OBTAINING DISTRICT GRID NUMBERS FOR TELEVISION INSPECTION.

13. THE CURRENT LIST OF SASD APPROVED TV CONTRACTORS GO TO http://www.sacsewer.com/pdf/aprv-tv-con.pdf OR CALL 916-876-PLAN (7526).

14. DEWATERING SHALL BE PERFORMED AS NECESSARY TO PROVIDE A STABLE TRENCH BOTTOM FOR PLACEMENT OF SEWER FACILITIES. PRIOR TO THE CONTRACTOR PLACING MATERIALS IN THE TRENCH, THE BOTTOM OF THE TRENCH SHALL BE CERTIFIED BY A GEOTECHNICAL ENGINEER VERIFYING THAT THE TRENCH MEETS THE REQUIREMENTS SPECIFIED IN THE GEOTECHNICAL REPORT. ADDITIONAL REQUIREMENTS FOR UNSTABLE CONDITIONS SHALL BE AT THE WRITTEN DIRECTION OF THE PROJECT GEOTECHNICAL ENGINEER OF RECORD. GEOTEXTILE FABRIC WILL BE REQUIRED AS DESCRIBED IN NOTE 2: SASD DESIGN STANDARD DRAWING P-01.

15. ANY DEVIATIONS FROM THE APPROVED PLANS SHALL BE SUBMITTED TO SASD FOR APPROVAL. ALL DEVIATIONS SHALL BE APPROVED IN WRITING BY SASD AS A PLAN REVISION PRIOR TO CONSTRUCTION. THE REQUEST FOR DEVIATION FORM CAN BE FOUND AT http://www.sacsewer.com/pdf/form-request-for-deviation.pdf

16. SEWER TAP TO BE PERFORMED BY SACRAMENTO AREA SEWER DISTRICT AFTER PAYMENT OF FEES BY CONTRACTOR. ALL TRAFFIC CONTROL, PAVEMENT CUTTING, TRENCHING, SHORING, PIPE, BACK FILLING AND PAVEMENT REPLACEMENT TO BE PROVIDED BY THE CONTRACTOR IN ACCORDANCE WITH THESE PLANS AND THE CURRENT SACRAMENTO AREA SEWER DISTRICT DESIGN STANDARDS. AN ACCESS REQUEST IS REQUIRED PRIOR TO MAKING CONNECTION. PLEASE ALLOW 20 DAYS FOR APPROVAL.

GENERAL NOTES:

1. ALL CONSTRUCTION AND MATERIALS SHALL BE IN ACCORDANCE WITH THE LATEST EDITIONS OF THE COUNTY OF SACRAMENTO STANDARD CONSTRUCTION SPECIFICATIONS AND IMPROVEMENT STANDARDS. WHERE INCONSISTENCIES EXIST, THE LATEST EDITION SHALL TAKE PRECEDENCE.

2. PUBLIC SAFETY AND TRAFFIC CONTROL SHALL BE PROVIDED IN ACCORDANCE WITH SECTION 6-12 & 6-13 OF THE STANDARD SPECIFICATIONS AND AS DIRECTED BY THE COUNTY INSPECTOR. SAFE VEHICULAR AND PEDESTRIAN ACCESS SHALL BE PROVIDED AT ALL TIMES DURING CONSTRUCTION.

3. THE CONSULTING ENGINEER SHALL NOTIFY THE COUNTY OF SACRAMENTO CONSTRUCTION INSPECTION OFFICE UPON THE COMPLETION OF STAKING. PHONE: (916) 875-2700.

4. THE CONTRACTOR SHALL NOTIFY THE COUNTY OF SACRAMENTO CONSTRUCTION INSPECTION OFFICE TWO WORKING DAYS PRIOR THE INTENTION TO COMMENCE THE WORK. THE CONTRACTOR SHALL NOT START ANY GRADING UNTIL THE COUNTY COMPLETES A PRE-CONSTRUCTION MEETING. PHONE: (916) 875-2700

5. THE COUNTY OF SACRAMENTO IS A MEMBER OF THE UNDERGROUND SERVICE ALERT (U.S.A.) ONE CALL PROGRAM. THE CONTRACTOR OR ANY SUB CONTRACTOR FOR THIS CONTRACT SHALL NOTIFY MEMBER OF U.S.A. TWO WORKING DAYS IN ADVANCE OF PERFORMING ANY EXCAVATION WORK BY CALLING THE TOLL-FREE NUMBER: 1 (800) 227-2600. THOMAS BROTHERS MAP PAGE 227 INDEX D-2, 2008 EDITION.

6. THE CONTRACTOR SHALL BE RESPONSIBLE FOR THE PROTECTION OF ALL EXISTING SURVEY MONUMENTS AND OTHER SURVEY MARKERS DURING CONSTRUCTION. ALL MONUMENTS OR MARKERS DESTROYED DURING CONSTRUCTION SHALL BE REPLACED AT THE CONTRACTOR'S EXPENSE.

7. ALL SERVICE SEWERS SHALL HAVE FOUR TO FIVE FEET OF COVER AT THE PROPERTY LINE OR RIGHT OF WAY. UNLESS OTHERWISE NOTED ON THE PLANS.

8. EROSION CONTROL MEASURES SHALL BE IN ACCORDANCE WITH SECTION 11 OF THE COUNTY OF SACRAMENTO IMPROVEMENT STANDARDS.

9. WHENEVER THE WORK AREA IS ADJACENT TO A TRAFFIC LANE AND THERE IS A CUT, DITCH, OR TRENCH MORE THAN TWO INCHES DEEP, THE CONTRACTOR SHALL MAINTAIN CONTINUOUS BARRICADES SPACED AT 5'-0" INTERVALS FOR THIS PROJECT.

10. UNLESS SPECIFICALLY SET FORTH AS SPECIAL PROVISIONS, ALL MARKED LANES OF TRAFFIC SHALL BE UNOBSTRUCTED ON THE STREET IN EACH DIRECTION DURING PEAK TRAFFIC HOURS OF 7:00 TO 8:00 AM AND 3:30 TO 6:00 PM. A TRAFFIC LANE SHALL BE CONSIDERED UNOBSTRUCTED IF IT IS SURFACED WITH ASPHALT AND IS AT LEAST TEN FEET WIDE.

11. A TRAFFIC CONTROL PLAN SHALL BE PREPARED BY THE CONTRACTOR AND SUBMITTED TO THE SACRAMENTO COUNTY CONSTRUCTION MANAGEMENT DIVISION FOR REVIEW AT LEAST 20 DAYS PRIOR TO COMMENCEMENT OF ANY WORK. AN ENCROACHMENT PERMIT OR PLAN APPROVAL MUST BE FIRST OBTAIN PRIOR TO ANY WORK COMMENCING WITH THE COUNTY RIGHT OF WAY.

12. EROSION AND SEDIMENT CONTROL MEASURES FOR THIS PROJECT SHALL BE SUBSTANTIAL COMPLIANCE WITH THE STORM WATER POLLUTION PREVENTION PLAN (SWPPP) PREPARED FOR THE PROJECT IN ACCORDANCE WITH THE STATE'S GENERAL PERMIT FOR CONSTRUCTION ACTIVITIES. ACCORDING TO STATE LAW. IT IS THE RESPONSIBILITY OF THE PROPERTY OWNER THAT THE SWPPP IS KEPT UP-TO-DATE TO REFLECT CHANGING SITE CONDITIONS AND IS AVAILABLE ON THE PROJECT SITE AT ALL TIMES FOR REVIEW BY LOCAL AND STATE INSPECTORS.

13. EROSION CONTROL BEST MANAGEMENT PRACTICES (BMP) SHALL BE INSTALLED AND MAINTAIN DURING THE WET SEASON (OCTOBER 1 TROUGH APRIL 30). SEDIMENT CONTROL BMPS SHALL BE INSTALLED AND MAINTAIN YEAR ROUND.

14. ALL DRAINAGE INLETS IMMEDIATELY DOWNSTREAM OF THE WORK AREAS AND WITHIN THE WORK AREAS SHALL BE PROTECTED WITH SEDIMENT CONTROL AND INLET FILTER BAGS YEAR ROUND. INLET FILTER BAGS SHALL BE REMOVED FROM THE DRAINAGE INLETS UPON ACCEPTANCE OF THE PUBLIC IMPROVEMENTS BY THE COUNTY.

15. SEDIMENT CONTROL BMPS SHALL BE PLACED ALONG PROJECT PERIMETER WHERE DRAINAGE LEAVES THE PROJECT. SEDIMENT CONTROL BMPS SHALL BE MAINTAIN YEAR ROUND UNTIL THE CONSTRUCTION IS COMPLETE OR THE DRAINAGE PATTERN HAS BEEN CHANGED AND NO LONGER LEAVES THE SITE.

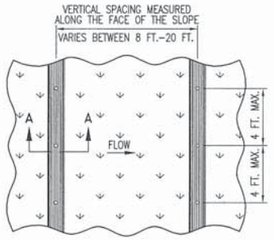

TYPICAL FIBER ROLL INSTALLATION

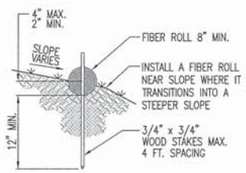

SECTION A – A

NOTES:

1.– INSTALL FIBER ROLLS IN A ROW ALONG A LEVEL CONTOUR.
2.– AT ENDS OF A ROW TURN THE LAST TWO FEET UP SLOPE SLIGHTLY.
3.– FIBER ROLLS SHALL BE BUTTED TIGHTLY AT THE JOINTS.
4.– DO NOT OVERLAP JOINTS.
5.– FIBER ROLLS SHALL BE INSPECTED WEEKLY AND AFTER STORMS, AND REPAINTED OR REPLACED AS NEEDED.

FIBER ROLLS 11–4

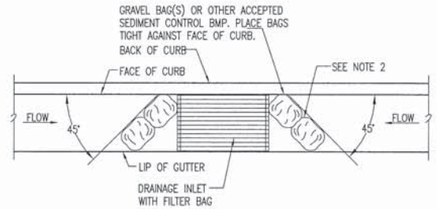

PLAN VIEW

NOTES:

1.– SEDIMENT TRAPPED UPSTREAM OF SEDIMENT CONTROL BMP SHALL BE REMOVED WEEKLY AND PRIOR TO A RAINFALL EVENT.
2.– PLACE BMP'S TIGHTLY TOGETHER AT JOINTS TO PREVENT OR MINIMIZE SEEPAGE AT JOINTS.

GRAVEL BAG BEAM 11–7

SEWER LATERAL CHART

Well No.	Sewer Main Location	Sewer Main Owner	Lateral Length (ft)	Connection to Sewer Main	Minimum Invert at Cleanout	Invert at Sewer Main	Utilities in Vicinity	Utility Depth at Crossing
94	City sidewalk	County	130	existing manhole	4.5-ft (at well)	~6.3-ft	8" private sewer (at manhole)	Invert: ~8.5-ft
							8" water main (~23-ft north of 21" sewer)	Top of pipe: ~3.5-ft
							PG&E (gas)	Unknown
107	City street	County	60	existing manhole	3.7-ft	~5.9-ft	SMUD	N/A
120	City street	City	40	21" main	4.7-ft	~13.0-ft	6" sewer main (~3-ft west of 21" sewer)	N/A
							6" water main (~7-ft east of 21" sewer)	Top of pipe: ~3.5-ft
							18" storm drain (~9-ft west of 21" sewer)	N/A
122	City street	City	60	existing manhole	4.0-ft	~6.7-ft	6" water main (~20-ft north of 8" sewer)	Top of pipe: ~2.5-ft
							24" storm drain (~20-ft east of 8" sewer)	N/A
							PG&E (gas)	Unknown
126	City street	City	50	15" RCP main	2.0-ft	~5.7-ft	18" storm drain (~6-ft south of 15" sewer)	Invert: ~4.6-ft
							6" water main (~5-ft north of 15" sewer)	N/A
129	easement	City	10	**new manhole** on ex. 6" VCP main	2.5-ft	~7.1-ft	8" water main (~3-ft east of sewer)	N/A
							PG&E (gas)	Unknown
133	easement	City	65	10" VCP main	6.6-ft	~9.4-ft	8" water main (~27-ft south of 10" sewer)	Top of pipe: ~5.5-ft
							15" storm drain (~18-ft south of 10" sewer)	N/A
138	City street	City	60	8" VCP main	2.0-ft	~2.7-ft	36" storm drain (~14-ft east of 8" sewer)	Invert: ~5.9-ft
							6" water main (~27-ft east of 8" sewer)	Top of pipe: ~3.5-ft
							PG&E (gas)	Unknown

Notes:

1) Prior to construction of sewer laterals, contractor shall pothole all utilities that will be crossed to confirm final depths of the new sewer laterals.
2) Contractor shall be responsible for coordinating work with the owners of the sewer mains.
3) Where cover is less than 24" due to sewer main depth and utility conflicts, sewer lateral shall be **6" ductile iron pipe** and the trench shall be backfilled with CDF slurry.
4) For Well 126 and Well 138, minimum slope of sewer lateral may be reduced to 1% in order to cross existing storm drainage systems.
5) Hot tap fees are required for County sewer connections and shall be paid by Contractor prior to installation. As of Aug. 28, 2014, hot taps are $1524 (plus $15.24 for processing) for each tap.