Meeting Date: **5/24/2016**

Report Type: Consent

Report ID: 2016-00514

City of SACRAMENTO

21

City Council Report
915 I Street, 1st Floor
www.CityofSacramento.org

Title: Cooperative Purchase Agreement: Replacement Storm Drain Cleaning Truck

Location: Citywide

Recommendation: Pass a Motion 1) approving the use of the National Joint Powers Alliance (NJPA) cooperative purchase agreement with Federal Signal Corporation, doing business as Vactor Manufacturing (Contract No. 022014-FSC) for the purchase of a replacement storm drain cleaning truck in an amount not to exceed $436,451; and 2) authorizing the City Manager or the City Manager's designee to execute the purchase specified above.

Contact: Iseña Garcia, Program Specialist, (916) 808-1163; Mark Stevens, Fleet Manager, (916) 808-5869, Department of Public Works

Presenter: None

Department: Public Works Department

Division: Fleet Management

Dept ID: 15003211

Attachments:

1-Description/Analysis

2-Agreement

City Attorney Review

Approved as to Form
Gary Lindsey
5/12/2016 2:30:09 PM

Approvals/Acknowledgements

Department Director or Designee: Jerry Way - 5/4/2016 1:22:03 PM

Description/Analysis

Issue Detail: The Department of Public Works (DPW), Fleet Management Division, has a customer requirement to purchase a replacement storm drain cleaning truck for the Department of Utilities (DOU), Operations and Maintenance Division.

Policy Considerations: The recommendations in this report are in accordance with City Code Chapter 3.56.

Economic Impacts: None

Environmental Considerations:

> **California Environmental Quality Act (CEQA):** No environmental review is necessary because the recommendations in this report involve the purchase of equipment and are not considered to be a project in accordance with Section 15378(b)(2) of the CEQA Guidelines.
>
> **Sustainability:** The recommended purchases are consistent with the Fleet Sustainability Policy adopted by City Council on February 16, 2010 (Resolution No. 2010-083).

Commission/Committee Action: None

Rationale for Recommendation: After reviewing the available purchase options, Fleet Management has determined that using the cooperative purchase agreement with NJPA and Federal Signal Corporation represents the most advantageous purchasing strategy. The contract was competitively bid, and NJPA receives greater discounts from the manufacturer due to a higher purchase volume than the City would receive if issuing its own bid.

In an ongoing effort to maximize cost savings and staff resources, many government agencies share contracting efforts through cooperative purchasing. This procurement approach increases pricing competitiveness and lowers operating costs through volume buying. When comparing the administrative costs of procurement, staff considers product research, source selection, specifications, advertising, staff reports, awarding, protest, and administration of the contract. It is often more cost-effective to eliminate the cost and time spent on these administrative processes and purchase items and services through a cooperative purchasing program.

The City has used both regional and national cooperative purchase agreements to complement its own contracting initiatives. Cooperative purchasing enables City departments to evaluate a broader range of contracting opportunities and to share resources with other jurisdictions. Cooperative purchasing also leverages internal and external resources to maximize cost savings opportunities for the City.

Financial Considerations: The recommended purchase of one replacement storm drain cleaning truck in an amount not to exceed $436,451 will be made from the DPW FY2015/16 operating budget (Fleet Fund, Fund 6501) and charged to DOU's multi-year operating project for replacement vehicles and equipment (I06013143, Storm Drainage Fund, Fund 6011). Sufficient funds are available in each of these budgets to make the recommended purchase.

Local Business Enterprise (LBE): Federal Signal Corporation is not an LBE. The minimum LBE participation requirement is waived for the City's use of cooperative purchase agreements that have been competitively bid, evaluated, and awarded by other governmental agencies that may or may not have similar LBE programs.

FORM D

Formal Offering of Proposal
(To be completed Only by Proposer)

SEWER VACUUM, HYDRO-EXCAVATION, AND/OR STREET SWEEPER EQUIPMENT WITH RELATED ACCESSORIES AND SUPPLIES,

In compliance with the Request for proposal (RFP) for "SEWER VACUUM, HYDRO-EXCAVATION, AND/OR STREET SWEEPER EQUIPMENT WITH RELATED ACCESSORIES AND SUPPLIES", the undersigned warrants that I/we have examined this RFP and, being familiar with all of the instructions, terms and conditions, general specifications, expectations, technical specifications, service expectations and any special terms, do hereby propose, fully commit and agree to furnish the defined equipment/products and related services in full compliance with all terms, conditions of this RFP, any applicable amendments of this RFP, and all Proposer's Response documentation. Proposer further understands they accept the full responsibility as the sole source of responsibility of the proposed response herein and that the performance of any sub-contractors employed by the Proposer in fulfillment of this proposal is the sole responsibility of the Proposer.

Company Name: Federal Signal Corp. Date: Feb. 17, 2014

Company Address: 1415 W. 22nd Street Suite 1100

City: Oak Brook State: IL Zip: 60523

Contact Person: David Parizzi Title: Business Development Mgr. - ESG

Authorized Signature (ink only): David Parizzi David Parizzi
(Name printed or typed)

Form E

Contract Acceptance and Award

(To be completed only by NJPA)

NJPA 022014 Sewer Vacuum, Hydro Excavators and/or Street Sweepers Equipment with Related Accessories + Supplies

Federal Signal Corp

Proposer's full legal name

Your proposal is hereby accepted and awarded. As an awarded Proposer, you are now bound to provide the defined product/equipment and services contained in your proposal offering according to all terms, conditions, and pricing set forth in this RFP, any amendments to this RFP, your Response, and any exceptions accepted or rejected by NJPA on Form C.

The effective start date of the Contract will be May 27th, 20 14 and continue for four years from the board award date. This contract has the consideration of a fifth year renewal option at the discretion of NJPA.

National Joint Powers Alliance® (NJPA)

NJPA Authorized signature: _____ Dr. Chad Coautte

NJPA Executive Director (Name printed or typed)

Awarded this 18th day of March, 20 14 **NJPA Contract Number** # 022014-FSC

NJPA Authorized signature: _____ Scott Veronen

NJPA Board Member (Name printed or typed)

Executed this 18th day of March, 20 14 **NJPA Contract Number** # 022014-FSC

Proposer hereby accepts contract award including all accepted exceptions and NJPA clarifications identified on FORM C.

Vendor Name Federal Signal Corp.

Vendor Authorized signature: _____ David Panizzi

(Name printed or typed)

Title: Business Development Manager

Executed this 24th day of March, 20 14 **NJPA Contract Number** # 022014-FSC

National Joint Powers Alliance® (herein NJPA)

REQUEST FOR PROPOSAL (herein RFP)

for the procurement of

SEWER VACUUM, HYDRO-EXCAVATION, AND/OR STREET SWEEPER EQUIPMENT WITH RELATED ACCESSORIES AND SUPPLIES

RFP Opening

February 21, 2014
8:00 A.M. Central Time
At the offices of the
National Joint Powers Alliance®
202 12th Street Northeast, Staples, MN 56479

RFP #022014

The National Joint Powers Alliance® (NJPA), on behalf of NJPA and its current and potential Member agencies to include all Government, Higher Education, K12 Education, Non-Profit, and all other Public Agencies located nationally in all fifty states and potentially internationally, issues this Request For Proposal (RFP) to result in a national contract solution for the procurement of SEWER VACUUM, HYDRO-EXCAVATION, AND/OR STREET SWEEPER EQUIPMENT WITH RELATED ACCESSORIES AND SUPPLIES. Details of this RFP are available beginning January 9, 2014 and continuing until February 13, 2014. Details may be obtained by letter of request to Maureen Knight, NJPA, 202 12th Street Northeast, P.O. Box 219, Staples, MN 56479, or by e-mail at RFP@njpacoop.org. Proposals will be received until February 20, 2014 at 4:30 p.m. Central Time at the above address and opened February 21, 2014 at 8:00 A.M. Central Time.

RFP Timeline

January 9, 2014	***Publication of RFP in the print and online Minneapolis Star Tribune, in the print version of the Salt Lake News within the state of Utah, in the print and online Daily Journal of Commerce within the State of Oregon, the NJPA website, and on the website of noticetobidders.com***
February 6, 2014 **10:00 A.M. Central Time**	***Pre-Proposal Conference (webcast – conference call - Connection info sent to all inquirers two business days prior to the event)***
February 13, 2014	***Deadline for RFP requests and questions***
February 20, 2014 **4:30 P.M. Central Time**	***Deadline for Submission of Proposals***
February 21, 2014 **8:00 A.M. Central Time**	***Public Opening of Proposals***

Direct questions regarding this RFP to:
Maureen Knight at maureen.knight@njpacoop.org or (218)895-4114

TABLE OF CONTENTS

1. INTRODUCTION
   A. About NJPA
   B. Joint Exercise of Powers Laws
   C. Why Respond to a National Cooperative Procurement Contract
   D. The Intent of This RFP
   E. Scope of This RFP
   F. Expectations for Equipment/Products and Services Being Proposed
   G. Solutions Based Solicitation
   H. Inquiry Period
   I. Pre-Proposal Conference
2. DEFINITIONS
   A. Proposer – Vendor
   B. Contract
   C. Time
   D. Proposer's Response
   E. Currency
   F. FOB
3. INSTRUCTIONS FOR PREPARING YOUR PROPOSAL
   A. Pre-Proposal Conference
   B. Identification of Key Personnel
   C. Proposer's Exceptions to Terms and Conditions
   D. Formal Instructions to Proposers
   E. Questions and Answers About This RFP
   F. Modification or Withdrawal of a Submitted Proposal
   G. Value Added Attributes, Products/Services
   H. Certificate of Insurance
   I. Order Process and/or Funds Flow
   J. Administrative Fees
4. PRICING STRATEGIES
   A. Line-Item Pricing
   B. Percentage Discount From Catalog or Category
   C. Hot List Pricing
   D. Ceiling Price
   E. Volume Price Discounts
   F. Sourced Product/Equipment /Open Market Items
   G. Cost Plus a Percentage of Cost
   H. Total Cost of Acquisition
   I. Requesting Product and Service Additions/Deletions
   J. Requesting Pricing Changes
   K. Price and Product Changes Format
   L. Single Statement of Pricing – Historical Record of Pricing
   M. Payment Terms
   N. Sales Tax
   O. Shipping and Shipping Program
   P. Normal Working Hours
5. MARKETING PLAN
6. PROPOSAL OPENING PROCEDURE
7. EVALUATION OF PROPOSALS
   A. Proposal Evaluation Process
   B. Proposer Responsiveness
   C. Proposal Evaluation Criteria
   D. Other Consideration
   E. Cost Comparison
   F. Product Testing
   G. Past Performance Information
   H. Waiver of Formalities
8. POST AWARD OPERATING ISSUES
   A. Subsequent Agreements
   B. NJPA Member Sign-up Procedure
   C. Reporting of Sale Activity
   D. Audits
   E. Hub Partner
   F. Trade-Ins
   G. Out of Stock Notification
   H. Termination of a Contract resulting from this RFP
9. GENERAL TERMS AND CONDIITONS
   A. Advertisement of RFP
   B. Advertising a Contract Resulting From This RFP
   C. Applicable Law
   D. Assignment of Contract
   E. List of Proposers
   F. Captions, Headings, and Illustrations
   G. Data Practices
   H. Entire Agreement
   I. Force Majeure
   J. Gratuities
   K. Hazardous Substances
   L. Legal Remedies
   M. Licenses
   N. Material Suppliers and Sub-Contractors
   O. Non-Wavier of Rights
   P. Protests of Awards Made
   Q. Provisions Required by Law
   R. Right to Assurance
   S. Suspension or Disbarment Status
   T. Affirmative Action
   U. Severability
   V. Relationship of Parties
10. FORMS
   A, B, C, D, E, F, G & P
11. PRE-SUBMISSION CHECKLIST

1. INTRODUCTION

A. ABOUT NJPA

1.1 The National Joint Powers Alliance®- (NJPA)- is a public agency serving as a national municipal contracting agency established under the Service Cooperative statute by Minnesota Legislative Statute §123A.21 with the authority to develop and offer, among other services, cooperative procurement services to its membership. Eligible membership and participation includes states, cities, counties, all government agencies, both public and non-public educational agencies, colleges, universities and non-profit organizations.

1.2 Under the authority of Minnesota state laws and enabling legislation, NJPA facilitates a competitive bidding and contracting process on behalf of the needs of itself and the needs of current and potential member agencies nationally. This process results in national procurement contracts with various Vendors of products/equipment and services which NJPA Member agencies desire to procure. These procurement contracts are created in compliance with applicable Minnesota Municipal Contracting Laws. A complete listing of NJPA cooperative procurement contracts can be found at www.njpacoop.org.

1.3 NJPA is a public agency governed by publicly elected officials that serve as the NJPA Board of Directors. NJPA's Board of Directors calls for all proposals, awards all Contracts, and hosts those resulting Contracts for the benefit of its own and its Members use.

1.3.1 **Subject to Approval of the NJPA Board**: NJPA contracts are awarded by the action of NJPA Board of Directors. This action is based on the open and competitive bidding process facilitated by NJPA. The evaluation and resulting recommendation is presented to the Board of Directors by the NJPA Proposal Evaluation Committee.

1.4 NJPA currently serves over 47,000 member agencies nationally. Both membership and utilization of NJPA contracts continue to expand, due in part to the increasing acceptance of Cooperative Purchasing throughout the government and education communities nationally.

B. JOINT EXERCISE OF POWERS LAWS

1.5 NJPA cooperatively shares those contracts with its Members nationwide through various "Joint Exercise of Powers Laws" established in Minnesota and other States. The Minnesota "Joint Exercise of Powers Law" is Minnesota Statute §471.59 which states "Two or more governmental units…may jointly or cooperatively exercise any power common to the contracting parties…" Similar Joint Exercise of Powers Laws exists within the laws of each State of the United States. This Minnesota Statute allows NJPA to serve Member agencies located in all other states. Municipal agencies nationally have the ability to participate in cooperative purchasing activities as a result of specific laws of their own state. These laws can be found on our website at http://www.njpacoop.org/national-cooperative-contract-solutions/legal-authority/.

C. WHY RESPOND TO A NATIONAL COOPERATIVE PROCUREMENT CONTRACT

1.6 National Cooperative Procurement Contracts create value for Municipal and Public Agencies, as well as for Vendors of products/equipment and services in a variety of ways:

1.6.1 National cooperative contracts potentially **save the time and effort** of Municipal and Public Agencies who would have been otherwise charged with soliciting vendor responses to individual RFP's, resulting in individual contracts, to meet the procurement needs of their respective agencies. Considerable time and effort is also potentially saved by the Vendors who would have had to otherwise respond each of those individual RFPs. A single, nationally advertised RFP, resulting in a single, national cooperative contract can potentially replace

thousands of individual RFPs for the same products/services that might have been otherwise advertised by individual NJPA member agencies.

1.6.2 NJPA contracts offer our Members nationally leveraged **volume purchasing discounts**. Our contract terms and conditions offer the opportunity for Vendors to recognize individual member procurement volume commitment through additional volume based contract discounts.

1.7 State laws that permit or encourage cooperative purchasing contracts do so with the belief that cooperative efficiencies will result in lower prices, better overall value, and considerable time savings.

1.8 The collective purchasing power of thousands of NJPA Member agencies nationwide offers the opportunity for volume pricing discounts. Although no sales or sales volume is guaranteed by an NJPA Contract resulting from this RFP, substantial volume is anticipated and volume pricing is requested and justified.

1.9 NJPA and its Members desire the best value for their procurement dollar as well as a competitive price. Pre-competed procurement contracts offer NJPA and its Member agencies the ability to directly compare non-price factors in their procurement analysis. Vendors have the opportunity to display and highlight value added attributes of their company, equipment/products and services without constraints of a typical individual proposal process.

D. THE INTENT OF THIS RFP

1.10. **A national contract awarded by the NJPA Board of Directors:** The intent of this RFP is to award a national contract by the action of the NJPA Board of Directors. This action will be influenced by the recommendation of the NJPA Proposal Evaluation Committee, and as a result of the competitive proposal and evaluation process which has been designed to reflect the best interests of NJPA and its Member agencies. NJPA is seeking the most responsive Vendor relationship(s) to meet this need. The goal and intent of this RFP is to follow through with an award and contract, which will be marketed nationally through a cooperative effort between the awarded vendor(s) and NJPA.

1.11 NJPA's primary intent is to establish and provide a national cooperative procurement contract, offering opportunities for NJPA and our Member agencies to procure quality product/equipment and services as desired and needed. Contracts are expected to offer price levels reflective of the potential and collective volume of NJPA and the nationally established NJPA membership base.

1.11.1 Beyond our primary intent, NJPA further desires to:

- Award a four year term contract with a fifth year contract option resulting from this RFP;
- Offer and apply any applicable technological advances throughout the term of a contract resulting from this RFP;
- Deliver "Value Added" aspects of the company, equipment/products and services as defined in the "Proposer's Response";
- Deliver wide spectrums of solutions to meet the needs and requirement of NJPA and NJPA Member agencies.
- Award an exclusive contract to the most responsive vendor when it is deemed to be in the best interest of NJPA and the NJPA Member agencies.

1.12 Non-Manufacturer Awards: NJPA reserves the right to make an award related to this invitation to a non-manufacturer or dealer/distributor if such action is in the best interests of NJPA and its Members.

1.13 Exclusive or Multiple Awards: Based on the goals and scope of this RFP, NJPA is requesting responders to demonstrate their ability to serve the needs of NJPA's national membership. It is NJPA's

intent and desire to award a contract to a single exclusive Vendor to serve our membership's needs. To meet the goals of this RFP, NJPA reserves the right to award a Contract to multiple Proposers where the result of the responding Proposers justifies a multiple award and multiple contracts are deemed to be in the best interests of NJPA Member agencies.

E. SCOPE OF THIS RFP

1.14 The scope, goal and intent of this RFP is to award a contract to a qualifying vendor defined as a manufacturer, provider, or dealer/distributor, established as a Proposer, and deemed responsive through our open and competitive proposal process. Vendors will be awarded contracts based on the proposal and responders demonstrated ability to meet the expectations of the RFP and demonstrate the overall highest valued solutions which meet and/or exceed the current and future needs and requirements of NJPA and its Member agencies nationally within the scope of **SEWER VACUUM, HYDRO-EXCAVATION, AND/OR STREET SWEEPER EQUIPMENT WITH RELATED ACCESSORIES AND SUPPLIES**. Qualifying Proposers who are able to anticipate the current and future needs and requirements of NJPA and NJPA member agencies; demonstrate the knowledge of any and all applicable industry standards, laws and regulations; and possess the willingness and ability to distribute, market to and service NJPA Members in all 50 states are preferred. NJPA requests proposers submit their entire product line as it applies and relates to the scope of this RFP. All proposals deemed responsive will be evaluated based on their ability to provide the overall highest value to NJPA and NJPA Member agencies. One of the measures of overall highest value will be the proposed breadth and depth of products and services.

1.15 Best and Most Responsive – Responsible Proposer: It is the intent of NJPA to award a Contract to the best and most responsible and responsive Proposer(s) offering the best overall quality and selection of equipment/products and services meeting the commonly requested specifications of the NJPA and NJPA Members, provided the Proposer's Response has been submitted in accordance with the requirements of this RFP.

1.16 Sealed Proposals: NJPA will receive sealed proposal responses to this RFP in accordance with accepted standards set forth in the Minnesota Procurement Code and Uniform Municipal Contracting Law. Awards may be made to responsible and responsive Proposers whose proposals are determined in writing to be the most advantageous to NJPA and its current or qualifying future NJPA Member agencies.

1.17 Use of Contract: Any Contract resulting from this solicitation shall be awarded with the understanding that it is for the sole convenience of NJPA and its Members. NJPA and/or its members reserve the right to obtain like product/equipment and services solely from this Contract or from another contract source of their choice or from a contract resulting from their own procurement process.

1.18 NJPA's interest in a contract resulting from this RFP: Not withstanding its own use, to the extent NJPA issues this RFP and any resulting contract for the use of its Members, NJPA's interests and liability for said use shall be limited to the competitive proposal process performed and terms and conditions relating to said contract and shall not extend to the products, services, or warranties of the Awarded Vendor or the intended or unintended effects of the product/equipment and services procured there from.

1.19 Awarded Vendor's interest in a contract resulting from this RFP: Awarded Vendors will be able to offer to NJPA, and current and potential NJPA Members, only those products/equipment and services specifically awarded on their NJPA Awarded Contract(s). Awarded Vendors may not offer as "contract compliant", products/equipment and services which are not specifically identified and priced in their NJPA Awarded Contract.

1.20 Sole Source of Responsibility- NJPA desires a "Sole Source of Responsibility" Vendor meaning the Vendor will take sole responsibility for the performance of delivered products/services. NJPA also desires sole responsibility with regard to:

1.20.1 Scope of Products/Services: NJPA desires a provider for the broadest possible scope of products/equipment and services being proposed over the largest possible geographic area and to the largest possible cross-section of NJPA current and potential Members.

1.20.2 Vendor use of sub-contractors in sourcing or delivering product/equipment and services: NJPA desires a single source of responsibility for equipment/products and services proposed. Proposers are assumed to have sub-contractor relationships with all organizations and individuals whom are external to the Proposer and are involved in providing or delivering the product/equipment and services being proposed. Vendor assumes all responsibility for the equipment/products and services and actions of any such Sub-Contractor.

1.21 Additional Definitions for the scope of this solicitation.

1.21.1 In addition to **SEWER VACUUM, HYDRO-EXCAVATION, AND/OR STREET SWEEPER EQUIPMENT WITH RELATED ACCESSORIES AND SUPPLIES, this solicitation should be read to include, but not limited to:**

1.21.1.1 N/A

1.21.2 NJPA reserves the right to limit the scope of this solicitation for NJPA and current and potential NJPA member agencies.

1.22 Suggested Solutions Options

1.22.1 All potential Proposers are assumed to be professionals in their respective fields. As professionals you are deemed to be intimately familiar with the spectrum of NJPA and NJPA Members' needs and requirements with respect to the scope of this RFP.

1.22.2 With this intimate knowledge of NJPA and NJPA Members' needs, Proposers are instructed to provide their proposal response in a format describing their solutions to those current and future needs and requirements. Proposers should take care to be economical in their response to this RFP.

1.22.3 Multiple solutions to the needs of NJPA and NJPA Members are possible. **Examples could include:**

1.22.3.1 Equipment/Products Only Solution: Equipment/products Only Solution may be appropriate for situations where NJPA or NJPA Members possess the ability, either in-house or through local third party contractors, to properly install and bring to operation those equipment/products being proposed.

1.22.3.2 Turn-Key Solutions: A Turn-Key Solution is a combination of equipment/products and services which provides a single price for equipment/products, delivery, and installation to a properly operating status. Generally this is the most desirable solution as NJPA and NJPA Members may not possess, or desire to engage, personnel with the necessary expertise to complete these tasks internally or through other independent contractors

1.22.3.3 Good, Better, Best: Where appropriate and properly identified, Proposers are invited to offer the CHOICE of good – better – best multiple grade solutions to NJPA and NJPA Members' needs.

1.22.3.4 Proven – Accepted – Leading Edge Technology: Where appropriate and

properly identified, Proposers are invited to provide an appropriate identified spectrum of technology solutions to compliment or enhance the functionality of the proposed solutions to NJPA and NJPA Members' needs both now and into the future.

1.23 Overlap of Scope:

1.23.1 When considering equipment, products, or groups of product/equipment and services submitted as a part of your response, and whether inclusion of such will fall within a "Scope of Proposal", please consider the validity of an inverse statement.

- For example, pencils and post-it-notes can generally be classified as office supplies and office supplies generally include pencils and post-it-notes.
- In contrast, computers (PCs and peripherals) can generally be considered office supplies; however, the scope of office supplies does not generally include computer servers and infrastructure.
- In conclusion: With this in mind, individual products and services must be examined individually by NJPA, from time to time and in its sole discretion, to determine their compliance and fall within the original "Scope" as intended by NJPA.

1.24 Geographic Area to be Proposed: This RFP invites proposals to provide **SEWER VACUUM, HYDRO-EXCAVATION, AND/OR STREET SWEEPER EQUIPMENT WITH RELATED ACCESSORIES AND SUPPLIES** to NJPA and NJPA Members throughout the entire United States and possibly internationally. Proposers will be expected to express willingness to explore service to NJPA Members located abroad; however the lack of ability to serve Members outside of the United States will not be cause for non-award. The ability and willingness to serve Canada, for instance, will be viewed as a value-added attribute.

1.25 Manufacturer as a Proposer: If the Proposer is a Manufacturer or wholesale distributor, the response received will be evaluated on the basis of a response made in conjunction with that Manufacturer's authorized Dealer Network. Unless stated otherwise, a Manufacturer or wholesale distributor Proposer is assumed to have a documented relationship with their Dealer Network where that Dealer Network is informed of, and authorized to accept, purchase orders pursuant to any Contract resulting from this RFP on behalf of the Manufacturer or wholesale distributor Proposer. Any such dealer will be considered a sub-contractor of the Proposer/Vendor. The relationship between the Manufacturer and wholesale distributor Proposer and its Dealer Network may be proposed at the time of the proposed submission if that fact is properly identified.

1.26 Dealer/Re-seller as a Proposer: If the Proposer is a dealer or re-seller of the products and/or services being proposed, the response will be evaluated based on the Proposer's authorization to provide those products and services from their manufacturer. Where appropriate, Proposers must document their authority to offer those products and/or services.

1.27 Contract Term: At NJPA's option a contract resulting from this RFP will become effective either; 1) The date awarded by the NJPA Board of Directors, or 2) The day following the expiration date of an existing NJPA procurement contract for the same or similar product/equipment and services.

1.27.1 NJPA is seeking a Contract base term of four years as allowed by Minnesota Contracting Law. Full term is expected. One additional one-year renewal-extension may be offered by NJPA to Vendor beyond the original four year term if NJPA deems such action to be in the best interests of NJPA and its Members. NJPA reserves the right to conduct periodic business reviews throughout the term of the contract.

1.28 Minimum Contract Value: NJPA anticipates considerable activity resulting from this RFP and subsequent award; however, no commitment of any kind is made concerning actual quantities to be acquired. NJPA does not guarantee usage. Usage will depend on the actual needs of the NJPA Members and the value of the awarded contract.

1.29 Estimated Contract Volume: Estimated quantities and sales volume are based on potential usage by NJPA and NJPA Member agencies nationally.

1.30 Largest Possible Solution: If applicable, Contracts will be awarded to Proposer(s) able to deliver a proposal meeting the entire needs of NJPA and its Members within the scope of this RFP. NJPA prefers Proposers submit their complete product line of products and services described in the scope of this RFP. NJPA reserves the right to reject individual, or groupings of specific equipment/products and services proposals as a part of the award.

1.31 Contract Availability: This Contract must be available to all current and potential NJPA Members who choose to utilize this NJPA Contract to include all governmental and public agencies, public and private primary and secondary education agencies, and all non-profit organizations nationally.

1.32 Proposer's Commitment Period: In order to allow NJPA the opportunity to evaluate each proposal thoroughly, NJPA requires any response to this solicitation be valid and irrevocable for ninety (90) days after the date proposals were opened regarding this RFP.

F. EXPECTATIONS FOR EQUIPMENT/PRODUCTS AND SERVICES BEING PROPOSED

1.33 Industry Standards: Except as contained herein, the specifications or solutions for this RFP shall be those accepted guidelines set forth by the **SEWER VACUUM, HYDRO-EXCAVATION, AND/OR STREET SWEEPER EQUIPMENT WITH RELATED ACCESSORIES AND SUPPLIES** industry, as they are generally understood and accepted within that industry across the nation. Submitted products/equipment, related services, and their warranties and assurances are required to meet and/or exceed all current, traditional and anticipated needs and requirements of NJPA and its Members.

1.33.1 Deviations from industry standards must be identified by the Proposer and explained how, in their opinion, the equipment/products and services they propose will render equivalent functionality, coverage, performance, and/or related services. Failure to detail all such deviations may comprise sufficient grounds for rejection of the entire proposal.

1.33.2 Technical Descriptions/Specifications. Proposers must supply **sufficient** information to:

- Demonstrate the Proposer's knowledge of industry standards, and
- Identify the equipment/products and services being proposed, and
- Differentiate those products and services from others.

Excessive technical descriptions and specifications which, in the opinion of NJPA unduly enlarge the proposal response may reduce evaluation points awarded on Form G.

1.34 Important note: NJPA does not typically provide product and service specifications; rather NJPA is requesting an industry standard or accepted specification for the requested product/equipment and services. Where specific line items are specified, those line items should be considered the minimum which can be expanded by the Proposer to deliver the Proposer's "Solution" to NJPA and NJPA Members' needs.

1.35 Commonly used Product/Equipment and Services: It is important that the equipment/products and services submitted are the equipment/products and services commonly used by public sector entities.

1.36 New Current Model Product/Equipment: Proposals submitted shall be for new, current model products and services with the exception of certain close-out products allowed to be offered on the Proposer's "Hot List" described herein.

1.37 Compliance with laws and standards: All items supplied on this Contract shall comply with any current applicable safety or regulatory standards or codes.

1.38 Delivered and operational; Products/equipment offered herein are to be proposed based upon being delivered and operational at the NJPA Member's site. Exceptions to "delivered and operational" must be explicitly disclosed in the "Total Cost of Acquisition" section of your proposal response.

1.39 Warranty: The Proposer warrants that all products, equipment, supplies, and services delivered under this Contract shall be covered by the industry standard or better warranty. All products and equipment should carry a minimum industry standard manufacturer's warranty that includes materials and labor. The Proposer has the primary responsibility to submit product specific warranty as required and accepted by industry standards. Dealer/Distributors agree to assist the purchaser in reaching a solution in a dispute over warranty's terms with the manufacturer. Any manufacturer's warranty which is effective past the expiration of the warranty will be passed on to the NJPA member. Failure to submit a minimum warranty may result in non-award.

1.40 Proposer's Warrants: The Proposer warrants all products/equipment and related services furnished hereunder will be free from liens and encumbrances; defects in design, materials, and workmanship; and will conform in all respects to the terms of this RFP including any specifications or standards. In addition, Proposer/Vendor warrants the products/equipment and related services are suitable for and will perform in accordance with the purposes for which they were intended.

G. SOLUTIONS BASED SOLICITATION

1.41 NJPA solicitations and contract process will not offer specific specifications for proposers to meet or base your response on. This RFP is a "Solutions Based Solicitation." This means the proposers are asked to understand and anticipate the current and future needs of NJPA and the nationally located NJPA membership base, within the scope of this RFP, and including specifications commonly desired or required by law or industry standards. Your proposal will be evaluated in part on your demonstrated ability to meet or exceed the needs and requirements of NJPA and our member agencies within the defined scope of this RFP.

H. INQUIRY PERIOD

1.42 The inquiry period shall begin at the date of first advertisement and continue to the "Deadline for Requests." RFP packages shall be distributed to Potential Bidders during the inquiry period. The purpose for the defined "Inquiry Period" is to ensure proposers have enough time to complete and deliver the proposal to our office.

I. PRE-PROPOSAL CONFERENCE

1.43 Potential Proposers inquiring before the optional "Pre-Proposal Conference" will be invited via the e-mail address used to make their inquiry. The purpose of the pre-proposal conference is to allow Potential Proposers to ask questions and hear answers from their own questions and the questions of other Potential Proposers.

2. DEFINITIONS

A. PROPOSER - VENDOR

2.1 Exclusive Vendor- A sole Vendor awarded in a product category. NJPA reserves the right to award to an Exclusive Vendor in the event that such an award is in the best interests of NJPA Members nationally. A Proposer that exhibits and demonstrates the ability to offer and execute an outstanding overall program, demonstrates the ability and willingness to serve NJPA current and qualifying Members in all 50 states and comply with all other requirements of this RFP, is preferred.

2.2 Potential Proposer- A person or entity requesting a copy of this RFP.

2.3 Proposer- A company, person, or entity delivering a timely response to this RFP.

2.4 Vendor- One of a number of Proposers whose proposal has been awarded a contract pursuant to this RFP.

2.5 Request for Proposal- Herein referred to as RFP.

B. CONTRACT

2.6 "Contract" as used herein shall mean this RFP, pricing, and fully executed forms P, C, D and E ("Acceptance and Award") with final terms and conditions. Form E will be executed on or after award and will provide final clarification of terms and conditions of the award.

C. TIME

2.7 Periods of time, stated as number of days, shall be in calendar days.

D. PROPOSER'S RESPONSE

2.8 A Proposer's Response is the entire collection of documents as they are received by NJPA from a Potential Proposer in response to this RFP.

E. CURRENCY

2.9 All transactions are payable in U.S. dollars on U.S. sales. All administrative fees are to be paid in U.S. dollars.

F. FOB

2.10 FOB stands for "Freight On Board" and defines the point at which responsibility for loss and damage of product/equipment purchased is transferred from Seller to Buyer. "FOB Destination" defines that transfer of responsibility for loss is transferred from Seller to Buyer at the Buyer's designated delivery point.

2.11 FOB does not identify who is responsible for the costs of shipping. The responsibility for the costs of shipping is addressed elsewhere in this document.

3. INSTRUCTIONS FOR PREPARING YOUR PROPOSAL

A. PRE-PROPOSAL CONFERENCE

3.1 A non-mandatory pre-proposal conference will be held at the date and time specified in the time line on page one of this RFP. Conference call and web connection information will be sent to all Potential Proposers through the same means employed in their inquiry. The purpose of this conference call is to allow Potential Proposers to ask questions regarding this RFP. Only answers issued in writing by NJPA to questions asked before or during the Pre-proposal Conference shall be considered binding.

B. IDENTIFICATION OF KEY PERSONNEL

3.2 Vendor will designate one senior staff individual who will represent the awarded Vendor to NJPA. This contact person will correspond with members for technical assistance, questions or problems that may arise including instructions regarding different contacts for different geographical areas as needed.

3.3 Individuals should also be identified (if applicable) as the primary contacts for the contents of this proposal, marketing, sales, and any other area deemed essential by the Proposer.

C. PROPOSER'S EXCEPTIONS TO TERMS AND CONDITIONS

3.4 Any exceptions, deviations, or contingencies a Proposer may have to the terms and conditions contained herein must be documented on Form C.

3.5 Exceptions, deviations or contingencies stipulated in Proposer's Response, while possibly necessary in the view of the Proposer, may result in disqualification of a Proposal Response.

D. FORMAL INSTRUCTIONS TO PROPOSERS

3.6 It is the responsibility of all Proposers to examine the entire RFP package, to seek clarification of any item or requirement that may not be clear and to check all responses for accuracy before submitting a Proposal. Negligence in preparing a Proposal confers no right of withdrawal after the deadline for submission of proposals.

3.7 All proposals must be sent to "The National Joint Powers Alliance®, 202 12th ST NE Staples, MN 56479."

3.8 Format for proposal response: All proposals must be physically delivered to NJPA at the above address in the following format:

3.8.1 Hard copy original signed, completed, and dated forms C,D,F, and hard copy signed signature page only from forms A and P from this RFP,

3.8.2 Hard copies of all addenda issued for the RFP with original counter signed by the Proposer,

3.8.3 Certificate of insurance verifying the coverage identified in this RFP,

3.8.4 A complete copy of your response on a CD (Compact Disc) or flash drive. The copy shall contain completed Forms A,B,C,D,F & P, your statement of products and pricing (including apparent discount) together with all appropriate attachments. Everything you send with your hard copy should also be included in the electronic copy. As a public agency, NJPA proposals, responses and awarded contracts are a matter of public record, except for that data included in the proposals, responses and awarded contracts that is classified as nonpublic; thus, pursuant to NJPA policies and RFP terms and conditions, all documentation, except for that data which is nonpublic is available for review by the public through a public records request. If you wish to request that certain information that falls within Minnesota Statute §13.37 be redacted, such request must be made within thirty-days of award/non-award.

3.9 All Proposal forms must be submitted in English and be legible. All appropriate forms must be executed by an authorized signatory of the Proposer. Blue ink is preferred for signatures.

3.10 Proposal submissions should be submitted using the electronic forms provided. If a Proposer chooses to use alternative documents for their response, the proposer will be responsible for ensuring the content is effectively equal to the NJPA form and the document is in a format readable by NJPA.

3.11 It is the responsibility of the Proposer to be certain the proposal submittal is in the physical possession of NJPA on or prior to the deadline for submission of proposals.

3.11.1 Proposals must be submitted in a sealed envelope or box properly addressed to NJPA and prominently identifying the proposal number, proposal category name, the message **"Hold for Proposal Opening",** and the deadline for proposal submission. NJPA cannot be responsible for late receipt of proposals. Proposals received by the correct deadline for proposal submission will be opened and the name of each Proposer and other appropriate information will be publicly read.

3.12 Corrections, erasures, and interlineations on a Proposer's Response must be initialed by the authorized signer in original ink on all copies to be considered.

3.13 Addendums to the RFP: The Proposer is responsible for ensuring receipt of all addendums to this RFP.

3.13.1 Proposer's are responsible for checking directly with the NJPA website for addendums to this RFP.

3.13.2 Addendums to this RFP can change terms and conditions of the RFP including the deadline for submission of proposals.

E. QUESTIONS AND ANSWERS ABOUT THIS RFP

3.14 Upon examination of this RFP document, Proposer shall promptly notify the NJPA of any ambiguity, inconsistency, or error they may discover. Interpretations, corrections and changes to this RFP will be made by NJPA through addendum. Interpretations, corrections, or changes made in any other manner will not be binding and Proposer shall not rely upon such.

3.15 Submit all questions about this RFP, in writing, referencing **"SEWER VACUUM, HYDRO-EXCAVATION, AND/OR STREET SWEEPER EQUIPMENT WITH RELATED ACCESSORIES AND SUPPLIES** to Maureen Knight, NJPA 202 12th Street NE, Staples, MN 56479 or RFP@njpacoop.org. Those not having access to the Internet may call Maureen Knight at (218) 895-4114. Requests for additional information or interpretation of instructions to Proposers or technical specifications shall also be addressed to Maureen Knight. NJPA urges Potential Proposers to communicate all concerns well in advance of the deadline to avoid misunderstandings. Questions received less than seven (7) days ending at 4:00 p.m. Central Time of the seventh (7th) calendar day prior to proposal due-date cannot be answered.

3.16 If the answer to a question is deemed by NJPA to have a material impact on other potential proposers or the RFP itself, the answer to the question will become an addendum to this RFP.

3.17 If the answer to a question is deemed by NJPA to be a clarification of existing terms and conditions and does not have a material impact on other potential proposers or the RFP itself, no further documentation of that question is required.

3.18 As used in this solicitation, clarification means communication with a Potential Proposer for the sole purpose of eliminating minor irregularities, informalities, or apparent clerical mistakes in the RFP.

3.19 Addenda are written instruments issued by NJPA that modify or interpret the RFP. All addenda issued by NJPA shall become a part of the RFP. Addenda will be delivered to all Potential Proposers using the same method of delivery of the original RFP material. NJPA accepts no liability in connection with the delivery of said materials. Copies of addenda will also be made available on the NJPA website at www.njpacoop.org by clicking on "Current and Pending Solicitations" and from the NJPA offices. No questions will be accepted by NJPA later than seven (7) days prior to the deadline for receipt of proposals, except an addendum withdrawing the request for proposals or one that includes postponement of the date of receipt of proposals. Each Potential Proposer shall ascertain prior to submitting a Proposal

that it has received all addenda issued, and the Proposer shall acknowledge their receipt in its Proposal Response.

3.20 An amendment to a submitted proposal must be in writing and delivered to NJPA no later than the time specified for opening of all proposals.

F. MODIFICATION OR WITHDRAWAL OF A SUBMITTED PROPOSAL

3.21 A submitted proposal may not be modified, withdrawn from or cancelled by the Proposer for a period of ninety (90) days following the date proposals were opened regarding this RFP. **Prior** to the deadline for submission of proposals, any proposal submitted may be modified or withdrawn by notice to the NJPA Manager of Bids and Contracts. Such notice shall be submitted in writing and include the signature of the Proposer and shall be delivered to NJPA prior to the deadline for submission of proposals and it shall be so worded as not to reveal the content of the original proposal. However, the original proposal shall not be physically returned to the Potential Proposer until after the official proposal opening. Withdrawn proposals may be resubmitted up to the time designated for the receipt of the proposals if they are then fully in conformance with the Instructions to Proposer.

G. VALUE ADDED ATTRIBUTES, PRODUCTS/SERVICES

3.22 Examples of Value Added Attributes: Value-Added attributes, products and services are items offered in addition to the products and services being proposed which adds value to those items being proposed. The availability of a contract for maintenance or service after the initial sale, installation, and set-up may, for instance, be "Value Added Services" for products where a typical buyer may not have the ability to perform these functions.

3.23 Where to document Value Added Attributes: The opportunity to indicate value added dimensions and such advancements will be available in the Proposer's Questionnaire and Proposer's product and service submittal.

3.24 Value added equipment/products and services and expanded services, as they relate to this RFP, will be given positive consideration in the award selection. Consideration will be given to an expanded selection of "SEWER VACUUM, HYDRO-EXCAVATION, AND/OR STREET SWEEPER EQUIPMENT WITH RELATED ACCESSORIES AND SUPPLIES"**,** and advances to provide products/services, supplies meeting and/or exceeding today's industry standards and expectations. A value add would include a program or service that further serves the members needs above and possibly beyond standard expectation and complements the equipment/products and services and training. Value added could include areas of product and service, sales, ordering, delivery, performance, maintenance, technology, and service that furthers the functionality and effectiveness of the procurement process while remaining within the scope of this RFP.

3.25 Minority, Small Business, and Women Business Enterprise (WMBE) participation: It is the policy of some NJPA Members to involve Minority, Small Business, and WMBE contractors in the process to purchase product/equipment and related services. Vendors should document WMBE status for their organization AND any such status of their affiliates (i.e. Supplier networks) involved in carrying out the activities invited. The ability of a Proposer to provide "Credits" to NJPA and NJPA Members in these subject areas, either individually or through related entities involved in the transaction, will be evaluated positively by NJPA and reflected in the "value added" area of the evaluation. NJPA is committed to facilitating the realization of such "Credits" through certain structuring techniques for transactions resulting from this RFP.

3.26 Environmentally Preferred Purchasing Opportunities: There is a growing trend among NJPA

Members to consider the environmental impact of the equipment/products and related services they purchase. "Green" characteristics demonstrated by responding companies will be evaluated positively by NJPA and reflected in the "value added" area of the evaluation. Please identify any Green characteristics of the product/equipment and related services in your proposal and identify the sanctioning body determining that characteristic. Where appropriate, please indicate which products have been certified as "green" and by which certifying agency.

3.27 On-Line Requisitioning systems: When applicable, on-line requisitioning systems will be viewed as a value-added characteristic. Proposer shall include documentation about user interfaces that make on-line ordering easy for NJPA Members as well as the ability to punch-out from mainstream e-Procurement or Enterprise Resource Planning (ERP) systems that NJPA Members may currently utilize.

3.28 Financing: The ability of the Proposer to provide financing options for the products and services being proposed will be viewed as a Value Added Attribute.

H. CERTIFICATE OF INSURANCE

3.29 Vendors shall provide evidence of liability insurance coverage identified below in the form of an ACCORD binder form with their proposal. Upon Award issued pursuant to this contract, and prior to the execution of any commerce relating to such award, Vendor will be responsible for providing verification, in the form of an ACCORD binder identifying the coverage required below and identifying NJPA as a "Certificate Holder." Vendor will be responsible to maintain such insurance coverage at their own expense throughout the term of any contract resulting from this solicitation.

3.30 Any exceptions and/or assumptions to the insurance requirements ***must*** be identified on ***Attachment C.*** Exceptions and/or assumptions will be taken into consideration as part of the evaluation process; however, vendors must be specific. If vendors do not specify any exceptions and/or assumptions at time of proposal submission, NJPA will not consider any additional exceptions and/or assumptions during negotiations. Upon contract award, the successful vendor ***must*** provide the Certificate of Insurance identifying the coverage as specified**.**

3.31 The awarded vendor must maintain, for the duration of its contract, $1.5 million in General Liability insurance coverage or General Liability insurance in conjunction with an Umbrella for a total combined coverage of $1.5 million. Work on the contract shall not begin until after the awarded vendor has submitted acceptable evidence of the required insurance coverage. Failure to maintain any required insurance coverage or acceptable alternative method of insurance will be deemed a breach of contract.

MINIMUM SCOPE AND LIMITS OF INSURANCE: Vendor shall provide coverage with limits of liability not less than those stated below. An excess liability policy or umbrella liability policy may be used to meet the minimum liability requirements provided that the coverage is written on a "following form" basis.

Commercial General Liability – Occurrence Form
Policy shall include bodily injury, property damage and broad form contractual liability and XCU coverage.

Each Occurrence	$1,500,000

3.32 The insurance requirements herein are minimum requirements for this Contract and in no way limit the indemnity covenants contained in this Contract. NJPA in no way warrants that the minimum limits contained herein are sufficient to protect the Vendor from liabilities that might arise out of the performance of the work under this Contract by the Vendor, his agents, representatives, employees or subcontractors and Vendor is free to purchase additional insurance as may be determined necessary.

3.33 Acceptability of Insurers: Insurance is to be placed with insurers duly licensed or authorized to do business in the State of Minnesota and with an "A.M. Best" rating of not less than A- VII. NJPA in no way warrants that the above required minimum insurer rating is sufficient to protect the Vendor from potential insurer solvency.

3.34 Subcontractors: Vendors' certificate(s) shall include all subcontractors as additional insureds under its policies **or** Vendor shall furnish to NJPA separate certificates for each subcontractor. All coverage for subcontractors shall be subject to the minimum requirements identified above.

I. ORDER PROCESS AND/OR FUNDS FLOW

3.32 Please propose an order process and funds flow. Please choose from one of the following:

3.32.1 B-TO-G: The Business-to-Government order process and/or funds flow model involves NJPA Members issuing Purchase Orders directly to a Vendor and pursuant to a Contract resulting from this RFP. Administrative fees may also be used for purposes as allowed by Minnesota State Law and approved by the Board of Directors.

3.32.3 Other: Please fully identify.

J. ADMINISTRATIVE FEES

3.33 Proposer agrees to authorize and/or allow for an administrative fee payable to NJPA by an Awarded Vendor in exchange for its facilitation and marketing of a Contract resulting from this RFP to current and potential NJPA Members. This Administration Fee shall be:

3.33.1 Calculated as a percentage of the dollar volume of all equipment/products and services provided to and purchased by NJPA Members or calculated as reasonable and acceptable method applicable to the contracted transaction, and

3.33.2 Included in, and not added to, the pricing included in Proposer's Response to this RFP, and

3.33.3 Designed to offset the anticipated costs of NJPA's involvement in contract management, facilitating marketing efforts, Vendor training, and any order processing tasks relating to the Contract resulting from this RFP. Administrative fees may also be used for other purposes as allowed by Minnesota law. Administrative fees may also be used for other purposes as allowed by Minnesota law.

3.33.3.1 Typical administrative fees for a B-TO-G order process and funds flow is 2.0%.

3.34 The opportunity to propose these factors and an appropriate administrative fee is available in the Proposer's Questionnaire.

4. PRICING STRATEGIES

4.1 NJPA requests Potential Proposers respond to this RFP only if they are able to offer a wide array of equipment/products and services and at prices lower and better value than what they would ordinarily offer to single government agency, larger school district, or regional cooperative.

4.2 RFP is an "Indefinite Quantity Product/Equipment and Related Service Price and Program Request" with potential national sales distribution and service. Proposers are agreeing to fulfill Contract obligations regarding each product/equipment to which you provide a description and a price. If Proposer's solution requires additional supporting documentation, describe where it can be found in your submission. If Proposer offers the solution in an alternative fashion, describe your solution to be easily understood. All pricing must be copied on a CD along with other requested information as a part of a Proposer's

Response.

4.3 Regardless of the payment method selected by NJPA or NJPA Member, a total cost associated with any purchase option of the equipment/products and services and being supplied must always be disclosed at the time of purchase.

4.4 Primary Pricing/Secondary Pricing Strategies- All Proposers will be required to submit "Primary Pricing" in the form of either "Line-Item Pricing," or "Percentage Discount from Catalog Pricing," or a combination of these pricing strategies. Proposers are also encouraged to offer OPTIONAL pricing strategies such as but not limited to "Hot List," "Sourced Product/Equipment" and "Volume Discounts," as well as financing options such as leasing.

A. LINE-ITEM PRICING

4.5 Line-Item pricing- A pricing format where specific individual products and/or services are offered at specific individual Contract prices. Products/equipment and/or related services are individually priced and described by characteristics such as manufacture name, stock or part number, size, or functionality. This method of pricing offers the least amount of confusion as products/equipment and prices are individually identified however, Proposers with a large number of products/equipment to propose may find this method cumbersome. In these situations, a percentage discount from catalog or category pricing model may make more sense and increase the clarity of the contract pricing format.

4.6 All Line-Item Pricing items must be numbered, organized, sectioned, including SKU's (when applicable) and easily understood by the Evaluation Committee and members.

4.7 Line-Item Pricing items are to be submitted in an Excel spreadsheet format provided and are to include all appropriate identification information necessary to discern the line item from other line items in each Responder's proposal.

4.8 The purpose for the excel spreadsheet format for Line-Item Pricing is to be able to use the "Find" function to quickly find any particular item of interest. For that reason, Proposers are responsible for providing the appropriate product and service identification information along with the pricing information which is typically found on an invoice or price quote for such products/equipment and related services.

4.9 All products/equipment and related services typically appearing on an invoice or price quote must be individually priced and identified on the line-item price sheet, including any and all ancillary costs.

4.10 Proposers are asked to provide both a published "List" price as well as a "Proposed Contract Price" in their pricing matrix. "The published List" price will be the standard "quantity of one" price currently available to government and educational customers excluding cooperative and volume discounts.

B. PERCENTAGE DISCOUNT FROM CATALOG OR CATEGORY

4.11 Percent Discount From Catalog, list or Category Pricing- A specific percentage discount from a "Catalogue or List Price" defined as a published Manufacturer's Suggested Retail Price (MSRP) for the products/equipment or related services being proposed.

4.12 Individualized percentage discounts can be applied to any number of defined product groupings.

4.13 A Percentage Discount from MSRP may be applied to all elements identified in MSRP including all Manufacturer Options applicable to the product/equipment or related service.

4.14 Accessory options requested by the customer and related to the general scope of this RFP but are not under the current contract will be priced using a "Sourced Product/equipment pricing model" as

defined herein. See Section F

4.15 When a Proposer elects to use "Percentage Discount from Catalog or Category," Proposer will be responsible for providing and maintaining current published "MSRP" with NJPA and must be included in their proposal and provided throughout the term of any Contract resulting from this RFP.

4.16 NJPA reserves the right to review catalogs submitted to determine if the represented products and services reflect and relate to the scope of this RFP. Each new catalog received may have the effect of adding new product offerings and deleting products no longer carried by the Vendor. New catalogs shall apply to the Contract only upon approval of the NJPA. Non-approved use of catalogs may result in termination for convenience. New price lists or catalogs found to be offering non-contract items during the Contract may be grounds for terminating the Contract for convenience. New optional accessories for product/equipment and related services may be added to the Contract through the NJPA approval process at the time they become available.

C. HOT LIST PRICING

4.17 Where applicable, NJPA also invites the Vendor, at their option, to offer a specific selection of products/services, defined as a Hot List selection offer pricing at greater discounts or related advantages than those listed in the standard Contract pricing. All product/service pricing, including the Hot List Pricing, must be submitted electronically provided in Excel format. Hot List pricing must be submitted in a Line-Item format. Providing or offering a "Hot List Selection" of equipment/products and related services is optional. Equipment/products and related services may be added or removed from the "Hot List" at any time.

4.18 Hot List program and pricing when applicable may also be used to discount and liquidate close-out and discontinued equipment/products and related services as long as those close-out and discontinued items are clearly labeled as such. Current ordering process and administrative fees apply. This option must be published and made available to all NJPA Members.

4.19 Hot List Program and Pricing is allowed to change at the discretion of the Vendor within the definition of Hot List Pricing. The Vendor is responsible to maintain current Hot List product/equipment and related service descriptions and Pricing with NJPA.

D. CEILING PRICE

4.20 Proposal pricing is to be established as a ceiling price. At no time may the proposed equipment/products and related services be offered pursuant to this Contract at prices above this ceiling price without request and approval by NJPA. **IMPORTANT NOTE:** Contract prices may be reduced to allow for volume considerations and commitments and to meet the specific and unique needs of an NJPA Member.

4.21 Allowable specific needs may include competitive situations, certain purchase volume commitments or the creation of custom programs based on the individual needs of NJPA Members.

E. VOLUME PRICE DISCOUNTS

4.22 Proposers are free to offer volume commitment discounts from the contract pricing documented in a Contract resulting from this RFP. Volume considerations shall be determined between the Vendor and individual NJPA Members on a case-by-case basis.

4.23 Nothing in this Contract establishes a favored member relationship between the NJPA or any NJPA Member and the Vendor. The Vendor will, upon request by NJPA Member, extend this same reduced price offered or delivered to another NJPA Member provided the same or similar volume commitment, specific needs, terms, and conditions, a similar time frame, seasonal considerations, locations,

competitively situations and provided the same manufacturer support is available to the Vendor.

4.24 All price adjustments are to be offered equally to all NJPA Members exhibiting the same or substantially similar characteristics such as purchase volume commitments, and timing including the availability of special pricing from the Vendor's suppliers.

4.25 Additional Quantities:

4.25.1 The contract awarded vendor will accept orders for additional quantities at the same prices, terms and conditions, providing the NJPA Member exercises the option before a specific date, mutually agreed upon between member and contract awarded vendor at time of original purchase order.

4.25.2 Any extension(s) of pricing beyond the specific date shall be upon mutual consent between the NJPA Member and the contract awarded vendor.

F. SOURCED PRODUCT/EQUIPMENT /OPEN MARKET ITEMS

4.26 NJPA or NJPA Members may from time to time, request product/equipment and/or equipment/products and related services that are within the related scope of this RFP, which are not included in an awarded Vendor's line-item product/equipment and related service listing or "list or catalog." These items are known as Sourced Product/Equipment or Open Market Items.

4.27 An awarded Vendor resulting from this RFP may "Source" equipment/products and related services for NJPA or an NJPA Member to the extent they:

4.27.1 Identify all such equipment, products and services as "Sources Product/Equipment " or "Open Market Items" on any quotation issued in reference to an NJPA awarded contract, and provided to either NJPA or an NJPA Member, and

4.27.2 All applicable acquisition regulations pertaining to the purchase of such equipment, products and services have been followed, as defined by NJPA or the NJPA Member receiving quotation from Vendor, and

4.27.3 NJPA or the NJPA Member has determined the prices as quoted by Vendor for such equipment, products and services are deemed to be fair and reasonable and are acceptable to the member.

G. COST PLUS A PERCENTAGE OF COST

4.28 Cost plus a percentage of cost as a primary pricing mechanism is not desirable.

H. TOTAL COST OF ACQUISITION

4.29 The Total Cost of Acquisition for the equipment/products and related services being proposed, including those payable by NJPA Members to either the Proposer or a third party, shall be defined as:

- The cost of the proposed equipment/products product/equipment and related services delivered and operational for its intended purpose in the end-user's location.

4.30 For example, if you are proposing equipment/products only (IE, FOB Proposer's dock) your proposal would identify your deviation from the "Total Cost of Acquisition" of contracted equipment/products. The "Proposal should reflect that the contract does not provide for delivery beyond

Proposer's dock, nor any set-up activities or costs associated with those delivery or set-up activities." In contrast, proposed terms including all costs for product/equipment and services delivered and operational at to the end-user's location would require a disclosure of "None."

I. REQUESTING PRODUCT/EQUIPMENT AND RELATED SERVICE ADDITIONS/DELETIONS

4.31 Requests for product/equipment and related services, price changes, additions, deletions, or any related contract changes must be made in written form and shall be subject to approval by NJPA.

4.32 New equipment/products and related services may be added to a Contract resulting from this RFP at any time during that Contract to the extent those equipment/products and related services are within the scope of this RFP. Those requests are subject to review and approval of NJPA. Allowable new equipment/products and related services generally include new updated models of equipment/products and related services and or enhanced services previously offered which could reflect new technology and improved functionality.

4.33 Proposers representing multiple manufacturers, or carrying multiple related product lines may also request the addition of new manufacturers or product lines to their Contract to the extent they remain within the scope of this RFP.

4.34 NJPA's due diligence in analyzing any request for change is to determine if approval of the request is 1) within the scope of the original RFP, and 2) in the "Best Interests of NJPA and NJPA Members." We are looking for consistent pricing and delivery mechanisms and an understanding of what value the proposal brings to NJPA and NJPA Members.

4.35 Documenting the "Best Interests of NJPA and NJPA Members" when outdated equipment is being deleted is fairly straight forward since the product is no longer available and not relevant to the procurement Contract.

4.36 Requests must be in the form of 1) an NJPA Vendor Price and Product Change Request Form which includes a request to add the product/equipment line, a general statement identifying how the products to be added are within the scope of the original RFP, and making a general statement identifying that, if appropriate, the pricing is consistent with the existing Contract pricing. Further, provide detail as to what is being added at what price in the request form. Pending approval of your request by NJPA you will need to provide a complete re-statement of all pricing including all new prices/products AND existing prices and products/equipment.

4.37 NJPA's intent is to encourage Proposers to provide and document NJPA's due diligence in a clear and concise one page format on which we can approve and sign our acknowledgment and acceptance. This information must ultimately come from Proposers, and NJPA is requiring it in this format.

J. REQUESTING PRICING CHANGES

4.38 Price Decreases: Requests for standard Contract price decrease adjustments (percentage discount increases) are encouraged and will be allowed at any time based on market place efficiencies, market place competitiveness, improved technologies and/or improved methods of delivery or if Vendor engages in innovative procurement practices such as strategic sourcing, aggregate and volume purchasing. NJPA expects Vendors to propose their very best prices and anticipates price reductions due to the advancement of technologies and market place efficiencies. Documenting the "Best Interests of NJPA and NJPA Members" is highly valued when we are documenting price reductions.

4.39 Price increases: Requests for standard contract price increases (or the inclusion of new generation products/equipment/services at higher prices) can be made at any time. These requests will again be evaluated by NJPA based on the best interests of NJPA and NJPA Members. As an example, typically

acceptable requests for price increases for existing equipment/products and services may cite increases to the Vendor of input costs such as petroleum or other applicable commodities. Typically acceptable requests for price increases for new equipment/products and services enhance or improve on the current solutions currently offered as well as cite increases in utility of the new compared to the old. Vendors are requested to reasonably document the claims cited in their requests. Your written request for a price increase, therefore, is an exercise in describing what you need, and a justification for why you need it in sufficient detail for NJPA to deem such change to be in the best interests of ourselves and our Members.

4.40 Price Change Request Format: An awarded Proposer will use the format of a NJPA Vendor Price and Product Change Request Form to request price increases in general terms (a 5% increase in product line X) and stating their justification for that price increase (due to the recent increase in petroleum or raw material costs) by product category. Specific details for the requested price change must be attached to the request letter identifying product/services where appropriate, both current and proposed pricing. Attachments such as letters from suppliers announcing price increases are appropriate for documenting your requests here.

K. PRICE AND PRODUCT CHANGES FORMAT

4.41 All price and product change requests must be submitted using the **NJPA VENDOR PRICE AND PRODUCT CHANGE REQUEST FORM** found at the very end of this solicitation. NJPA's due diligence regarding product and price change requests is to consider the reasonableness of the request and document consideration on behalf of our members. Submit the following documentation to request a pricing change:

4.41.1 An excel spreadsheet identifying all equipment/products and services being offered and their pricing. Each subsequent pricing update will be saved using the naming convention of "(Vendor Name) pricing effective XX/XX/XXXX."

a. Include all equipment/products and services regardless of whether their prices have changed. By observing this convention we will:

i. Reduce confusion by providing a single, easy to find, current pricing sheet for each Vendor.

ii. Create a historical record of pricing."

L. SINGLE STATEMENT OF PRICING/HISTORICAL RECORD OF PRICING

4.42 Initially; and again with each request for product addition, deletion, and/or pricing change; you must state all pricing for all equipment/products and services available. The request for price changes described above will serve as the documentation for those requested changes. Each complete pricing list will be identified by its "Effective Date." Each successive price listing identified by its "Effective Date" will create a "Product and Price History" for the Contract.

4.43 Proposers may use the multiple tabs available in an Excel workbook to separately list logical product groupings or to separately list product and service pricing as they see fit.

4.44 All equipment/products and services together with their pricing, whether changed within the request or remaining unchanged, will be stated on each "Pricing" sheet created as a result of each request for product, service, or pricing change.

4.45 Each subsequent "Single Statement of Product and Pricing" will be archived by its effective date therefore creating a product and price history for any Contract resulting from this RFP. Proposers are required to create a historical record of pricing annually by submitting updated pricing referred to as a "Single Statement of Product/Equipment and Related Services Contract Price Update". This pricing update is required at a minimum of once per contract year.

M. PAYMENT TERMS

4.46 Payment terms will be defined by the Proposer in the Proposer's Response. Proposers are encouraged to offer payment terms through P Card services if applicable to the customary method of procurement relating to the contracted product/equipment and related services.

4.47 Leasing- If available, identify any leasing programs available to NJPA and NJPA Members as part of your proposal. Proposers should submit an example of the lease agreement to be used. Proposers should identify:

- General leasing terms such as:
  - The percentage adjustment over/under an index rate used in calculating the internal rate of return for the lease; and
  - The index rate being adjusted; and
  - The "Purchase Option" at lease maturity ($1, or fair market value); and
  - The available term in months of lease(s) available.
- Leasing company information such as:
  - The name and address of the leasing company; and
  - Any ownership, common ownership, or control between the Proposer and the Leasing Company.

N. SALES TAX

4.48 Sales and other taxes, where applicable, shall not be included in the prices quoted. Vendor will charge state and local sales and other taxes on items for which a valid tax exemption certification has not been provided. Each NJPA Member is responsible for providing verification of tax exempt status to Vendor. When ordering, if applicable, NJPA Members must indicate that they are tax exempt entities. Except as set forth herein, no party shall be responsible for taxes imposed on another party as a result of or arising from the transactions contemplated by a Contract resulting from this RFP.

O. SHIPPING AND SHIPPING PROGRAM

4.49 Shipping program for material only proposals, or sections of proposals, must be defined as a part of the cost of product/equipment. If shipping is charged to NJPA or NJPA Member, only the actual cost of delivery may be added to an invoice. Shipping charges calculated as a percentage of the product price may not be used, unless such charges are lower than actual delivery charges. No COD orders will be accepted. It is desired that delivery be made within ninety-days (90) of receipt of the Purchase Order. See "The Total Cost of Acquisition" for the equipment/products and related services.

4.50 Any shipping cost charged to NJPA or NJPA Members will be considered to be part of "proposal pricing."

4.51 Additional costs for expedited deliveries will be at the additional shipping or handling expense to the NJPA Member.

4.52 Selection of a carrier for shipment will be the option of the party paying for said shipping. Use of another carrier will be at the expense of the requester.

4.53 Proposers must define their shipping programs for Alaska and Hawaii and any location not served by conventional shipping services. Over-size and over-weight items and shipments may be subject to custom freight programs.

4.54 Proposals containing restocking fees are less advantageous than those not containing re-stocking fees. That being said, certain industries cannot avoid restocking fees. Certain industries providing made to order product/equipment may not allow returns. With regard to returns and restocking fees, Proposers will be evaluated based on the relative flexibility extended to NJPA and NJPA Members relating to those subjects. Where used, restocking fees in excess of 15% will be considered excessive. Restocking fees may

be waived, at the option of the Proposer/Vendor. Indicate all shipping and re-stocking fees in price program.

4.55 Proposer agrees shipping errors will be at the expense of the Vendor. For example, if a Vendor ships a product that was not ordered by the member, it is the responsibility of the Vendor to pay for return mail or shipment at the convenience of the member.

4.56 Unless specifically stated otherwise in the "Shipping Program" of a Proposer's Response, all prices quoted must be F.O.B. destination with the freight prepaid by the Vendor. Delivery effectiveness is very important aspect of this Contract. If completed deliveries are not made at the time agreed, NJPA or NJPA Member reserves the right to cancel and purchase elsewhere and hold Vendor accountable. If delivery dates cannot be met, Vendor agrees to advise NJPA or NJPA Member of the earliest possible shipping date for acceptance by NJPA or NJPA Member.

4.57 Delivered products/equipment must be properly packaged. Damaged products/equipment will not be accepted, or if the damage is not readily apparent at the time of delivery, the products/equipment product/equipment shall be returned at no cost to NJPA or NJPA Member. NJPA and NJPA Members reserve the right to inspect the product/equipment at a reasonable time subsequent to delivery where circumstances or conditions prevent effective inspection of the product/equipment at the time of delivery.

4.58 Vendor shall deliver Contract conforming products/equipment in each shipment and may not substitute products/equipment without approval from NJPA Member.

4.59 NJPA reserves the right to declare a breach of Contract if the Vendor intentionally delivers substandard or inferior products/equipment which are not under Contract and described in its paper or electronic price lists or sourced upon request to any member under this Contract. In the event of the delivery of a non-conforming product/equipment, NJPA Member will immediately notify Vendor and the Vendor will replace non-conforming product/equipment with conforming product/equipment acceptable to the NJPA member.

4.60 Throughout the term of the Contract, Proposer agrees to pay for return shipment on product/equipment that arrives in a defective or inoperable condition. Proposer must arrange for the return shipment of damaged product/equipment.

4.61 Unless contrary to other parts of this solicitation, if the product/equipment or the tender of delivery fail in any respect to conform to this Contract, the purchasing member may: 1) reject the whole, 2) accept the whole or 3) accept any commercial unit or units and reject the rest.

P. NORMAL WORKING HOURS

4.62 Prices quoted are for equipment/products and services delivered during normal business hours. Normal Business hours will be as specifically defined herein, defined through industry standards OR defined through statement contained in the purchase/work order issued pursuant to a Contract resulting from this RFP.

5. MARKETING PLAN

5.1 Internal Marketing Plan: If you are awarded a contract based on this solicitation, your sales force will be the primary source of the contract success. Your sales force needs to be aware that the value of the contract includes:

- The use of the NJPA Contract will save their customer (NJPA's Member) the time and effort of bringing a new individual Request For Proposal (RFP).
- The use of the NJPA Contract will save you and your sales force the time and effort of responding to individual Request For Proposals (RFPs).

- The use of the NJPA Contract will offer NJPA members the opportunity to have the ability to choose your company's contracted product/equipment and related services.

An award of Contract resulting from this RFP is an opportunity for the awarded Vendor to pursue commerce with, and deliver valued contracted products/equipment and related service solutions to NJPA and NJPA Members nationwide. Your internal marketing plan should serve to:

5.1.1 Identify the appropriate levels of sales management whom will need to understand the value of, and the internal procedures necessary to deliver your Contract solution to NJPA and NJPA Members through your marketing and sales efforts.

5.1.2 Identify, in general, your national footprint and dedicated feet-on-the-street sales force that will be carrying this Contract message and opportunity in the field to NJPA Members. Outline the sale force network in terms of numbers and geographic location and distribution of the product/equipment and related services. Service may be independent of the sales of the product/ equipment. Demonstrate fully the sales and service capabilities of your company through your response.

5.1.2.1 Identify whether your sales force are employees or independent contractors. Identify whether your dealers are company owned or independently owned.

5.1.3 Identify your plan for delivering training to these individuals.

5.1.3.1 Will you have your sales force or dealer network gathered at national or regional events in the near future? Does you sales force or dealer network have the ability to participate in sales training webinar or webcast events?

5.1.3.2 NJPA is prepared to provide our personnel for sales training and/or on a webinar or webcast or other methodologies to effectively reach the appropriate groups within your sales management, dealer network and sales force.

5.1.4 Sales Management Contract Training.

5.1.4.1 NJPA will commit to providing contract sales training regarding all aspects of communicating the value of the Contract itself, the authority of NJPA to offer the Contract to its Members, the value the Contract delivers to NJPA Members, the scope of NJPA Membership, and the authority of NJPA Members to utilize NJPA procurement contracts.

5.1.4.2 Your Sales Management will be needed to provide training regarding employee compensation and internal procedures when delivering the Contract opportunity, and how this Contract purchasing opportunity relates with other such opportunities available.

5.2 Success in marketing is dependent upon 1) the delivery of value as defined in section 1.4, 2) the delivery of knowledge of the contract and its proper use and utility, and 3) the delivery of the contracted products/equipment and related services and the sales reward which creates a personal commitment to the contract. NJPA desires a marketing plan that:

5.2.1 identifies the value to a member of a delivered a competitively proposed national cooperative procurement contract that reduces the need by both the NJPA Member and the Vendor/Vendor's sales staff of the responsibility to facilitate and responding to multiple and similar individual RFP's;

5.2.2 identifies the appropriate Vendor personnel from both management and sales staff who will be trained on the sales and marketing methods, strategy, use and utility of such a contract and a

general schedule of when and how those individuals will be trained; and

5.2.3 identifies in general how the reward system for the marketing, delivery, and service chain of the Vendor will be affected by the implementation of the proposed Contract and how that will be proposed to those individuals in terms of the value created for them and their departments in 5.1.1 above.

5.3 External Marketing Plan: NJPA is seeking the ability to serve all our current and potential members nationwide. The Proposer must demonstrate the ability to both market and service their products/equipment and related services to NJPA current and potential members nationwide. As a part of your Marketing Plan, demonstrate your sales and service network and the capability to staff, communicate and offer the contract opportunity while demonstrating your commitment to serving NJPA and NJPA Members nationwide through the awarded contract.

5.4 The Proposer must exhibit the willingness and ability to develop marketing materials and participate in marketing venues such as:

5.4.1 Printed Marketing Materials. Proposer will initially produce and thereafter maintain full color print advertisements in camera ready electronic format including company logos, identifying the Vendor, the Vendor's general utility for NJPA and NJPA Members, and contact information to be used by NJPA and NJPA Members in a full page, half page, and quarter page formats. These advertisements will be used in the NJPA directory and other marketing publications.

5.4.2 Contract announcements and advertisements. Proposer will identify a marketing plan identifying their anticipated contract announcements, advertisements in industry periodicals, or other direct or indirect marketing activities.

5.4.3 Proposer's Website. Proposer will identify how an Awarded Contract will be displayed on the Proposer's website. An on-line shopping experience for NJPA and NJPA Members is desired when applicable and will be viewed as a value-added attribute to a Proposer's Response.

5.4.4 Trade Shows. Proposer will outline their proposed involvement in the promotion of a Contract resulting from this RFP through applicable trade shows. Proposers are encouraged to identify tradeshows and other appropriate venues for the promotion of any such Contract. Proposers are encouraged to consider participation with NJPA at NJPA embraced national trade shows. Examples of such could include:

NAEP	National Association of Education Procurement
I-ASBO	International Association of School Business Officials
NIGP	National Institute of Government Purchasing

5.5 Proposer must also work in cooperation with NJPA to develop a marketing strategy and provide avenues to equally market and drive sales through the Contract and program to all NJPA Members nationally. Awarded Vendor agrees to actively market in cooperation with NJPA all contracted equipment/products and services to current and potential NJPA Members. NJPA reserves the right to deem a Proposer non-responsive or to waive an award based on an unacceptable marketing plan.

5.6 As a part of this response, submit a complete Marketing Plan on how you would help NJPA roll out this program to current and potential NJPA Members. NJPA requires the Awarded Vendors actively promote the Contract in cooperation with the NJPA. Proposers are advised to consider marketing efforts in the areas of 1) Website Link from Proposer's website to NJPA's website, 2) Attendance and participation with a display booth at national and regional trade shows and meetings when the event is

applicable to the Proposer's customer vertical, and 3) Sales team and sales training programs involving both Proposer's sales management and NJPA staff.

5.7 Facilitating NJPA Membership: Proposer should express their commitment to develop a process to establish membership status of current and potential agencies with NJPA as a part of the sales or customer communication process.

5.7.1 Membership information: Proposer should further express their commitment to capturing sufficient member information as is deemed necessary by NJPA to appropriately facilitate membership.

6. PROPOSAL OPENING PROCEDURE

6.1 Sealed and properly identified Proposer's Responses for this RFP entitled **"SEWER VACUUM, HYDRO-EXCAVATION, AND/OR STREET SWEEPER EQUIPMENT WITH RELATED ACCESSORIES AND SUPPLIES"** will be received by Maureen Knight, Contracts and Compliance Manager, at NJPA Offices, 202 12th Street NE, Staples, MN 56479 until the deadline for receipt of, and proposal opening identified on page one of this RFP**. We document the receipt by using an atomic clock; an NJPA employee electronically time and date stamps all Proposals immediately upon receipt.** The NJPA Director of Contracts and Marketing, or Representative from the NJPA Proposal Evaluation Committee, will then read the Proposer's names aloud. A summary of the responses to this RFP will be made available for public inspection in the NJPA office in Staples, MN. A letter or e-mail request is required to receive a complete RFP package. Send or communicate all requests to the attention of Maureen Knight 202 12th Street Northeast Staples, MN 56479 or RFP@njpacoop.org to receive a complete copy of this RFP. Method of delivery needs to be indicated in the request; an email address is required for electronic transmission. Oral, facsimile, telephone or telegraphic Proposal Submissions or requests for this RFP are invalid and will not receive consideration. All Proposal Responses must be submitted in a sealed package. The outside of the package shall plainly identify **"SEWER VACUUM, HYDRO-EXCAVATION, AND/OR STREET SWEEPER EQUIPMENT WITH RELATED ACCESSORIES AND SUPPLIES"** To avoid premature opening, it is the responsibility of the Proposer to label the Proposal Response properly.

7. EVALUATION OF PROPOSALS

A. PROPOSAL EVALUATION PROCESS

7.1 Overall Evaluation (FORM G) - The NJPA Proposal Evaluation Committee will evaluate proposals received based on a 1,000 point evaluation system. The Committee will establish both the evaluation criteria and designate the relative importance of those criteria by assigning possible scores for each category.

7.2 NJPA will use a 1,000 Point Evaluation System to help determine the best overall Proposer(s) selection.

7.3 NJPA shall use a final overall scoring system to include consideration for best price and cost evaluation. The total possible score is 1,000 points. NJPA reserves the right to assign any number of point awards or penalties it considers warranted if a Proposer stipulates exceptions, exclusions, or limitations of liabilities.

7.4 Responses will be evaluated first for responsiveness and thereafter for content. The NJPA Board of Directors will make awards to the selected Proposer(s) based on the recommendations of the Proposal Evaluation Committee.

7.5 To qualify for the final evaluation, a Proposer must have been deemed responsive as a result of the criteria set forth under "Proposer Responsiveness."

7.6 NJPA uses a variety of evaluation methodologies, including but not limited to a cost comparison of specific and deemed to be like equipment/products. These processes establish final points for submitted price levels.

7.7 The procurement activities of the NJPA Proposal Evaluation Committee are limited to document preparation, answering Proposer questions, advertising the solicitation, distribution of this RFP upon request, conducting an evaluation and making recommendation for possible approval to NJPA Board of Directors.

B. PROPOSER RESPONSIVENESS

7.8 Proposer's Response received after the deadline for submission will be invalid and returned to the Potential Proposer unopened.

7.9 An essential part of the proposal evaluation process is an evaluation to qualify the Proposer being considered. All proposals must contain answers or responses to the information requested in the proposal forms. Any Proposer failing to provide the required documentation may be considered non-responsive.

7.10 Deviations or exceptions stipulated in Proposer's Response may result in the proposal being classified as non-responsive.

7.11 To qualify for evaluation, a proposal must have been submitted on time and materially satisfy all mandatory requirements identified in this document. A proposal must reasonably and substantially conform to all the terms and conditions in the solicitation to be considered responsive.

7.12 The Proposal Evaluation Committee shall utilize the evaluation criteria indicated in section 7.14 below. The following items constitute the test for "Level One Responsiveness" and are determined on the proposal opening date. If these are not received your response may be disqualified as non-responsive. Level One Responsiveness includes:

1. The proposal response is received prior to the deadline for submission.
2. The proposal package was properly addressed and identified as a sealed proposal with a specific opening date and time.
3. The proposal response contains the required certificate of liability insurance, pricing document (with apparent discounts), answer to the level of discount (Form P, question 19) and all forms fully completed even if "not applicable" is the answer.
4. The proposal response contains original signed, completed and dated RFP forms C, D, and F hard copy signed signature page only from forms A and P from this RFP and if applicable, all counter signed addenda issued in relation to this RFP.
5. The proposal response contains an electronic copy (CD or flash drive) of the entire response.

7.13 "Level 2" responsiveness is determined through the evaluation of the remaining items listed under Proposal Evaluation Criteria. These items are not arranged in order of importance and each item may encompass multiple areas of information requested. Any questions not answered will result in a loss of points from relevant Form G criteria and may lead to non-award if too many areas are unanswered resulting in the inability for evaluation team to effectively review your response.

C. PROPOSAL EVALUATION CRITERIA

7.14 Reduction of Evaluation Points. The following items will be sufficient cause to reduce evaluation points.

7.14.1 If a manufacturer or supplier chooses not to produce or supply a full selection and representation of product/equipment and related services it has available which fall within the

scope of this RFP, such action will be considered sufficient cause to reduce evaluation points.

7.15 Evaluation Criteria: Evaluation of each Proposer's Response will take into consideration as a minimum response but not necessarily limited to the following:

1. Adherence to all requirements of this RFP as defined by industry standards.
2. Prior knowledge of and experience with a Proposer in terms of past performance and market place success.
3. Capability of meeting or exceeding current and future needs or requirements of NJPA and NJPA Members.
4. Evaluation of Proposer's ability to market to and provide service to all NJPA Members nationally.
5. Financial condition of the Proposer.
6. Nature and extent of company data furnished in Proposer's Response.
7. Quality of products, equipment, and services offered including value added related services.
8. History of member service to NJPA type customers.
9. Overall ability to perform sales, solutions and contract support as submitted.
10. Ability to meet service and warranty needs.
11. History of meeting shipping and delivery expectations of contracted products/ services.
12. Technology advancements and related provisions.
13. Ability to market and promote the Contract within current business practices.
14. Willingness to develop and enter into NJPA Contract and business relations.
15. Favorable bond rating and applicable industry standard licensing ability.
16. Past market place successes and brand recognition.
17. Demonstrated warranty and product/service responsibility.
18. Possesses qualifications as a responding Proposer that meets or exceeds those set within the solicitation.
19. Information from government and education references and past performance information including past agency approval.
20. Demonstrates that they offer the most current industry standard equipment/products and related services and/or services.
21. Demonstrates financial stability as a company and a favorable banking line of credit.
22. Demonstrates their equipment/products and related services proposed meet and/or exceed industry standards accepted by educational or governmental agencies nationally.
23. Demonstrates market place success and their past performance exhibits an acceptable reputation nationally within the government and education market place.
24. Demonstrates that the company possesses the background, knowledge, capacity, and ability to sell, deliver, and support equipment/products and related services offered to government and education and related agencies.
25. Response's conformance to terms and conditions as described in the solicitation, including documentation.
26. Has provided documentation defining, outlining, and describing their concept of a national marketing program they will be implementing to facilitate and coordinate the cooperative activities required by an awarded NJPA Contract.
27. Has provided all of the required and applicable documentation required i.e. insurance certificates, licenses, and/or registration certificates required to do business nationally.
28. Line-Item Pricing, or acceptable pricing model in approved excel format, listing of all of the proposed equipment/products and related services and warranty provisions with their associated units of costs.
29. Hot List Pricing equipment/products and related services in a Line-Item Pricing format (when applicable).
30. Contract Pricing submitted as requested to include selection of products/equipment and related services in a Line-Item Pricing and/or Percentage Discount from a published gov/ed price list or Catalog.

D. OTHER CONSIDERATION

7.16 Consideration will be given in the award based on the completion and degree of information provided regarding available products/equipment, and accessories, and related services as well as, applicable parts of the Proposer Information and Questionnaire.

7.17 The Proposer is required to have extensive knowledge and at least three (3) years of experience with the related activities surrounding the selling of the product/equipment, related services or related products/equipment offered.

7.18 NJPA reserves the right to accept or reject newly formed companies solely based on information provided in the proposal and/or its own investigation of the company.

7.19 The fact a manufacturer or supplier chooses not to produce or provide equipment products or services to meet the intent and scope of this RFP will not be considered sufficient cause to adjudge this RFP as restrictive.

7.20 Consideration will be given in the proposal evaluation based upon the selection, variety, technological advances, and demonstrated quality of products submitted, technological advances, and pricing. A positive review will reflect the ability of the Proposer to communicate the value of these factors and to demonstrate how the depth and breadth of their product and service offerings provide NJPA and NJPA Members comfort and assurance understanding that the proposer accepts the sole source of responsibility of the response to the scope of this RFP.

7.21 Consideration will also be given to proposals demonstrating technological advances, provide increased efficiencies, expanded service and other related improvements beyond today's NJPA member's needs and applicable standards.

7.22 Strong consideration will be given to a Proposer's past performance, distribution model, and the demonstration their ability to effectively market and service NJPA Membership nationally.

7.23 Strong consideration will be given to the best price as it relates to the quality of the product and service. However, price is ultimately only one of the factors taken into consideration in the evaluation and award.

7.24 The Proposer's ability to follow the proposal preparation instructions set forth in this solicitation will also be considered to be an indicator of the Proposer's ability to follow other future instructions should they receive an award as a result of this solicitation. Any Contract between NJPA and a Proposer requires the delivery of information and data. The quality of organization and writing reflected in the proposal will be considered an indication of the quality of organization and writing which would be prevalent if a Contract was awarded. As a result, the proposal will be evaluated as a sample of data submission.

7.25 Proposer's financial strength and stability is requested and reviewed to get a general feel for the size, strength, and probable scope of the Proposer.

7.26 NJPA reserves the right to reject the Proposer's Response of the apparent successful Proposer where the available evidence or information does not exhibit the ability or intent to satisfy NJPA that the potential Vendor is unable to properly carry out the terms of this RFP and potential Contract.

7.27 NJPA shall reserve the right to reject any or all proposals. NJPA also reserves the right to reject a proposal not accompanied by required certificate of insurance, other data required by this RFP, or if a Proposer's Response is incomplete or irregular. The NJPA shall reject all proposals where there has been proven or suspicion of collusion among the Proposers.

E. COST COMPARISON

7.28 NJPA reserves the right to use this process in the event the Proposal Evaluation Committee feels it is necessary to make a final determination.

7.29 This process will be based on a point system with points being awarded for being low to high Proposer for each cost evaluation item selected. A "Market Basket" of identical (or substantially similar) equipment/products and related services may be selected by the NJPA Evaluation Committee and the unit cost will be used as a basis for determining the point value. The "Market Basket" will be selected by NJPA from all product categories as determined appropriate by NJPA. The low priced Proposer will receive the full point value and all other Proposers will receive points as follows: Lowest price Proposal = 5 (where there are five proposers), and inferior proposals = 4, 3, 2, 1 points each. The Total Score for each proposer will be the sum of all points earned. The result of this process shall not be the sole determination for award.

F. PRODUCT TESTING

7.30 NJPA reserves the right to request and test equipment/products and related services from the apparent successful Proposer. Prior to the award of the Contract, the apparent successful Proposer, if requested by NJPA, shall furnish current information and data regarding the Proposer's resources, personnel, and organization within three (3) days.

G. PAST PERFORMANCE INFORMATION

7.31 Past performance information is relevant information regarding a Proposer's actions under previously awarded contracts to schools, local, state, and governmental agencies and non-profit agencies. It includes the Proposer's record of conforming to specifications and standards of good workmanship. The Proposer's history for reasonable and cooperative behavior and commitment to member satisfaction shall be under evaluation. Ultimately, Past Performance Information can be defined as the Proposer's businesslike concern for the interests of the NJPA Member.

H. WAIVER OF FORMALITIES

7.32 NJPA reserves the right to waive any minor formalities or irregularities in any proposal and to accept proposals, which, in its discretion and according to the law, may be in the best interest of its members.

8. POST AWARD OPERATING ISSUES

A. SUBSEQUENT AGREEMENTS

8.1 Purchase Order- Purchase Orders for product/equipment and related services may be executed between NJPA or NJPA Members (Purchaser) and awarded Vendor(s) or Vendor's sub-contractors pursuant to this invitation and any resulting Contract. NJPA Members are instructed to identify on the face of such Purchase orders that "This purchase order is issued pursuant to NJPA procurement contract #XXXXXX." A Purchase Order is an offer to purchase product/equipment and related services at specified prices by NJPA or NJPA Members pursuant to a Contract resulting from this RFP. Purchase Order flow and procedure will be developed jointly between NJPA and an Awarded Vendor after an award is made.

8.2 Governing Law- Purchase Orders, as identified above, shall be construed in accordance with, and governed by, the laws of a competent jurisdiction with respect to the purchaser. Each and every provision of law and clause required by law to be included in the Purchase Order shall be read and enforced as though it were included. If through mistake or otherwise any such provision is not included, or is not currently included, then upon application of either part the Contract shall be physically amended to make such inclusion or correction. The venue for any litigation arising out of disputes related to Purchase

Order(s) shall be a court of competent jurisdiction to the Purchaser.

8.3 Additional Terms and Conditions- Additional terms and conditions to a Purchase Order may be proposed by NJPA, NJPA Members, or Vendors. Acceptance of these additional terms and conditions is OPTIONAL to all parties to the Purchase Order. The purpose of these additional terms and conditions is to, among other things; formally introduce job or industry specific requirements of law such as prevailing wage legislation. Additional terms and conditions can include specific local policy requirements and standard business practices of the issuing Member. Said additional terms and conditions shall not interfere with the general purpose, intent or currently established terms and conditions contain in this RFP document.

8.4 Specialized Service Requirements- In the event service requirements or specialized performance requirements such as e-commerce specifications, specialized delivery requirements, or other specifications and requirements not addressed in the Contract resulting from this RFP, NJPA Member and Vendor may enter into a separate, standalone agreement, apart from a Contract resulting from this RFP. Any proposed service requirements or specialized performance requirements require pre-approval by Vendor. Any separate agreement developed to address these specialized service or performance requirements is exclusively between the NJPA Member and Vendor. NJPA, its agents, Members and employees shall not be made party to any claim for breach of such agreement. Product sourcing is not considered a service. NJPA Members will need to conduct procurements for any specialized services not identified as a part or within the scope of the awarded Contract.

8.5 Performance Bond- At the request of the member, a Vendor will provide all performance bonds typically and customarily required in their industry. These bonds will be issued pursuant to the requirements of Purchase Orders for product/equipment and related services. If a purchase order is cancelled for lack of a required performance bond by the member agency, it shall be the recommendation of NJPA that the current pending Purchase Order be canceled. Each member has the final decision on Purchase Order continuation. ANY PERFORMANCE BONDING REQUIRED BY THE MEMBER OR CUSTOMER STATE LAWS OR LOCAL POLICY IS TO BE MUTUALLY AGREED UPON AND SECURED BETWEEN THE VENDOR AND THE CUSTOMER/MEMBER.

B. NJPA MEMBER SIGN-UP PROCEDURE

8.6 Awarded Vendors will be responsible for familiarizing their sales and service forces with the various forms of NJPA Membership documentation and shall encourage and assist potential Members in establishing Membership with NJPA. NJPA membership is at no cost, obligation or liability to the member or the vendor.

C. REPORTING OF SALE ACTIVITY

8.7 A report of the total gross dollar volume of all equipment/products and related services purchased by NJPA Members as it applies to this RFP and Contract will be provided quarterly to NJPA. The form and content of this reporting will be developed by NJPA in cooperation with the Vendor to include, but not limited to, name and address of purchasing agency, amount of purchase, and a description of the items purchased.

8.7.1 Zero sales reports: Awarded Vendors are responsible for providing a quarterly sales report of contract sales EVERY QUARTER regardless of the existence or amount of sales.

D. AUDITS

8.8 During the Term, however no more than once per calendar year, Vendor(s) may be required to make available to NJPA at the Vendor's corporate offices (during normal business hours) the invoice reports and/or invoice documents from Vendor pertaining to all invoices sent by Vendor and all payments made by NJPA members for all equipment/products and related services purchased under the awarded Contract.

NJPA must provide written notice of exercise of this requirement with no less than fourteen (14) business days' notice. NJPA may employ an independent auditor or NJPA may choose to conduct such audit on its own behalf. Vendor shall have the right to approve the independent auditor, which approval shall not be unreasonably withheld. Upon approval and after the auditor has executed an appropriate confidentiality agreement, Vendor will permit the auditor to review the relevant Vendor documents. NJPA shall be responsible for paying the auditor's fees. The parties will make every reasonable effort to fairly and equitably resolve discrepancies to the satisfaction of both parties. Vendor agrees that the NJPA may audit their records with a reasonable notice to establish total compliance and to verify prices charged hereunder of the Contract are being met. Vendor agrees to provide verifiable documentation and tracking in a timely manner.

E. HUB PARTNER

8.9 Hub Partner: Where applicable, NJPA Members may, from time to time, request to be served in some way through a "Hub Partner" for the purposes of complying with a Law, Regulation, or Rule to which that individual NJPA Member deems to be applicable in their jurisdiction. Hub Partners may bring value to the proposed transactions through consultancy, Disadvantaged Business Entity Credits, or other considerations.

8.10 Hub Partner Fees: Fees, costs, or expenses from this Hub Partner levied upon a transaction resulting from this contract, shall be payable by the NJPA Member provide that:

8.10.1 The fees, costs, or expenses levied by the Hub Vendor must be clearly itemized in the transaction; and
8.10.2 To the extent that the Vendor stands in the chain of title during a transaction resulting from this RFP, the documentation shall be documented to show it is "Executed for the Benefit of [NJPA Member Name]."

F. TRADE-INS

8.11 Where Appropriate, the value in US Dollars for Trade-ins will be negotiated between NJPA or an NJPA Member, and an Awarded Vendor. That identified "Trade-In" value shall be credited in full against the NJPA purchase price identified in a purchase order issued pursuant to any Awarded NJPA procurement contract. The full value of the trade-in will be consideration to that purchase order.

G. OUT OF STOCK NOTIFICATION

8.12 Vendor shall immediately notify NJPA members upon receipt of order(s) when an out-of-stock occurs. Vendor shall inform the NJPA member regarding the anticipated date of availability for the out-of-stock item(s), and may suggest equivalent substitute(s).

- The ordering organization shall have the option of accepting the suggested equivalent substitute, or canceling the item from the order.
- Under no circumstance is Proposer permitted to make unauthorized substitutions.
- Unfilled or substituted item(s) shall be indicated on the packing list.

H. TERMINATION OF CONTRACT RESULTING FROM THIS RFP

8.13 NJPA reserves the right to cancel the whole or any part of a resulting Contract due to failure by the Vendor to carry out any obligation, term or condition as described in the below procedure. Prior to any termination for cause, the NJPA will provide written notice to the Vendor, opportunity to respond and opportunity to cure according to the steps in the procedure in this Cancellation Section. Some examples of material breach are the following:

- The Vendor provides products/equipment or related services that does not meet reasonable quality standards and is not remedied under the warranty;

- The Vendor fails to ship the products/equipment or related services or provide the delivery and services within a reasonable amount of time;
- NJPA has reason to believe the Vendor will not or cannot perform to the requirements or expectations of the Contract and issues a request for assurance as described herein and Vendor fails to respond;
- The Vendor fails to observe any of the material terms and conditions of the Contract;
- The Vendor fails to follow the established procedure for purchase orders, invoices and/or receipt of funds as established by the NJPA and the Vendor in the Contract.
- The Vendor fails to report quarterly sales;
- The Vendor fails to actively market this Contract within the guidelines provided in this RFP and the expectations of NJPA defined in the NJPA Contract Launch.
- In the event the contract has no measurable and defining value or benefit to NJPA or the NJPA member.

8.14 Each party shall follow the below procedure if the Contract is to be terminated for violations or non-performance issues:

Step 1: Issue a warning letter outlining the violations and/or non-performance and state the length of time (10 days) to provide a response and correct the problem(s) if reasonably possible in such time frame.
Step 2: Issue a letter of intent to cancel Contract, if the problem(s) is not resolved within fifty (50) days.
Step 3: Issue letter to cancel Contract for cause.

8.15 Upon receipt of the written notice of concern, the Vendor shall have ten (10) business days to provide a satisfactory response to the NJPA. Failure on the part of the Vendor to reasonably address all issues of concern may result in Contract cancellation pursuant to this Section.

8.16 Any termination shall have no effect on purchases that are in progress at the time the cancellation is received by the NJPA. The NJPA reserves the right to cancel the Contract immediately for convenience, without penalty or recourse, in the event the Vendor is not responsive concerning the remedy, the performance, or the violation issue within the time frame, completely or in part.

8.17 NJPA reserves the right to cancel or suspend the use of any Contract resulting from this RFP if the Vendor files for bankruptcy protection or is acquired by an independent third party. Awarded Vendor will be responsible for disclosing to NJPA any litigation, bankruptcy or suspensions/disbarments that occur during the contract period. Failure to disclose may result in an immediate termination of the contract. Prior to commencing services under this Contract, the Proposer/Vendor must furnish NJPA certification from insurer(s) proving level of coverage usual and customary to the specific industry. The coverage is to be maintained in full effect during the Contract period. Vendor must be willing to provide, upon request, certification of insurance to any NJPA member or member using this Contract.

8.18 Either party may execute Contract termination without cause with a required 60-day written notice of termination. Termination of Contract shall not relieve either party of financial, product or service obligations incurred or accrued prior to termination.

8.19 NJPA may cancel any Contract resulting from this solicitation without any further obligation if any NJPA employee significantly involved in initiating, negotiating, securing, drafting or creating the Contract on behalf of the NJPA is found to be in collusion with any Proposer to this RFP for their personal gain. Such cancellation shall be effective upon written notice from the NJPA or a later date if so designated in the notice given. A terminated Contract shall not relieve either party of financial, product or service obligations due to participating member or NJPA.

8.20 Events of Automatic termination to include:

- Vendor's failure to remedy a material breach of a Contract resulting from this RFP within sixty (60) days of receipt of notice from NJPA specifying in reasonable detail the nature of such breach; and/or,
- Receipt of written information from any authorized agency finding activities of Vendors engaged in pursuant to a Contract resulting from this RFP to be in violation of the law.

9. GENERAL TERMS AND CONDITIONS

A. ADVERTISEMENT OF RFP

9.1 NJPA shall advertise this solicitation 1) for two consecutive weeks in both the hard copy print and on-line editions of the MINNEAPOLIS STAR TRIBUNE, 2) Once each in Oregon's Daily Journal of Commerce; and Utah's Salt Lake Tribune, and the Desert News 3) it shall be placed on a national wire service and website by the MINNEAPOLIS STAR TRIBUNE, 4) it shall be posted on NJPA's website, 5) it shall be posted to the "Noticetobidders.com" website, and 6) it shall be posted to other third-party websites deemed appropriate by NJPA. Other third party advertisers may include Onvia and Bidsync.

NJPA also notifies and provides solicitation documentation to each State level procurement departments for possible re-posting of the solicitation within their systems and at their option for future use and to meet specific state requirements.

B. ADVERTISING OF A CONTRACT RESULTING FROM THIS RFP

9.2 Proposer/Vendor shall not advertise or publish information concerning this Contract prior to the award being announced by the NJPA. Once the award is made, a Vendor is expected to advertise the awarded Contract to both current and potential NJPA Members.

C. APPLICABLE LAW

9.3 NJPA Compliance with Minnesota Procurement Law: Contracts awarded through NJPA are intended to meet the procurement laws of all states and NJPA will exhaust all avenues to comply with each unique state law or requirement whenever possible. It is the responsibility of each participating NJPA member to ensure to their satisfaction that NJPA contracting process falls within these laws and applicable laws are satisfied. An individual NJPA member using these contracts is deemed by their own accord to be in compliance with their own requirements and procurement regulations.

9.4 Governing Law with respect to delivery and acceptance: All applicable portions of the Minnesota Uniform Commercial Code, all other applicable Minnesota laws, and the applicable laws and rules of delivery and inspection of the Federal Acquisition Regulations (FAR) laws shall govern NJPA contracts resulting from this solicitation.

9.5 Jurisdiction: Any claims pertaining to this RFP and any resulting Contract that develop between NJPA and any other party must be brought forth only in courts in Todd County in the State of Minnesota.

9.5.1 Purchase Orders issued pursuant to a contract resulting from this solicitation shall be construed in accordance with, and governed by, the laws of a competent jurisdiction with respect to the purchaser.

9.6 Vendor Compliance with applicable law: Vendor(s) shall comply with all federal, state, or local laws applicable to or pertaining to the transaction, acquisition, manufacturer, suppliers or the sale of the equipment/products and relating services resulting from this RFP.

9.7 Applicable Laws, whether or not herein contained, shall be included by this reference. It shall be Proposer's/Vendor's responsibility to determine the applicability and requirements of any such laws and

to abide by them.

9.8 Indemnity: Each party agrees it will be responsible for its own acts and the result thereof to the extent authorized by law and shall not be responsible for the acts of the other party and the results thereof. NJPA's liability shall be governed by the provisions of the Minnesota Tort Claims Act, Minnesota Statutes, Section §3.736, and other applicable law.

9.9 Prevailing Wage: It shall be the responsibility of the Vendor to comply, when applicable, with prevailing wage legislation in effect in the jurisdiction of the purchaser (NJPA or NJPA Member). It shall be the responsibility of the Vendor to monitor the prevailing wage rates as established by the appropriate department of labor for any increase in rates during the term of this Contract and adjust wage rates accordingly.

9.10 Patent and Copyright infringement: If an article sold and delivered to NJPA or NJPA Members hereunder shall be protected by any applicable patent or copyright, the Vendor agrees to indemnify and save harmless NJPA and NJPA Members against any and all suits, claims, judgments, and costs instituted or recovered against it by any person whosoever on account of the use or sale of such articles by NJPA or NJPA Members in violation or right under such patent or copyright.

D. ASSIGNMENT OF CONTRACT

9.11 No right or interest in this Contract shall be assigned or transferred by the Vendor without prior written permission by the NJPA. No delegation of any duty of the Vendor shall be made without prior written permission of the NJPA. The NJPA shall notify the members within fifteen (15) days of receipt of written notice by the Vendor. After issuance the awarded Contract may be reassigned to a comparable and acceptable Vendor at the discretion of NJPA.

9.12 If the original Vendor sells or transfers all assets or the entire portion of the assets used to perform this Contract, a successor in interest must guarantee to perform all obligations under this Contract. NJPA reserves the right to reject the acquiring person or entity as a Vendor. A simple change of name agreement will not change the contractual obligations of the Vendor.

E. LIST OF PROPOSERS

9.13 NJPA will not maintain or communicate to a list of proposers. All interested proposers must respond to the solicitation as a result of NJPA solicitation advertisements indicated. Because of the wide scope of the potential Members and qualified national Vendors, NJPA has determined this to be the best method of fairly soliciting proposals.

F. CAPTIONS, HEADINGS, AND ILLUSTRATIONS

9.14 The captions, illustrations, headings, and subheadings in this solicitation are for convenience and ease of understanding and in no way define or limit the scope or intent of this request.

G. DATA PRACTICES

9.15 All materials submitted in response to this RFP will become property of the NJPA and will become public record in accordance with Minnesota Statutes, section 13.591, after the evaluation process is completed. If the Responder submits information in response to this RFP that it believes to be nonpublic information, as defined by the Minnesota Government Data Practices Act, Minnesota Statute § 13.37, the Responder must:

- make the request within thirty days of award/non-award, and include the appropriate statutory justification. The NJPA Legal Department shall review the statement to determine whether the

information shall be withheld. If the NJPA determines to disclose the information, the Contracts department of the NJPA shall inform the Proposer, in writing, of such determination

- defend any action seeking release of the materials it believes to be nonpublic information, and indemnify and hold harmless the NJPA, its agents and employees, from any judgments or damages awarded against the NJPA in favor of the party requesting the materials, and any and all costs connected with that defense.

This indemnification survives the NJPA's award of a contract. In submitting a response to this RFP, the Responder agrees that this indemnification survives as long as the confidential information are in possession of the NJPA. Proposer can redact additional nonpublic information at any time after the evaluation process if appropriate legal justification is provided.

H. ENTIRE AGREEMENT

9.16 The Contract, as defined herein, shall constitute the entire understanding between the parties to that Contract.

9.17 A Contract resulting from this RFP is formed when the NJPA Board of Directors approves and signs the applicable Contract Award Form document (see Form E).

I. FORCE MAJEURE

9.18 Except for payments of sums due, neither party shall be liable to the other nor deemed in default under this Contract if and to the extent that such party's performance of this Contract is prevented due to force majeure. The term "force majeure" means an occurrence that is beyond the control of the party affected and occurs without its fault or negligence including, but not limited to, the following: acts of God, acts of the public enemy, war, riots, strikes, mobilization, labor disputes, civil disorders, fire, flood, snow, earthquakes, tornadoes or violent wind, tsunamis, wind shears, squalls, Chinooks, blizzards, hail storms, volcanic eruptions, meteor strikes, famine, sink holes, avalanches, lockouts, injunctions-intervention-acts, terrorist events or failures or refusals to act by government authority and/or other similar occurrences where such party is unable to prevent by exercising reasonable diligence. The force majeure shall be deemed to commence when the party declaring force majeure notifies the other party of the existence of the force majeure and shall be deemed to continue as long as the results or effects of the force majeure prevent the party from resuming performance in accordance with a Contract resulting from this RFP. Force majeure shall not include late deliveries of equipment/products and services caused by congestion at a manufacturer's plant or elsewhere, an oversold condition of the market, inefficiencies, or other similar occurrences. If either party is delayed at any time by force majeure, then the delayed party shall notify the other party of such delay within forty-eight (48) hours.

J. GRATUITIES

9.19 NJPA may cancel an awarded Contract by written notice if it is found that gratuities, in the form of entertainment, gifts or otherwise, were offered or given by the Vendor or any agent or representative of the Vendor, to any employee of the NJPA are deemed to be excessive with a view or demonstrated intent toward securing a contract or with respect to the performance of a pending or awarded Contract.

K. HAZARDOUS SUBSTANCES

9.20 Proper and applicable Material Safety Data Sheets (MSDS) that are in full compliance with OSHA's Hazard Communication Standard must be provided by the Vendor to NJPA or NJPA Member at the time of purchase.

L. LEGAL REMEDIES

9.21 All claims and controversies between NJPA and Vendor shall be subject to the laws of the State of Minnesota and are to be resolved in Todd County, Minnesota, the county in which NJPA is located and domiciled.

M. LICENSES

9.22 Proposer shall maintain a current status on all required federal, state, and local licenses, bonds and permits required for the operation of the business that is anticipated to be conducted with NJPA and NJPA members by the Proposer.

9.23 All responding Proposers must be licensed (where required) and have the authority to sell and distribute offered equipment/products and related services to NJPA and NJPA Members nationally. Documentation of required said licenses and authorities, if applicable, is requested to be included in the proposer's response.

N. MATERIAL SUPPLIERS AND SUB-CONTRACTORS

9.24 The awarded Vendor shall be required to supply the names and addresses of sourcing suppliers and sub-contractors as a part of the purchase order when requested by NJPA or the NJPA member.

9.25 Awarded Vendors under this RFP will be the sole source of responsibility for transactions originating that award. The Awarded Vendor is solely responsible for equipment/products and related services and products/equipment and related services provided by third-party sourcing or service providers.

0. NON-WAIVER OF RIGHTS

9.26 No failure of either party to exercise any power given to it hereunder, nor to insistence upon strict compliance by the other party with its obligations hereunder, and no custom or practice of the parties at variance with the terms hereof, nor any payment under a Contract resulting from this RFP shall constitute a waiver of either party's right to demand exact compliance with the terms hereof. Failure by NJPA to take action or assert any right hereunder shall not be deemed as waiver of such right.

P. PROTESTS OF AWARDS MADE

9.27 Protests shall be filed with the NJPA's Executive Director and shall be resolved in accordance with appropriate Minnesota state statutes. Protests will only be accepted from Proposers. A protest must be in writing and filed with NJPA. A protest of an award or proposed award must be filed within ten (10) days after the public notice or announcement of the award. No protest shall lie for a claim that the selected Proposer is not a responsible Proposer. A protest must include:

1. The name, address and telephone number of the protester;
2. The original signature of the protester or its representative (you must document the authority of the Representative);
3. Identification of the solicitation by RFP number;
4. Identification of the statute or procedure that is alleged to have been violated;
5. A precise statement of the relevant facts;
6. Identification of the issues to be resolved;
7. The aggrieved party's argument and supporting documentation;
8. The aggrieved party's statement of potential financial damages;
9. A protest bond in the name of NJPA and in the amount of 10% of the aggrieved party's statement of potential financial damages.

Q. PROVISIONS REQUIRED BY LAW

9.28 Proposer agrees in the performance of a Contract resulting from this RFP, it has complied with or will comply with all applicable statutes, laws, regulations, and orders of the United States and any State thereof.

R. RIGHT TO ASSURANCE

9.29 Whenever one party to the awarded Contract has reason to question the other party's intent to perform, he/she may demand a written assurance of this intent. In the event a demand is made and no written assurance is given, the demanding party may treat this failure as an anticipatory repudiation of the Contract provided, however, in order to be effective, any such demand shall be addressed to the authorized signer for the party from whom the assurance is being sought, and sent via U.S. Postal Service, certified mail, return receipt requested or national overnight delivery service with proof of delivery.

S. SUSPENSION OR DISBARMENT STATUS

9.30 If within the past five (5) years, any firm, business, person or Proposer responding to NJPA solicitation and submitting a proposal has been lawfully terminated, suspended or precluded from participating in any public procurement activity with a federal, state or local government or education agency the Proposer must include a letter with its response setting forth the name and address of the public procurement unit, the effective date of the suspension or debarment, the duration of the suspension or debarment and the relevant circumstances relating to the suspension or debarment. Any failure to supply such a letter or to disclose pertinent information may result in the cancellation of any Contract. By signing the proposal affidavit, the Proposer certifies that no current suspension or debarment exists.

T. AFFIRMATIVE ACTION AND IMMIGRATION STATUS CERTIFICATION

9.32 An Affirmative Action Plan, Certificate of Affirmative Action or other documentation regarding Affirmative Action may be required by certain Members may be required by NJPA or NJPA Members relating to a transaction relating to this RFP. Vendors shall comply with any such requirements or requests.

9.33 Immigration Status Certification may be required by NJPA or NJPA Members relating to a transaction relating to this RFP. Vendors shall comply with any such requirements or requests.

U. SEVERABILITY

9.34 In the event that any of the terms of a Contract resulting from this RFP are in conflict with any rule, law, statutory provision or are otherwise unenforceable under the laws or regulations of any government or subdivision thereof, such terms shall be deemed stricken from an awarded Contract resulting from this RFP, but such invalidity or unenforceability shall not invalidate any of the other terms of an awarded Contract resulting from this RFP.

V. RELATIONSHIP OF PARTIES

9.35 No Contract resulting from this RFP shall be considered a contract of employment. The relationship between NJPA and an Awarded Contractor is one of independent contractors each free to exercise judgment and discretion with regard to the conduct of their respective businesses. The parties do not intend the proposed Contract to create, or is to be construed as creating a partnership, joint venture, master-servant, principal–agent, or any other relationship. Except as provided elsewhere in this RFP, neither party may be held liable for acts of omission or commission of the other party and neither party is authorized or has the power to obligate the other party by contract, agreement, warranty, representation or otherwise in any manner whatsoever except as may be expressly provided herein.

10. FORMS

[THE REST OF THIS PAGE WAS LEFT INTENTIONALLY BLANK. FORMS BEGIN ON NEXT PAGE]

Form A

PROPOSER QUESTIONNAIRE- General Business Information

*(Products, Pricing, Sector Specific, Services, Terms and Warranty are addressed on **Form P**)*

Proposer Name: _____Questionnaire completed by: _____

Please identify the person NJPA should correspond with from now through the Award process:

Name: _____, E-Mail address: _____

Please provide an answer to all questions below and address all requests made in this RFP. Please use the Microsoft Word/Excel document version of this questionnaire to respond to the questions contained herein. Please provide your answer to each question indented below the question. Please supply any applicable supporting information and documentation you feel appropriate in addition to answers entered to the Word document. All information must be typed, organized, and easily understood by evaluators.

Company Information

1) Why did you respond to this RFP?
2) What are your company's expectations in the event of an award?
3) Provide the full legal name, address, tax identifications number, and telephone number for your business.
4) Demonstrate your financial strength and stability.
5) Are you now, or have you ever been the subject of a bankruptcy action? Please explain.
6) Provide a brief history of your company that includes your company's core values and business philosophy.
7) How long has your company been in the "**SEWER VACUUM, HYDRO-EXCAVATION, AND/OR STREET SWEEPER EQUIPMENT WITH RELATED ACCESSORIES AND SUPPLIES",** industry?
8) Is your organization best described as a manufacturer or a distributor/dealer/re-seller for a manufacturer of the products/equipment and related services being proposed?
   a) If the Proposer is best described as a re-seller, manufacturer aggregate, or distributor, please provide evidence of your authorization as a dealer/re-seller/manufacturer aggregate for the manufacturer of the products/equipment and related services you are proposing.
   b) If the Proposer is best described as a manufacturer, please describe your relationship with your sales/service force and/or Dealer Network in delivering the products/equipment and related services proposed.
   c) Are these individuals your employees, or the employees of a third party?
   d) If applicable, is the Dealer Network independent or company owned?
9) Please provide your bond rating, and/or a credit reference from your bank.
10) Provide a detailed explanation outlining the licenses and certifications that are both required to be held, and actually held by your organization in pursuit of the commerce and business contemplated by this RFP.
11) Provide a detailed explanation outlining licenses and certifications both required to be held, and actually held, by third parties and sub-contractors to your organization in pursuit of the commerce contemplated by this RFP. If not applicable, please respond with "Not Applicable."
12) Provide all "Suspension or Disbarment" information as defined and required herein.
13) In addition to the $1.5 million in General Liability and/or in conjunction with umbrella insurance coverage, what level of automobile and workers compensation insurance does your organization currently have? If none, please explain.
14) Within the RFP category there is potential to be several different sub-categories of solutions. What sub category title/s

would best describe your products, services and supplies?

Industry-Marketplace Successes

15) List and document recent industry awards and recognition.
16) Supply three references/testimonials from customers of like status to NJPA Members to include Government and Education agencies. Please include the customer's name, contact, and phone number.
17) Provide names and addresses of the top five (5) government or education agency customers to include the scope of projects, size of transaction, and dollar volumes from the past three (3) fiscal years.
18) What percentages of your current (within the past three (3) fiscal years) national sales are to the government and education verticals? Indicate government and education verticals individually

Proposer's ability to sell and service nationwide

19) Please describe your company sales force in terms of numbers, geographic dispersion, and the proportion of their attention focused on the sale and services of the equipment/products contemplated in this RFP?
20) Please describe your dedicated dealer network and number of individual sales force within your dealer network in terms of numbers, geographic dispersion, and the proportion of their attention focused on the sales distribution and delivery of your equipment/products and related services contemplated in this RFP?
21) Please describe your dedicated company service force or dedicated network in terms of numbers, geographic dispersion, and the proportion of their attention focused on the sale of the equipment/products and related services contemplated in this RFP?
22) Please describe your dedicated dealer service force or network in terms of numbers geographic dispersion, and the proportion of their attention focused on the sale of the equipment/products and related services contemplated in this RFP? Additionally, please describe any applicable road service and do they offer the ability to service customers at the customer's location?
23) Describe in detail your customer service program regarding process and procedure. Please include, where appropriate, response time capabilities and commitments as a part of this RFP response and awarded contract.
24) Identify any geographic areas or NJPA market segments of the United States you will NOT be fully serving through the proposed contract.
25) Identify any of NJPA Member segments or defined NJPA verticals you will NOT be offering and promoting an awarded contract to? (Government, Education, Non-profit)
26) Define any specific requirements or restrictions as it applies to our members located off shores such as Hawaii and Alaska and the US Islands. Address your off shore shipping program on the Pricing form P of this document.

Marketing Plan

27) Describe your contract sales training program to your sales management, dealer network and/or direct sales teams relating to a NJPA awarded contract.
28) Describe how you would market/promote an NJPA Contract nationally to ensure success**.**
29) Describe your marketing material, and overall marketing ability, relating to promoting this type of partnership and contract opportunity. Please send a few representative samples of your marketing materials in electronic format.
30) Describe your use of technology and the internet to provide marketing and ensure national contract awareness.
31) Describe your perception of NJPA's role in marketing the contract and your contracted products/equipment and related services.
32) Describe in detail any unique marketing techniques and methods as a part of your proposal that would separate you from other companies in your industry.
33) Describe your company's Senior Management level commitment with regards to embracement, promoting, supporting and managing a resultant NJPA awarded contract
34) Do you view your products/equipment applicable to an E-procurement ordering process? Yes/ No.
    a) If yes, describe examples of E-procurement system/s or electronic marketplace solutions that your products/equipment was available through. Demonstrate the success of government and educations customers to ordering through E-procurement.
35) Please describe how you will communicate your NJPA pricing and pricing strategy to your sales force nationally?

Other Cooperative Procurement Contracts Held

36) Identify all cooperative contracts hosted by any government or education agency or government or education cooperative or by a third party marketing company, which are marketed in more than one state, held or utilized by the Proposer.
37) What is the annual dollar sales volume generated through each of the contract(s) identified in your answer to the previous question.
38) Identify awarded WSCA or specific state procurement contracts held or utilized by the Proposer with any State of the United States.
39) What is the annual combined dollar sales volume for each of these contracts?
40) Identify any GSA Contracts held or utilized by the Proposer.
41) If you are awarded the NJPA contract, are there any market segments or verticals (e.g., higher education, K-12 local governments, non-profits etc.) or geographical markets where the NJPA contract will not be your primary contract purchasing vehicle? If so, please identify those markets and which cooperative purchasing agreement will be your primary vehicle.
42) If you are awarded the NJPA contract, is it your intention and commitment to lead with your NJPA contract? ____ Yes ____ No Explain and demonstrate your commitment and/or restrictions.
43) Identify a proposed administrative fee payable to NJPA for facilitation, management and promotion of the NJPA contract, should you be awarded. This fee is typically calculated as a percentage of Contract sales and not a line item addition to the customers cost of goods.

Value Added Attributes

44) If applicable, describe any product/equipment training programs available as options for NJPA members. If applicable, do you offer equipment operator training as well as maintenance training? ____ Yes ____ No
45) Is this training standard as a part of a purchase or optional?
46) Describe current technological advances your proposed equipment/products and related services offer.
47) Describe your "Green" program as it relates to your company, your products/equipment, and your recycling program, including a list of all green products accompanied by the certifying agency for each (if applicable).
48) Describe any Women or Minority Business Entity (WMBE) or Small Business Entity (SBE) accreditations and the general minority and small business program of your organization as it relates to a Contract resulting from this RFP.
49) Identify any other unique or custom value added attributes of your company or your products/equipment or related services.
50) Other than what you have already demonstrated or described, what separates your company, your products/equipment and related services from your competition? What makes your proposed solutions unique in your industry as it applies to NJPA members?
51) Identify and describe any service contract options included in the proposal, or offered as a proposed option, for the products/equipment being offered.
52) Identify your ability and willingness to offer an awarded contract to qualifying member agencies in Canada specifically and internationally in general.
53) Describe any unique distribution and/or delivery methods or options offered in your proposal.

(Products, Pricing, Sector Specific, Services, Terms and Warranty are addressed on Form P)

Signature: _____ Date: _____

Form B

PROPOSER INFORMATION

Company Name: _____

Address: _____

City/State/Zip: _____

Phone: _____ Fax: _____

Toll Free Number: _____ E-mail: _____

Web site: _____

Voids sometimes exist between management (those who respond to RFPs) and sales staff (those who contact NJPA Members) that result in communication problems. Due to this fact, provide the names of your key sales people, phone numbers, and geographic territories for which they are responsible

COMPANY PERSONNEL CONTACTS

Authorized Signer for your organization*:

Name: _____

Email: _____Phone: _____

* By executing Form F, the "Proposer's Assurance of Compliance," you are certifying this person identified here has their authorization to sign on behalf of your organization:

Author of your proposal response

Name:_____Title:_____

Email: _____Phone:_____

Your Primary Contact person regarding your proposal:

Name: _____Title:_____

Email: _____Phone:_____

Other important contact information:

Name: _____Title:_____

Email: _____Phone:_____

Name: _____Title:_____

Email: _____Phone:_____

Form C

EXCEPTIONS TO PROPOSAL, TERMS, CONDITIONS AND SOLUTIONS REQUEST

Company Name: _____

Note: **Original must be signed** and inserted in the inside front cover pouch.

Any exceptions to the Terms, Conditions, Specifications, or Proposal Forms contained herein shall be noted in writing and included with the proposal submittal. Proposer acknowledges that the exceptions listed may or may not be accepted by NJPA and may or may not be included in the final contract. NJPA may clarify exceptions listed here and document the results of those clarifications in the appropriate section below.

Section/page	Term, Condition, or Specification	Exception		

Proposer's Signature: _____ **Date:** _____

NJPA's clarification on exception/s listed above:

FORM D

Formal Offering of Proposal
(To be completed Only by Proposer)

SEWER VACUUM, HYDRO-EXCAVATION, AND/OR STREET SWEEPER EQUIPMENT WITH RELATED ACCESSORIES AND SUPPLIES,

In compliance with the Request for proposal (RFP) for "SEWER VACUUM, HYDRO-EXCAVATION, AND/OR STREET SWEEPER EQUIPMENT WITH RELATED ACCESSORIES AND SUPPLIES", the undersigned warrants that I/we have examined this RFP and, being familiar with all of the instructions, terms and conditions, general specifications, expectations, technical specifications, service expectations and any special terms, do hereby propose, fully commit and agree to furnish the defined equipment/products and related services in full compliance with all terms, conditions of this RFP, any applicable amendments of this RFP, and all Proposer's Response documentation. Proposer further understands they accept the full responsibility as the sole source of responsibility of the proposed response herein and that the performance of any sub-contractors employed by the Proposer in fulfillment of this proposal is the sole responsibility of the Proposer.

Company Name: _____ Date: _____

Company Address: _____

City:_____ State: _____ Zip: _____

Contact Person: _____ Title: _____

Authorized Signature (ink only): _____ _____
(Name printed or typed)

Form E

Contract Acceptance and Award

(To be completed only by NJPA)

NJPA _____ _____

_____

Proposer's full legal name

Your proposal is hereby accepted and awarded. As an awarded Proposer, you are now bound to provide the defined product/equipment and services contained in your proposal offering according to all terms, conditions, and pricing set forth in this RFP, any amendments to this RFP, your Response, and any exceptions accepted or rejected by NJPA on Form C.

The effective start date of the Contract will be _____, 20_____ and continue for four years from the board award date. This contract has the consideration of a fifth year renewal option at the discretion of NJPA.

National Joint Powers Alliance® (NJPA)

NJPA Authorized signature: _____ _____

NJPA Executive Director (Name printed or typed)

Awarded this _____ day of_____, 20_____ **NJPA Contract Number # 022014**

NJPA Authorized signature: _____ _____

NJPA Board Member (Name printed or typed)

Executed this _____ day of _____, 20_____ **NJPA Contract Number # 022014**

Proposer hereby accepts contract award including all accepted exceptions and NJPA clarifications identified on FORM C.

Vendor Name _____

Vendor Authorized signature: _____ _____

(Name printed or typed)

Title: _____

Executed this _____ day of _____, 20_____ **NJPA Contract Number # 022014**

Form F

PROPOSER ASSURANCE OF COMPLIANCE

Proposal Affidavit Signature Page

PROPOSER'S AFFIDAVIT

The undersigned, representing the persons, firms and corporations joining in the submission of the foregoing proposal (such persons, firms and corporations hereinafter being referred to as the "Proposer"), being duly sworn on his/her oath, states to the best of his/her belief and knowledge:

1. The undersigned certifies the Proposer is submitting their proposal under their true and correct name, the Proposer has been properly originated and legally exists in good standing in its state of residence, that the Proposer possesses, or will possess prior to the delivery of any product/equipment and related services, all applicable licenses necessary for such delivery to NJPA members agencies nationally, and that they are authorized to act on behalf of, and encumber the "Proposer" in this Contract, and

2. To the best of my knowledge, no Proposer or Potential Proposer, nor any person duly representing the same, has directly or indirectly entered into any agreement or arrangement with any other Proposers, Potential Proposers, any official or employee of the NJPA, or any person, firm or corporation under contract with the NJPA in an effort to influence either the offering or non-offering of certain prices, terms, and conditions relating to this RFP which tends to, or does, lessen or destroy free competition in the letting of the Contract sought for by this RFP, and

3. The Proposer or any person on his/her behalf, has not agreed, connived or colluded to produce a deceptive show of competition in the manner of the proposal or award of the referenced contract, and

4. Neither I, the Proposer, nor, any officer, director, partner, member or associate of the Proposer, nor any of its employees directly involved in obtaining contracts with the NJPA or any subdivision of the NJPA, has been convicted of false pretenses, attempted false pretenses or conspiracy to commit false pretenses, bribery, attempted bribery or conspiracy to bribe under the laws of any state or federal government for acts or omissions after January 1, 1985, and

5. The Proposer has examined and understands the terms, conditions, scope, contract opportunity, specifications request and other documents of this solicitation and that any and all exceptions have been noted in writing and have been included with the proposal submittal, and

6. If awarded a contract, the Proposer will provide the equipment/products and services and/or services to qualifying members of the NJPA in accordance with the terms, conditions, scope of this RFP, Proposer offered specifications and other documents of this solicitation, and

7. The undersigned, being familiar with and understand the expectations requested and outlined in this RFP under consideration, hereby proposes to deliver through valid requests, Purchase Orders or other acceptable forms ordering and procurement by NJPA Members. Unless otherwise indicated, requested and agreed to on a valid purchase order per this RFP, only new, unused and first quality equipment/products and related services are to be transacted with NJPA Members relating to an awarded contract, and

8. The Proposer has carefully checked the accuracy of all proposed products/equipment and related services and listed total price per unit of purchase in this proposal to include shipping and delivery considerations. In addition, the Proposer accepts all general terms and conditions of this RFP, including all responsibilities of commitment as outlined and proposed, and

9. In submitting this proposal, it is understood that the right is reserved by the NJPA to reject any or all proposals

and it is agreed by all parties that this proposal may not be withdrawn during a period of 90 days from the date proposals were opened regarding this RFP, and

10. The Proposer certifies that in performing this Contract they will comply with all applicable provisions of the federal, state, and local laws, regulations, rules, and orders, and

11. The Proposer understands that submitted proposals which are marked "confidential" in their entirety, or those in which a significant portion of the submitted proposal is marked "nonpublic" **will not** be accepted by NJPA. Pursuant to Minnesota Statute §325C.01, subd. 5 and §13.03, subd. 1, only specific parts of the proposal may be labeled a "trade secret". All proposals are nonpublic until the contract is awarded; at which time, both successful and unsuccessful vendors' proposals become public information.

12. The Proposer understands and agrees that NJPA will not be responsible for any information contained within the proposal. Should Vendors not comply with the labeling and packing requirements, proposals will be released as submitted.

13. By signing below, the Proposer understands it is his or her responsibility as the Vendor to act in protection of labeled information and agree to defend and indemnify NJPA for honoring such designation. Proposer duly realizes failure to so act will constitute a complete waiver and all submitted information will become public information; additionally failure to label any information that is released by NJPA shall constitute a complete waiver of any and all claims for damages caused by the release of the information.

[The rest of this page has been left intentionally blank. Signature page below]

By signing below, Proposer is acknowledging that he or she has read, understands and agrees to comply with the terms and conditions specified above.

Company Name: _____

Contact Person for Questions: _____

_____
(Must be individual who is responsible for filling out this Proposer's Response form)

Address: _____

City/State/Zip: _____

Telephone Number: _____ Fax Number: _____

E-mail Address:_____

Authorized Signature: _____

Authorized Name (typed): _____

Title: _____

Date: _____

Notarized

Subscribed and sworn to before me this _____ day of _____, 20_____

Notary Public in and for the County of _____ State of _____

My commission expires: _____

Signature: _____

Form G.

OVERALL EVALUATION AND CRITERIA

For the Proposed Subject "**SEWER VACUUM, HYDRO-EXCAVATION, AND/OR STREET SWEEPER EQUIPMENT WITH RELATED ACCESSORIES AND SUPPLIES"**

Conformance to terms and conditions to include documentation	50	
Pricing	400	
Financial, Industry and Marketplace Successes	75	
Bidder's Ability to Sell and Service Contract Nationally	100	
Bidder's Marketing Plan	50	
Value Added Attributes	75	
Warranty Coverages and Information.	50	
Selection and Variety of Products and Services Offered	200	
Total Points	1000	0

Reviewed by: _____ Its_____

_____ Its_____

Form P

PROPOSER QUESTIONNAIRE
Products/Equipment, Pricing, Sector Specific, Services, Terms and Warranty

Proposer Name: _____

Questionnaire completed by: _____

Payment Terms and Financing Options

1) Identify your payment terms if applicable. (Net 30, etc.)
2) Identify any applicable leasing or other financing options as defined herein.
3) Briefly describe your proposed order process for this proposal and contract award. (Note: order process may be modified or refined during an NJPA member's final Contract phase process).
    a. Please specify if you will be including your dealer network in this proposal. If so, please specify how involved they will be. (For example, will he Dealer accept the P.O.?), and how are we to verify the specific dealer is part of your network?
4) Do you accept the P-card procurement and payment process?

Warranty

5) Describe, in detail, your Manufacture Warranty Program including conditions and requirements to qualify, claims procedure, and overall structure.
6) Do all warranties cover all products/equipment parts and labor?
7) Do warranties impose usage limit restrictions?
8) Do warranties cover the expense of technicians travel time and mileage to perform warranty repairs?
9) Please list any other limitations or circumstances that would not be covered under your warranty.
10) Please list any geographic regions of the United States for which you cannot provide a certified technician to perform warranty repairs. How will NJPA Members in these regions be provided service for warranty repair?

Equipment/Products and Related Services and Pricing

11) Provide a general narrative description of the equipment/products and related services you are offering in your proposal.
12) Provide a general narrative description of your pricing model identifying how the model works (line item and/or published catalog percentage discount).
13) Please quantify the discount range presented in this response pricing as a percentage discount from MSRP/published list.
14) Provide an overall proposed statement of method of pricing for individual line items, percentage discount off published product/equipment catalogs and/or category pricing percentage discount with regard to all equipment/products and related services and being proposed. Provide a SKU number for each item being proposed.
15) Propose a strategy, process, and specific method of facilitating "Sourced Product/Equipment and Related Services" (AKA, "Open Market" items or "Non-Standard Options").
16) Provide your NJPA customer volume rebate programs, as applicable.
17) Identify any Total Cost of Acquisition (as defined herein) cost(s) which is **NOT** included "Pricing" submitted with your proposal response. Identify to whom these charges are payable to and their relationship to Proposer.
18) If freight, delivery or shipping is an additional cost to the NJPA member, describe in detail the complete shipping and delivery program.

19) As an important part of the evaluation of your offer, you must indicate the level of pricing you are offering. Prices offered in this proposal are **(Your proposal will be deemed "Non-Responsive" if this question is not answered):**

_____a. Pricing is the same as typically offered to an individual municipality, Higher ed or school district.

_____b. Pricing is the same as typically offered to GPOs, cooperative procurement organizations or state purchasing departments.

_____c. Better than typically offered to GPOs, cooperative procurement organizations or state purchasing departments.

20) Do you offer quantity or volume discounts? _____ YES _____ NO Outline guidelines and program.

21) Describe in detail your proposed exchange and return program(s) and policy(s).

22) Specifically identify those shipping and delivery and exchange and returns programs as they relate to Alaska and Hawaii and any related off shore delivery of contracted products/ equipment and related services

23) Please describe any self-audit process/program you plan to employ to verify compliance with your anticipated contract with NJPA. Please be as specific as possible.

<u>Industry or Sector Specific Questions</u>

24) NA

Signature: _____Date: _____

11. PRE-SUBMISSION CHECKLIST

Pre-submission Checklist

- ❑ Have you read, and do you understand the intent this RFP?
- ❑ Have you attended the Pre-Proposal Conference for this RFP?
- ❑ Have you completed the questionnaires (Forms A & P) to the best of your ability?
- ❑ Have you submitted pricing for all of the product/equipment and related services you are proposing within the scope of this RFP?
- ❑ Have you packaged your Proposal submission identifying conspicuously "Competitive Proposal Enclosed, Please hold for public opening XX-XX-XXX"?
- ❑ Have you sent your package in sufficient time for physical delivery at 202 12th ST NE Staples, MN 56479 to occur prior to the deadline for delivery?
- ❑ Have you submitted hard copy original signed, completed, and dated forms C, D, E, and hard copy signed signature page only from forms A and P of this RFP?
- ❑ Have you submitted verification of liability insurance with the coverage and limits required in the RFP?
- ❑ If any addendum/s to RFP were issued, have you submitted a signed copy of such addendum/s?
- ❑ Have you provided an electronic copy (saved on a CD or flash drive) of your **entire** proposal including, but not limited to, Forms A, B, C, D, E, F, & P in your proposal?

Contents of your Proposal response:

- ❑ **Hard copy original signed, completed, and dated forms C, D, F, and hard copy signed signature page only from forms A and P.**
- ❑ **Electronic submission of proposal forms A, B, C, D, E, & P (CD or flash drive).**
- ❑ **Certificate of Insurance (demonstration of insurability)**

FORM TITLES

Form A	Proposer Questionnaire – General Business Information
Form B	Proposer Information
Form C	Exceptions to Proposal, Terms, Conditions, and Solutions Request
Form D	Formal Offering of Proposal
Form E	Contract Acceptance and Award
Form F	Proposer Assurance of Compliance
Form G	Overall Evaluation and Criteria
Form P	Proposer Questionnaire – Products/equipment, Pricing, Sector Specific, Services, Terms and Warranty

NJPA VENDOR PRICE AND PRODUCT CHANGE REQUEST FORM

Section 1. Instructions For Vendor

Pursuant to section 4 of the NJPA RFP, requests for equipment/products or service changes, additions or deletions will be allowed at any time throughout the awarded contract term. All requests must be made in written format by completing sections 2, 3 and 4 of the NJPA Price and Product Change Request Form and signature of an authorized Vendor employee in section 5. All changes are subject to review and approval by the NJPA Contracts & Compliance Manager, signed in acceptance by the NJPA Executive Director and acknowledged by the NJPA Contract Council. Submit request via email to your Contract Manager **AND**: **PandP@njpacoop.org.**

NJPA's due diligence in analyzing any request for change is to determine if approval of the request is: 1) within the scope of the original RFP and 2) in the "Best Interests of NJPA and NJPA Members." A signed Price and Product Change form will be returned to vendor contact via email.

Vendor must complete this change request form and individually list or attach all items or services subject to change, provide sufficiently detailed explanation and documentation for the change, and include a compete restatement of pricing document in appropriate format (preferably Excel). The pricing document must identify all equipment/products and services being offered and must conform to the following NJPA product/price change naming convention: (Vendor Name) (NJPA Contract #) (effective pricing date); for example, "COMPANY 012411-CPY eff 02-12-2013."

> *NOTE:* New pricing restatement must include all equipment/products and services offered regardless of whether their prices have changed and include a new "effective date" on the pricing documents. This requirement reduces confusion by providing a single, current pricing sheet for each vendor and creates a historical record of pricing.

ADDITIONS. New equipment/products and related services may be added to a contract if such additions are within the scope of the RFP.

DELETIONS. New equipment/products and related services may be deleted from a contract if an item or service is no longer available and thus not relevant to the contract; for example, discontinued, improved, etc.

PRICE CHANGES: Request prices changes in general terms along with the justification by product category for the change; for example, a 3% increase in XYZ Product Line is due to a 3% increase in petroleum, or this list of SKUs/ product descriptions is increasing X% due to X% increase in cost of raw materials.

> *Price decreases:* NJPA expects Vendors to propose their very best prices and anticipates price reductions are due to advancement of technologies and market place efficiencies.
>
> *Price increases:* Typical acceptable increase requests include increases to Vendor input costs such as petroleum or other applicable commodities, increases in product utility of new compared to old equipment/product or service, etc. Vendor must include reasonable documentation for the claims cited in their request along with detailed justification for why the increase is needed. Special details for price changes must be included with the request along with both current and proposed pricing. Appropriate documentation should be attached to this form, including letters from suppliers announcing price increases.

Refer to section 4 of the RFP for complete "Pricing" details.

Section 2. Vendor Name and Type of Change Request

CHECK ALL CHANGES THAT APPLY:

AWARDED VENDOR NAME: _____

☐ Adding Products/Services

☐ Deleting/Discontinuing Products/services

☐ Price Increase

NJPA VENDOR PRICE AND PRODUCT CHANGE REQUEST FORM

NJPA CONTRACT NUMBER: _____ ☐ Price Decrease

Section 3. Detailed Explanation of Need for Changes

List equipment/products and/or services that are changing, being added or deleted from previous contract price list along with the percentage change for each item or category. (Attach a separate, detailed document if more than 10 items.)

Provide a general statement and documentation explaining the reasons for these price and/or product changes.
SAMPLES: 1-All paper equipment/products and services increased 5% in price due to transportation and fuel costs (see attached documentation of raw materials increase). 2-The 6400 series floor polisher is added to the product list as a new model replacing the 5400 series. The 6400 series 3% increase reflects technological improvements made that improve the rate of efficiency and useful life. The 5400 series is now included in the "Hot List" at a 20% discount from previous pricing until remaining inventory is liquidated.

If adding product/s, provide a general statement how these are in the scope.

If changing prices and/or products, provide a general statement that the pricing is consistent with existing NJPA contract pricing.

Section 4. Complete Restatement of Pricing Submitted

A COMPLETE restatement of the pricing including all new and existing equipment/products and services is attached and/or has been emailed to PandP@njpacoop.org.

☐ Yes ☐ No

Section 5. Signatures

_____ _____
Vendor Authorized Signature Date

_____
Print Name and Title of Authorized Signer

_____ _____
NJPA Executive Director Signature Date

ADDENDUM ONE (1)
To that certain
NJPA RFP #022014
Issued by
National Joint Powers Alliance®
For the procurement of

SEWER VACUUM, HYDRO-EXCAVATION, AND/OR STREET SWEEPER EQUIPMENT WITH RELATED ACCESSORIES AND SUPPLIES

Consider the following to be part of the above titled RFP:

1) **Questions submitted by Potential Responders at the Pre-Proposal Conference on February 6, 2014 are listed in black font and NJPA Answers are listed in blue:**

Q: What percentage of your client base are public works departments versus school systems.
A: Approximately 30% of NJPA's membership is in Government and about 40% of membership is in Education.

Q: How many contracts do you expect to award in this category?
A: Per section 1.13 of the RFP, NJPA's intent is to award a contract to a single exclusive vendor but reserves the right to award to multiple Proposers where the result of the responding Proposers justifies a multiple award and multiple contracts are deemed to be in the best interests of the NJPA member agencies.

Q: Clarify the normal purchase order and payment flow for a manufacturer that utilizes distributors. manufacturer accepts order from distributor, and manufacturer pays admin fee to NJPA quarterly?
A: When a vendor is awarded an NJPA contract all authorized distributors/dealers are able to sell through the contract. The PO would be accepted at the distributor/dealer level and the administrator/manufacturer would be responsible to submit a cumulative sales report to NJPA on a quarterly basis with admin fee payment.

Q: How and where in your point scale will you recognize a successful previous NJPA awarded vendor?
A: Form A questions address this and could be reflected in a number of different criteria including but not limited to: Industry & Marketplace Success and Ability to Sell and Service Nationwide.

ACKNOWLEDGMENT OF ADDENDUM ONE (1) TO RFP DISTRIBUTED VIA EMAIL ON FEBRUARY 6, 2014

COMPANY NAME: _____

SIGNATURE: _____

DATE: _____

Form A

PROPOSER QUESTIONNAIRE- General Business Information

*(Products, Pricing, Sector Specific, Services, Terms and Warranty are addressed on **Form P**)*

Proposer Name: __Federal Signal Corp. (Elgin & Vactor)___Questionnaire completed by: ____David Panizzi_

Please identify the person NJPA should correspond with from now through the Award process:

Name: ___David Panizzi_____, E-Mail address: ____dpanizzi@federalsignal.com_____

Please provide an answer to all questions below and address all requests made in this RFP. Please use the Microsoft Word/Excel document version of this questionnaire to respond to the questions contained herein. Please provide your answer to each question indented below the question. Please supply any applicable supporting information and documentation you feel appropriate in addition to answers entered to the Word document. All information must be typed, organized, and easily understood by evaluators.

Company Information

1) Why did you respond to this RFP?
   We would like to continue the excellent relationship that we have established with NJPA and their Membership.
2) What are your company's expectations in the event of an award?
   We would expect continued cooperation with increased sales to the ever growing NJPA membership.
3) Provide the full legal name, address, tax identifications number, and telephone number for your business.
   TAX ID Number 36-2351764
   Federal Signal Corporation
   1415 W. 22nd Street
   Suite 1100
   Oak Brook, IL 60523
   630-954-2000

4) Demonstrate your financial strength and stability.
   The link shown here will provide the latest quarterly and annual reports. These reports will clearly show Federal Signal's financial strength and stability. http://www.federalsignal.com/AnnualQuarterlyReports_3977.asp
5) Are you now, or have you ever been the subject of a bankruptcy action? Please explain.
   Federal Signal Corporation has never been the subject of a bankruptcy action.
6) Provide a brief history of your company that includes your company's core values and business philosophy.
   Federal Signal Corporation (NYSE: FSS) enhances the safety, security and well being of communities and workplaces around the world. Founded in 1901, Federal Signal is a leading global designer and manufacturer of products and total solutions that serve municipal, governmental, industrial and institutional customers.

   Federal Signal Environmental Solutions Group:
   As we embark on the 21st century, we are faced with many new opportunities and challenges providing the necessary cleaning and maintenance services to our cities, airports and industries in an environmentally friendly manner. With clean air and clean water at the forefront of today's concerns - now is the time to think about how the environmental risks will affect communities, business and government worldwide. To meet these challenges, Federal Signal Corporation has created the **Environmental Solutions Group**.
   This group includes industry leading solutions from **Elgin Sweeper Company and Vactor Manufacturing** each with a large, innovative and productive line of environmental cleaning products. Our mission is to enhance the safety, security and well-being of communities and workplaces around the world.

7) How long has your company been in the **"SEWER VACUUM, HYDRO-EXCAVATION, AND/OR STREET SWEEPER EQUIPMENT WITH RELATED ACCESSORIES AND SUPPLIES"**, industry?

Elgin Sweeper Company has been cleaning roadways since 1914 – picking up and disposing of harmful debris before it contaminates surface runoff and accumulates into roadside pollution. Today Elgin is the leading manufacturer of sweepers for municipal, contractor, airport and industrial sweeping needs. Elgin Sweeper offers the world's broadest selection of street sweepers and includes all variations of today's sweeping technology – mechanical, vacuum, regenerative air, and now waterless dust control, PM10-compliance, and alternatively fueled sweepers. Elgin Sweeper is leading the way for testing sweeper effectiveness and for BMP qualification. From general street maintenance to special industrial and airport applications, Elgin puts its customers in the sweeper that best meets their needs.

Vactor Manufacturing, located in Streator, IL, is a world leader in high quality sewer cleaning and Hydro excavation solutions. For 50 years Vactor has been advancing their expertise in air conveyance and high pressure water. Starting with agricultural conveyor products that led to engineering and manufacturing quality products for sewer cleaning, line jetting, vacuum excavating and hydro excavating. Vactor products feature a unique design and Vactor's exclusive Jet Rodder water pump, designed for the most efficient use of water. Vactor Manufacturing is ISO9001 and ISO14001 certified and takes pride in enhancing the well being of workplaces and communities around the world.

8) Is your organization best described as a manufacturer or a distributor/dealer/re-seller for a manufacturer of the products/equipment and related services being proposed?
Elgin Sweeper and Vactor Manufacturing are best described as manufacturers.
   a) If the Proposer is best described as a re-seller, manufacturer aggregate, or distributor, please provide evidence of your authorization as a dealer/re-seller/manufacturer aggregate for the manufacturer of the products/equipment and related services you are proposing.
   b) If the Proposer is best described as a manufacturer, please describe your relationship with your sales/service force and/or Dealer Network in delivering the products/equipment and related services proposed.
   Both Elgin and Vactor products are sold and serviced through a network of more than 100 factory trained dealer locations worldwide.
   Are these individuals your employees, or the employees of a third party?
   The dealer network is a third party and their employees are of a third party.
   c) If applicable, is the Dealer Network independent or company owned?
   The Dealer Network is independently owned.

9) Please provide your bond rating, and/or a credit reference from your bank.

Wells Fargo Bank, N.A.
MAC D1109-019
1525 WT Harris Blvd. 1A1
Charlotte, NC 28262
Latocia Attidzah, Dealer Administrator, ellissia.attidzah@wellsfargo.com, 704-590-2755
Chanue Bynes, Dealer Administrator, chanue.bynes@wellsfargo.com, 704-590-2735
Group mailbox: agencyservices.requests@wellsfargo.com

10) Provide a detailed explanation outlining the licenses and certifications that are both required to be held, and actually held by your organization in pursuit of the commerce and business contemplated by this RFP.
While not required both Elgin and Vactor Facilities are ISO 9001 certified. This means that we adhere to appropriate manufacturing and quality processes and procedures.

11) Provide a detailed explanation outlining licenses and certifications both required to be held and actually held by third parties and sub-contractors to your organization in pursuit of the commerce contemplated by this RFP. If not applicable, please respond with "Not Applicable."
Many States require sellers/services of our products to maintain State or local level business licenses. Where required our third party dealers hold applicable business licenses.

12) Provide all "Suspension or Disbarment" information as defined and required herein.
None

13) In addition to the $1.5 million in General Liability and/or in conjunction with umbrella insurance coverage, what level of automobile and workers compensation insurance does your organization currently have? If none, please explain.
Please see attached certificate of liability insurance describing our automobile liability and workman's compensation.

14) Within the RFP category there is potential to be several different sub-categories of solutions. What sub category title/s would best describe your products, services and supplies?
The only Sub Category that would apply would be High Pressure Sewer Cleaner.

Industry-Marketplace Successes

15) List and document recent industry awards and recognition.
Not applicable.

16) Supply three references/testimonials from customers of like status to NJPA Members to include Government and Education agencies. Please include the customer's name, contact, and phone number.
Brigham Young University
Scott Sherwood
801-422-5412

Midvale City, Utah
Ken Vance
801-256-2575

Lehi City, Utah
Jeremy Estes
801-341-9198

17) Provide names and addresses of the top five (5) government or education agency customers to include the scope of projects, size of transaction, and dollar volumes from the past three (3) fiscal years.
Confidential

18) What percentages of your current (within the past three (3) fiscal years) national sales are to the government and education verticals? Indicate government and education verticals individually.
Confidential

Proposer's ability to sell and service nationwide

19) Please describe your company sales force in terms of numbers, geographic dispersion, and the proportion of their attention focused on the sale and services of the equipment/products contemplated in this RFP?
Environmental Solutions Group (ESG) North American Sales division consists of a Director of Sales with eight Regional Sales Managers (RSM) reporting to him. 100 % of their time id dedicated to the sales and dealer support of Elgin and Vactor equipment.

20) Please describe your dedicated dealer network and number of individual sales force within your dealer network in terms of numbers, geographic dispersion, and the proportion of their attention focused on the sales distribution and delivery of your equipment/products and related services contemplated in this RFP?
Each RSM has a Dealer network within their respective territory that is managed by the RSM. As previously stated, the Dealer network is a third party with approximately 50 dealer locations and well over 200 dealer sales personnel covering all of North America.

21) Please describe your dedicated company service force or dedicated network in terms of numbers, geographic dispersion, and the proportion of their attention focused on the sale of the equipment/products and related services contemplated in this RFP?

ESG Service division consists of a VP of Parts and Service with 5 Regional Operations and Service Managers (ROSM) reporting through a field parts and service manager. This covers all of North America and many countries throughout the developed world.

22) Please describe your dedicated dealer service force or network in terms of numbers geographic dispersion, and the proportion of their attention focused on the sale of the equipment/products and related services contemplated in this RFP? Additionally, please describe any applicable road service and do they offer the ability to service customers at the customer's location?

ESG dealers have factory trained service technicians fully trained to service Elgin and Vactor products. 100 % of North American ESG dealers have the ability to provide some level of road service for ESG Equipment. ESG dealers attention to Elgin and Vactor products will vary from 50 -100 % depending on dealership.

23) Describe in detail your customer service program regarding process and procedure. Please include, where appropriate, response time capabilities and commitments as a part of this RFP response and awarded contract.

Any sale or servicing of equipment to the NJPA member will be conducted through our dealer network. All paperwork (i.e. Purchase Orders, Warranty Claims, etc) will be submitted by the NJPA member to the ESG Dealer. The ESG Dealer network is a well established group of first class organizations having a vast array of knowledge and experience in the municipal equipment market. Elgin and Vactor Service Department maintain a 24 hour a day service support line as an additional resource for dealer or customer issues.

24) Identify any geographic areas or NJPA market segments of the United States you will NOT be fully serving through the proposed contract.

All US Market segments will be fully served.

25) Identify any of NJPA Member segments or defined NJPA verticals you will NOT be offering and promoting an awarded contract to? (Government, Education, Non-profit)

Elgin and Vactor products will be made available to all NJPA member segments. Promotion to non-profit organizations is limited as this market segment typically does not have a need for Elgin or Vactor Products.

26) Define any specific requirements or restrictions as it applies to our members located off shores such as Hawaii and Alaska and the US Islands. Address your off shore shipping program on the Pricing form P of this document.

No Restrictions

Marketing Plan

27) Describe your contract sales training program to your sales management, dealer network and/or direct sales teams relating to a NJPA awarded contract.

ESG'S four year relationship with NJPA has provided a solid base of knowledge from both sales management and dealer network with regard to use of the contract for ongoing sales. NJPA contract training at both national and local sales meetings is ongoing (performed as required by our RSMs). This has also been facilitated by presentations from our NJPA contract manager and managers from within the company.

28) Describe how you would market/promote an NJPA Contract nationally to ensure success.

ESG has annual Sales Meetings for our dealer network. As in the past, we would welcome an NJPA representative to attend and present at our annual dealer sales meetings (Tony is already scheduled for our annual meeting this year in June) . Our dealers and regional sales managers attend local NJPA GTKU events. In addition, we have a section for the NJPA program on both dealer and public websites. We also advertise our NJPA contract at national (and local) trade shows.

29) Describe your marketing material, and overall marketing ability, relating to promoting this type of partnership and contract opportunity. Please send a few representative samples of your marketing materials in electronic format.

ESG marketing literature is currently available on the dealer and public websites for NJPA members to download electronic copies. We also participate in and will continue to participate in, a very active PR program, do direct mailings, attend tradeshows, write and publish application stories – all of the traditional Marketing Communication tactics that are being applied to promoting this program will continue. This is facilitated through our full service Marketing Communications Department.

30) Describe your use of technology and the internet to provide marketing and ensure national contract awareness.

Elgin Sweeper Company and Vactor Manufacturing have embraced the use of technology in five primary ways that would impact marketing and product awareness:

1. Public Websites – we employ a webmaster and staff that makes updating and improving the public websites a priority –our current NJPA relationship is reflected on these website.
2. Dealer Website – we have a secure dealer website that is constantly updated with new program, promotional and product information that is relevant – all programs, including our current NJPA purchasing contract is listed on that website complete with appropriate link.
3. ESGU – we have an on-line "University" training curriculum and system that allow us to produce on-line classes and learning modules, hold meetings, and collaborate. These training classes can be accessed at a users location and provide real-time essential training and information.
4. E-Newsletter – ESG has a monthly newsletter that updates our dealers with new information they should be aware of, including marketing updates, training information, and any other pertinent sales or service information.
5. Product Sales Configurator – both Elgin and Vactor will have an on-line configurator available to the dealers to build customer products for presentation and proposals as well as eventual order entry and production planning. Ability to provide NJPA proposals for our equipment is/will be available.

31) Describe your perception of NJPA's role in marketing the contract and your contracted products/equipment and related services.

We would expect NJPA to support the Elgin and Vactor product line and supply us with information and materials making it the most advantageous cooperative purchasing program in the country.

32) Describe in detail any unique marketing techniques and methods as a part of your proposal that would separate you from other companies in your industry.

Both Elgin and Vactor are the # 1 manufacturer in their respective industry based on overall sales. Our distributor network experience and breadth of sales and service coverage enables Elgin and Vactor to maintain their market leadership positions.

33) Describe your company's Senior Management level commitment with regards to embracement, promoting, supporting and managing a resultant NJPA awarded contract

Senior management has fully embraced our current NJPA contract and is wanting to continue this relationship going forward. Administrative effort for our current contract and possible future contract is fully supported.

34) Do you view your products/equipment applicable to an E-procurement ordering process? Yes/ No.

No not at the user/member level. Our scope of option and special content is too great.

a) If yes, describe examples of E-procurement system/s or electronic marketplace solutions that your products/equipment was available through. Demonstrate the success of government and educations customers to ordering through E-procurement.

35) Please describe how you will communicate your NJPA pricing and pricing strategy to your sales force nationally?

Elgin and Vactor communicate our NJPA pricing through price sheets. The price sheets are available to our Dealer Network through a secure Dealer website. Also, RSMs are aware of all potential NJPA sales and ensure pricing accuracy and provide dealer training and support if required.

Other Cooperative Procurement Contracts Held

36) Identify all cooperative contracts hosted by any government or education agency or government or education cooperative or by a third party marketing company, which are marketed in more than one state, held or utilized by the Proposer.

While not held by our company, several of our third party dealers do hold state and local purchasing contracts. While utilized by our local dealers these purchasing contracts do not necessitate specific pricing discounts.

37) What is the annual dollar sales volume generated through each of the contract(s) identified in your answer to the previous question.

Unknown

38) Identify awarded WSCA or specific state procurement contracts held or utilized by the Proposer with any State of the United States.

As noted in question 36, several of our dealers hold specific state or DOT purchasing contracts. While these contracts are utilized specific factory discount are minimal if any.

39) What is the annual combined dollar sales volume for each of these contracts?

Unknown

40) Identify any GSA Contracts held or utilized by the Proposer.

We do not hold a GSA contract, however, we do utilize a GSA contract help by one of our dealers. GS-30F-1012H.

41) If you are awarded the NJPA contract, are there any market segments or verticals (e.g., higher education, K-12 local governments, non-profits etc.) or geographical markets where the NJPA contract will not be your primary contract purchasing vehicle? If so, please identify those markets and which cooperative purchasing agreement will be your primary vehicle.

Our NJPA contract is the lead purchasing vehicle on a national level with the only possible exception of local dealer sponsored procurement contracts. It should be noted that these local dealer sponsored contracts do not enjoy the same level of discounted pricing from manufacture.

42) If you are awarded the NJPA contract, is it your intention and commitment to lead with your NJPA contract? __X_ Yes ____ No Explain and demonstrate your commitment and/or restrictions.

Our intentions can be seen with the annual growth from our current NJPA contract from March of 2010 to the present.

43) Identify a proposed administrative fee payable to NJPA for facilitation, management and promotion of the NJPA contract, should you be awarded. This fee is typically calculated as a percentage of Contract sales and not a line item addition to the customers cost of goods.

We propose the fee payable to NJPA for facilitation, management, and promotion of the NJPA contract to be 0.5% of the contract sale (less third party supplied items; same as current arrangement).

Value Added Attributes

44) If applicable, describe any product/equipment training programs available as options for NJPA members. If applicable, do you offer equipment operator training as well as maintenance training? __X_ Yes ____ No

ESG offers hands on training programs to our end users at both the Elgin and Vactor facilities. These classes are geared primarily towards maintenance and are most appropriate for new customers or new users. In addition, our dealers provide user training and basic maintenance upon product deliver, most dealers have annual product training programs ("Refresher classes") held at their facilities for their area customers.

45) Is this training standard as a part of a purchase or optional?

The basic training as part of the delivery is a standard offering with purchase of equipment. In-depth operator or mechanics training can be arranged and is optional.

46) Describe current technological advances your proposed equipment/products and related services offer.

Both Elgin and Vactor offer our various models in Alternative Fuel configurations. Elgin also offers Waterless Sweeping technologies.

47) Describe your "Green" program as it relates to your company, your products/equipment, and your recycling program, including a list of all green products accompanied by the certifying agency for each (if applicable).

Elgin

1. Recycle Steel
2. Recycle Aluminum
3. Recycle Copper
4. Recycle Cardboard
5. Recycle Bulk Plastic
6. Recycle Oil/Coolant
7. Recycle Wood Pallets
8. Have some returnable pallets
9. Cleaning agent of choice is "Simple Green"
10. Fluorescent bulbs recycled
11. Powder Coat Paint – no VOC's
12. Run Energy Efficient Compressors (Variable Drive)
13. Run Energy Efficient Boilers (Localized heating)
14. Have ability to run air compressors on natural gas
15. Recycle Computer equipment
16. Dispose of hazardous and non-hazardous waste efficiently
17. Current Plan to implement energy management system
18. An environmentally sound spill clean-up program that minimizes waste is in-place
19. Old batteries are recycled

20. All Units Re-circulate water on assembly line water testing
21. Installed flushless toilets and faucets
22. Participate in ComEd Curtailment program (not all companies can or do)

Vactor

1. White Office Paper
2. Colored Paper
3. Computer Paper
4. Envelopes And Junk Mail Minus The Plastic Wrap
5. Newsprint
6. Glossy Magazines, Catalogs And Phone Books
7. Wire
8. Cans
9. All Grades Of Scrap Steel Incl. Carbon Steel, Stainless Steel, Aluminum, & Shavings From Machinery Work
10. Solvent From Painting Operations
11. Recycle wood pallets
12. Recycle cardboard

48) Describe any Women or Minority Business Entity (WMBE) or Small Business Entity (SBE) accreditations and the general minority and small business program of your organization as it relates to a Contract resulting from this RFP.
Not Applicable.

49) Identify any other unique or custom value added attributes of your company or your products/equipment or related services.
Both Elgin and Vactor are American made products.

50) Other than what you have already demonstrated or described, what separates your company, your products/equipment and related services from your competition? What makes your proposed solutions unique in your industry as it applies to NJPA members?
Elgin offers a full range of mechanical, vacuum, and regenerative air sweeper products in various sizes, sold and serviced through the largest dealer network in North America. Vactor offers a full range of truck-mounted sewer line cleaning equipment with various debris body sizes, including the ability to customize with user specific features. Also, Vactor offers several sizes of truck-mounted hydro-excavation products designed to suit specific needs and applications.

51) Identify and describe any service contract options included in the proposal, or offered as a proposed option, for the products/equipment being offered.
Service contracts are not offered at the manufacture level. Most ESG dealerships do offer service contract options.

52) Identify your ability and willingness to offer an awarded contract to qualifying member agencies in Canada specifically and internationally in general.
Both Elgin and Vactor products are sold and serviced through a network of more than 100 factory trained dealer locations worldwide. We have thorough dealer sales and service support throughout Canada. Elgin and Vactor are willing to explore international contract sales opportunities assuming currency fluctuation risks can be mitigated.

53) Describe any unique distribution and/or delivery methods or options offered in your proposal.
Not Applicable

(Products, Pricing, Sector Specific, Services, Terms and Warranty are addressed on <u>Form P</u>)

Signature: _____ Date: Feb. 17, 2014

Form B

PROPOSER INFORMATION

Company Name: Federal Signal Corp.

Address: 1415 W. 22nd Street Suite 1100

City/State/Zip: Oak Brook, IL 60523

Phone: 630-954-2000 Fax:

Toll Free Number: E-mail:

Web site: www.federalsignal.com

Voids sometimes exist between management (those who respond to RFPs) and sales staff (those who contact NJPA Members) that result in communication problems. Due to this fact, provide the names of your key sales people, phone numbers, and geographic territories for which they are responsible

COMPANY PERSONNEL CONTACTS

Authorized Signer for your organization*:

Name: David Panizzi

Email: dpanizzi@federalsignal.com Phone: 847-622-7153

* By executing Form F, the "Proposer's Assurance of Compliance," you are certifying this person identified here has their authorization to sign on behalf of your organization:

Author of your proposal response

Name: David Panizzi Title: Business Development Mgr.

Email: dpanizzi@federalsignal.com Phone: 847-622-7153

Your Primary Contact person regarding your proposal:

Name: David Panizzi Title:

Email: Phone:

Other important contact information:

Name: Dan Federico Title: Director, Dealer Sales

Email: dfederico@federalsignal.com Phone: 813-713-1455

Name: Title:

Email: Phone:

Form C

EXCEPTIONS TO PROPOSAL, TERMS, CONDITIONS AND SOLUTIONS REQUEST

Company Name: Federal Signal Corp. (Elgin and Vactor)

Note: **Original must be signed** and inserted in the inside front cover pouch.

Any exceptions to the Terms, Conditions, Specifications, or Proposal Forms contained herein shall be noted in writing and included with the proposal submittal. Proposer acknowledges that the exceptions listed may or may not be accepted by NJPA and may or may not be included in the final contract. NJPA may clarify exceptions listed here and document the results of those clarifications in the appropriate section below.

Section/page	Term, Condition, or Specification	Exception		
		None		

Proposer's Signature: [signature] **Date:** Feb. 17, 2014

FORM D

Formal Offering of Proposal
(To be completed Only by Proposer)

SEWER VACUUM, HYDRO-EXCAVATION, AND/OR STREET SWEEPER EQUIPMENT WITH RELATED ACCESSORIES AND SUPPLIES,

In compliance with the Request for proposal (RFP) for "SEWER VACUUM, HYDRO-EXCAVATION, AND/OR STREET SWEEPER EQUIPMENT WITH RELATED ACCESSORIES AND SUPPLIES", the undersigned warrants that I/we have examined this RFP and, being familiar with all of the instructions, terms and conditions, general specifications, expectations, technical specifications, service expectations and any special terms, do hereby propose, fully commit and agree to furnish the defined equipment/products and related services in full compliance with all terms, conditions of this RFP, any applicable amendments of this RFP, and all Proposer's Response documentation. Proposer further understands they accept the full responsibility as the sole source of responsibility of the proposed response herein and that the performance of any sub-contractors employed by the Proposer in fulfillment of this proposal is the sole responsibility of the Proposer.

Company Name: Federal Signal Corp. Date: Feb. 17, 2014

Company Address: 1415 W. 22nd Street Suite 1100

City: Oak Brook State: IL Zip: 60523

Contact Person: David Parizzi Title: Business Development Mgr. - ESG

Authorized Signature (ink only): David Parizzi
(Name printed or typed)

Form E

Contract Acceptance and Award

(To be completed only by NJPA)

NJPA 022014 Sewer Vacuum, Hydro Excavators and/or Street Sweepers Equipment with Related Accessories + Supplies

Federal Signal Corp

Proposer's full legal name

Your proposal is hereby accepted and awarded. As an awarded Proposer, you are now bound to provide the defined product/equipment and services contained in your proposal offering according to all terms, conditions, and pricing set forth in this RFP, any amendments to this RFP, your Response, and any exceptions accepted or rejected by NJPA on Form C.

The effective start date of the Contract will be May 27th, 20 14 and continue for four years from the board award date. This contract has the consideration of a fifth year renewal option at the discretion of NJPA.

National Joint Powers Alliance® (NJPA)

NJPA Authorized signature: _____ Dr. Chad Crawford

NJPA Executive Director (Name printed or typed)

Awarded this 18th day of March, 20 14 **NJPA Contract Number** # 022014 - FSC

NJPA Authorized signature: _____ Scott Veronen

NJPA Board Member (Name printed or typed)

Executed this 18th day of March, 20 14 **NJPA Contract Number** # 022014 - FSC

Proposer hereby accepts contract award including all accepted exceptions and NJPA clarifications identified on FORM C.

Vendor Name Federal Signal Corp.

Vendor Authorized signature: _____ David Panizzi

(Name printed or typed)

Title: Business Development Manager

Executed this 24th day of March, 20 14 **NJPA Contract Number** # 022014 - FSC

Form F

PROPOSER ASSURANCE OF COMPLIANCE

Proposal Affidavit Signature Page

PROPOSER'S AFFIDAVIT

The undersigned, representing the persons, firms and corporations joining in the submission of the foregoing proposal (such persons, firms and corporations hereinafter being referred to as the "Proposer"), being duly sworn on his/her oath, states to the best of his/her belief and knowledge:

1. The undersigned certifies the Proposer is submitting their proposal under their true and correct name, the Proposer has been properly originated and legally exists in good standing in its state of residence, that the Proposer possesses, or will possess prior to the delivery of any product/equipment and related services, all applicable licenses necessary for such delivery to NJPA members agencies nationally, and that they are authorized to act on behalf of, and encumber the "Proposer" in this Contract, and

2. To the best of my knowledge, no Proposer or Potential Proposer, nor any person duly representing the same, has directly or indirectly entered into any agreement or arrangement with any other Proposers, Potential Proposers, any official or employee of the NJPA, or any person, firm or corporation under contract with the NJPA in an effort to influence either the offering or non-offering of certain prices, terms, and conditions relating to this RFP which tends to, or does, lessen or destroy free competition in the letting of the Contract sought for by this RFP, and

3. The Proposer or any person on his/her behalf, has not agreed, connived or colluded to produce a deceptive show of competition in the manner of the proposal or award of the referenced contract, and

4. Neither I, the Proposer, nor, any officer, director, partner, member or associate of the Proposer, nor any of its employees directly involved in obtaining contracts with the NJPA or any subdivision of the NJPA, has been convicted of false pretenses, attempted false pretenses or conspiracy to commit false pretenses, bribery, attempted bribery or conspiracy to bribe under the laws of any state or federal government for acts or omissions after January 1, 1985, and

5. The Proposer has examined and understands the terms, conditions, scope, contract opportunity, specifications request and other documents of this solicitation and that any and all exceptions have been noted in writing and have been included with the proposal submittal, and

6. If awarded a contract, the Proposer will provide the equipment/products and services and/or services to qualifying members of the NJPA in accordance with the terms, conditions, scope of this RFP, Proposer offered specifications and other documents of this solicitation, and

7. The undersigned, being familiar with and understand the expectations requested and outlined in this RFP under consideration, hereby proposes to deliver through valid requests, Purchase Orders or other acceptable forms ordering and procurement by NJPA Members. Unless otherwise indicated, requested and agreed to on a valid purchase order per this RFP, only new, unused and first quality equipment/products and related services are to be transacted with NJPA Members relating to an awarded contract, and

8. The Proposer has carefully checked the accuracy of all proposed products/equipment and related services and listed total price per unit of purchase in this proposal to include shipping and delivery considerations. In addition, the Proposer accepts all general terms and conditions of this RFP, including all responsibilities of commitment as outlined and proposed, and

9. In submitting this proposal, it is understood that the right is reserved by the NJPA to reject any or all proposals

and it is agreed by all parties that this proposal may not be withdrawn during a period of 90 days from the date proposals were opened regarding this RFP, and

10. The Proposer certifies that in performing this Contract they will comply with all applicable provisions of the federal, state, and local laws, regulations, rules, and orders, and

11. The Proposer understands that submitted proposals which are marked "confidential" in their entirety, or those in which a significant portion of the submitted proposal is marked "nonpublic" **will not** be accepted by NJPA. Pursuant to Minnesota Statute §325C.01, subd. 5 and §13.03, subd. 1, only specific parts of the proposal may be labeled a "trade secret". All proposals are nonpublic until the contract is awarded; at which time, both successful and unsuccessful vendors' proposals become public information.

12. The Proposer understands and agrees that NJPA will not be responsible for any information contained within the proposal. Should Vendors not comply with the labeling and packing requirements, proposals will be released as submitted.

13. By signing below, the Proposer understands it is his or her responsibility as the Vendor to act in protection of labeled information and agree to defend and indemnify NJPA for honoring such designation. Proposer duly realizes failure to so act will constitute a complete waiver and all submitted information will become public information; additionally failure to label any information that is released by NJPA shall constitute a complete waiver of any and all claims for damages caused by the release of the information.

[The rest of this page has been left intentionally blank. Signature page below]

By signing below, Proposer is acknowledging that he or she has read, understands and agrees to comply with the terms and conditions specified above.

Company Name: Federal Signal Corp.

Contact Person for Questions: David Panizzi 847-622-7153

(Must be individual who is responsible for filling out this Proposer's Response form)

Address: 1415 W. 22nd Street Suite 1100

City/State/Zip: Oak Brook, IL 60523

Telephone Number: 847-622-7153 Fax Number: 847-622-7191

E-mail Address: dpanizzi@federalsignal.com

Authorized Signature: D. Panizzi

Authorized Name (typed): David Panizzi

Title: Business Development Manager - ESG

Date: Feb. 17, 2014

Notarized

Subscribed and sworn to before me this _____ day of _____, 20_____

Notary Public in and for the County of _____ State of _____

My commission expires: _____

Signature: _____

Form P

PROPOSER QUESTIONNAIRE
Products/Equipment, Pricing, Sector Specific, Services, Terms and Warranty

Proposer Name: ___Federal Signal Corp.__(Elgin and Vactor)_____

Questionnaire completed by: _____David Panizzi_____

Payment Terms and Financing Options

1) Identify your payment terms if applicable. (Net 30, etc.)
   Payment Terms are determined between the ESG Dealer and the NJPA member. General terms between dealer and ESG are Net 30.
2) Identify any applicable leasing or other financing options as defined herein.
   Available leasing programs are determined between the ESG Dealer and NJPA member. We do sponsor third party full service lease and turnkey maintenance program for our dealers.
3) Briefly describe your proposed order process for this proposal and contract award. (Note: order process may be modified or refined during an NJPA member's final Contract phase process).
   a. Please specify if you will be including your dealer network in this proposal. If so, please specify how involved they will be. (For example, will he Dealer accept the P.O.?), and how are we to verify the specific dealer is part of your network?

   NJPA member submits a Purchase Order to the ESG Dealer with payment made by the NJPA member to the ESG Dealer. ESG dealer will facilitate all product orders. Elgin and Vactor equipment is exclusively provided by contracted dealers. If required, a detailed listing of dealers can be provided.
4) Do you accept the P-card procurement and payment process?
   Not Applicable.

Warranty

5) Describe, in detail, your Manufacture Warranty Program including conditions and requirements to qualify, claims procedure, and overall structure.
   Standard Warranty is for 12 months on the complete unit, but certain components have longer standard warranties.These are identified in our Standard Limited Warranty Statement. The Statement also defines start date, application, etc. Units are registered for warranty in our on-line warranty system. Claims are filed by the ESG Service provider within this system, as well. Additionally, the ESG Service Parts and Warranty Guide is published on the ESG Dealer website, and contains claim submission standards, and guidelines for conducting warranty repairs.
6) Do all warranties cover all products/equipment parts and labor?
   All Standard Warranties include material and labor to either repair or replace, at our option.
7) Do warranties impose usage limit restrictions?
   Standard Limited Warranty is based on days in service only. There is no restriction on operating hours.
8) Do warranties cover the expense of technicians travel time and mileage to perform warranty repairs?
   ESG dealers are compensated for travel time up to 3 hours round trip, per reasonably required trip.
9) Please list any other limitations or circumstances that would not be covered under your warranty.
   Such conditions are defined in the Standard Limited Warranty Statement, such as customer abuse, misuse, or lack of proper maintenance, etc.
10) Please list any geographic regions of the United States for which you cannot provide a certified technician to perform warranty repairs. How will NJPA Members in these regions be provided service for warranty repair?
    ESG dealer network covers the entire U.S. NJPA member can arrange with ESG dealer in their respective area to receive warranty work.

Equipment/Products and Related Services and Pricing

11) Provide a general narrative description of the equipment/products and related services you are offering in your proposal.
Elgin Street Sweepers and Vactor Combination Sewer Cleaners and Hydro Excavation Machines.

12) Provide a general narrative description of your pricing model identifying how the model works (line item and/or published catalog percentage discount).
Excel Spread sheets for both Elgin Street Sweepers and Vactor Combination Sewer Cleaners are listed in separate folders on the electronic (CD) version of this submittal. Each model has a base unit price with options listed as line items.

13) Please quantify the discount range presented in this response pricing as a percentage discount from MSRP/published list.
NJPA members enjoy a 3% minimum discount from list price. The price sheets provided will show line item pricing and calculate and apply the 3% NJPA discount.

14) Provide an overall proposed statement of method of pricing for individual line items, percentage discount off published product/equipment catalogs and/or category pricing percentage discount with regard to all equipment/products and related services and being proposed. Provide a SKU number for each item being proposed.
The end user is able to configure a machine to meet their needs using the Excel Spreadsheet. Each model and all options have a part number and all manufacture supplied options receive a 3% discount (minimum).

15) Propose a strategy, process, and specific method of facilitating "Sourced Product/Equipment and Related Services" (AKA, "Open Market" items or "Non-Standard Options").
Elgin and Vactor offer "special" option capability which allows engineering to research and design unique product features. These "Specials" will be priced using our specials process and discounted at the 3% level (minimum). The only exception being our "sourced product" chassis or special chassis options to which the 3% would not apply. Chassis are a pass through cost item.

16) Provide your NJPA customer volume rebate programs, as applicable.
Reviewed on an individual basis.

17) Identify any Total Cost of Acquisition (as defined herein) cost(s) which is **NOT** included "Pricing" submitted with your proposal response. Identify to whom these charges are payable to and their relationship to Proposer.
Any dealer costs for dealer installed items including local freight and PDI are not included in our pricing submittal.
Any costs associated with the delivery of a piece of equipment to an NJPA member AFTER it has been delivered to the respective ESG dealer is negotiated between the ESG Dealer and the NJPA member. Such costs could be delivery from the ESG Dealer to the NJPA member, putting the unit into service, special training, recommended spare parts list, etc.

18) If freight, delivery or shipping is an additional cost to the NJPA member, describe in detail the complete shipping and delivery program.
Any costs associated with the delivery of a piece of equipment to an NJPA member AFTER it has been delivered to the respective ESG dealer is negotiated between the ESG Dealer and the NJPA member. Such costs could be delivery from the ESG Dealer to the NJPA member, putting the unit into service, training, recommended spare parts list, etc.

19) As an important part of the evaluation of your offer, you must indicate the level of pricing you are offering.
Prices offered in this proposal are **(Your proposal will be deemed "Non-Responsive" if this question is not answered):**

_____a. Pricing is the same as typically offered to an individual municipality, Higher ed or school district.

____X __b. Pricing is the same as typically offered to GPOs, cooperative procurement organizations or state purchasing departments.

_____c. Better than typically offered to GPOs, cooperative procurement organizations or state purchasing departments.

20) Do you offer quantity or volume discounts? __X__ YES _____ NO Outline guidelines and program.
Volume discounts are evaluated on a case-by-case basis.

21) Describe in detail your proposed exchange and return program(s) and policy(s).
Products exchanges and returns are extremely rare. Should an exchange or return be warranted because of product failure appropriate accommodations would be handled on a case-by-case basis.

22) Specifically identify those shipping and delivery and exchange and returns programs as they relate to Alaska and Hawaii and any related off shore delivery of contracted products/ equipment and related services
Products exchanges and returns are extremely rare. Should an exchange or return be warranted because of product failure appropriate accommodations would be handled on a case by case basis including shipping charges?

23) Please describe any self-audit process/program you plan to employ to verify compliance with your anticipated contract with NJPA. Please be as specific as possible.
Dealers are required to indicate an NJPA purchase on their purchase order. Dealers are required to report customer information including Name, Contact information, and transaction price. ESG Director of Sales tracks and reports on all NJPA contract sales on a quarterly basis.

Industry or Sector Specific Questions

24) NA

Signature: _____ Date: Feb. 17, 2014

ADDENDUM ONE (1)
To that certain
NJPA RFP #022014
Issued by
National Joint Powers Alliance®
For the procurement of

SEWER VACUUM, HYDRO-EXCAVATION, AND/OR STREET SWEEPER EQUIPMENT WITH RELATED ACCESSORIES AND SUPPLIES

Consider the following to be part of the above titled RFP:

1) **Questions submitted by Potential Responders at the Pre-Proposal Conference on February 6, 2014 are listed in black font and NJPA Answers are listed in blue:**

Q: What percentage of your client base are public works departments versus school systems.
A: Approximately 30% of NJPA's membership is in Government and about 40% of membership is in Education.

Q: How many contracts do you expect to award in this category?
A: Per section 1.13 of the RFP, NJPA's intent is to award a contract to a single exclusive vendor but reserves the right to award to multiple Proposers where the result of the responding Proposers justifies a multiple award and multiple contracts are deemed to be in the best interests of the NJPA member agencies.

Q: Clarify the normal purchase order and payment flow for a manufacturer that utilizes distributors. manufacturer accepts order from distributor, and manufacturer pays admin fee to NJPA quarterly?
A: When a vendor is awarded an NJPA contract all authorized distributors/dealers are able to sell through the contract. The PO would be accepted at the distributor/dealer level and the administrator/manufacturer would be responsible to submit a cumulative sales report to NJPA on a quarterly basis with admin fee payment.

Q: How and where in your point scale will you recognize a successful previous NJPA awarded vendor?
A: Form A questions address this and could be reflected in a number of different criteria including but not limited to: Industry & Marketplace Success and Ability to Sell and Service Nationwide.

ACKNOWLEDGMENT OF ADDENDUM ONE (1) TO RFP DISTRIBUTED VIA EMAIL ON FEBRUARY 6, 2014

COMPANY NAME: Federal Signal Corp.

SIGNATURE: [signature]

DATE: Feb. 17, 2014

CERTIFICATE OF LIABILITY INSURANCE

DATE(MM/DD/YYYY) 11/04/2013

THIS CERTIFICATE IS ISSUED AS A MATTER OF INFORMATION ONLY AND CONFERS NO RIGHTS UPON THE CERTIFICATE HOLDER. THIS CERTIFICATE DOES NOT AFFIRMATIVELY OR NEGATIVELY AMEND, EXTEND OR ALTER THE COVERAGE AFFORDED BY THE POLICIES BELOW. THIS CERTIFICATE OF INSURANCE DOES NOT CONSTITUTE A CONTRACT BETWEEN THE ISSUING INSURER(S), AUTHORIZED REPRESENTATIVE OR PRODUCER, AND THE CERTIFICATE HOLDER.

IMPORTANT: If the certificate holder is an ADDITIONAL INSURED, the policy(ies) must be endorsed. If SUBROGATION IS WAIVED, subject to the terms and conditions of the policy, certain policies may require an endorsement. A statement on this certificate does not confer rights to the certificate holder in lieu of such endorsement(s).

PRODUCER
Aon Risk Services Central, Inc.
Chicago IL Office
200 East Randolph
Chicago IL 60601 USA

CONTACT NAME:
PHONE (A/C. No. Ext): (866) 283-7122 FAX (A/C. No.): (800) 363-0105
E-MAIL ADDRESS:

INSURER(S) AFFORDING COVERAGE		NAIC #
INSURER A:	National Union Fire Ins Co of Pittsburgh	19445
INSURER B:	New Hampshire Ins Co	23841
INSURER C:	Insurance Co of the State of PA	19429
INSURER D:	Lloyd's Syndicate No. 2623	AA1128623
INSURER E:		
INSURER F:		

INSURED
Federal Signal Corporation
its divisions and subsidiaries
1415 West 22nd Street, Suite 1100
Oak Brook IL 60523-9945 USA

COVERAGES **CERTIFICATE NUMBER:** 570051880393 **REVISION NUMBER:**

THIS IS TO CERTIFY THAT THE POLICIES OF INSURANCE LISTED BELOW HAVE BEEN ISSUED TO THE INSURED NAMED ABOVE FOR THE POLICY PERIOD INDICATED. NOTWITHSTANDING ANY REQUIREMENT, TERM OR CONDITION OF ANY CONTRACT OR OTHER DOCUMENT WITH RESPECT TO WHICH THIS CERTIFICATE MAY BE ISSUED OR MAY PERTAIN, THE INSURANCE AFFORDED BY THE POLICIES DESCRIBED HEREIN IS SUBJECT TO ALL THE TERMS, EXCLUSIONS AND CONDITIONS OF SUCH POLICIES. LIMITS SHOWN MAY HAVE BEEN REDUCED BY PAID CLAIMS. Limits shown are as requested

INSR LTR	TYPE OF INSURANCE	ADDL INSR	SUBR WVD	POLICY NUMBER	POLICY EFF (MM/DD/YYYY)	POLICY EXP (MM/DD/YYYY)	LIMITS	
A	GENERAL LIABILITY			GL6819408	11/01/2013	11/01/2014	EACH OCCURRENCE	$1,000,000
A	X COMMERCIAL GENERAL LIABILITY			GL Premise			DAMAGE TO RENTED PREMISES (Ea occurrence)	$1,000,000
	CLAIMS-MADE X OCCUR			GL6819409	11/01/2013	11/01/2014	MED EXP (Any one person)	$10,000
				GL Products			PERSONAL & ADV INJURY	$1,000,000
							GENERAL AGGREGATE	$2,000,000
	GEN'L AGGREGATE LIMIT APPLIES PER:						PRODUCTS - COMP/OP AGG	$6,000,000
	X POLICY PRO-JECT LOC						Prod-Comp/Ops - Ea Occur	$3,000,000
A	AUTOMOBILE LIABILITY			CA6579515	11/01/2013	11/01/2014	COMBINED SINGLE LIMIT (Ea accident)	$1,000,000
A	X ANY AUTO			AOS			BODILY INJURY (Per person)	
A	ALL OWNED AUTOS / SCHEDULED AUTOS			CA6579517	11/01/2013	11/01/2014	BODILY INJURY (Per accident)	
A	HIRED AUTOS / NON-OWNED AUTOS			MA			PROPERTY DAMAGE (Per accident)	
				CA6579516	11/01/2013	11/01/2014		
				VA				
	UMBRELLA LIAB / OCCUR						EACH OCCURRENCE	
	EXCESS LIAB / CLAIMS-MADE						AGGREGATE	
	DED / RETENTION							
B	WORKERS COMPENSATION AND EMPLOYERS' LIABILITY			WC026020465	11/01/2013	11/01/2014	X WC STATUTORY LIMITS / OTHER	
B	ANY PROPRIETOR / PARTNER / EXECUTIVE OFFICER/MEMBER EXCLUDED? Y/N N (Mandatory in NH)	N/A		AOS			E.L. EACH ACCIDENT	$500,000
	If yes, describe under DESCRIPTION OF OPERATIONS below			WC026020469	11/01/2013	11/01/2014	E.L. DISEASE-EA EMPLOYEE	$500,000
				CA			E.L. DISEASE-POLICY LIMIT	$500,000
D	E&O-MPL-Primary			W1314D130201	11/01/2013	11/01/2014	Each Claim	$1,000,000
				E&O Techonology Liability			Policy Aggregate	$1,000,000

DESCRIPTION OF OPERATIONS / LOCATIONS / VEHICLES (Attach ACORD 101, Additional Remarks Schedule, if more space is required)
Evidence of Insurance.

CERTIFICATE HOLDER

Federal Signal Corporation
Its Divisions and Subsidiaries
1415 West 22nd Street, Suite 1100
Oak Brook IL 60523-9945 USA

CANCELLATION

SHOULD ANY OF THE ABOVE DESCRIBED POLICIES BE CANCELLED BEFORE THE EXPIRATION DATE THEREOF, NOTICE WILL BE DELIVERED IN ACCORDANCE WITH THE POLICY PROVISIONS.

AUTHORIZED REPRESENTATIVE

Aon Risk Services Central, Inc.

Holder Identifier :

Certificate No : 570051880393

©1988-2010 ACORD CORPORATION. All rights reserved.

ACORD 25 (2010/05) The ACORD name and logo are registered marks of ACORD

CERTIFICATE OF LIABILITY INSURANCE

DATE(MM/DD/YYYY) 12/09/2013

THIS CERTIFICATE IS ISSUED AS A MATTER OF INFORMATION ONLY AND CONFERS NO RIGHTS UPON THE CERTIFICATE HOLDER. THIS CERTIFICATE DOES NOT AFFIRMATIVELY OR NEGATIVELY AMEND, EXTEND OR ALTER THE COVERAGE AFFORDED BY THE POLICIES BELOW. THIS CERTIFICATE OF INSURANCE DOES NOT CONSTITUTE A CONTRACT BETWEEN THE ISSUING INSURER(S), AUTHORIZED REPRESENTATIVE OR PRODUCER, AND THE CERTIFICATE HOLDER.

IMPORTANT: If the certificate holder is an ADDITIONAL INSURED, the policy(ies) must be endorsed. If SUBROGATION IS WAIVED, subject to the terms and conditions of the policy, certain policies may require an endorsement. A statement on this certificate does not confer rights to the certificate holder in lieu of such endorsement(s).

Holder Identifier :

PRODUCER
Aon Risk Services Central, Inc.
Chicago IL Office
200 East Randolph
Chicago IL 60601 USA

CONTACT NAME:
PHONE (A/C. No. Ext): (866) 283-7122 FAX (A/C. No.): (800) 363-0105
E-MAIL ADDRESS:

INSURER(S) AFFORDING COVERAGE		NAIC #
INSURER A:	National Union Fire Ins Co of Pittsburgh	19445
INSURER B:	New Hampshire Ins Co	23841
INSURER C:	The Insurance Co of the State of PA	19429
INSURER D:	RSUI Indemnity Company	22314
INSURER E:	Berkley National Insurance Company	38911
INSURER F:		

INSURED
Federal Signal Corporation
its divisions and subsidiaries
1415 West 22nd Street, Suite 1100
Oak Brook IL 60523-9945 USA

COVERAGES **CERTIFICATE NUMBER:** 570052159815 **REVISION NUMBER:**

THIS IS TO CERTIFY THAT THE POLICIES OF INSURANCE LISTED BELOW HAVE BEEN ISSUED TO THE INSURED NAMED ABOVE FOR THE POLICY PERIOD INDICATED. NOTWITHSTANDING ANY REQUIREMENT, TERM OR CONDITION OF ANY CONTRACT OR OTHER DOCUMENT WITH RESPECT TO WHICH THIS CERTIFICATE MAY BE ISSUED OR MAY PERTAIN, THE INSURANCE AFFORDED BY THE POLICIES DESCRIBED HEREIN IS SUBJECT TO ALL THE TERMS, EXCLUSIONS AND CONDITIONS OF SUCH POLICIES. LIMITS SHOWN MAY HAVE BEEN REDUCED BY PAID CLAIMS. **Limits shown are as requested**

INSR LTR	TYPE OF INSURANCE	ADDL INSR	SUBR WVD	POLICY NUMBER	POLICY EFF (MM/DD/YYYY)	POLICY EXP (MM/DD/YYYY)	LIMITS	
A	GENERAL LIABILITY			GL6819408	11/01/2013	11/01/2014	EACH OCCURRENCE	$1,000,000
A	X COMMERCIAL GENERAL LIABILITY			GL Premise			DAMAGE TO RENTED PREMISES (Ea occurrence)	$1,000,000
	CLAIMS-MADE X OCCUR			GL6819409	11/01/2013	11/01/2014	MED EXP (Any one person)	$10,000
				GL Products			PERSONAL & ADV INJURY	$1,000,000
							GENERAL AGGREGATE	$2,000,000
	GEN'L AGGREGATE LIMIT APPLIES PER:						PRODUCTS - COMP/OP AGG	$6,000,000
	X POLICY PRO-JECT LOC						Prod-Comp/Ops - Ea Occur	$3,000,000
A	AUTOMOBILE LIABILITY			CA6579515	11/01/2013	11/01/2014	COMBINED SINGLE LIMIT (Ea accident)	$1,000,000
				AOS				
A	X ANY AUTO			CA6579517	11/01/2013	11/01/2014	BODILY INJURY (Per person)	
	ALL OWNED AUTOS / SCHEDULED AUTOS			MA			BODILY INJURY (Per accident)	
A	HIRED AUTOS / NON-OWNED AUTOS			CA6579516	11/01/2013	11/01/2014	PROPERTY DAMAGE (Per accident)	
				VA				
D	X UMBRELLA LIAB X OCCUR			NHN065443	11/01/2013	11/01/2014	EACH OCCURRENCE	$1,000,000
	EXCESS LIAB CLAIMS-MADE			SIR applies per policy terms & conditions			AGGREGATE	$1,000,000
	DED X RETENTION							
B	WORKERS COMPENSATION AND EMPLOYERS' LIABILITY			WC026020465	11/01/2013	11/01/2014	X WC STATU-TORY LIMITS / OTH-ER	
B	ANY PROPRIETOR / PARTNER / EXECUTIVE OFFICER/MEMBER EXCLUDED? Y/N N (Mandatory in NH)	N/A		AOS			E.L. EACH ACCIDENT	$500,000
	If yes, describe under DESCRIPTION OF OPERATIONS below			WC026020469	11/01/2013	11/01/2014	E.L. DISEASE-EA EMPLOYEE	$500,000
				CA			E.L. DISEASE-POLICY LIMIT	$500,000

DESCRIPTION OF OPERATIONS / LOCATIONS / VEHICLES (Attach ACORD 101, Additional Remarks Schedule, if more space is required)

Named insured includes: Elgin Sweeper Co. & Vactor Manufacturing, 1300 W. Bartlett Road, Elgin, IL 60120. RE: Rfp. No. 031710. Certificate Holder is included as Additional Insured as required by written contract, but limited to the operations of the Insured under said contract, with respect to the General Liability policy.

Certificate No : 570052159815

CERTIFICATE HOLDER

National Joint Powers Alliance
Attn: Andy Campbell
200 First Street Northeast
Staples MN 56479 USA

CANCELLATION

SHOULD ANY OF THE ABOVE DESCRIBED POLICIES BE CANCELLED BEFORE THE EXPIRATION DATE THEREOF, NOTICE WILL BE DELIVERED IN ACCORDANCE WITH THE POLICY PROVISIONS.

AUTHORIZED REPRESENTATIVE

Aon Risk Services Central, Inc.

©1988-2010 ACORD CORPORATION. All rights reserved.

ACORD 25 (2010/05)

The ACORD name and logo are registered marks of ACORD

AGENCY CUSTOMER ID: 10224264
LOC #:

ADDITIONAL REMARKS SCHEDULE

AGENCY	NAMED INSURED
Aon Risk Services Central, Inc.	Federal Signal Corporation
POLICY NUMBER: See Certificate Number: 570052159815	
CARRIER: See Certificate Number: 570052159815 / NAIC CODE:	EFFECTIVE DATE:

ADDITIONAL REMARKS

THIS ADDITIONAL REMARKS FORM IS A SCHEDULE TO ACORD FORM,
FORM NUMBER: ACORD 25 **FORM TITLE:** Certificate of Liability Insurance

INSURER(S) AFFORDING COVERAGE	NAIC #
INSURER	
INSURER	
INSURER	
INSURER	

ADDITIONAL POLICIES If a policy below does not include limit information, refer to the corresponding policy on the ACORD certificate form for policy limits.

INSR LTR	TYPE OF INSURANCE	ADDL INSR	SUBR WVD	POLICY NUMBER	POLICY EFFECTIVE DATE (MM/DD/YYYY)	POLICY EXPIRATION DATE (MM/DD/YYYY)	LIMITS	
	WORKERS COMPENSATION							
B		N/A		WC026020470 FL	11/01/2013	11/01/2014		
C		N/A		WC026020471 MA, ND, WA, WY	11/01/2013	11/01/2014		
B		N/A		WC026020466 IL, KY, NC, UT	11/01/2013	11/01/2014		
B		N/A		WC026020467 NJ, PA	11/01/2013	11/01/2014		
B		N/A		WC026020468 AZ, GA, VA	11/01/2013	11/01/2014		

© 2008 ACORD CORPORATION. All rights reserved.
The ACORD name and logo are registered marks of ACORD

202 12th Street NE
P.O. Box 219
Staples, MN 56479

Pricing, financials and marketing material were submitted with the response and is available upon request. Due to the difficulty in emailing such a large file they were not included.

As a public agency, NJPA proposals, responses and awarded contracts are a matter of public record, except for that data included in the proposals, responses and awarded contracts that is classified as nonpublic; thus, pursuant to NJPA policies and RFP terms and conditions, all documentation, except for data which is nonpublic, is available for review through a formal request process including a written request.

March 30, 2016

City Of Sacramento
5730 24th Street
Sacramento, CA 95822

Ms. Isena Garcia,

In accordance with your request, we are pleased to submit the following quote for your consideration and approval:

One (1) New VACTOR 2100 PLUS
12-Cubic Yard Capacity, 16" PD Blower unit with 1500 Gallons of Water, mounted on a
2017 Kenworth T440 6 X 4 with Cummins ISL 370 HP Engine, Allison 3000 RDS Transmission.
Equipped with all Standard and Optional Equipment as listed:

Standard Options Included:

One Keyed/Weatherproof Aluminum Tool Box, 48X22X24, Passenger side sub frame
Aluminum Fenders
Mud Flaps
Electric/Hydraulic Four Way Boom
Color Coded Sealed Electrical System
Remote Pendant Control with 35' Cord
Dual Action Hydraulic Dump Hoist Cylinder
2" Y Strainer with 25' Fill Hose
Handgun Assembly and 1/2" X 35' Hose & Quick Dis-connect
Ex-Ten Steel Cylindrical Debris Tank
Flexible Hose Guide
(3) Nozzles with Carbide Inserts & Nozzle Rack
Suction Tube Storage: Curbside 2 Pipe, Rear Door 2 Pipe
1" Nozzle Pipe
Flat Rear Door with Hydraulic Locks & Door Power Up/Down, Open/Close
Dual 10" SS Float Shut Off System/Rear mounted
SS Micro Strainer Prior to Blower
Debris Body Vacuum Relief System
Debris Deflector Plate
Liquid Float Level Indicator

3" Y Strainer at Water Pump, 3" Drain
Midship Handgun Coupling
600' x 1" Sewer Hose, 2500 PSI
Side Mount Water Pump
Hose Wind Guide, Dual Roller
Hose Footage Counter, Mechanical
Hose Reel, Hydraulic Extend/Retract
Hose Reel Chain Cover (Full)
Hydraulic Extending 15" Hose Reel 1" X 800' Capacity
Tachometer /Chassis Engine
Circuit Breakers
LED Lights, Clearance, Back Up, Stop, Tail and Turn
Tow Hooks Front and Rear
Electronic Back Up Alarm
Module-Wet On Wet DuPont Paint
8" Vacuum Pipe Package – 40' Vacuum Pipe
Emergency Flare Kit
Fire Extinguisher - 5#
1000 Gallons Water/ 48" Dump height
Vansco-Electronic Package
Performance Package: Hydraulic Variable flow, Dual Hydraulic Pumps
Boom Transport Cradle

Blower Air Shift Controls
Low Water Light & Alarm

Optional Items Included

Debris Body Flush Out System
Debris Body Vacuum Relief System with Debris Body Load Limit Alarm
(1) 6" Butterfly Valve Rear Door @ 3:00
Full Rear Door Swinging Screen
Centrifugal Separators
Fold Down Pipe Rack, Curbside
Fold Down Pipe Rack, Street Side
Splash Shield Bolted to Body Flange/Rear Door
Lube Manifold
Low Water Alarm with Warning Light
1500 Gallons Water/ 60" Dump height
Laval Water Separator
Rodder Pump Drain Valves (2)
10' Telescopic Boom with 180- Degree Rotation
Rotatable Boom Inlet Hose
Front Joystick Control for Boom Function
Hot Shift Blower Control at Front Panel
3" Y strainer @ fill ILO 2" w/25" fill hose
80 GPM/2500 PSI Water System
800' x 1" Piranha Sewer Hose
1" X 15' Leader Hose Assembly
Accumulator System for Water Pump
Front and Rear Handgun Couplers
Retractable Hand Gun Hose Reel
Hydro Excavation Package w/Retractable reel & 50' x ½" hose
Telescoping/Rotating Hose Reel with Dual Controls
Automatic Hose Level Wind Guide, Indexing Digital Hose Footage Counter
Hydraulic Shut-Off Valves at Suction, Return and Filter line
Hydraulic Oil Temp Alarm
LED Spotlight w/12V Charger & Plug
DOT 3 Lighting Package, 6 Federal Signal Strobe Lights, LED
LED Mid-Ship Turn Signals
Signal Master LED Arrow Stick, 8 lights
Work lights (2) LED on Telescopic Boom
Work lights (2) LED, Rear Door
Work light LED, Operators Station
Work light LED, Curb side
Work light LED, Street side
Work light LED, OES Articulated arm, located at Hose Reel
Camera System-Front, Rear & Both Sides
Heavy Duty Boom Elbow
Long handle tool storage
Toolboxes-Front Bumper Mounted 16w X 12h X 18d w/ LED side markers
Toolbox-Behind Cab-16w X 30h X 96d
Toolbox-Driver side Chassis Frame 24w X 24h X 24d
Toolbox-Driver side Subframe 18w X 24h X 24d
Lights in tool boxes
Dupont Imron Elite Paint
Safety Cone Storage Rack-Post Style (front)
Safety Cone Storage Drop-In Style (rear)
Vacuum Tube Handle
Mount all Vactor Controls in dash
Install Customer supplied Decals
Chassis to include- Dual Vinyl Air ride Seats, AM/FM CD w/Bluetooth, Electric Windows, Power Door Locks, Heated Remote Mirrors
Factory Trip for 3, Pre-Delivery Inspection

Waterproof, Rechargeable, Wireless, Handheld

TOTAL LIST PRICE F.O.B. Sacramento, Ca……..$435,457.00

NJPA Contract # 031710-FSC Discount……..……..…… ($35,037.00)

NJPA PRICE F.O.B Sacramento, Ca…….……$400,420.00

SALES TAX 8.5%..... $34,035.70

TOTAL PRICE…… $434,455.70*
***License fees included**

Install Zonar, VIB System, Laptop Mount…… $1,995.00

Total……... $436,450.70

THE PROPERTY HEREIN IS GUARANTEED BY MANUFACTURER'S WARRANTY ONLY AND SELLER MAKES NO WARRANTY EXPRESSED OR IMPLIED, OF MERCHANTABILITY OR OTHERWISE, OR OF FITNESS FOR ANY PARTICULAR PURPOSE, THAT EXTENDS BEYOND THE ABOVE DESCRIPTION OF THE EQUIPMENT.

NOTE: Price is good until May 31, 2016. Cost increases due to the addition of Government mandated safety or environmental devices incurred after the date of this proposal, will be charged to you at our cost. Proof of such costs, if any, will be documented.

TAXES: SALES TAX applicable at time of delivery will be shown on our invoice. FEDERAL EXCISE TAXES, if applicable, will require payment unless a properly executed Exemption Certificate is submitted.

DELIVERY: Approximately 250 Days ARO **TERMS:** Net 30 Days

We appreciate the opportunity to present this proposal and look forward to being of further and continued service. If you have any questions, please contact me at (916) 717-0873.

Sincerely,

Scott Elrod

Scott Elrod
Territory Manager

KENWORTH

Central Illinois Trucks, Inc. C251 **3030 May Rd.**	**VACTOR MFG/OWEN EQUIPMENT** **1621 S. Illinois St.**
Peru, Illinois United States 61354 **Phone:** **Fax:** **Email:**	**Streator, Illinois United States 61364** **Phone: (253) 852-5819** **Fax:** **Contact Email:** **Prepared for:**

Vehicle Summary

Unit

Model:	T400 Series Conventional.
Type:	FULL TRUCK
Description:	POKT370A-2017.0

Application

Intended Serv.:	Local pickup & delivery.
Commodity:	Vehicles which haul Other bulk goods

Body

Type:	Vacuum tank
Length (ft):	23.0
Height (ft):	12.0
Max Laden Weight (lbs):	22000

Trailer

No. of Trailer Axles:	0
Type:	
Length (ft):	0.0
Height (ft):	0.0
Kingpin Inset (in):	0
Corner Radius (in):	0

Restrictions

Length (ft):	120
Width (in):	102
Height (ft):	15.0

Chassis

Fr Axle Load (lbs):	20000
Rr Axle Load (lbs)	46000
G.C.W. (lbs):	66000
Road Conditions:	
Class A (Highway)	88
Class B (Hwy/Mtn)	10
Class C (Off-Hwy)	02
Class D (Off-Road)	00
Maximum Grade:	6
Wheelbase (in):	260
Overhang (in):	71
Fr Axle to BOC (in):	67
Cab to Axle (in):	193
Cab to EOF (in):	264
Overall Comb. Length (in):	381

Special Req.

U.S. Domestic Registry, 50-State.

Approved by: _____ **Date:** _____

Note: All sales are F.O.B. designated plant of manufacture.

PACCAR FINANCIAL

Ask your dealer for a quote today, or visit our website @ www.paccarfinancial.com.

PACCAR Financial offers innovative finance, lease and insurance programs customized to meet your needs.

Unpublished options may require review/approval.
Dimensional and performance data for unpublished options may vary from that displayed in PROSPECTOR.

Printed:	3/1/2016 8:12:27 AM	*Complete*	Model Number:	T400 Series Conventional.
Effective Date:	Jul 1, 2015		Quote/DTPO/CO:	Q71125577
Prepared by:	ID: GRANT MAGERKURTH		Version Number:	36.22

KENWORTH

Central Illinois Trucks, Inc. C251 **3030 May Rd.**	**VACTOR MFG/OWEN EQUIPMENT** **1621 S. Illinois St.**
Peru, Illinois United States 61354 **Phone:** **Fax:** **Email:**	**Streator, Illinois United States 61364** **Phone: (253) 852-5819** **Fax:** **Contact Email:** **Prepared for:**

Data	Code	Description	$ List	Weight
Model				
0000410	O	**T400 Series Conventional.**		11,600
0070070	O	**T440 6x4 Class 8**	0	0
0072001	O	**Chassis operation will include** stationary application used in lower 48 states [US only]. Stationary operation is defined as running the engine under load while stationary at a substantial fraction of engine gross horsepower (60% or greater) for an extended period of time (longer than 5 - 10 minutes).	0	0
0080050	O	**CARB Idle Emissions Reduction Feature for PX-7** and PX-9		0
0090062	O	**T440 6x4 Class 8**	0	0
0091080	O	**Other bulk goods**	0	0
0093005	O	**Local pickup & delivery. Vehicles which haul** freight, typically operating within a 100-mile radius, on public streets & highways, & other paved surfaces, including limited Class C roads. Includes package & freight delivery, as well as fuel oil or petroleum distribution, etc. Road usage: minimum 3% Class B, do not code for Class D.	0	0
0095165	O	**Vacuum tank**	0	0
0098025	O	**U.S. Domestic Registry, 50-State**	0	0
Engine & Equipment				
0129570	O	**PX-9 370 2013 370@2000 365@2100 1250@1400** Includes turbo exhaust brake, no code is used. Diagnostic Plug for data link, Oil Cooler, Aluminum Flywheel Housing. N09200 N205 120..Standard Maximum Speed Limit [LSL] N09220 N207 0....Expiration Distance N09240 P09 120...Hard Maximum Speed Limit N09260 P14 64...Maximum Accelerator Pedal Vehicle Speed N09280 P16 0....Accelerator Lower Droop N09300 P19 64...Maximum Cruise Speed N09320 C143 0....Cruise Control Lower Droop N09360 N203 252..Reserve Speed Function Reset Distance N09380 N202 0....Maximum Cycle Distance N09400 N206 10...Maximum Active Distance N09420 N201 0....Reserve Speed Limit Offset N09440 P11 No...Engine Protection Shutdown N09460 P06 No...Gear Down Protection N09480 P26 1400.Max PTO Speed		0

Unpublished options may require review/approval.
Dimensional and performance data for unpublished options may vary from that displayed in PROSPECTOR.

Printed:	3/1/2016 8:12:27 AM	*Complete*	Model Number:	T400 Series Conventional.
Effective Date:	Jul 1, 2015		Quote/DTPO/CO:	Q71125577
Prepared by:	ID: GRANT MAGERKURTH		Version Number:	36.22

Data	Code	Description	$ List	Weight
		N09500 P02 No...Cruise Control Auto Resume N09520 P04 No...Auto Engine Brake in Cruise N09540 N209 0....Expiration Distance N09560 P520 Yes..Enable Idle Shutdown Park Brake Set N09580 P32 5....Timer Setting N09600 P233 Yes..Enable Impending Shutdown Warning N09620 P234 60...Timer For Impending Shutdown Warning N09640 P516 35...Engine Load Threshold N09680 P33 No...Idle Shutdown Manual Overrule N09720 P230 Yes..Enable Hot Ambient Automatic Overrule N09740 P46 40...Low Ambient Temperature Threshold N09760 P56 60...Intermediate Ambient Temperature Threshold N09780 P47 80...High Ambient Temperature Threshold		
1000157	O	**Prospector Version 37.1** Replaces 37.0	0	0
1000684	O	**Effective VSL Setting NA**	0	0
1000858	O	**Engine Idle Shutdown Timer Disabled**	0	0
1000859	O	**Enable EIST Ambient Temp Overrule**	0	0
1000860	O	**Enable EIST in PTO Mode** Use only with MX and Cummins engines	0	0
1000891	O	**Eff EIST NA Expiration Miles** Use only with MX and Cummins engines	0	0
1002060	S	**Air compressor: Cummins 18.7 CFM, Cummins, PACCAR** PX engines.	0	0
1051092	S	**Engine mount Powercore air cleaner.** w/constant torque SS clamps, pop-up air restriction indicator. Pop-up indicator is standard.	0	0
1105230	O	**Fan Hub: Horton 2-Speed for ISL9, ISL-G,** PX-8 or PX-9		0
1122505	S	**Cooling module: 1300 square inches.** Includes aluminum radiator core, aluminum charge air cooler, translucent surge tank and washer bottle, silicone hoses, and extended life coolant. Drain valve is not available w/Allison transmissions.	0	0
1247150	S	**RH under cab DPF/SCR w/ RH SOC vertical tailpipe.** For use w/ daycabs, extended daycabs, or modular sleepers. T660 requires split fender hood	0	0
1290118	U	**Tailpipe: 5 in. Single 18 in. 45 degree** curved.		0
1323109	S	**Fleetguard filter/Water separator FS1003 w/WIF** (water in fuel) sensor. For PACCAR PX-8/PX-9 or Cummins ISL engines.	0	0
1500029	O	**Kenworth Fuel Cooler** Required for Cummins engines with a single fuel tank. Required for PACCAR MX-13 engine with a single fuel tank and stationary use: High RPM, low vehicle speed, sustained for longer than 1 hour. Optional for all other applications.		6
1504002	O	**Immersion block heater 120V 1000W w/plug under** door on C500, T660, T800 & W900.		0

Unpublished options may require review/approval.
Dimensional and performance data for unpublished options may vary from that displayed in PROSPECTOR.

Printed:	3/1/2016 8:12:27 AM	*Complete*	Model Number:	T400 Series Conventional.
Effective Date:	Jul 1, 2015		Quote/DTPO/CO:	Q71125577
Prepared by:	ID: GRANT MAGERKURTH		Version Number:	36.22

Data	Code	Description	$ List	Weight
1509029	U	**Shutoff valves F/Trlr Heat w/Hoses Rout** ed 3' BOC/BOS		0
1816260	O	**Alternator: PACCAR 160 amp, brush type**	0	0
1821225	O	**Batteries: 2 PACCAR GP31 threaded post (1000)** 2000 CCA starting.		4
1836100	S	**Starter: PACCAR 12 volt electrical system. W/** centralized power distribution incorporating plug-in style relays. Circuit protection for serviceability, 12-volt light system w/circuit protection circuits number & color coded.	0	0
1900082	O	**Multi-function engine connector for body builder** interface for Cummins.		0
1901078	U	**J1939 HARNESS EXTENSION UNDER HOOD AT F** IREWALL,		0
Transmission & Clutch				
2011003	U	**Allison 3000RDS Cooler Lines Run to Por** ts on Front Side of Trans.		0
2011205	O	**Transmission: Allison 3000RDS 6-speed** w/PTO drive gear. 5th Gen controls. Includes heat exchanger & oil level sensor. Rugged Duty Series for vocational applications. Transynd transmission fluid is standard on all Allison 1000, 2000, 3000 & 4000 series transmissions. Requires a push button shift control code. Oil temperature gauge is standard on class 8 models.		291
2403410	O	**Driveline: 3 medium-duty 2 centerbearing.** *Med duty is 1760 series.		169
2410018	O	**Torque converter included w/Allison** Transmission.	0	0
2410151	O	**Pushbutton control center console mounted.** Class 8 with Allison Transmission.	0	0
2410204	O	**Delete Allison FuelSense**	0	0
2410433	U	**Allison 5th Gen RDS PKG 172 for 3000,**	0	0
2429100	O	**Chassis will be fitted w/LH transmission PTO.** (PREVENTS ECU F/INTERFERING W/PTO ONLY)	0	0
2429101	O	**Chassis will be fitted w/RH transmission PTO.** (PREVENTS ECU F/INTERFERING W/PTO ONLY)	0	0
2460068	U	**OPT LOC TRANS OIL COOLER FOR BODY CLR.** Allison Only.	0	0
2480315	O	**Severe Service rear transmission support** spring(s).		15
Front Axle & Equipment				
2517020	O	**Meritor MFS20 Front Axle rated 20K** 3.5in. DROP. Standard Track.		140
2621078	O	**Front Brakes: 22K Bendix ES S-cam 16.5x6 in.**		-46

Unpublished options may require review/approval.
Dimensional and performance data for unpublished options may vary from that displayed in PROSPECTOR.

Printed:	3/1/2016 8:12:27 AM	*Complete*	Model Number:	T400 Series Conventional.
Effective Date:	Jul 1, 2015		Quote/DTPO/CO:	Q71125577
Prepared by:	ID: GRANT MAGERKURTH		Version Number:	36.22

Data	Code	Description	$ List	Weight
2690035	O	**Front Brake Drum: 22,000 lbs. 16-1/2x6 in. Cast.**		104
2702022	O	**Front Hubs Iron hub pilot 22,000 lbs. 10 Bolt** 16.5x6in. or 7in. or air disc brakes. 10 Bolt, 11-1/4 in. bolt circle. Consider Wheelguards (5850002) with aluminum wheels.		80
2741970	S	**ConMet PreSet Plus Hub package; front axle.**	0	0
2750001	S	**Hubcap: front vented.**	0	0
2765001	O	**Front Auto Slack Adjuster.**	0	0
2866020	O	**Front Springs: Taperleaf 20K w/ shock absorbers** w/ maintenance-free elastomer spring pin bushings. Standard with rubber pins except for C500 which has threaded pins. W900S only. Not available on W900L. W900B use 2866021.		241
2893622	O	**Dual power steering gears: 20K TRW TAS65.**		60
2899336	O	**Power Steering Cooler: Radiator mounted air to** oil 2007+ engines only. 2899362 is optional w/ 2006 or 2007 engines.		11
2900024	U	**FRONT FRAME RAISED: 1" (26MM)**	0	0

Rear Axle & Equipment

3142171	O	**Dual Meritor RT46-164PEH rear axle rated at 46K** w/ heavy wall housing. Tandem rear axles.		2,507
3200538	O	**Rear Axle Ratio - 5.38.**	0	0
3334004	O	**Dual Rear Brakes 16-1/2x7 in. to 46K;** Bendix ES-extended service S-cam.	0	0
3392005	O	**Dual Rear Brake Drums: cast.**	0	0
3403460	O	**Dual Rear Hubs: Iron hub pilot 11-1/4 in. BC.**		104
3407046	O	**Longer studs for aluminum wheels w/ steel hub** pilot wheels.		6
3441972	O	**ConMet PreSet Plus Hub package; dual rear axle.**	0	0
3465002	O	**Dual Rear axle automatic slack adjusters.**	0	0
3485209	O	**Spring Brake: 3030 high output dual.**	0	0
3495226	S	**Bendix 4S/4M anti-lock brake system.**	0	0
3747460	O	**Rear suspension: Tandem Hendrickson RT463 46K.** 54 in. axle spacing. Steel beams & barpin bushing. 6 in. saddle height. Unladen Height: 11.1 in. Laden Height: 10 in.		1,055

Tires & Wheels

4077535	O	**Front tires: Bridgestone M860A 315/80R22.5 20PR.** 42.8 in. diameter, all position. 19.9 in. SLR.		94
4277518	O	**Rear tires: Bridgestone M710ECOPIA 11R22.5 14PR.** 41.8 in. diameter, drive. 19.5 in. SLR. Smartway certified. Code is priced per pair of tires.		56
4880000	O	**Tires selected limit top vehicle speed delivery** requirements may apply see TE-1127/1045. Speed restricted tires.	0	0
4900008	O	**Rear Tire Quantity: 8**	0	0

Unpublished options may require review/approval.
Dimensional and performance data for unpublished options may vary from that displayed in PROSPECTOR.

Printed:	3/1/2016 8:12:27 AM	*Complete*	Model Number:	T400 Series Conventional.
Effective Date:	Jul 1, 2015		Quote/DTPO/CO:	Q71125577
Prepared by:	ID: GRANT MAGERKURTH		Version Number:	36.22

Data	Code	Description	$ List	Weight
5045254	O	**Front wheel: Alcoa 89465 22.5x9 aluminum with** Lvl One [TM] finish, hub pilot mount. 10000lb. maximum rating. Air disc brake compatible.		-18
5242274	O	**Rear wheel: Accuride 50408 22.5x8.25 steel** Steel Armor[TM] powder coat, hub pilot mount. 7400lb. maximum rating. 2-hand holes. Air disc brake compatible. Code is priced per pair of wheels.	4	16
5853906	O	**Powder coat white steel wheel. Use in conjunction** with front, dual front, rear, spare or lift axle wheel code(s). All wheels on chassis must have same finish color.	0	0
5900008	O	**Rear Wheel/Rim Quantity: 8**	0	0
Frame & Equipment				
6054600	O	**Frame Rails: 10-5/8 x 3-1/2 x 5/16 in. Steel to** 337 in. to 416 in. Truck frame weight is 2.91 lb.-in. per pair of rails. Section modulus is 14.80, RBM is 1,776,000 in-lbs per rail. Frame rail availability may be restricted based upon application, axle/suspension capacity, fifth wheel setting, or component/dimensional specifications. The results of the engineering review may result in a change to the requested frame rail. If a change is required Kenworth Application Engineering will advise the dealer of the appropriate material specification for a substitute rail.		329
6141600	O	**Full Steel Insert: for 10-5/8 in. or 10-3/4 in.** Steel 337 in. to 416 in. or 2nd insert for 11-5/8 in. steel frame. Adds 1,149,000 in-lb to main rail RBM. Truck insert weight is 2.05 lb.-in. per pair of rails. Full frame insert length is equal to wheelbase plus rear frame cutoff plus dimension forward of front axle by model: T660 and T800 = 21.26 in., C500B = bumper setting minus 0.79 in., W900B = 5.27 in., W900L = 1.50 in., W900S = 3.27 in., T440/T470 50 in. bumper setting = 21.26 in., T470 73 in. bumper setting = 72.3 in.		722
6309910	O	**Delete bumper: Requires a bumper setting code.**		-94
6319050	S	**50 in. Bumper setting. Requires a bumper code.**	0	0
6390103	S	**Front mudflaps.**	0	0
6391201	O	**Custom Frame Layout: one chassis** N6402 Cust Drwg 504400C REVB N6403 Layout Same as 465604 N6404 2 Air Tnks Under BBox N6405 2 Air Tnks in Overhang		0
6400636	O	**Battery box cantilever aluminum BOC w/** fiberglass cover. N6400 Bat Box needs to be N6401 as close to fuel tank as poss		8
6409901	O	**Battery box location: LH Side.**	0	0
6451090	S	**T470,C5, T6, T8 non-polished DPF/SCR or CNG cover** diamond plate w/ step. For use w/ 2010 or later exhaust systems. For T8, use extended length non-polished battery box on opposite rail to match the length of under cab components.		30
6679995	O	**Customer will install structural end-of-frame** crossmember before vehicle is placed in service.	0	0

Unpublished options may require review/approval.
Dimensional and performance data for unpublished options may vary from that displayed in PROSPECTOR.

Printed:	3/1/2016 8:12:27 AM	*Complete*	Model Number:	T400 Series Conventional.
Effective Date:	Jul 1, 2015		Quote/DTPO/CO:	Q71125577
Prepared by:	ID: GRANT MAGERKURTH		Version Number:	36.22

Data	Code	Description	$ List	Weight
		N6670 DELETE REAR SUSPENSION C/M N6671 INSTALL AIR TNKS IN EOF AREA		
6721102	S	**Rear mudflap arms: Betts B-25 standard-duty,** straight. Includes B1732 mounting brackets as standard.	0	0
6722000	S	**Rear mudflap shields: White plastic antisail w/** Kenworth logo.	0	0
6742009	S	**Square end-of-frame w/ o crossmember;non-towing.**	0	0
6790003	O	**Special frame drill: dealer to provide drawing** with dimensions and revision level. Acceptable hole diameters range from 10.2 mm to 40.4 mm. Preferred file format is .pdf. Not for use for rear suspension, fifth wheel or other published frame drilling code. Does not replace clear frame space requests or custom frame layout. N6798 Drwg#504400C REVB N6799 Same as Prev. Chassis 465604		0
Fuel Tanks & Equip				
7510090	O	**Fuel Tank: 90 US gallon 28.5in. aluminum under** replace. Class 8 fuel tank includes an anti-siphon device on the filler neck.		0
7722011	O	**Small round DEF tank. 11 gallons of** useable volume. The DEF tank will be located on the side you specified. If you have specific configuration or body builder concerns, please utilize the Custom Frame Layout option. Standard capacity is calculated by fuel capacity of the vehicle and will accommodate two diesel fill-ups for every DEF fill-up. For 1:1 DEF fuel fill ratio, add 7889204.	0	0
7881300	O	**Welded-in fitting w/ gasket & cover plate for** mounting customer-installed fuel tank heater.		0
7881310	U	**Plate and gasket moved to rear of fuel** tank.		0
7889203	O	**Standard DEF to fuel fill ratio: 2:1 or greater.**	0	0
7889603	O	**DEF tank location is on the RH.**	0	0
7920090	O	**Location: 90 gal fuel tank LH under cab**	0	0
Cab & Equipment				
8024310	S	**Cab: Curved Glass Conventional.** Cab Includes aluminum & fiberglass fully hucked cab w/ all aluminum bulkhead doors & continuous stainless steel piano-style door hinges. Single electric horn standard. Incandescent exterior lights include diagnosable bulb detection and warning. Trailer cable on tractors includes integrity detection. Standard features include multiplex wiring for interior lights, automated pre-trip inspection, short and open check diagnostics. Warning alarm will sound when lights are left on.	0	0
8090450	S	**Hood: Sloped Aerodynamic T440 Hood.** Includes hood and mounted grille, split fenders w/ mudflaps, & separate bumper.	0	0

Unpublished options may require review/approval.
Dimensional and performance data for unpublished options may vary from that displayed in PROSPECTOR.

Printed:	3/1/2016 8:12:27 AM	*Complete*	Model Number:	T400 Series Conventional.
Effective Date:	Jul 1, 2015		Quote/DTPO/CO:	Q71125577
Prepared by:	ID: GRANT MAGERKURTH		Version Number:	36.22

Data	Code	Description	$ List	Weight
8108010	S	**Cab heater: W/integral defrosters & A/C 45,000** btu cab heater. No sleeper heater/AC. Includes 5 mode rotary control. T660 include filter media.	0	0
8201013	S	**Steering wheel: 18 in. 4-spoke.**	0	0
8201200	O	**Adjustable telescoping tilt steering column.**		10
8208580	O	**30 Amp Power Lead With Ground. Wired Through** Accessory To Behind Rider Seat.		0
8282004	S	**KW Driver Information Center: Includes fuel** economy, RPM display, trip information, truck information, diagnostics, gear display, alarm clock.	0	0
8282009	S	**Instrument package: Includes speedometer,** tachometer, fuel gauge, engine coolant temperature gauge, engine oil pressure, voltmeter. Class 8 also includes primary & secondary air reservoir gauges & an air application gauge. DEF level gauge and warning lamp are included with 2010+ engines. Engine hour meter and outside air temperature readouts are standard. Primary read out will be MPH. Add 8240620 to switch primary scale to KPH in Canada.	0	0
8282107	S	**Large flat panel on dash For customer-installed** controls. Reduces gauge count by 6.	0	0
8331140	S	**Cab Interior: Summit. T440/T470 Only. Includes** smooth upholstered side & back panels w/stitched accent lines, upholstered door pads, full vinyl headliner, black dash panels & black rubber floormats.	0	0
8343304	S	**Interior color: Slate Gray w/trim Dark Slate Gray**	0	0
8410191	O	**Driver seat: Kenworth Air cushion Plus HB vinyl.** Standard features includes 7 in. fore and aft slide adjustment w/isolator, 6-23 degree recline, air suspension with cover, dual armrests, and single chamber air lumbar support. Seat cushion is 20 inches wide w/ 2-position tilt and 2-position front cushion extension. Seat material has a horizontal stitch pattern and is 2-tone in color. Seat back is carpeted and includes a map pocket. Seat is manufactured by National. Includes inside visor and retractable 3-point matching seat belts. Grey seat belts.		0
8480191	O	**Rider seat: Kenworth Air cushion Plus HB vinyl.** Standard features includes 7 in. fore and aft slide adjustment w/isolator, 6-23 degree recline, air suspension with cover, dual armrests, and single chamber air lumbar support. Seat cushion is 20 inches wide w/ 2-position tilt and 2-position front cushion extension. Seat material has a horizontal stitch pattern and is 2-tone in color. Seat back is carpeted. Seat is manufactured by National. Includes inside visor and retractable 3-point matching seat belts. Grey seat belts.		17
8490110	S	**Seat color: Dark Slate Gray.**	0	0
8601422	O	**Kenworth Radio with AM/FM/WB/CD/USB and Bluetooth**		4
8700108	O	**Under dash center console: Includes one cupholder** & two 12V outlets. For use w/Autoshift, Ultrashift, & Allison Gen IV only.		0
8700168	S	**Non-self cancelling turn signal: W/column-mounted** headlight dimmer switch & intermittent wiper control.	0	0

Unpublished options may require review/approval.
Dimensional and performance data for unpublished options may vary from that displayed in PROSPECTOR.

Printed:	3/1/2016 8:12:27 AM	*Complete*	Model Number:	T400 Series Conventional.
Effective Date:	Jul 1, 2015		Quote/DTPO/CO:	Q71125577
Prepared by:	ID: GRANT MAGERKURTH		Version Number:	36.22

Data	Code	Description	$ List	Weight
8700186	S	**Electric LH & RH door locks.**	0	0
8800200	S	**Cab access contoured grabhandles, LH/RH.**	0	0
8800400	S	**Grabhandle LH inside door frame above dash.**	0	0
8800401	S	**Grabhandle RH inside door frame above dash.**	0	0
8832115	O	**DAYLITE DOOR: LH/RH INCL RH PEEPER WINDOW**	0	0
8841411	S	**Single air horn under cab.**	0	0
8850300	S	**Look-Down, Pass. Door, Stainless 8.5x4.4**	0	0
8863570	O	**Dual convex heated mirror 8.5 inch w/ offset** mounting below regular mirror.		11
8867202	O	**Mirror: Dual Moto heated mirrors 7 in. x 16 in.** LH & RH remote controlled. Switch located on door pad.		4
8869005	S	**Mirror brackets 8-1/2 ft load width.**	0	0
8871438	S	**Rear Cab Stationary Window 17 in. x 36 in.**	0	0
8879213	O	**Electric-powered LH & RH door window lifts.** Switch located on door.		0
8890100	S	**One-piece windshield, w/ curved glass.**	0	0
8890134	O	**Exterior aerodynamic sunvisor w/ integral marker** lights.		0
8890351	O	**2 in. rubber wheelwell fender extension.**		8
8890898	O	**Link Cabmate suspension.**		22
Lights & Instruments				
9010801	S	**Headlamps: Halogen Projector Low Beam, Halogen** Complex Reflector High Beam	0	0
9026205	O	**Marker Lights: Five aerodynamic, LED mounted in** sunvisor.		0
9030010	S	**Turn Signal Lights: Mounted on fender**	0	0
9030052	O	**LED Stop,Turn,Tail:Flange Mounted With Two LED** backup lights and with an LED license plate.		2
9090000	O	**Daytime Running Lamps.**		0
9090039	S	**Marker Lights: Interrupter Switch.** Included in Turn Signal For All Models Except T3. The T3 Switch Is In The Dash.	0	0
9090126	O	**Electric Backup Alarm: Meets SAE J994 & OSHA** requirements.		4
9090301	O	**Junction Box: Under cab**		1
9090845	O	**Circuit Breakers: Replacing fuses. Does not** apply to any 5-amp fuse box position. Breakers include stop/brake/turn, tail lamp, high & low beams, marker/clearance lamps, horn, fuel heat, gauges, air dryer, HVAC controls, panel lamps. Some circuits will remain fuses.		0

Unpublished options may require review/approval.
Dimensional and performance data for unpublished options may vary from that displayed in PROSPECTOR.

Printed:	3/1/2016 8:12:27 AM	*Complete*	Model Number:	T400 Series Conventional.
Effective Date:	Jul 1, 2015		Quote/DTPO/CO:	Q71125577
Prepared by:	ID: GRANT MAGERKURTH		Version Number:	36.22

Data	Code	Description	$ List	Weight
Air Equipment				
9101210	S	**Air Dryer: Bendix AD-IS heated.** N9100 Use Dryer Brkt G11-1740R N9101 dryer close as poss to c/m fwd N9102 fwrd of drive axle/dryer fwrd	0	0
9108001	S	**Moisture ejection valve w/ pull cable drain.**	0	0
9140020	S	**Nylon air tubing in frame & cab, excluding hoses** subject to excessive heat or flexing.	0	0
9140252	O	**Locate air dryer inside LH rail BOC.** This code requires the use of a custom frame layout code.	0	0
Extended Warranty				
9200021	O	**Standard Warranty.**	0	0
Miscellaneous				
9409852	O	**GHG Secondary Manufacturer: Does Not Apply**	0	0
Paint				
9700000	O	**Paint color number.** N97020 A - L0006 WHITE N97200 FRAME N0001 BLACK	0	0
9943050	O	**Day Cab Standard Paint**	0	0
9944820	O	**1 - Color Paint - Day Cab** Color will be White if no other color is specified.	0	0
9965510	S	**Base coat/clear coat.** The Kenworth Color Selector contains additional instructions, as well as information on Kenworth paint guidelines and surface finish applications. Kenworth is standard with Dupont Imron Elite paint.	0	0

Unpublished options may require review/approval.
Dimensional and performance data for unpublished options may vary from that displayed in PROSPECTOR.

Printed:	3/1/2016 8:12:27 AM	*Complete*	Model Number:	T400 Series Conventional.
Effective Date:	Jul 1, 2015		Quote/DTPO/CO:	Q71125577
Prepared by:	ID: GRANT MAGERKURTH		Version Number:	36.22

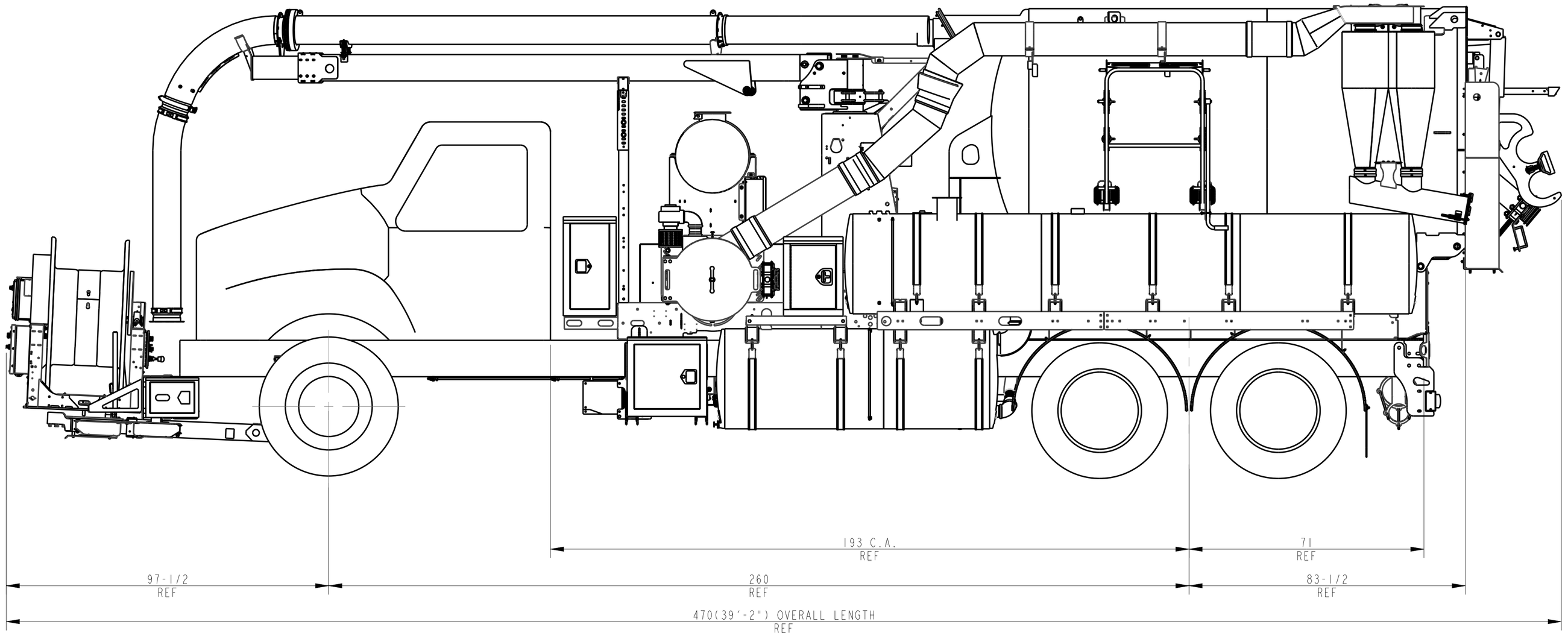

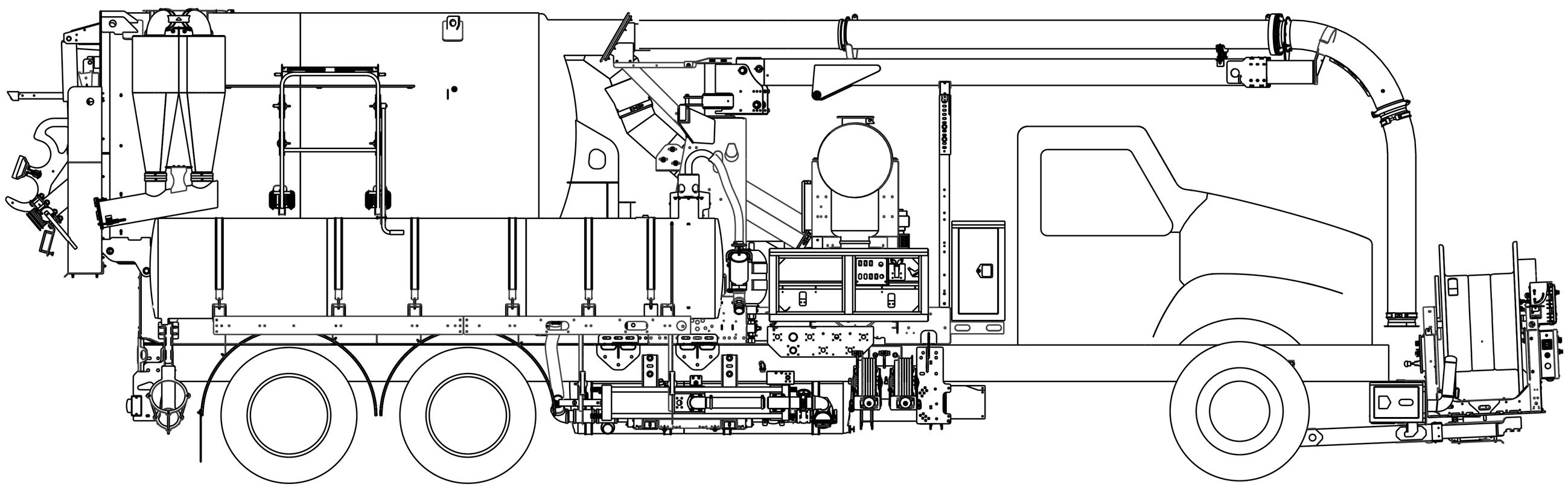

REV	REVISION	BY	DATE	ECN#

THIS DOCUMENT CONTAINS MATERIAL AND/OR INFORMATION WHICH IS THE PROPERTY OF VACTOR MANUFACTURING INC., AND SUPPLIED ONLY ON A CONFIDENTIAL BASIS. NO TRANSMITTAL OR DISCLOSURE SHALL BE MADE TO ANY PERSON, FIRM, OR CORPORATION WITHOUT PRIOR WRITTEN APPROVAL OF VACTOR MANUFACTURING INC.

THE MASTER COPY OF THIS DOCUMENT RESIDES IN ELECTRONIC FORMAT. ALL PRINTED COPIES OF THIS DOCUMENT ARE **UNCONTROLLED**

DIMS IN INCHES
TOLERANCES UNLESS NOTED
ENGINEERING TOLERANCE VACTOR STANDARD E0020
PDM 0.0+
SHEET 1 OF 2

GR:
RM:
PN:

VACTOR MANUFACTURING INC. STREATOR, IL

NAME: 2100+,1500 GAL, PD, 12 YD

MATERIAL: KW T440

DRAWN	DATE	SCALE	SIZE	PART NO	REV
JLM	4/8/16	3/64	D	SD1077	0

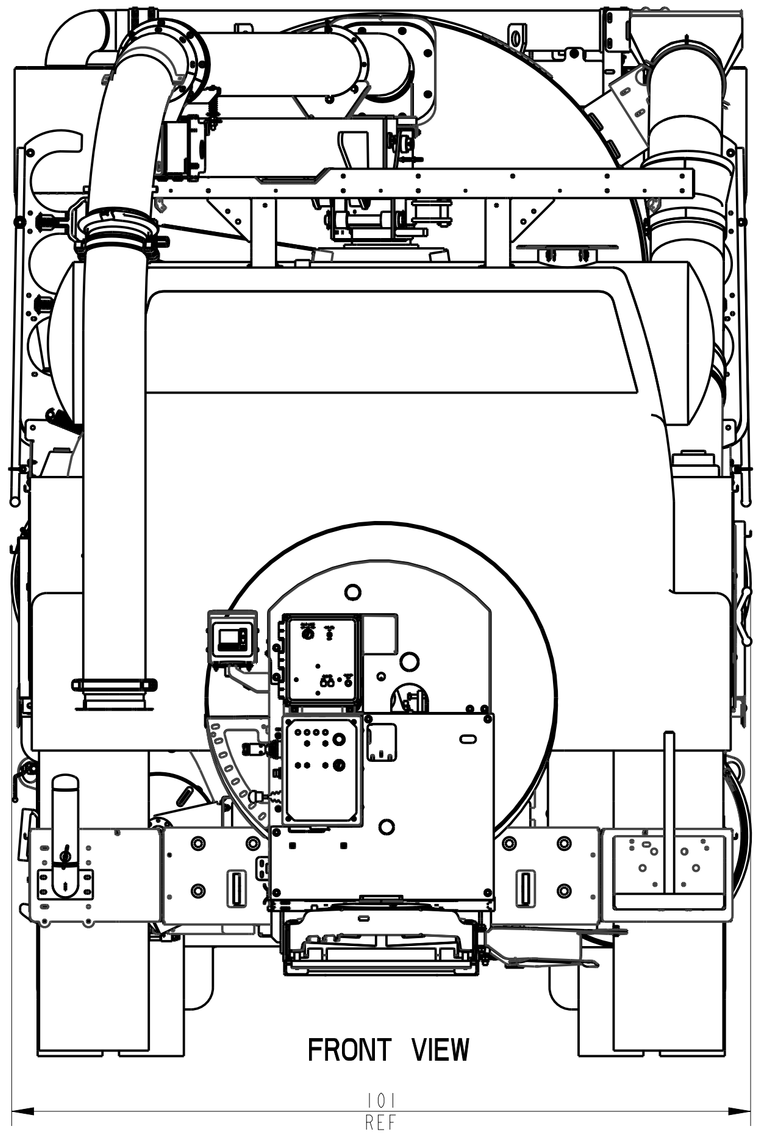

FRONT VIEW

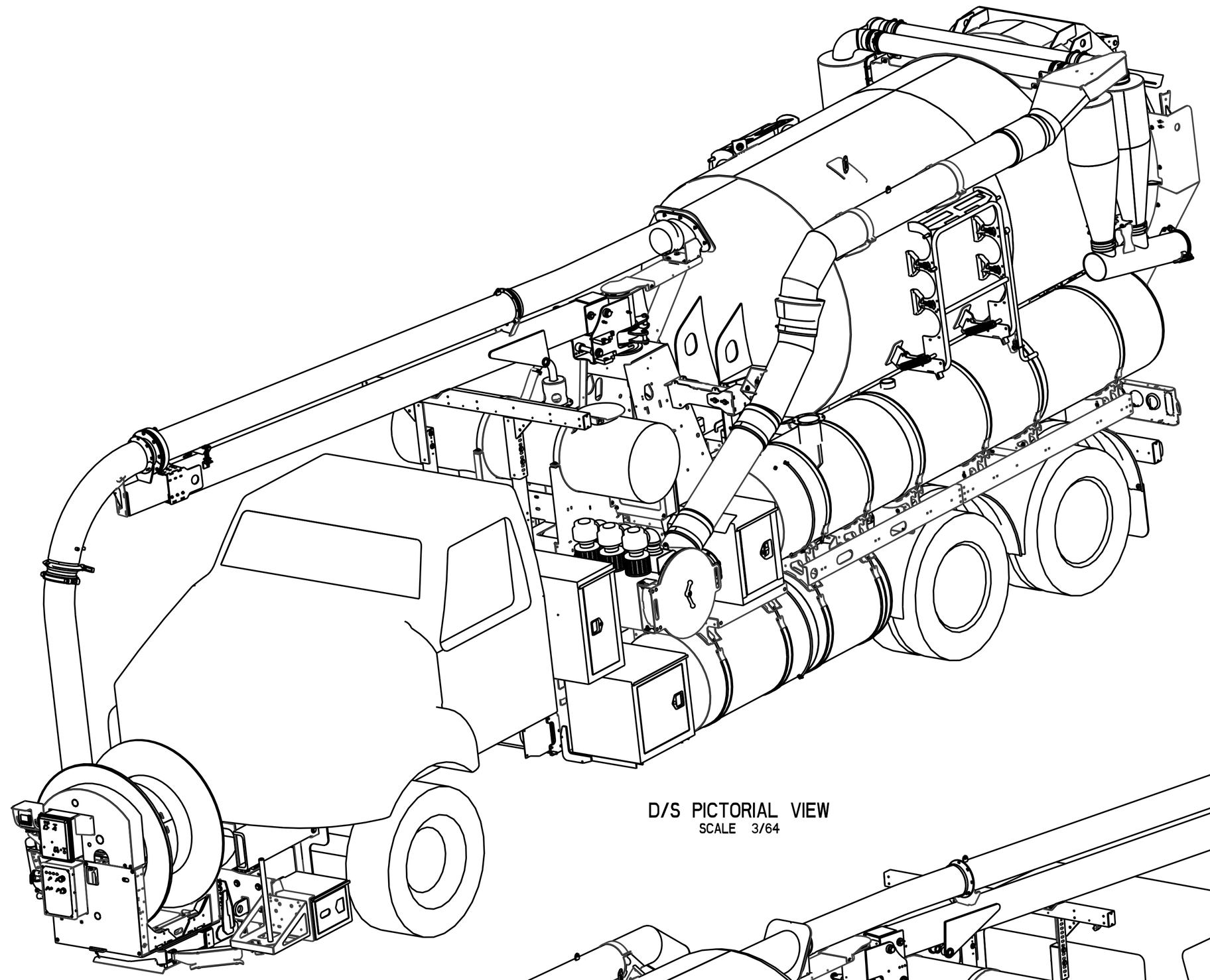

D/S PICTORIAL VIEW
SCALE 3/64

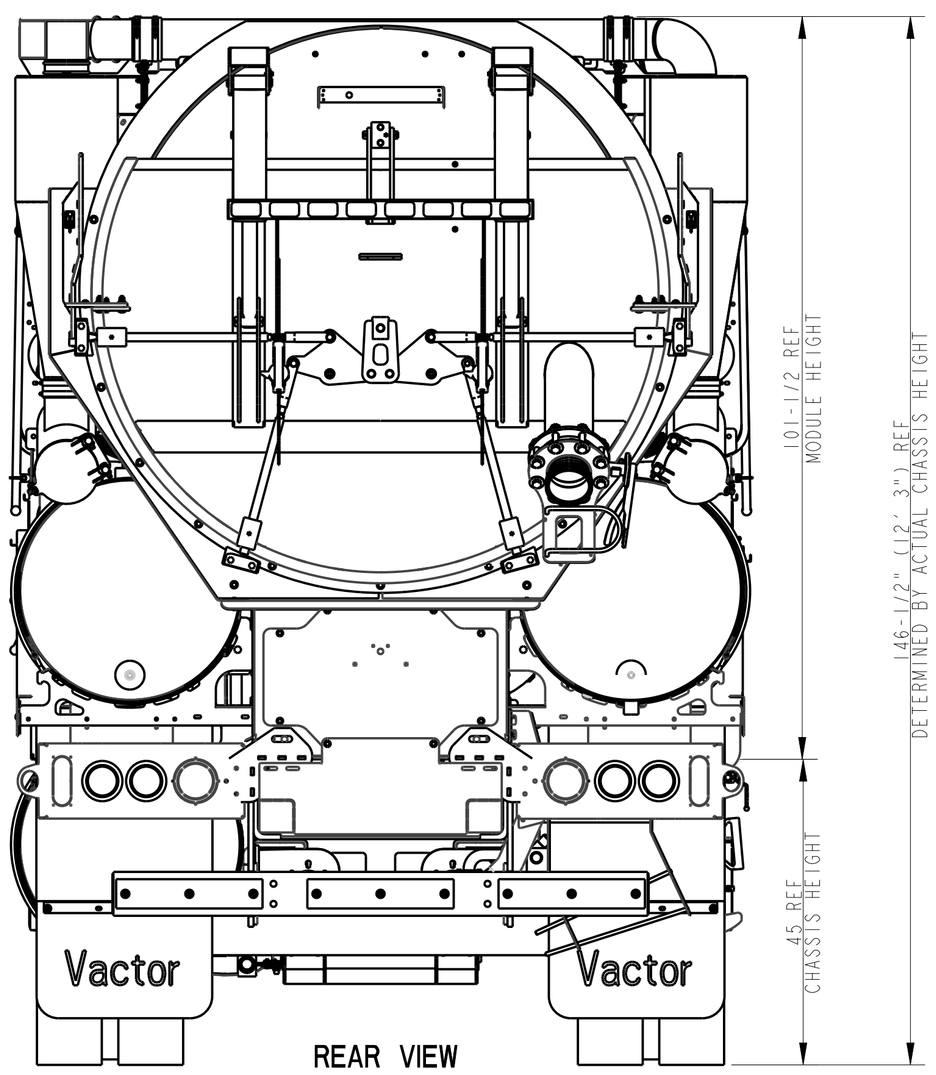

REAR VIEW

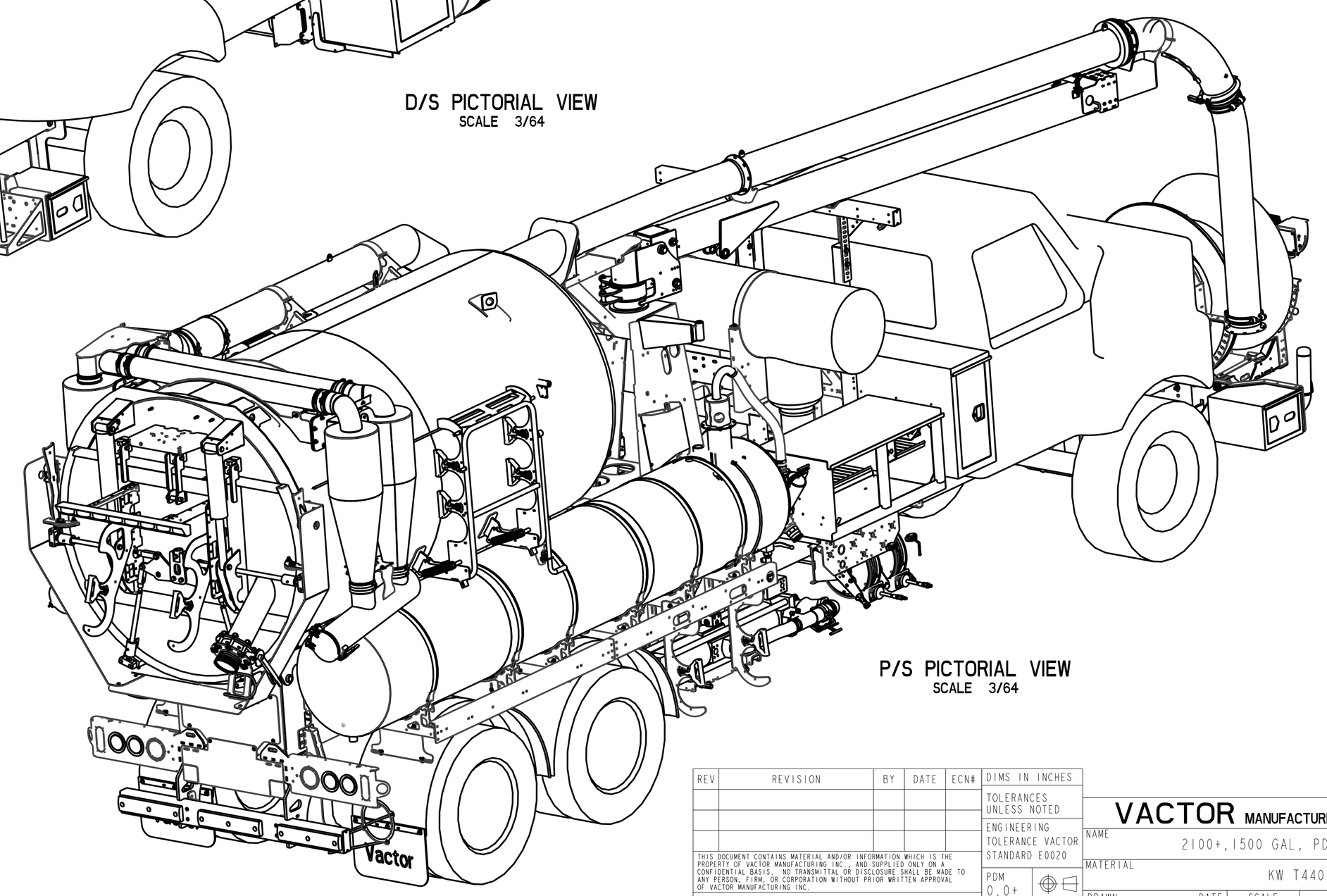

P/S PICTORIAL VIEW
SCALE 3/64

REV	REVISION	BY	DATE	ECN#

THIS DOCUMENT CONTAINS MATERIAL AND/OR INFORMATION WHICH IS THE PROPERTY OF VACTOR MANUFACTURING INC., AND SUPPLIED ONLY ON A CONFIDENTIAL BASIS. NO TRANSMITTAL OR DISCLOSURE SHALL BE MADE TO ANY PERSON, FIRM, OR CORPORATION WITHOUT PRIOR WRITTEN APPROVAL OF VACTOR MANUFACTURING INC.

THE MASTER COPY OF THIS DOCUMENT RESIDES IN ELECTRONIC FORMAT. ALL PRINTED COPIES OF THIS DOCUMENT ARE **UNCONTROLLED**

DIMS IN INCHES
TOLERANCES UNLESS NOTED
ENGINEERING TOLERANCE VACTOR STANDARD E0020
PDM 0.0+
SHEET 2 OF 2

VACTOR MANUFACTURING INC. STREATOR, IL

NAME: 2100+,1500 GAL, PD, 12 YD

MATERIAL: KW T440

DRAWN	DATE	SCALE	SIZE	PART NO	REV
JLM	4/8/16	1/16	D	SD1077	0

VACTOR 2100

WARNING
WARNING

WARNING

Pendant
Plug Socket