CAFE @ NORTH ELEVATION

SCALE: 1/8" = 1'-0"

CAFE @ WEST ELEVATION

SCALE: 1/8" = 1'-0"

ENLARGED ELEVATIONS

Oak Park Mixed-use Seniors

COMMON:JOBS:204024.01 MLK-Broadway:0.5 ArchiCAD:204024 PLNs:204024-Solo Model-07.27.10.plnPrinted Thursday,
August 12, 2010 1:54 PM

SECTION

SCALE: 1/8" = 1'-0"

BUILDING SECTION

Oak Park Mixed-use Seniors

COMMON:JOBS:204024.01 MLK-Broadway:0.5 ArchiCAD:204024 PLNs:204024-Solo Model-07.27.10.plnPrinted Thursday,
August 12, 2010 1:39 PM

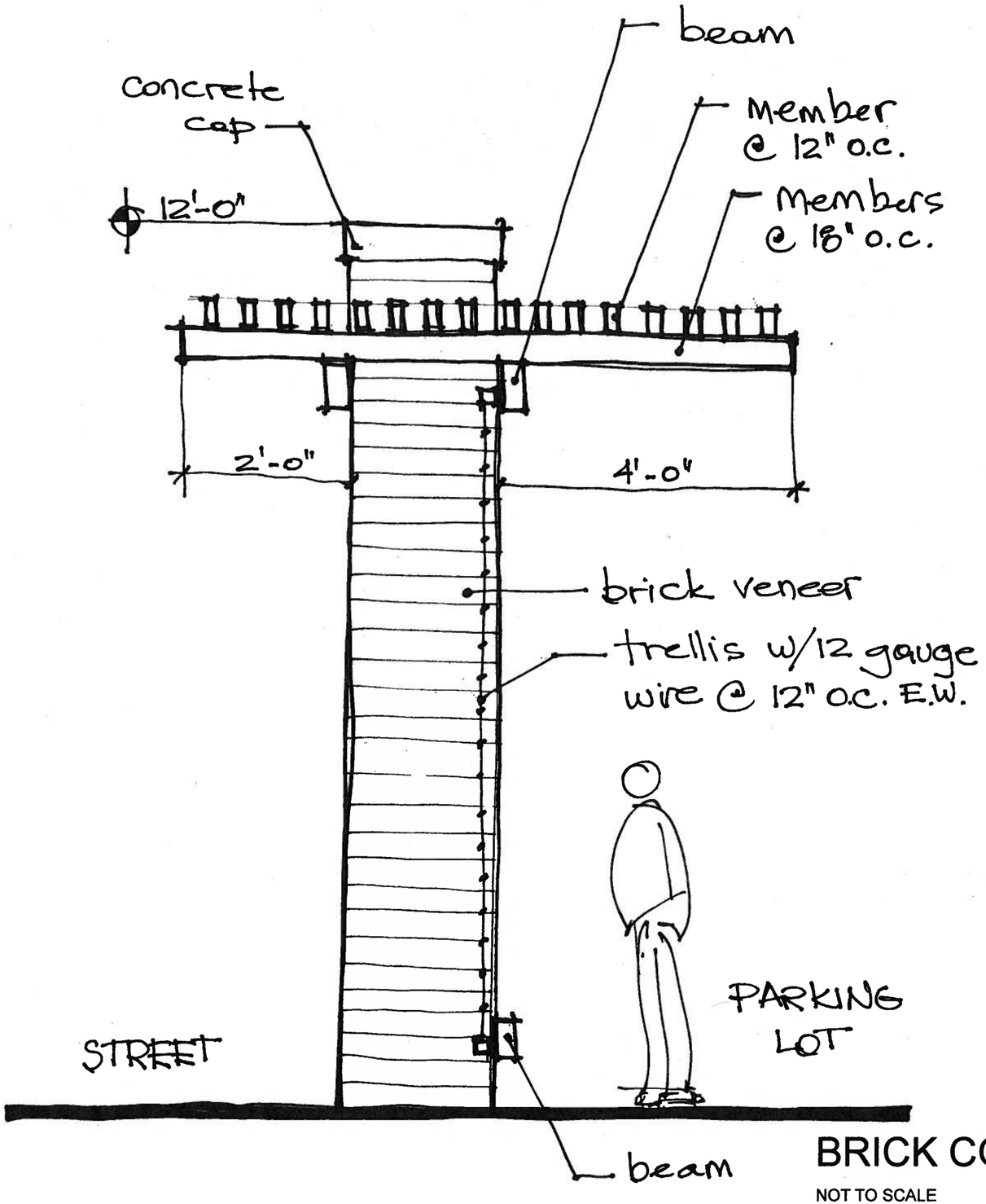

BRICK COLUMN @ PARKING LOT

NOT TO SCALE

BRICK COLUMN DETAIL

Oak Park Mixed-use Seniors

COMMON:JOBS:204024.01 MLK-Broadway:0.5 ArchiCAD:204024 PLNs:204024-Solo Model-08.12.10.plnPrinted Tuesday, August 17, 2010 1:53 PM

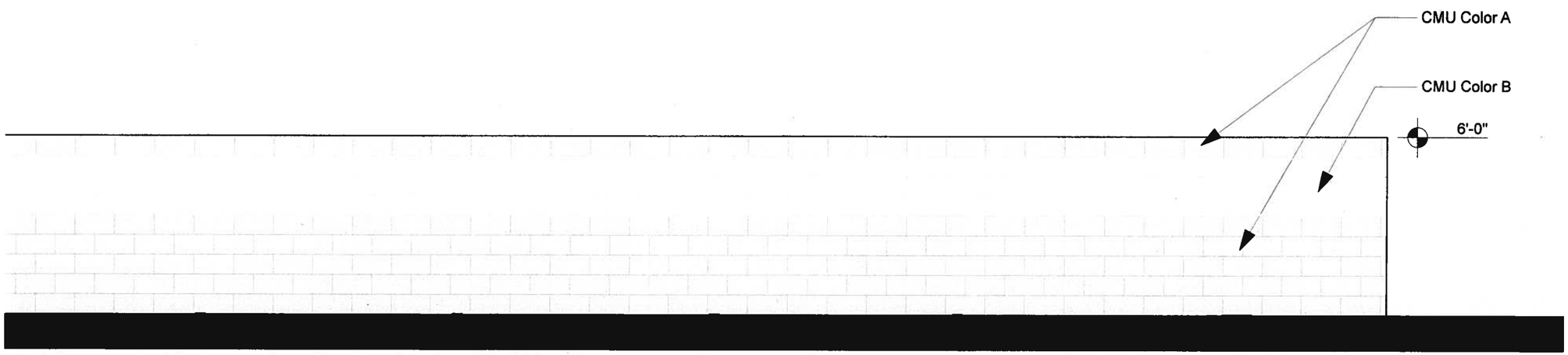

CMU WALL - PATTERN DETAIL

SCALE: 1/4" = 1'-0"

COMMON:JOBS:204024.01 MLK-Broadway:0.5 ArchiCAD:204024 PLNs:204024-Solo Model-08.12.10.plnPrinted Thursday,
August 12, 2010 3:03 PM

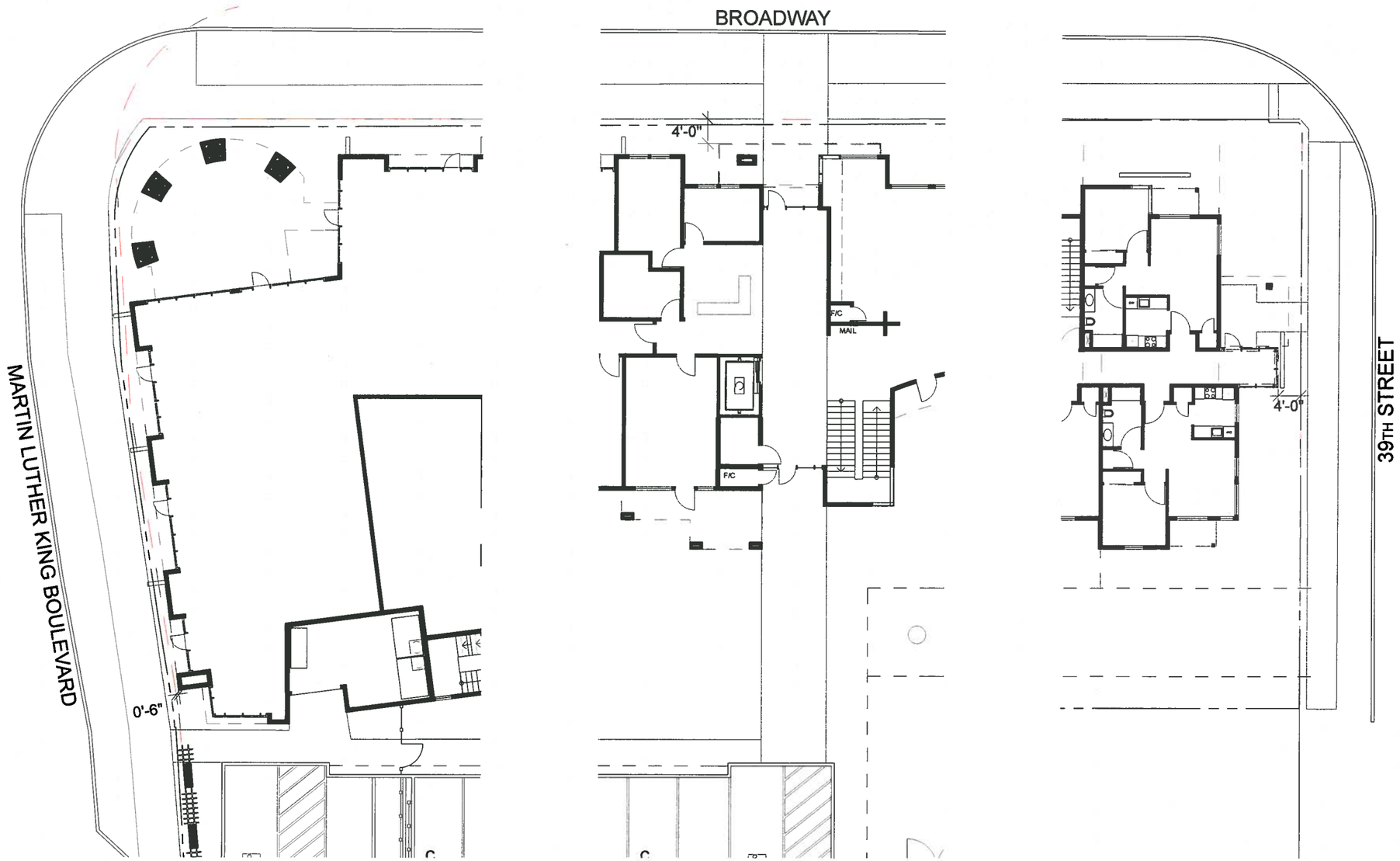

BUILDING SETBACKS

SCALE: 1" = 20'

COMMON:JOBS:204024.01 MLK-Broadway:0.5 ArchiCAD:204024 PLNs:204024-Solo Model-08.12.10.pln Printed Tuesday, August 17, 2010 11:38 AM

BUILDING SETBACKS

Oak Park Mixed-use Seniors

LARGE TRIM PROFILE

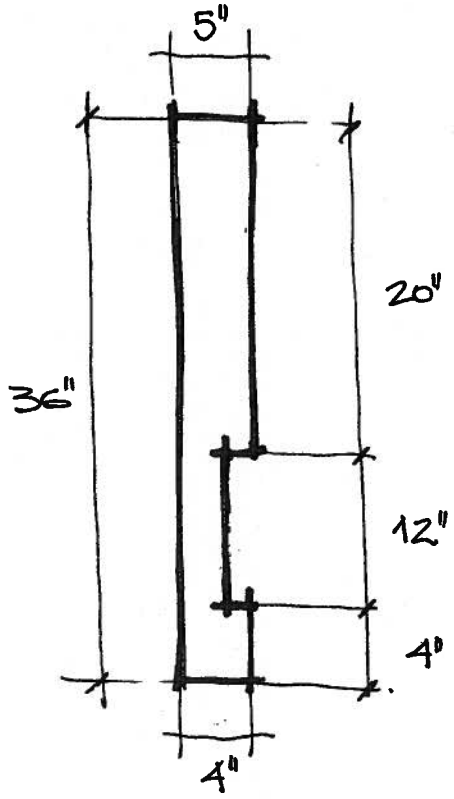

EXT.

MEDIUM TRIM PROFILE

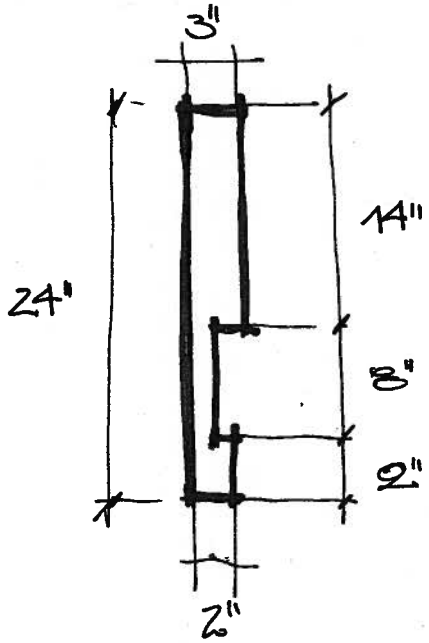

EXT.

TRIM PROFILE DETAILS

NOT TO SCALE

TRIM PROFILES

Oak Park Mixed-use Seniors